2-2377477-1 ✔ ACTIVE

AMP | Heavy Duty Sealed Connector Series

TE Internal #: 2-2377477-1

Vertical, Wire-to-Board, 6 Position, 2 Row, 4mm [.157in] Centerline, Silver (Ag), Sealable, Printed Circuit Board, Heavy Duty Sealed Connector Series

View on TE.com >

Automotive Parts > Automotive Connectors > Automotive Headers > Heavy Duty Sealed Connector Headers

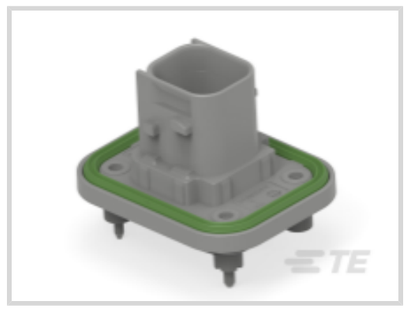
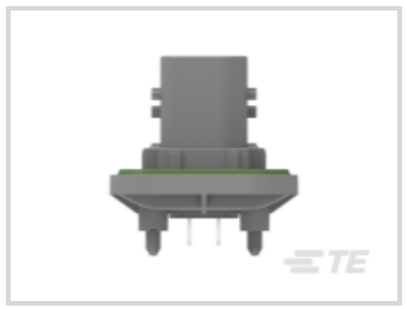

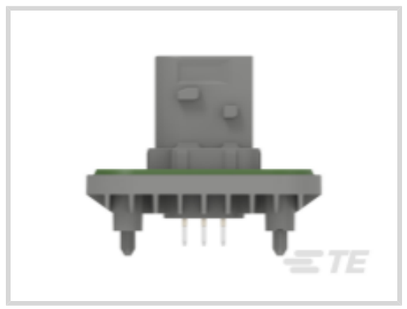
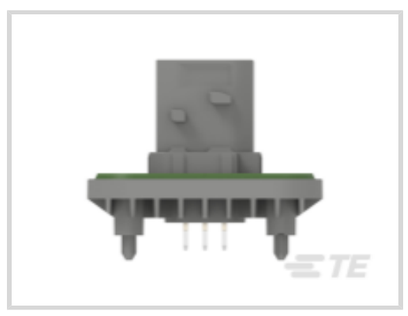

PCB Mount Orientation: **Vertical**

Contact Current Rating (Max): **10 A**

Termination Method to PCB: **Through Hole - Solder**

Sealable: **Yes**

Centerline (Pitch): **4 mm [.157 in]**

All Heavy Duty Sealed Connector Headers (23)

Features

Product Type Features

Header Type	Fully Shrouded
Connector Product Type	Connector Assembly
Sealable	Yes
Connector System	Wire-to-Board
Connector & Contact Terminates To	Printed Circuit Board

Configuration Features

PCB Mount Orientation	Vertical
Number of Positions	6
Number of Rows	2

Body Features

Connector & Keying Code	B
Primary Product Color	Gray

Contact Features

Contact Type	Tab
Contact Current Rating (Max)	10 A
Contact Mating Area Plating Material	Silver (Ag)

Termination Features

Termination Method to PCB	Through Hole - Solder

Mechanical Attachment

Mating Alignment	With
PCB Mount Alignment	With
PCB Mount Retention	With
Connector Mounting Type	Board Mount

Housing Features

Centerline (Pitch)	4 mm[.157 in]

Usage Conditions

Operating Temperature Range	-40 – 140 °C[-40 – 284 °F]

Operation/Application

Circuit Application	Power

Industry Standards

UL Flammability Rating	UL 94V-0

Packaging Features

Packaging Method	Package
Packaging Quantity	1

Product Compliance

For compliance documentation, visit the product page on TE.com>

EU RoHS Directive 2011/65/EU	Compliant
EU ELV Directive 2000/53/EC	Compliant
China RoHS 2 Directive MIIT Order No 32, 2016	有害物质含量符合标准要求 No Restricted Substance(s) Above Threshold
EU REACH Regulation (EC) No. 1907/2006	Current ECHA Candidate List: JUNE 2025 (250) Candidate List Declared Against: JUNE 2025 (250) Does not contain REACH SVHC

Halogen Content	Not Low Halogen - contains Br or Cl > 900 ppm.
Solder Process Capability	Not reviewed for solder process capability

Product Compliance Disclaimer

This information is provided based on reasonable inquiry of our suppliers and represents our current actual knowledge based on the information they provided. This information is subject to change. The part numbers that TE has identified as EU RoHS compliant have a maximum concentration of 0.1% by weight in homogenous materials for lead, hexavalent chromium, mercury, PBB, PBDE, DBP, BBP, DEHP, DIBP, and 0.01% for cadmium, or qualify for an exemption to these limits as defined in the Annexes of Directive 2011/65/EU (RoHS2). Finished electrical and electronic equipment products will be CE marked as required by Directive 2011/65/EU. Components may not be CE marked. Additionally, the part numbers that TE has identified as EU ELV compliant have a maximum concentration of 0.1% by weight in homogenous materials for lead, hexavalent chromium, and mercury, and 0.01% for cadmium, or qualify for an exemption to these limits as defined in the Annexes of Directive 2000/53/EC (ELV). Regarding the REACH Regulation, the information TE provides on SVHC in articles for this part number is based on the latest European Chemicals Agency (ECHA) 'Guidance on requirements for substances in articles' posted at this URL: https://echa.europa.eu/guidance-documents/guidance-on-reach

Compatible Parts



TE Part # 2112291-1
PROTECTION CAP,GROUP B,ASSY



TE Part # 2-1418469-1
6POS,AMP MCP1.5K,REC. HSG, COD

Also in the Series | Heavy Duty Sealed Connector Series



Automotive Headers(23)



Automotive Housings(221)



Automotive Seals & Cavity Plugs(4)



Connector Seals & Cavity Plugs(4)

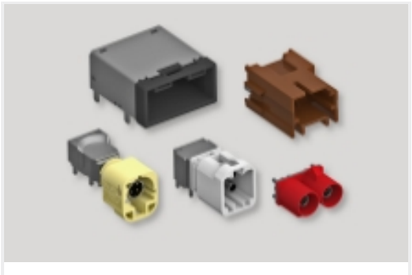

Data Connectivity Headers(12)

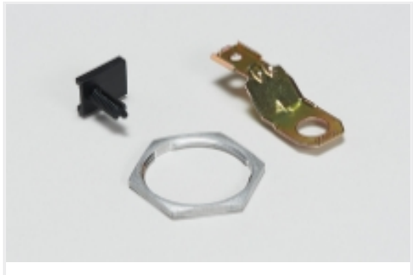

Other Automotive Connector Accessories(39)

Customers Also Bought



TE Part #1-1418437-1
6POS,AMP MCP2.8,REC HSG,ASSY, SEALED



TE Part #1-1563878-1
15POS, MIXED,REC HSG,SEALED,AS



TE Part #1-1703843-2
2POS,1.6X0.6,TAB HSG ASSY,SLD, COD A

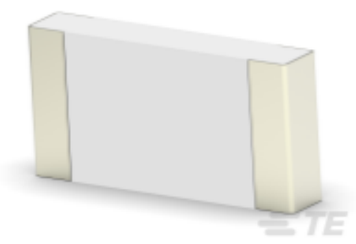

TE Part #2176245-4
CRGS1206 5% 1R8

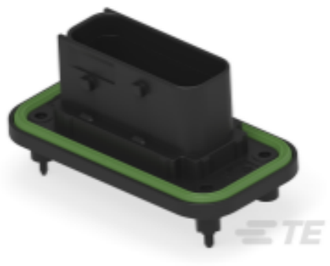

TE Part #CAT-J4A-HDSCH
Heavy Duty Sealed Connector Headers

TE Part #1718969-1
LOCKING PLATE

Documents

Product Drawings

6POS,TAB1.5X0.64,HDR ASSY,180DEG,COD B

English

CAD Files

Customer View Model

ENG_CVM_CVM_2-2377477-1_B.3d_igs.zip

English

Customer View Model

ENG_CVM_CVM_2-2377477-1_B.2d_dxf.zip

English

Customer View Model

ENG_CVM_CVM_2-2377477-1_B.3d_stp.zip

English

3D PDF

3D

By downloading the CAD file I accept and agree to the Terms and Conditions of use.

Product Specifications

Application Specification

English