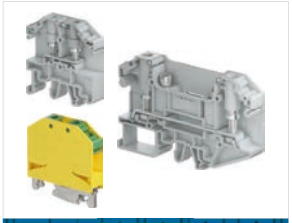

RGW RING LUG TERMINAL BLOCKS

Stud technology

ENTRELEC Terminal Blocks

RGW Ring lug terminal blocks
Stud technology

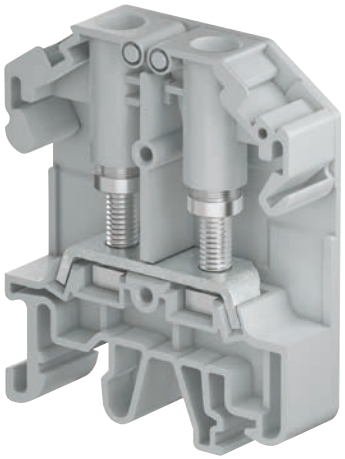

Fast and secured wiring for ring lugs

The RGW terminal blocks offer a combination of fast and secured wiring.Thanks to its exceptional design, the nuts are captive in a pivoting wing and provide a convenient wiring of ring lugs.

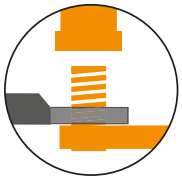

RoHS

Speed up your processes
Fast ring lug connection

- 45% faster than open style terminal blocks thanks to captive and ready to tighten nuts
- No need to remove the nuts for the first use
- Easy 3 steps wiring.

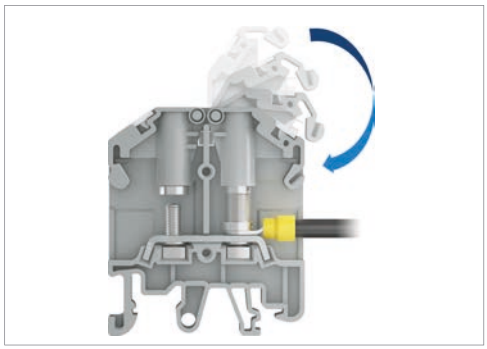

Security and protection
Secured wiring

- 100% captive wire connection: optimal combination of stud, safety wings, captive nut and ring lug
- Self-locking wings to prevent sudden opening
- Touch proof design.

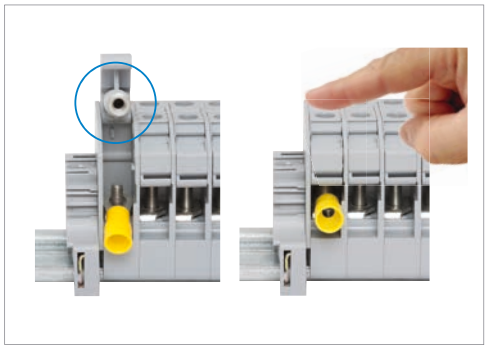

Improve installation efficiency
Convenient installation

- 15% more compact: save space on the DIN Rail versus open style terminal blocks
- Universal foot for mounting on symmetrical and asymmetrical DIN Rails.

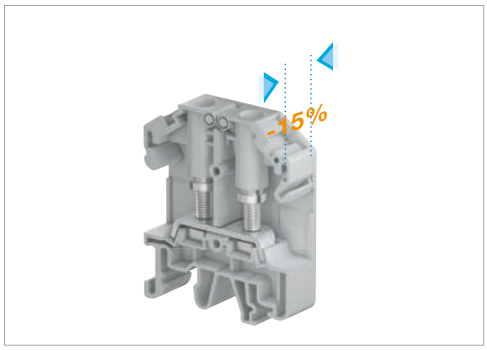

1SNC168020S0201

Features

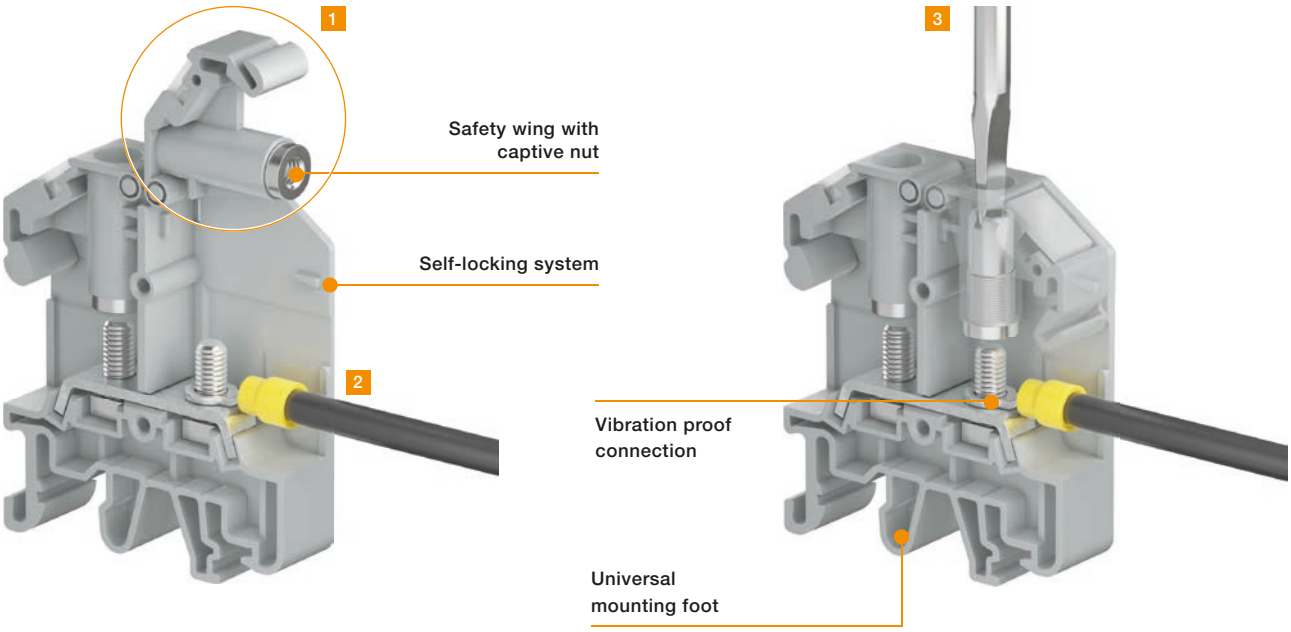

Easy 3 step wiring:

1 Open the safety wing - 2 Hook the wire on the stud and close the wing - 3 Screw down the nut

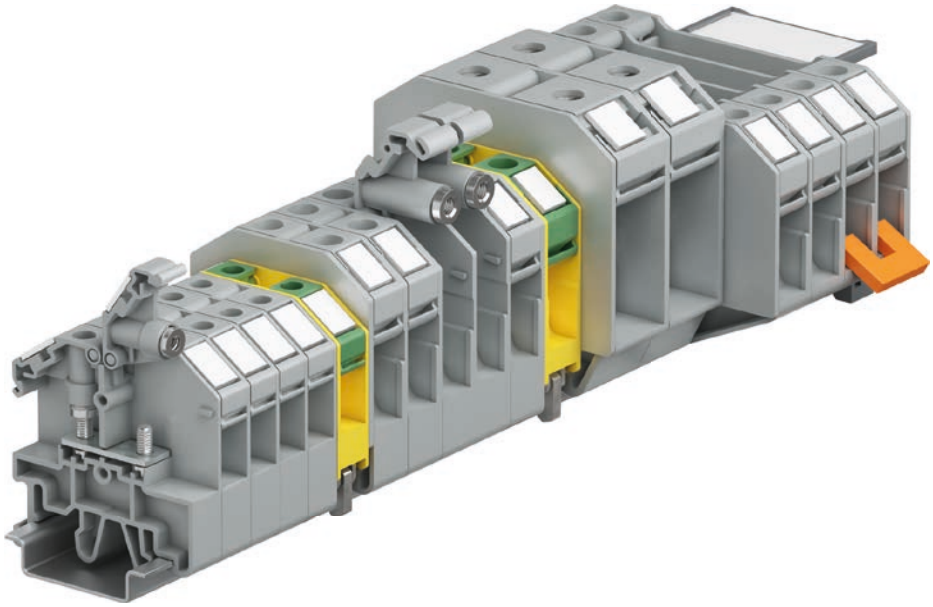

1SNC168021S0201

2.5 mm² 14 AWG

Feed-through

Feed-through
with test sockets

Ground

6 mm² 10 AWG

Feed-through

Feed-through
with test sockets

Ground

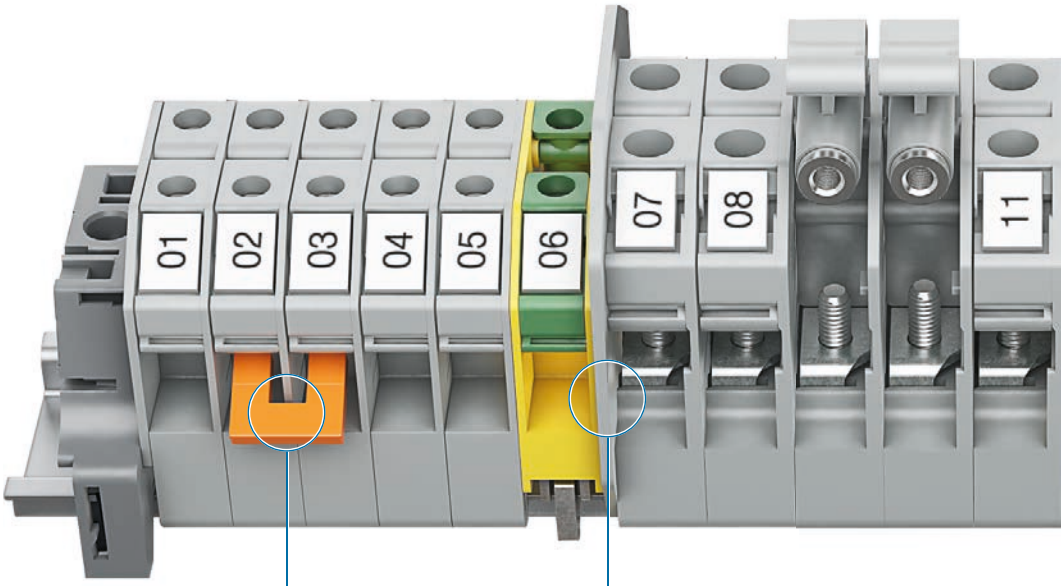

Jumper bars
from 2 to 10 poles

Convenient circuit separator
circuit & voltage separation

25 mm² 4 AWG
Feed-through

6 mm² 10 AWG
Feed-through with test sockets
Disconnect with sliding link

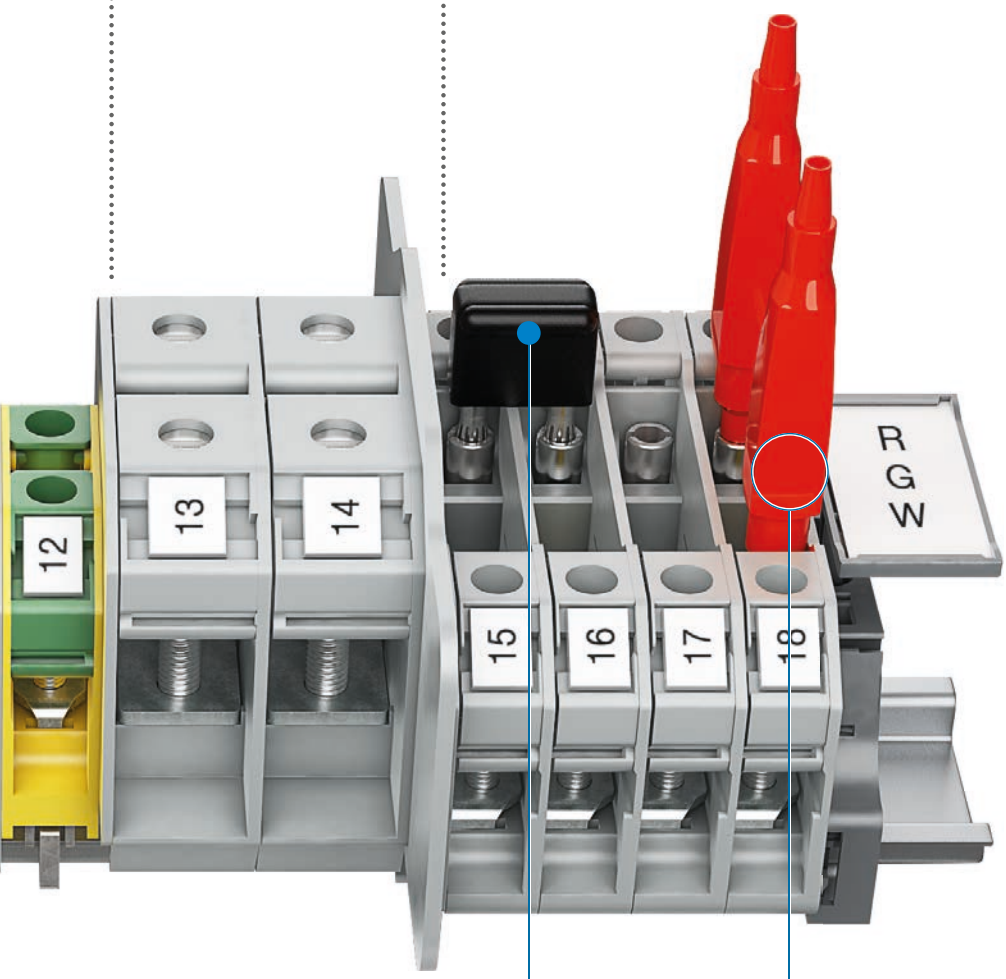

Easy CT short circuiting
with short-circuit plug

Convenient testing
test sockets compatible with
DIA 4 mm test plugs

Qualified for worldwide markets, applications and for severe environments: vibration, shock...

Industry

Ring lug technology is a long time approved technology in the industry (i.e semi conductor production line) for it's proven reliability. The 100% captive connection secures the wiring.

Utility

Thanks to a 100% captive connection our RGW terminal blocks are well adapted to the power, medium and low voltage switchgear panels where a full secured connection is required.

HVAC

RGW terminal blocks are well adapted to HVAC application requesting ring lug terminals providing at the same time a vibration proof connection and increased productivity.

RoHS

1SNC168023S0201

Railway

Rail vehicles are subjected to extreme environmental conditions. RGW terminal blocks are part of the ENTRELEC railway terminal blocks offering, the largest of the market. RGW terminal blocks are tested in accordance with the latest and most demanding standards applying to rolling stock applications.

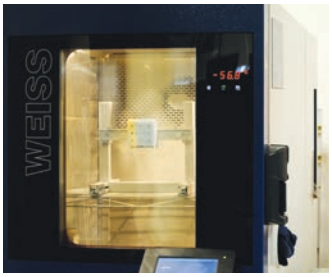

IEC 61373 Railway applications – Rolling stock equipment – Shock and vibration tests
RGW terminal blocks are complying with **category 1 (body mounted) class B.**

EN 45545-2 Railway applications. Fire protection on railway vehicles. Requirements for fire behavior of materials and components
RGW terminal blocks plastic materials are rated **HL3 R22 (the highest Hazard level)**.
They can be used on vehicles for subway, tube, sleeping and couchette.

NF F 16-101 Directive relative to selecting materials in relation to their fire resistance in terms of its behavior in a fire, the opacity of smoke and the toxicity of the gas released.

NF F 16-102 Complement to NF F 16-101. The purpose of this standard is to specify the application of NF F 16-101 to electrical equipment and especially to individual apparatus.
RGW terminal blocks plastic materials are rated **I2F2. Level 3.** This level concern products mounted inside a room for passengers or running crew.

IEC 60068-2.1/IEC 60068-2.2/IEC 60068-2.78/IEC 60068-2.30 : Environmental test
RGW terminal blocks have successfully passed the damp heat, dry heat, cold climatic test.

UL94 (North America) Standard for Safety of Flammability of Plastic Materials for Parts in Devices and Appliances testing
RGW terminal blocks plastic materials are rated **UL94 V0.**

1SNC168034S0201

RGW2.5 Ring lug terminal blocks
Feed-through - 9 mm 0.354 in spacing

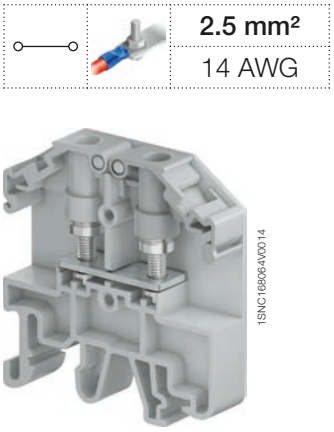

2.5 mm²
14 AWG

1SNC168064V0014

RGW2.5

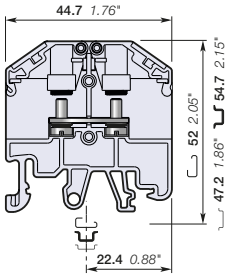

9 mm 0.354 in spacing

Description

- Stud terminal block for ring lug connection,
- Integrated captive nuts in protective wings provide easy and secured connection,
- Universal mounting on symmetrical and asymmetrical rails.

Ordering details

Description		Color	Type	Part Numbers		Pkg qty	Weight (1 pce) g
Feed-through	With 2 studs M3 and captive nuts in wings	Grey	RGW2.5-V0	1SNA510003R0000		45	11.78

Main technical data

		IEC	UL	CSA
Lugs	Rigid: Solid/Stranded	0.1 ... 2.5 mm²	26 ... 14 AWG	26 ... 14 AWG
	Flexible with insulated ferrule	0.1 ... 2.5 mm²		
	Gauge			
Rated current		24 A	15 A	20 A
Maximum current			20 A	
Rated cross section		2.5 mm²	14 AWG	14 AWG
Rated short-time withstand current (1s)		300 A		
Rated voltage		800 V	600 V	600 V
Impulse withstand voltage		8000 V		
Protection		IP10	NEMA 1	

Mounting instructions

Rail	G32, TH 35-7.5, TH 35-15
Nuts Tool	Flat screwdriver Ø 4 mm Ø 0.157 in
Torque	0.6 ... 0.8 N.m 5.3 ... 7.1 lb.in
Max width of lug	7 mm 0.28 in

The connecting capacity data for one Rigid: Solid/Stranded, or one Flexible conductor (when applicable) is a mandatory information required by IEC, UL and CSA standards (Copper conductors). All other data are provided as supplementary information only. For more details, please consult our CB, UL or CSA certificates and technical datasheet available on http://www.TE.com

CE RoHS USR CNR CSA

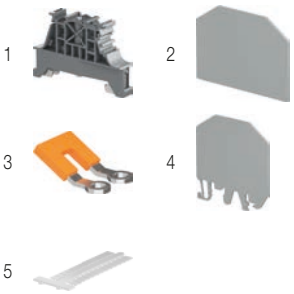

Accessories

	Description			Color	Type	Part Numbers		Pkg qty	Weight (1 pce) g
1	**End stops**	10 mm	0.394 in	Dark grey	BAM4	1SNK900001R0000		50	14.00
2	**End sections**	1.2 mm	0.047 in	Grey	E-RGW2.5	1SNA519003R0000		25	1.89
3	**Lateral jumper bars**	2 poles	24 A (IEC)	Orange	PC-RG2.5-2	1SNA519103R0200		25	3.02
		3 poles	24 A (IEC)		PC-RG2.5-3	1SNA519103R0300		20	4.69
		4 poles	24 A (IEC)		PC-RG2.5-4	1SNA519103R0400		15	6.36
		10 poles	24 A (IEC)		PC-RG2.5-10	1SNA519103R1000		5	16.39
4	**Circuit separators**	1.5 mm	0.059 in	Grey	CS-RGW-S	1SNA519200R0000		25	4.59
5	**Terminal block markers**	Blank marker		White	M-W610PC	1SNA235511R0600		360	8.03
					MG-CPM-01 41090	1SNB041090R0510		1960	0.351

Complete list of accessories is indicated in the terminal block datasheet including end stops.
Some accessories such as jumper bars may modify the terminal block's ratings: Complete information available in the accessories section of the catalog.

Ground Ring lug terminal blocks

Description		Color	Type	Part Numbers		Pkg qty	Weight (1 pce) g
Ground	With 2 studs M3 and captive nuts in wings	Green-yellow	RGW2.5-PE-V0	1SNA511003R0500		45	28.56

1SNC168024S0201

Technical data valid for copper conductors only.

RGW2.5-T Ring lug terminal blocks

Feed-through with test sockets - 9 mm 0.354 in spacing

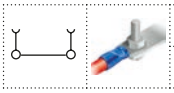

2.5 mm²
14 AWG

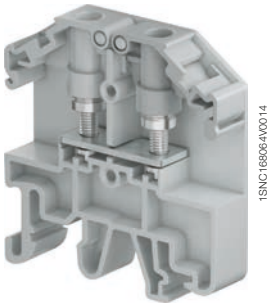

RGW2.5-T

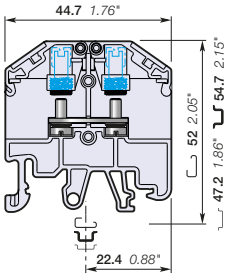

9 mm 0.354 in spacing

Description

- Stud terminal block for ring lug connection,
- Integrated captive nuts in protective wings provide easy and secured connection,
- Ease your test operations with the 2 built-in nuts with test sockets compatible with DIA 2 mm 0.079 in,
- Universal mounting on symmetrical and asymmetrical rails.

Ordering details

Description		Color	Type	Part Number		Pkg qty	Weight (1 pce) g
Feed-through	With 2 studs M3 and captive nuts in wings	Grey	RGW2.5-T-V0	1SNA510103R0000		45	11.58

Main technical data

		IEC	UL	CSA
Lugs	Rigid: Solid/Stranded	0.1 ... 2.5 mm²	26 ... 14 AWG	26 ... 14 AWG
	Flexible with insulated ferrule	0.1 ... 2.5 mm²		
	Gauge			
Rated current		24 A	15 A	20 A
Maximum current			20 A	
Rated cross section		2.5 mm²	14 AWG	14 AWG
Rated short-time withstand current (1s)		300 A		
Rated voltage		800 V	600 V	600 V
Impulse withstand voltage		8000 V		
Protection		IP10	NEMA 1	

Mounting instructions

Rail	G32, TH 35-7.5, TH 35-15
Nuts Tool	Flat screwdriver Ø 4 mm Ø 0.157 in
Torque	0.6 ... 0.8 N.m 5.3 ... 7.1 lb.in
Max width of lug	7 mm 0.28 in

The connecting capacity data for one Rigid: Solid/Stranded, or one Flexible conductor (when applicable) is a mandatory information required by IEC, UL and CSA standards (Copper conductors). All other data are provided as supplementary information only. For more details, please consult our CB, UL or CSA certificates and technical datasheet available on http://www.TE.com

CE RoHS USR CNR CSA

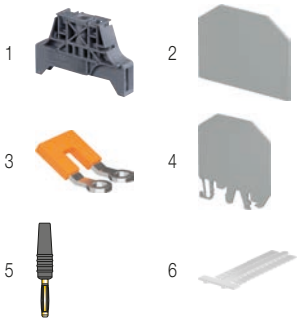

Accessories

	Description			Color	Type	Part Number		Pkg qty	Weight (1 pce) g
1	**End stops**	10 mm	0.394 in	Dark grey	BAM4	1SNK900001R0000		50	14.00
2	**End sections**	1.2 mm	0.047 in	Grey	E-RGW2.5	1SNA519003R0000		25	1.89
3	**Lateral jumper bars**	2 poles	24 A (IEC)	Orange	PC-RG2.5-2	1SNA519103R0200		25	3.02
		3 poles	24 A (IEC)		PC-RG2.5-3	1SNA519103R0300		20	4.69
		4 poles	24 A (IEC)		PC-RG2.5-4	1SNA519103R0400		15	6.36
		10 poles	24 A (IEC)		PC-RG2.5-10	1SNA519103R1000		5	16.39
4	**Circuit separators**	1.5 mm	0.059 in	Grey	CS-RGW-S	1SNA519200R0000		25	4.59
5	**Test plugs**	DIA 2 mm 0.079 in		Black	FC2.MC	1SNA107239R0300		20	1.00
6	**Terminal block markers**	Blank marker		White	M-W610PC	1SNA235511R0600		360	8.03
					MG-CPM-01 41090	1SNB041090R0510		1960	0.351

Complete list of accessories is indicated in the terminal block datasheet including end stops.
Some accessories such as jumper bars may modify the terminal block's ratings: Complete information available in the accessories section of the catalog.

Ground Ring lug terminal blocks

Description		Color	Type	Part Number		Pkg qty	Weight (1 pce) g
Ground	With 2 studs M3 and captive nuts in wings	Green-yellow	RGW2.5-PE-V0	1SNA511003R0500		45	28.56

1SNC168025S0201

Technical data valid for copper conductors only.

RGW6 Ring lug terminal blocks

Feed-through - 11 mm 0.433 in spacing

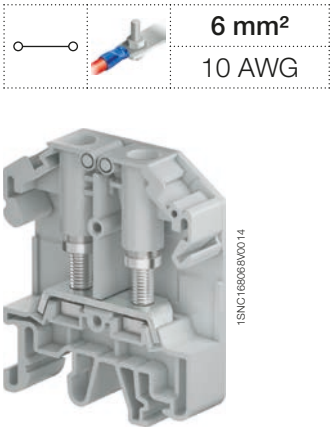

RGW6

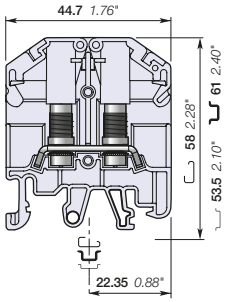

11 mm 0.433 in spacing

6 mm²
10 AWG

Description

- Stud terminal block for ring lug connection,
- Integrated captive nuts in protective wings provide easy and secured connection,
- Universal mounting on symmetrical and asymmetrical rails.

Ordering details

Description		Color	Type	Part Numbers		Pkg qty	Weight (1 pce) g
Feed-through	With 2 studs M4 and captive nuts in wings	Grey	RGW6-V0	1SNA510024R0000		40	19.76

Main technical data

		IEC	UL	CSA
Lugs	Rigid: Solid/Stranded	0.1 ... 6 mm²	22 ... 10 AWG	22 ... 10 AWG
	Flexible with insulated ferrule	0.1 ... 6 mm²		
	Gauge			
Rated current		41 A	30 A	30 A
Maximum current			30 A	
Rated cross section		6 mm²	10 AWG	10 AWG
Rated short-time withstand current (1s)		720 A		
Rated voltage		800 V	600 V	600 V
Impulse withstand voltage		8000 V		
Protection		IP10	NEMA 1	

Mounting instructions

Rail	G32, TH 35-7.5, TH 35-15
Nuts	Flat screwdriver
Tool	Ø 5.5 mm Ø 0.217 in
Torque	0.8 ... 1.2 N.m 7.1 ... 10.6 lb.in
Max width of lug	9.4 mm 0.37 in

The connecting capacity data for one Rigid: Solid/Stranded, or one Flexible conductor (when applicable) is a mandatory information required by IEC, UL and CSA standards (Copper conductors). All other data are provided as supplementary information only. For more details, please consult our CB, UL or CSA certificates and technical datasheet available on http://www.TE.com

CE RoHS USR CNR CSA

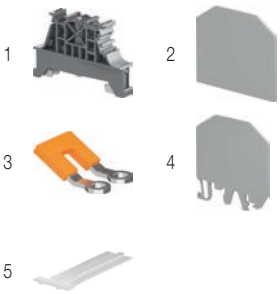

Accessories

	Description			Color	Type	Part Numbers		Pkg qty	Weight (1 pce) g
1	**End stops**	10 mm	0.394 in	Dark grey	BAM4	1SNK900001R0000		50	14.00
2	**End sections**	1.4 mm	0.055 in	Grey	E-RGW6	1SNA519004R0000		50	2.65
3	**Lateral jumper bars**	2 poles	41 A (IEC)	Orange	PC-RG6-2	1SNA519104R0200		25	3.44
		3 poles	41 A (IEC)		PC-RG6-3	1SNA519104R0300		20	5.40
		4 poles	41 A (IEC)		PC-RG6-4	1SNA519104R0400		15	7.33
		7 poles	41 A (IEC)		PC-RG6-7	1SNA519104R0700		5	13.24
		10 poles	41 A (IEC)		PC-RG6-10	1SNA519104R1000		5	19.05
4	**Circuit separators**	1.5 mm	0.059 in	Grey	CS-RGW-S	1SNA519200R0000		25	4.59
5	**Terminal block markers**	Blank marker		White	M-W810PC	1SNA235510R0800		260	0.27
					MG-CPM-01 41096	1SNB041096R0810		1120	0.400

Complete list of accessories is indicated in the terminal block datasheet including end stops.
Some accessories such as jumper bars may modify the terminal block's ratings: Complete information available in the accessories section of the catalog.

Ground Ring lug terminal blocks

Description		Color	Type	Part Numbers		Pkg qty	Weight (1 pce) g
Ground	With 2 studs M4 and captive nuts in wings	Green-yellow	RGW6-PE-V0	1SNA511024R0500		40	31.76

Technical data valid for copper conductors only.

1SNC168016S0201

RGW6-T Ring lug terminal blocks

Feed-through with test sockets - 11 mm 0.433 in spacing

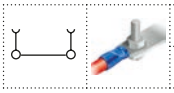

6 mm²
10 AWG

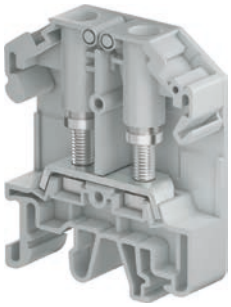

RGW6-T

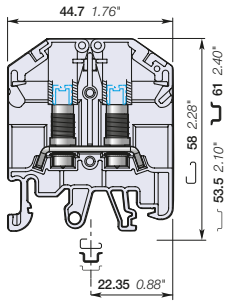

11 mm 0.433 in spacing

Description

- Stud terminal block for ring lug connection,
- Integrated captive nuts in protective wings provide easy and secured connection,
- Ease your test operations with the 2 built-in nuts with test sockets compatible with DIA 4 mm 0.157 in,
- Universal mounting on symmetrical and asymmetrical rails.

Ordering details

Description		Color	Type	Part Number		Pkg qty	Weight (1 pce) g
Feed-through	With 2 studs M4 and captive nuts in wings	Grey	RGW6-T-V0	1SNA510124R0000		40	19.04

Main technical data

		IEC	UL	CSA
Lugs	Rigid: Solid/Stranded	0.1 ... 6 mm²	22 ... 10 AWG	22 ... 10 AWG
	Flexible with insulated ferrule	0.1 ... 6 mm²		
	Gauge			
Rated current		41 A	30 A	30 A
Maximum current			30 A	
Rated cross section		6 mm²	10 AWG	10 AWG
Rated short-time withstand current (1s)		720 A		
Rated voltage		800 V	600 V	600 V
Impulse withstand voltage		8000 V		
Protection		IP10	NEMA 1	

Mounting instructions

Rail	G32, TH 35-7.5, TH 35-15
Nuts Tool	Flat screwdriver Ø 5.5 mm Ø 0.217 in
Torque	0.8 ... 1.2 N.m 7.1 ... 10.6 lb.in
Max width of lug	9.4 mm 0.37 in

The connecting capacity data for one Rigid: Solid/Stranded, or one Flexible conductor (when applicable) is a mandatory information required by IEC, UL and CSA standards (Copper conductors). All other data are provided as supplementary information only. For more details, please consult our CB, UL or CSA certificates and technical datasheet available on http://www.TE.com

CE RoHS USR CNR CSA

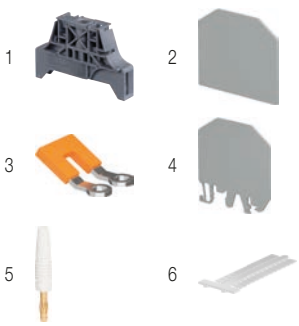

Accessories

	Description			Color	Type	Part Number		Pkg qty	Weight (1 pce) g
1	**End stops**	10 mm	0.394 in	Dark grey	BAM4	1SNK900001R0000		50	14.00
2	**End sections**	1.4 mm	0.055 in	Grey	E-RGW6	1SNA519004R0000		50	2.65
3	**Lateral jumper bars**	2 poles	41 A (IEC)	Orange	PC-RG6-2	1SNA519104R0200		25	3.44
		3 poles	41 A (IEC)		PC-RG6-3	1SNA519104R0300		20	5.40
		4 poles	41 A (IEC)		PC-RG6-4	1SNA519104R0400		15	7.33
		7 poles	41 A (IEC)		PC-RG6-7	1SNA519104R0700		5	13.24
		10 poles	41 A (IEC)		PC-RG6-10	1SNA519104R1000		5	19.05
4	**Circuit separators**	1.5 mm	0.059 in	Grey	CS-RGW-S	1SNA519200R0000		25	4.59
5	**Test plugs**	DIA 4 mm 0.157 in		White	FC4	1SNA167860R0100		10	10.00
6	**Terminal block markers**	Blank marker		White	M-W810PC	1SNA235510R0800		260	0.27
					MG-CPM-01 41096	1SNB041096R0810		1120	0.400

Complete list of accessories is indicated in the terminal block datasheet including end stops.
Some accessories such as jumper bars may modify the terminal block's ratings: Complete information available in the accessories section of the catalog.

Ground Ring lug terminal blocks

Description		Color	Type	Part Number		Pkg qty	Weight (1 pce) g
Ground	With 2 studs M4 and captive nuts in wings	Green-yellow	RGW6-PE-V0	1SNA511024R0500		40	31.76

1SNC168019S0201

Technical data valid for copper conductors only.

RGW25-M5 Ring lug terminal blocks

Feed-through - 18 mm 0.709 in spacing

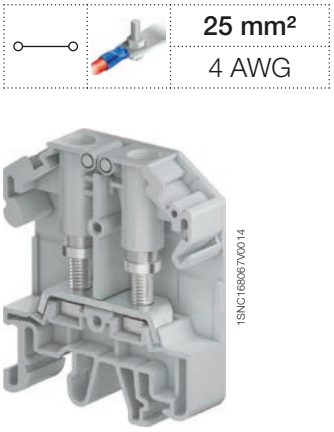

RGW25-M5

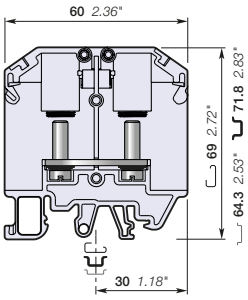

18 mm 0.709 in spacing

25 mm²
4 AWG

Description

- Stud terminal block for ring lug connection,
- Integrated captive nuts in protective wings provide easy and secured connection,
- Universal mounting on symmetrical and asymmetrical rails.

Ordering details

Description		Color	Type	Part Numbers		Pkg qty	Weight (1 pce) g
Feed-through	With 2 studs M5 and captive nuts in wings	Grey	RGW25-M5-V0	1SNA510005R0000		10	49.10

Main technical data

		IEC	UL	CSA
Lugs	Rigid: Solid/Stranded	0.1 ... 25 mm²	26 ... 4 AWG	26 ... 4 AWG
	Flexible with insulated ferrule	0.1 ... 25 mm²		
	Gauge			
Rated current		101 A	85 A	100 A
Maximum current			115 A	
Rated cross section		25 mm²	4 AWG	4 AWG
Rated short-time withstand current (1s)		3000 A		
Rated voltage		800 V	600 V	600 V
Impulse withstand voltage		8000 V		
Protection		IP10	NEMA 1	

Mounting instructions

Rail	G32, TH 35-7.5, TH 35-15
Nuts Tool	Flat screwdriver Ø 5.5 mm Ø 0.217 in
Torque	3 ... 3.5 N.m 26.5 ...31 lb.in
Max width of lug	16.2 mm 0.64 in

The connecting capacity data for one Rigid: Solid/Stranded, or one Flexible conductor (when applicable) is a mandatory information required by IEC, UL and CSA standards (Copper conductors). All other data are provided as supplementary information only. For more details, please consult our CB, UL or CSA certificates and technical datasheet available on http://www.TE.com

CE RoHS USR CNR CSA

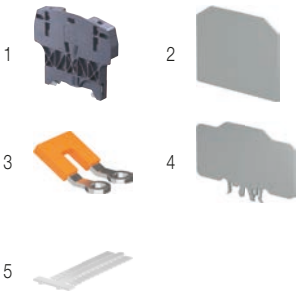

Accessories

	Description			Color	Type	Part Numbers		Pkg qty	Weight (1 pce) g
1	**End stops**	10 mm	0.394 in	Dark grey	BAZH1	1SNK900102R0000		20	24.00
2	**End sections**	1.4 mm	0.055 in	Grey	E-RGW25	1SNA519005R0000		25	0.146
3	**Lateral jumper bars**	2 poles	101 A (IEC)	Orange	PC-RG25-2	1SNA519106R0200		25	8.81
4	**Circuit separators**	2 mm	0.079 in	Grey	CS-RGW-L	1SNA519201R0000		25	13.72
5	**Terminal block markers**	Blank marker		White	M-W1010PC	1SNA235512R1000		200	0.10
					MG-CPM-01 41096	1SNB041096R0810		1120	0.400

Complete list of accessories is indicated in the terminal block datasheet including end stops.
Some accessories such as jumper bars may modify the terminal block's ratings: Complete information available in the accessories section of the catalog.

1SNC168028S0201

Technical data valid for copper conductors only.

RGW25-M6 Ring lug terminal blocks

Feed-through - 18 mm 0.709 in spacing

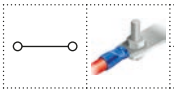

25 mm²
4 AWG

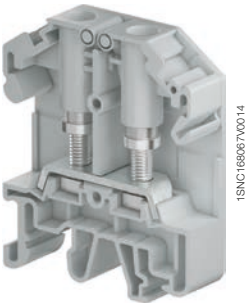

RGW25-M6

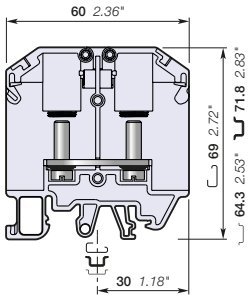

18 mm 0.709 in spacing

Description

- Stud terminal block for ring lug connection,
- Integrated captive nuts in protective wings provide easy and secured connection,
- Universal mounting on symmetrical and asymmetrical rails.

Ordering details

Description		Color	Type	Part Numbers		Pkg qty	Weight (1 pce) g
Feed-through	With 2 studs M6 and captive nuts in wings	Grey	RGW25-M6-V0	1SNA510006R0000		10	48.44

Main technical data

		IEC	UL	CSA
Lugs	Rigid: Solid/Stranded	0.1 ... 25 mm²	26 ... 4 AWG	26 ... 4 AWG
	Flexible with insulated ferrule	0.1 ... 25 mm²		
	Gauge			
Rated current		101 A	85 A	100 A
Maximum current			115 A	
Rated cross section		25 mm²	4 AWG	4 AWG
Rated short-time withstand current (1s)		3000 A		
Rated voltage		800 V	600 V	600 V
Impulse withstand voltage		8000 V		
Protection		IP10	NEMA 1	

Mounting instructions

Rail		G32, TH 35-7.5, TH 35-15
Nuts Tool		Flat screwdriver Ø 5.5 mm Ø 0.217 in
Torque		3.2 ... 3.5 N.m 28.3 ...32.7 lb.in
Max width of lug		16.2 mm 0.64 in

The connecting capacity data for one Rigid: Solid/Stranded, or one Flexible conductor (when applicable) is a mandatory information required by IEC, UL and CSA standards (Copper conductors). All other data are provided as supplementary information only. For more details, please consult our CB, UL or CSA certificates and technical datasheet available on http://www.TE.com

CE RoHS USR CNR CSA

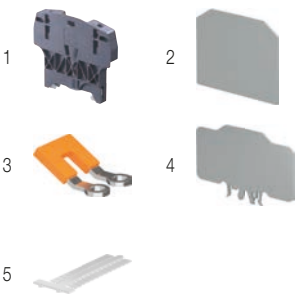

Accessories

	Description			Color	Type	Part Numbers		Pkg qty	Weight (1 pce) g
1	**End stops**	10 mm	0.394 in	Dark grey	BAZH1	1SNK900102R0000		20	24.00
2	**End sections**	1.4 mm	0.055 in	Grey	E-RGW25	1SNA519005R0000		25	0.146
3	**Lateral jumper bars**	2 poles	101 A (IEC)	Orange	PC-RG25-2	1SNA519106R0200		25	8.81
4	**Circuit separators**	2 mm	0.079 in	Grey	CS-RGW-L	1SNA519201R0000		25	13.72
5	**Terminal block markers**	Blank marker		White	M-W1010PC	1SNA235512R1000		200	0.10
					MG-CPM-01 41096	1SNB041096R0810		1120	0.400

Complete list of accessories is indicated in the terminal block datasheet including end stops.
Some accessories such as jumper bars may modify the terminal block's ratings: Complete information available in the accessories section of the catalog.

Technical data valid for copper conductors only.

1SNC168029S0201

RGW2.5-PE Ring lug terminal blocks

Ground - 10 mm 0.394 in spacing

RGW2.5-PE

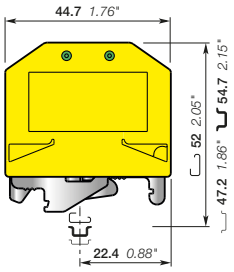

10 mm 0.394 in spacing

2.5 mm²
14 AWG

Description

- Stud terminal block for ring lug connection,
- Integrated captive nuts in protective wings provide easy and secured connection,
- Universal mounting on symmetrical and asymmetrical rails.

Ordering details

Description		Color	Type	Part Number		Pkg qty	Weight (1 pce) g
Ground	With 2 studs M3 and captive nuts in wings	Green-yellow	RGW2.5-PE-V0	1SNA511003R0500		45	28.56

Main technical data

		IEC	UL	CSA
Lugs	Rigid: Solid/Stranded	0.1 ... 2.5 mm²	26 ... 14 AWG	26 ... 14 AWG
	Flexible with insulated ferrule	0.1 ... 2.5 mm²		
	Gauge			
Rated cross section		2.5 mm²	14 AWG	14 AWG
Rated short-time withstand current (1s)		300 A		
Protection		IP10	NEMA 1	

Mounting instructions

Rail		G32, TH 35-7.5, TH 35-15
Nuts Tool		Flat screwdriver Ø 4 mm Ø 0.157 in
Torque		0.6 ... 0.8 N.m 5.3 ... 7.1 lb.in
Rail connection screw Tool		Flat screwdriver Ø 4 mm Ø 0.157 in
Torque		0.5 ... 0.6 N.m 4.4 ... 5.3 lb.in
Max width of lug		7 mm 0.28 in

The connecting capacity data for one Rigid: Solid/Stranded, or one Flexible conductor (when applicable) is a mandatory information required by IEC, UL and CSA standards (Copper conductors). All other data are provided as supplementary information only. For more details, please consult our CB, UL or CSA certificates and technical datasheet available on http://www.TE.com

CE RoHS USR CNR CSA

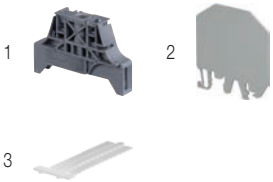

Accessories

	Description			Color	Type	Part Number		Pkg qty	Weight (1 pce) g
1	**End stops**	10 mm	0.394 in	Dark grey	BAM4	1SNK900001R0000		50	14.00
2	**Circuit separators**	1.5 mm	0.059 in	Grey	CS-RGW-S	1SNA519200R0000		25	4.59
3	**Terminal block markers**	Blank marker		White	M-W610PC	1SNA235511R0600		360	8.03
					MG-CPM-01 41090	1SNB041090R0510		1960	0.351

Complete list of accessories is indicated in the terminal block datasheet including end stops.
Some accessories such as jumper bars may modify the terminal block's ratings: Complete information available in the accessories section of the catalog.

1SNC168026S0201

Technical data valid for copper conductors only.

RGW6-PE Ring lug terminal blocks

Ground - 12 mm 0.472 in spacing

RGW6-PE

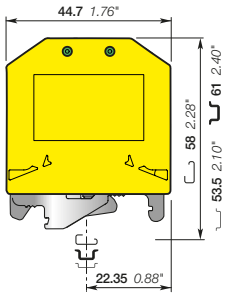

12 mm 0.472 in spacing

	6 mm²
	10 AWG

Description

- Stud terminal block for ring lug connection,
- Integrated captive nuts in protective wings provide easy and secured connection,
- Universal mounting on symmetrical and asymmetrical rails.

Ordering details

Description		Color	Type	Part Number		Pkg qty	Weight (1 pce) g
Ground	With 2 studs M4 and captive nuts in wings	Green-yellow	RGW6-PE-V0	1SNA511024R0500		40	31.76

Main technical data

		IEC	UL	CSA
Lugs	Rigid: Solid/Stranded	0.1 ... 6 mm²	22 ... 10 AWG	22 ... 10 AWG
	Flexible with insulated ferrule	0.1 ... 6 mm²		
	Gauge			
Rated cross section		6 mm²	10 AWG	10 AWG
Rated short-time withstand current (1s)		720 A		
Protection		IP10	NEMA 1	

Mounting instructions

Rail	G32, TH 35-7.5, TH 35-15
Nuts Tool	Flat screwdriver Ø 5.5 mm Ø 0.217 in
Torque	0.8 ... 1.2 N.m 7.1 ... 10.6 lb.in
Rail connection screw Tool	Flat screwdriver Ø 4 mm Ø 0.157 in
Torque	0.5 ... 0.8 N.m 4.4 ... 5.3 lb.in
Max width of lug	9.4 mm 0.37 in

The connecting capacity data for one Rigid: Solid/Stranded, or one Flexible conductor (when applicable) is a mandatory information required by IEC, UL and CSA standards (Copper conductors). All other data are provided as supplementary information only. For more details, please consult our CB, UL or CSA certificates and technical datasheet available on http://www.TE.com

CE RoHS USR CNR CSA

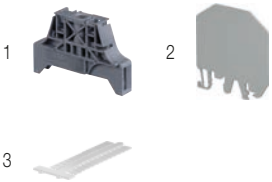

Accessories

	Description			Color	Type	Part Number		Pkg qty	Weight (1 pce) g
1	**End stops**	10 mm	0.394 in	Dark grey	BAM4	1SNK900001R0000		50	14.00
2	**Circuit separators**	1.5 mm	0.059 in	Grey	CS-RGW-S	1SNA519200R0000		25	4.59
3	**Terminal block markers**	Blank marker		White	M-W810PC	1SNA235510R0800		260	0.27
					MG-CPM-01 41096	1SNB041096R0810		1120	0.400

Complete list of accessories is indicated in the terminal block datasheet including end stops.
Some accessories such as jumper bars may modify the terminal block's ratings: Complete information available in the accessories section of the catalog.

1SNC168017S0201

Technical data valid for copper conductors only.

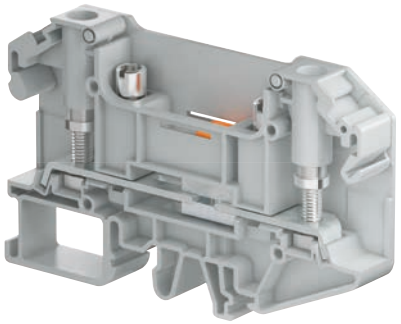

Secure your measurement operations

With its 100% captive wire connection, RGW test & measurement terminal blocks offer a safe and ergonomic test measurement operation.

High performances

- 6 mm² 10 AWG
- 41 A (IEC) 30 A (UL)
- 1000 V (IEC) 600V (UL).

Features

- Test sockets provided on every disconnect blocks RGW6-ST-1…
- Aligned feed-through version RGW6-R1… available for all types of schematics.

Typical measurement configuration

Common point on the transformers

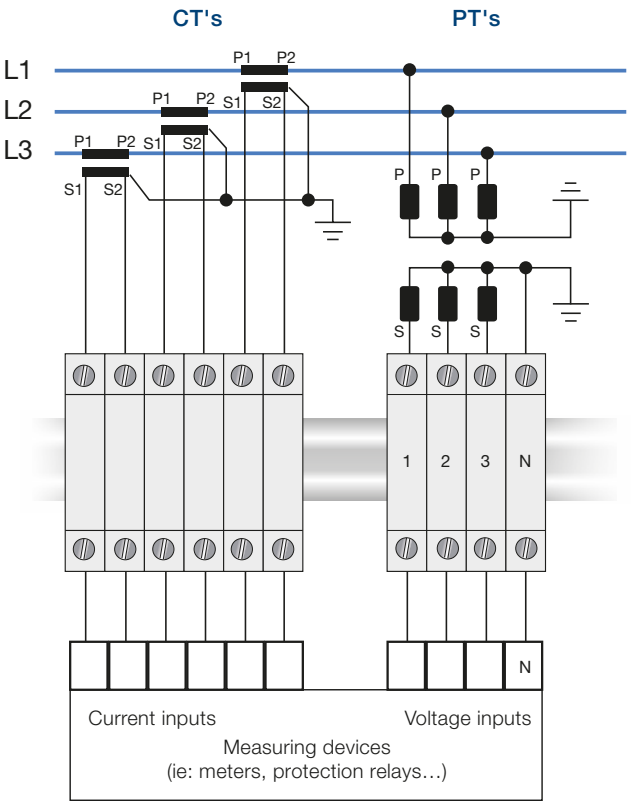

Bill of material

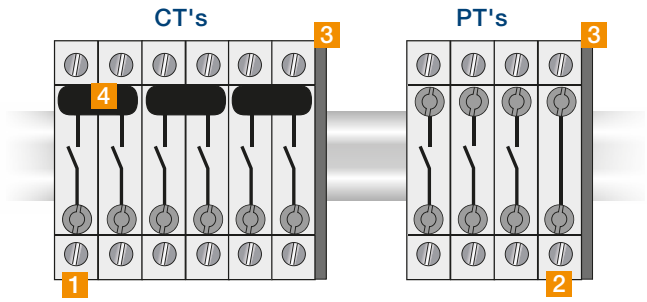

	Description	Type	Order code	Qty needed CT's	Qty needed PT's
1	Terminal block	RGW6-ST-1-V0	1SNA512124R0000	6	3
2	Terminal block	RGW6-R1-V0	1SNA510224R0000	0	1
3	End section	E-RGW6-ST	1SNA519004R0100	1	1
4	Short-circuit plug	SCP12-2	1SNA519300R0200	3	0

1SNC168038S0201

RGW6-ST-1 Ring lug terminal blocks

Test disconnect with sliding link - 11 mm 0.433 in spacing

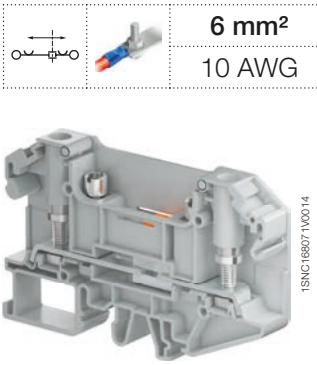

6 mm²
10 AWG

1SNC168071V0014

RGW6-ST-1

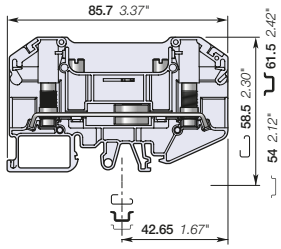

11 mm 0.433 in spacing

Description

- Stud terminal block for ring lug connection,
- Integrated captive nuts in protective wings provide easy and secured connection,
- Secure your disconnect operations with the disconnect sliding link operated with a standard screwdriver,
- Ease your test operations with the 2 independent built-in test sockets compatible with DIA 4 mm 0.157 in test plugs,
- Universal mounting on symmetrical and asymmetrical rails.

Ordering details

Description		Color	Type	Part Number		Pkg qty	Weight (1 pce) g
Disconnect	With 2 studs M4 and captive nuts in wings	Grey	RGW6-ST-1-V0	1SNA512124R0000		25	33.66

Main technical data

		IEC	UL	CSA
Lugs	Rigid: Solid/Stranded	0.1 ... 6 mm²	22 ... 10 AWG	22 ... 10 AWG
	Flexible with insulated ferrule	0.1 ... 6 mm²		
	Gauge			
Rated current		41 A	30 A	30 A
Maximum current			30 A	
Rated cross section		6 mm²	10 AWG	10 AWG
Rated voltage		1000 V	600 V	600 V
Rated short-time withstand current (1s)		720 A		
Impulse withstand voltage		8000 V		
Protection		IP10	NEMA 1	

Mounting instructions

Rail	G32, TH 35-7.5, TH 35-15
Nuts Tool	Flat screwdriver Ø 5.5 mm Ø 0.217 in
Torque	0.8 ... 1.2 N.m 7.1 ... 10.6 lb.in
Disconnect device Tool	Flat screwdriver Ø 4 mm Ø 0.157 in
Torque	0.5 ... 0.8 N.m 4.4 ... 5.3 lb.in
Max width of lug	9.4 mm 0.37 in

The connecting capacity data for one Rigid: Solid/Stranded, or one Flexible conductor (when applicable) is a mandatory information required by IEC, UL and CSA standards (Copper conductors). All other data are provided as supplementary information only. For more details, please consult our CB, UL or CSA certificates and technical datasheet available on http://www.TE.com

CE RoHS USR CNR CSA

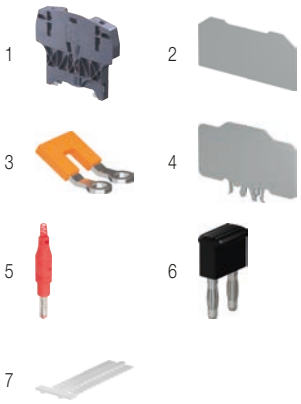

Accessories

	Description			Color	Type	Part Number		Pkg qty	Weight (1 pce) g
1	**End stops**	10 mm	0.394 in	Dark grey	BAZH1	1SNK900102R0000		20	24.00
2	**End sections**	1.4 mm	0.055 in	Grey	E-RGW6-ST	1SNA519004R0100		25	5.18
3	**Lateral jumper bars**	2 poles	41 A (IEC)	Orange	PC-RG6-2	1SNA519104R0200		25	3.44
		3 poles	41 A (IEC)		PC-RG6-3	1SNA519104R0300		20	5.40
		4 poles	41 A (IEC)		PC-RG6-4	1SNA519104R0400		15	7.33
		7 poles	41 A (IEC)		PC-RG6-7	1SNA519104R0700		5	13.24
		10 poles	41 A (IEC)		PC-RG6-10	1SNA519104R1000		5	19.05
4	**Circuit separators**	2 mm	0.079 in	Grey	CS-RGW-L	1SNA519201R0000		25	13.72
5	**Test plugs**	DIA 4 mm 0.157 in IP20		Red	FC4-1	1SNA167927R1000		10	11.00
6	**Short circuit plugs**			Black	SCP12-2	1SNA519300R0200		10	
7	**Terminal block markers**	Blank marker		White	M-W810PC	1SNA235510R0800		260	0.27
					MG-CPM-01 41096	1SNB041096R0810		1120	0.400

Complete list of accessories is indicated in the terminal block datasheet including end stops.
Some accessories such as jumper bars may modify the terminal block's ratings: Complete information available in the accessories section of the catalog.

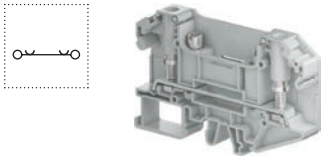

Feed-through Ring lug terminal blocks

Description		Color	Type	Part Number		Pkg qty	Weight (1 pce) g
Feed-through	With 2 studs M4 and captive nuts in wings	Grey	RGW6-R1-V0	1SNA510224R0000		25	36.42

Technical data valid for copper conductors only.

1SNC168018S0201

RGW6-R1 Ring lug terminal blocks

Feed-through - 11 mm 0.433 in spacing

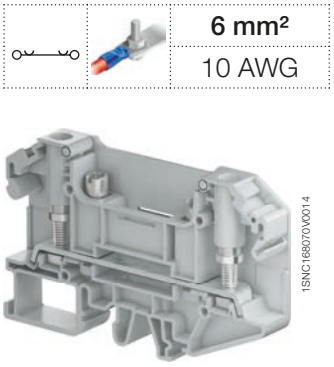

6 mm²
10 AWG

1SNC168070V0014

RGW6-R1

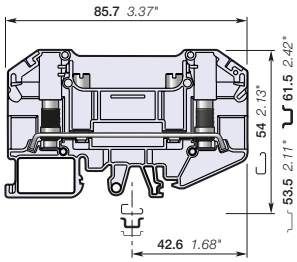

11 mm 0.433 in spacing

Description

- Stud terminal block for ring lug connection,
- Feed-through with the same profile as disconnect terminal block RGW6-ST-1…,
- Integrated captive nuts in protective wings provide easy and secured connection,
- Universal mounting on symmetrical and asymmetrical rails.

Ordering details

Description		Color	Type	Part Number		Pkg qty	Weight (1 pce) g
Feed-through	With 2 studs M4 and captive nuts in wings	Grey	RGW6-R1-V0	1SNA510224R0000		25	36.42

Main technical data

		IEC	UL	CSA
Lugs	Rigid: Solid/Stranded	0.1 … 6 mm²	22 … 10 AWG	22 … 10 AWG
	Flexible with insulated ferrule	0.1 … 6 mm²		
	Gauge			
Rated current		41 A	30 A	30 A
Maximum current			30 A	
Rated cross section		6 mm²	10 AWG	10 AWG
Rated short-time withstand current (1s)		720 A		
Rated voltage		1000 V	600 V	600 V
Impulse withstand voltage		8000 V		
Protection		IP10	NEMA 1	

Mounting instructions

Rail	G32, TH 35-7.5, TH 35-15
Nuts	Flat screwdriver
Tool	Ø 5.5 mm Ø 0.217 in
Torque	0.8 … 1.2 N.m 7.1 … 10.6 lb.in
Max width of lug	9.4 mm 0.37 in

The connecting capacity data for one Rigid: Solid/Stranded, or one Flexible conductor (when applicable) is a mandatory information required by IEC, UL and CSA standards (Copper conductors). All other data are provided as supplementary information only. For more details, please consult our CB, UL or CSA certificates and technical datasheet available on http://www.TE.com

CE RoHS USR CNR CSA

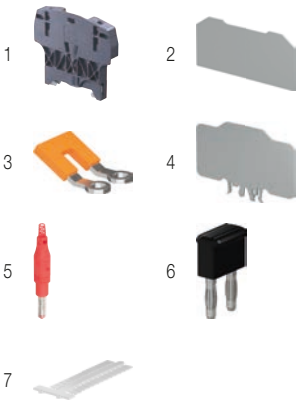

Accessories

	Description			Color	Type	Part Number		Pkg qty	Weight (1 pce) g
1	**End stops**	10 mm	0.394 in	Dark grey	BAZH1	1SNK900102R0000		20	24.00
2	**End sections**	1.4 mm	0.055 in	Grey	E-RGW6-ST	1SNA519004R0100		25	5.18
3	**Lateral jumper bars**	2 poles	41 A (IEC)	Orange	PC-RG6-2	1SNA519104R0200		25	3.44
		3 poles	41 A (IEC)		PC-RG6-3	1SNA519104R0300		20	5.40
		4 poles	41 A (IEC)		PC-RG6-4	1SNA519104R0400		15	7.33
		7 poles	41 A (IEC)		PC-RG6-7	1SNA519104R0700		5	13.24
		10 poles	41 A (IEC)		PC-RG6-10	1SNA519104R1000		5	19.05
4	**Circuit separators**	2 mm	0.079 in	Grey	CS-RGW-L	1SNA519201R0000		25	13.72
5	**Test plugs**	DIA 4 mm	0.157 in IP20	Red	FC4-1	1SNA167927R1000		10	11.00
6	**Short circuit plugs**			Black	SCP12-2	1SNA519300R0200		10	
7	**Terminal block markers**	Blank marker		White	M-W810PC	1SNA235510R0800		260	0.27
					MG-CPM-01 41096	1SNB041096R0810		1120	0.400

Complete list of accessories is indicated in the terminal block datasheet including end stops.
Some accessories such as jumper bars may modify the terminal block's ratings: Complete information available in the accessories section of the catalog.

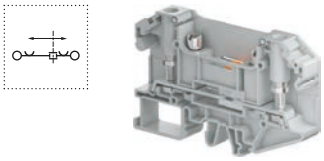

Disconnect Ring lug terminal blocks

Description		Color	Type	Part Number		Pkg qty	Weight (1 pce) g
Disconnect	With 2 studs M4 and captive nuts in wings	Grey	RGW6-ST-1-V0	1SNA512124R0000		25	33.66

1SNC168027S0201

Technical data valid for copper conductors only.

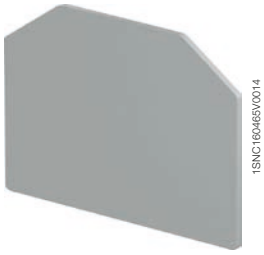

E-RGW2.5

E-RGW2.5 end sections

Description

– End section compatible with RGW2.5... and RGW2.5-T... terminal block

Ordering details

Description	Color	Type	Part Number		Pkg qty	Weight (1 pce) g
1.2 mm 0.047 in spacing	Grey	E-RGW2.5	1SNA519003R0000		25	1.89

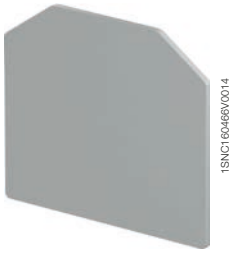

E-RGW6

E-RGW6 end sections

Description

– End section compatible with RGW6... and RGW6-T... terminal block

Ordering details

Description	Color	Type	Part Number		Pkg qty	Weight (1 pce) g
1.4 mm 0.0551 in spacing	Grey	E-RGW6	1SNA519004R0000		50	2.65

E-RGW6-ST

E-RGW6-ST end sections

Description

– End section compatible with RGW6-ST-1… and RGW6-R1... terminal block

Ordering details

Description	Color	Type	Part Number		Pkg qty	Weight (1 pce) g
1.4 mm 0.0551 in spacing	Grey	E-RGW6-ST	1SNA519004R0100		25	5.18

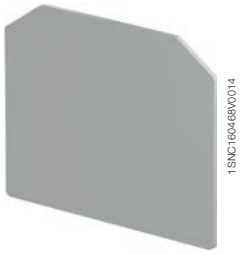

E-RGW25

E-RGW25 end sections

Description

– End section compatible with RGW25... terminal block

Ordering details

Description	Color	Type	Part Number		Pkg qty	Weight (1 pce) g
1.4 mm 0.0551 in spacing	Grey	E-RGW25	1SNA519005R0000		25	0.146

Main technical data

Material specifications	Insulating material	Polyamide	
	Flammability	V0	
	NF F 16 101	I2F2	
Ambient temperature min/max	Service IEC 60068-2-1	-40 ... +100 °C	-40 ... +212 °C
	Storage	-40 ... +100 °C	-40 ... +212 °C
	Installing	-25 ... +70 °C	-13 ... +167 °C

All the main technical data provided are "manufacturer" values.

CE RoHS

1SNC168035S0201

Technical data valid for copper conductors only.

1SNC160469V0014

PC-RG2.5

Lateral jumper bars

Description

- Lateral jumper bar for ring lug terminal block,
- Allow the connection of consecutive blocks,
- Compatible with RGW terminal block.

Ordering details

Description				Color	Type	Part Number		Pkg qty	Weight (1 pce) g
Compatible with M3 stud. For blocks RGW2.5...									
9 mm	0.354 in	2 poles	24 A (IEC)	Orange	PC-RG2.5-2	1SNA519103R0200		25	3.02
		3 poles	24 A (IEC)		PC-RG2.5-3	1SNA519103R0300		20	4.69
		4 poles	24 A (IEC)		PC-RG2.5-4	1SNA519103R0400		15	6.36
		10 poles	24 A (IEC)		PC-RG2.5-10	1SNA519103R1000		5	16.39
Compatible with M4 stud. For blocks RGW6...									
11 mm	0.433 in	2 poles	41 A (IEC)	Orange	PC-RG6-2	1SNA519104R0200		25	3.44
		3 poles	41 A (IEC)		PC-RG6-3	1SNA519104R0300		20	5.40
		4 poles	41 A (IEC)		PC-RG6-4	1SNA519104R0400		15	7.33
		7 poles	41 A (IEC)		PC-RG6-7	1SNA519104R0700		5	13.24
		10 poles	41 A (IEC)		PC-RG6-10	1SNA519104R1000		5	19.05
Compatible with M5 or M6 stud. For blocks RGW25...									
18 mm	0.709 in	2 poles	101 A (IEC)	Orange	PC-RG25-2	1SNA519106R0200		25	8.81

Main technical data

Material specifications	Insulating material	Polyamide	
	Flammability	V0	
	NF F 16 101	I2F2	
Ambient temperature min/max	Service IEC 60068-2-1	-40 ... +100 °C	-40 ... +212 °C
	Storage	-40 ... +100 °C	-40 ... +212 °C
	Installing	-25 ... +70 °C	-13 ... +167 °C

All the main technical data provided are "manufacturer" values.

CE RoHS

1SNC168036S0201

Technical data valid for copper conductors only.

CS-RGW-L

CS-RGW circuit separators

Description

- Circuit separator for RGW terminal blocks,
- Ease the visual identification of the several circuits within the terminal block assemblies,
- Compatible with all RGW terminal blocks.

Ordering details

Description	Color	Type	Part Number		Pkg qty	Weight (1 pce) g
2 mm 0.078 in spacing	Grey	CS-RGW-L	1SNA519201R0000		25	13.72

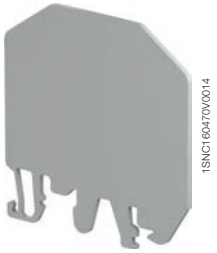

CS-RGW-S

CS-RGW circuit separators

Description

- Circuit separator for RGW terminal blocks,
- Ease the visual identification of the several circuits within the terminal block assemblies,
- Compatible with RGW feed-through and ground terminal blocks up to 11 mm 0.433 in spacing.

Ordering details

Description	Color	Type	Part Number		Pkg qty	Weight (1 pce) g
1.5 mm 0.059 in spacing	Grey	CS-RGW-S	1SNA519200R0000		25	4.59

Main technical data

Material specifications	Insulating material	Polyamide	
	Flammability	V0	
	NF F 16 101	I2F2	
Ambient temperature min/max	Service IEC 60068-2-1	-40 ... +100 °C	-40 ... +212 °C
	Storage	-40 ... +100 °C	-40 ... +212 °C
	Installing	-25 ... +70 °C	-13 ... +167 °C

All the main technical data provided are "manufacturer" values.

CE RoHS

1SNC168037S0201

Technical data valid for copper conductors only.

Markers and marking systems

Marking systems			Support plates			Markers		
	Type	Part Number		Type	Part Number		Type	Part Number
	MG3 KIT	1SNB419001R0000		MG2-QTB 991011	1SNB991011R0000	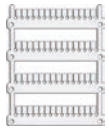	MG-CPM-01 41090 MG-CPM-01-41096	1SNB041090R0510 1SNB041096R0810
	AMS 600 KIT AMS 250 BASIC KIT	1SNA360000R2400 1SNA360000R2500		SPRC 26	1SNA360036R0300	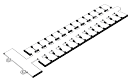	M-W610PC M-W810PC M-W1010PC	1SNA235511R0600 1SNA235510R0800 1SNA235512R1000

1SNC168039S0201

LET'S CONNECT

We make it easy to connect with our experts and are ready to provide all the support you need. For additional information or product assistance, please contact your field representative or our customer service department. Additional information is also available on the website http://www.te.com/entrelec.

TECHNICAL SUPPORT

te.com/support-center

Asia:
+86 400-820-6015

Europe, Middle East, & Africa:
+49 6251-133-0

North America:
+1-888-441-9982

te.com

ENTRELEC, TE Connectivity, TE Connectivity (logo) and Every Connection Counts are trademarks. All other logos, products and/or company names referred to herein might be trademarks of their respective owners.

All other logos, products and/or company names referred to herein might be trademarks of their respective owners.

The information given herein, including drawings, illustrations and schematics which are intended for illustration purposes only, is believed to be reliable. However, TE Connectivity makes no warranties as to its accuracy or completeness and disclaims any liability in connection with its use. TE Connectivity's obligations shall only be as set forth in TE Connectivity's Standard Terms and Conditions of Sale for this product and in no case will TE Connectivity be liable for any incidental, indirect or consequential damages arising out of the sale, resale, use or misuse of the product. Users of TE Connectivity products should make their own evaluation to determine the suitability of each such product for the specific application.

© 2020 TE Connectivity Ltd. family of companies All Rights Reserved.

1-1773970-7_EN **01/20 - Printed in France (PDF)**

TE Connectivity

3, rue Jean Perrin
69687 Chassieu cedex
France

Tel: +33 481923100

www.te.com/