1SNA008290R1300 ✔ ACTIVE

TE Internal #: 1SNA008290R1300

TE Internal Description: FU520

View on TE.com >

Product Compliance

For compliance documentation, visit the product page on TE.com>

EU RoHS Directive 2011/65/EU	Compliant
EU ELV Directive 2000/53/EC	Compliant
China RoHS 2 Directive MIIT Order No 32, 2016	No Restricted Materials Above Threshold
EU REACH Regulation (EC) No. 1907/2006	Current ECHA Candidate List: JUNE 2025 (250) Candidate List Declared Against: JUNE 2024 (241) Does not contain REACH SVHC
Halogen Content	Low Halogen - Br, Cl, F < 900 ppm per homogenous material. Also BFR/CFR/PVC Free
Solder Process Capability	Not reviewed for solder process capability

Product Compliance Disclaimer

This information is provided based on reasonable inquiry of our suppliers and represents our current actual knowledge based on the information they provided. This information is subject to change. The part numbers that TE has identified as EU RoHS compliant have a maximum concentration of 0.1% by weight in homogenous materials for lead, hexavalent chromium, mercury, PBB, PBDE, DBP, BBP, DEHP, DIBP, and 0.01% for cadmium, or qualify for an exemption to these limits as defined in the Annexes of Directive 2011/65/EU (RoHS2). Finished electrical and electronic equipment products will be CE marked as required by Directive 2011/65/EU. Components may not be CE marked. Additionally, the part numbers that TE has identified as EU ELV compliant have a maximum concentration of 0.1% by weight in homogenous materials for lead, hexavalent chromium, and mercury, and 0.01% for cadmium, or qualify for an exemption to these limits as defined in the Annexes of Directive 2000/53/EC (ELV). Regarding the REACH Regulation, the information TE provides on SVHC in articles for this part number is based on the latest European Chemicals Agency (ECHA) 'Guidance on requirements for substances in articles' posted at this URL: https://echa.europa.eu/guidance-documents/guidance-on-reach

Compatible Parts

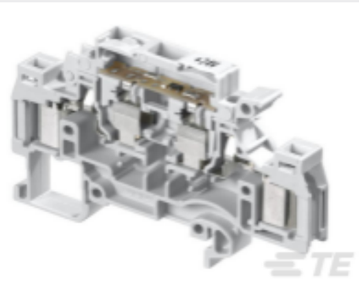

TE Part # 1SNA199211R2300
D1.5/8.SFLT.ADO

TE Part # 1SNK508412R0000
ZS4-SF1-R1

TE Part # 1SNA115936R0500
M4/8.D2.SFD3

TE Part # 1SNA111034R0400
MB10/12.SFL

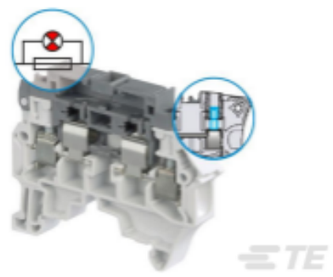

TE Part # 1SNK508413R0000
ZS4-SF1-R2

TE Part # 1SNA115650R0200
M4/8.D2.SFDJ

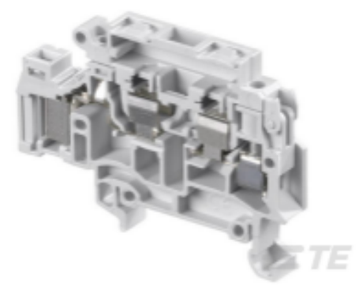

TE Part # 1SNA399785R0300
D4/8.SF.I.ADO

TE Part # 1SNA105135R1100
M4/8.SF2

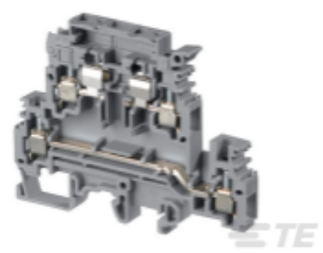

TE Part # 1SNA115646R2200
M4/8.D2.SFL

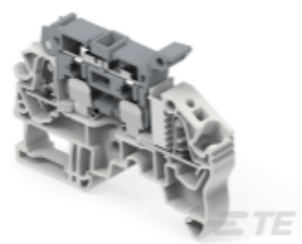

TE Part # 1SNK708411R0000
ZK4-SF1-R1

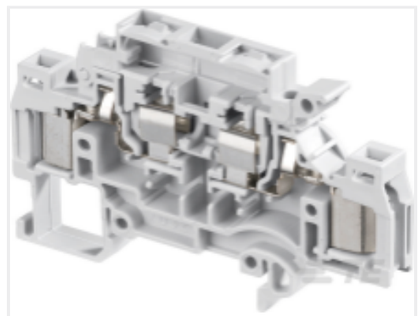

TE Part # 1SNA199208R1100
D1.5/8.SFT.ADO

TE Part # 1SNA115649R0500
M4/8.D2.SFLJ

TE Part # 1SNA115657R2501
TERMINAL BLOCK M4/8.SF

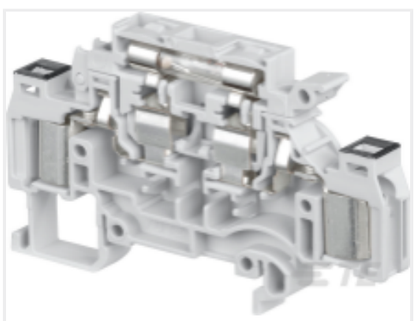

TE Part # 1SNA199188R2500
D2.5/8.SFDT.ADO2

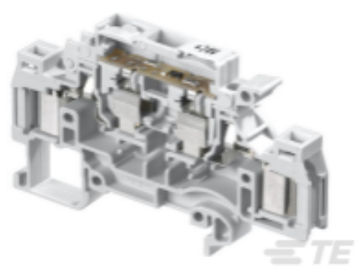

TE Part # 1SNA199212R2400
D1.5/8.SFDT.ADO

TE Part # 1SNA115661R2100
M4/8.SFL

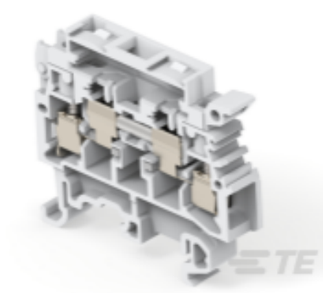

TE Part # 1SNA115662R2200
M4/8.SFT

TE Part # 1SNA115657R2500
M4/8.SF

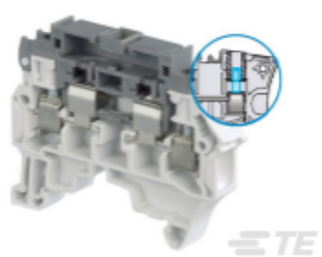

TE Part # 1SNK508411R0000
ZS4-SF1-T2

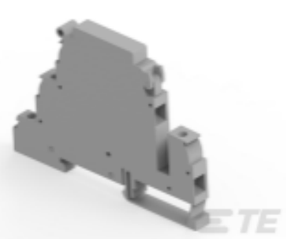

TE Part # 1SNA400270R2000
D4/8.D2.P.SF

Customers Also Bought

TE Part #1SNA114836R0000
BAMH

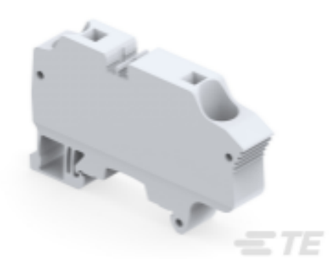

TE Part #1SNK712010R0000
ZK16

TE Part #1SNK140000R0000
MC512

TE Part #1SNA008291R0000
FU520

TE Part #1SNK705910R0000
EK2.5

TE Part #1SNA115129R1400
M16/12

TE Part #1SNA115686R1300
M4/6.SNB

TE Part #1SNA125118R1300
M6/8.N

TE Part #1SNK706010R0000
ZK4

TE Part #1SNA179535R2300
BRT125A

Documents

Datasheets & Catalog Pages

Catalogue - ENTRELEC terminal-blocks-sna-series

English

FU520 1A

English

ENTRELEC Terminal Block - Master Catalog

ENTRELEC Terminal Block - Master Catalog

English

ENTRELEC Terminal Blocks Catalogue (RUS)