1EGG1C-1 ✔ ACTIVE

Corcom | Corcom GG

TE Internal #: 6609115-4

Power Entry Module, None Input, No Switch, Filter Shield, Right Angle, 1 A, .250" FASTON Output, 250 VAC, Filtered, Corcom GG, Power Entry Modules

View on TE.com >

EMI & EMC Solutions > IEC Inlets > Power Entry Modules > CORCOM GG SERIES MULTI-FUNCTION INLET FI

Filter Type: **Power Entry Module**

Input Voltage Selection: **None**

Filter Switch Type: **No Switch**

Filter Shield Type: **Filter Shield**

Product Orientation: **Right Angle**

All CORCOM GG SERIES MULTI-FUNCTION INLET FI (33)

Features

Product Type Features

Ground Choke Option	Yes
Filter Type	Power Entry Module
Filter Switch Type	No Switch
Output Termination Type	.250" FASTON
Filtering Requirements	Filtered
Filter Connector Type	IEC 320/C-14

Configuration Features

Fuse Options	Single

Electrical Characteristics

Input Voltage Selection	None
Leakage Current (Max) (120VAC, 60Hz)	250 µA
Leakage Current (Max) (250VAC, 50Hz)	420 µA

Current Rating	1 A
Operating Voltage	250 VAC

Body Features

Filter Shield Type	Filter Shield
Product Orientation	Right Angle

Mechanical Attachment

Panel Mount Feature Type	Flange

Usage Conditions

Operating Temperature Range	-10 – 40 °C[14 – 104 °F]

Product Compliance

For compliance documentation, visit the product page on TE.com>

EU RoHS Directive 2011/65/EU	Compliant
EU ELV Directive 2000/53/EC	Compliant
China RoHS 2 Directive MIIT Order No 32, 2016	有害物质含量符合标准要求 No Restricted Substance(s) Above Threshold
EU REACH Regulation (EC) No. 1907/2006	Current ECHA Candidate List: JUNE 2025 (250) Candidate List Declared Against: JUNE 2025 (250) Does not contain REACH SVHC
Halogen Content	Not Low Halogen - contains Br or Cl > 900 ppm.
Solder Process Capability	Not applicable for solder process capability

Product Compliance Disclaimer

This information is provided based on reasonable inquiry of our suppliers and represents our current actual knowledge based on the information they provided. This information is subject to change. The part numbers that TE has identified as EU RoHS compliant have a maximum concentration of 0.1% by weight in homogenous materials for lead, hexavalent chromium, mercury, PBB, PBDE, DBP, BBP, DEHP, DIBP, and 0.01% for cadmium, or qualify for an exemption to these limits as defined in the Annexes of Directive 2011/65/EU (RoHS2). Finished electrical and electronic equipment products will be CE marked as required by Directive 2011/65/EU. Components may not be CE marked. Additionally, the part numbers that TE has identified as EU ELV compliant have a maximum concentration of 0.1% by weight in homogenous materials for lead, hexavalent chromium, and mercury, and 0.01% for cadmium, or qualify for an exemption to these limits as defined in the Annexes of Directive 2000/53/EC (ELV). Regarding the REACH Regulation, the information TE provides on SVHC in articles for this part number is based on the latest European Chemicals Agency (ECHA) 'Guidance on requirements for substances in articles' posted at this URL: https://echa.europa.eu/guidance-documents/guidance-on-reach

Compatible Parts

TE Part # CAT-C8114-G34
CORCOM GG SERIES MULTI-FUNCTION INLET FI

TE Part # 1609116-6
10EHGS1-2=F8242

Also in the Series | Corcom GG

Power Entry Modules(33)

Customers Also Bought

TE Part #114017-ZZ
SEALING PLUG, SIZE 12/16, WHT

TE Part #CAT-D48-ST273
DEUTSCH Connector Solid Contacts

TE Part #CAT-D487-W416
Wedgelocks: DEUTSCH DT

TE Part #DT06-2S
PLG, 2P, GRY, N

TE Part #DT04-2P
REC, 2P, GRY, N

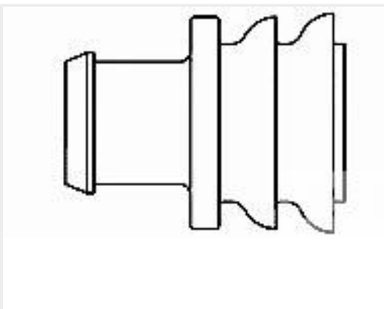

TE Part #281934-2
SINGLE WIRE SEAL

TE Part #CAT-AM71-CH8172
AMP SUPERSEAL 1.5MM, CONNECTOR HOUSING

Documents

Product Drawings

1EGG1C-1=F7643 S0

English

CAD Files

Customer View Model

ENG_CVM_CVM_6609115-4_C1.3d_igs.zip

English

Customer View Model

ENG_CVM_CVM_6609115-4_C1.3d_stp.zip

English

Customer View Model

ENG_CVM_CVM_6609115-4_C1.2d_dxf.zip

English

3D PDF

3D

By downloading the CAD file I accept and agree to the Terms and Conditions of use.

Datasheets & Catalog Pages

1654001_CORCOM_PRODUCT_GUIDE_GG_HG

English

Corcom Combined Selector Charts

English

1-1654250-1_CORCOM_EMI_RFI_QRG

English