High Voltage MLC Chips

For 600V to 5000V Application

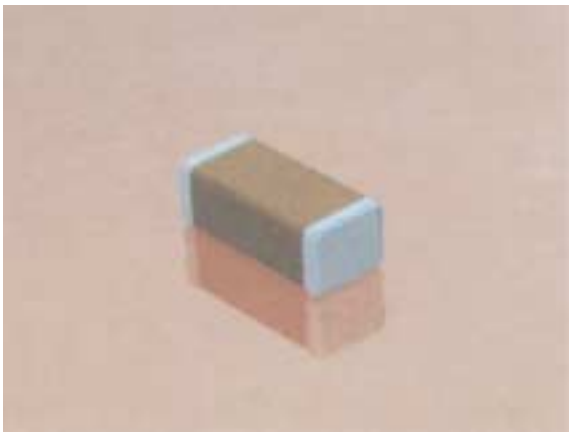

High value, low leakage and small size are difficult parameters to obtain in capacitors for high voltage systems. AVX special high voltage MLC chips capacitors meet these performance characteristics and are designed for applications such as snubbers in high frequency power converters, resonators in SMPS, and high voltage coupling/DC blocking. These high voltage chip designs exhibit low ESRs at high frequencies.

Larger physical sizes than normally encountered chips are used to make high voltage chips. These larger sizes require that special precautions be taken in applying these chips in surface mount assemblies. This is due to differences in the coefficient of thermal expansion (CTE) between the substrate materials and chip capacitors. Apply heat at less than 4°C per second during the preheat. Maximum preheat temperature must be within 50°C of the soldering temperature. The solder temperature should not exceed 230°C. Chips 1808 and larger to use reflow soldering only.

Capacitors with X7R Dielectrics are not intended for AC line filtering applications. Contact plant for recommendations.

Capacitors may require protective surface coating to prevent external arcing.

HOW TO ORDER

1808	A	A	271	K	A	1	1A
AVX Style	**Voltage**	**Temperature Coefficient**	**Capacitance Code**	**Capacitance Tolerance**	**Failure Rate**	**Termination***	**Packaging/Marking****
1206	600V = C	C0G = A	(2 significant digits	C0G: J = ±5%	A = Not	1 = Pd/Ag	ME = 7" Reel
1210	1000V = A	X7R = C	+ no. of zeros)	K = ±10%	Applicable	T = NiGuard	Marked
1808	1500V = S		Examples:	M = ±20%		Nickel	RE = 13" Reel
1812	2000V = G		10 pF = 100	X7R: K = ±10%		Barrier	Marked
1825	2500V = W		100 pF = 101	M = ±20%		Solder	BE = Bulk/Marked
2220	3000V = H		1,000 pF = 102	Z = +80%, -20%		Plate	1A = 7" Reel
2225	4000V = J		22,000 pF = 223				Unmarked
3640	5000V = K		220,000 pF = 224				3A = 13" Reel
			1 µF = 105				Unmarked
							9A = Bulk/Unmarked

***Note:** Leaded terminations are available.
Styles 1825, 2225, & 3640 are available with "N", "L" or "J" leads as seen on page 9.
"V" denotes uncoated leaded units similar to SM0 product.
"W" denotes leaded epoxy coated units similar to SM5 product.
IE 1825AA103KAV00J would be uncoated leaded part with "J" style leads.

****Note:** Style 1808 cannot have the marking oriented in tape & reel packaging due to square cross-section of chip.
Unmarked product is standard.

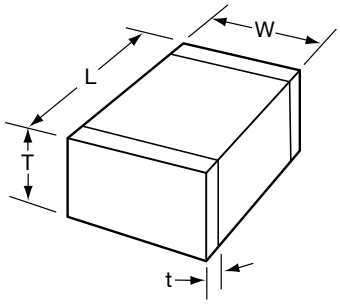

DIMENSIONS

millimeters (inches)

SIZE	1206	1210	1808*	1812*	1825*	2220*	2225*	3640*
(L) Length	3.20 ± 0.2 (0.126 ± 0.008)	3.20 ± 0.2 (0.126 ± 0.008)	4.57 ± 0.25 (0.180 ± 0.010)	4.50 ± 0.3 (0.177 ± 0.012)	4.50 ± 0.3 (0.177 ± 0.012)	5.7 ± 0.4 (0.224 ± 0.016)	5.72 ± 0.25 (0.225 ± 0.010)	9.14 ± 0.25 (0.360 ± 0.010)
(W) Width	1.60 ± 0.2 (0.063 ± 0.008)	2.50 ± 0.2 (0.098 ± 0.008)	2.03 ± 0.25 (0.080 ± 0.010)	3.20 ± 0.2 (0.126 ± 0.008)	6.40 ± 0.3 (0.252 ± 0.012)	5.0 ± 0.4 (0.197 ± 0.016)	6.35 ± 0.25 (0.250 ± 0.010)	10.2 ± 0.25 (0.400 ± 0.010)
(T) Thickness Max.	1.52 (0.060)	1.70 (0.067)	2.03 (0.080)	2.54 (0.100)	2.54 (0.100)	3.3 (0.130)	2.54 (0.100)	2.54 (0.100)
(t) terminal min.	0.25 (0.010)	0.25 (0.010)	0.25 (0.010)	0.25 (0.010)	0.25 (0.010)	0.25 (0.010)	0.25 (0.010)	0.76 (0.030)
max.	0.75 (0.030)	0.75 (0.030)	1.02 (0.040)	1.02 (0.040)	1.02 (0.040)	1.02 (0.040)	1.02 (0.040)	1.52 (0.060)

*Reflow Soldering Only

High Voltage MLC Chips

For 600V to 5000V Applications

C0G Dielectric

Performance Characteristics

Capacitance Range	10 pF to 0.047 µF (25°C, 1.0 ±0.2 Vrms at 1kHz, for ≤ 1000 pF use 1 MHz)
Capacitance Tolerances	±5%, ±10%, ±20%
Dissipation Factor	0.1% max. (+25°C, 1.0 ±0.2 Vrms, 1kHz, for ≤ 1000 pF use 1 MHz)
Operating Temperature Range	-55°C to +125°C
Temperature Characteristic	0 ±30 ppm/°C (0 VDC)
Voltage Ratings	600, 1000, 1500, 2000, 2500, 3000, 4000 & 5000 VDC (+125°C)
Insulation Resistance (+25°C, at 500 VDC)	100K MΩ min. or 1000 MΩ - µF min., whichever is less
Insulation Resistance (+125°C, at 500 VDC)	10K MΩ min. or 100 MΩ - µF min., whichever is less
Dielectric Strength	120% rated voltage for 5 seconds at 50 mA max. current

HIGH VOLTAGE C0G CAPACITANCE VALUES

VOLTAGE		1206	1210	1808	1812	1825	2220	2225	3640
600	min.	100 pF	100 pF	100 pF	100 pF	1000 pF	1000 pF	1000 pF	1000 pF
	max.	680 pF	1500 pF	2700 pF	5600 pF	0.012 µF	0.012 µF	0.015 µF	0.047 µF
1000	min.	10 pF	100 pF	100 pF	100 pF	100 pF	1000 pF	1000 pF	1000 pF
	max.	470 pF	820 pF	1500 pF	2700 pF	6800 pF	0.010 µF	0.010 µF	0.018 µF
1500	min.	10 pF	100 pF	10 pF	10 pF	100 pF	1000 pF	1000 pF	100 pF
	max.	150 pF	330 pF	470 pF	1000 pF	2700 pF	2700 pF	3300 pF	8200 pF
2000	min.	10 pF	10 pF	10 pF	10 pF	100 pF	1000 pF	1000 pF	100 pF
	max.	68 pF	150 pF	270 pF	680 pF	1800 pF	2200 pF	2200 pF	5600 pF
2500	min.	—	—	10 pF	10 pF	10 pF	100 pF	100 pF	100 pF
	max.	—	—	150 pF	390 pF	1000 pF	1000 pF	1200 pF	3900 pF
3000	min.	—	—	10 pF	10 pF	10 pF	10 pF	10 pF	100 pF
	max.	—	—	100 pF	330 pF	680 pF	680 pF	820 pF	2200 pF
4000	min.	—	—	10 pF	10 pF	10 pF	10 pF	10 pF	100 pF
	max.	—	—	39 pF	100 pF	220 pF	220 pF	330 pF	1000 pF
5000	min.	—	—	—	—	—	—	—	10 pF
	max.	—	—	—	—	—	—	—	680 pF

X7R Dielectric

Performance Characteristics

Capacitance Range	10 pF to 0.56 µF (25°C, 1.0 ±0.2 Vrms at 1kHz)
Capacitance Tolerances	±10%; ±20%; +80%, -20%
Dissipation Factor	2.5% max. (+25°C, 1.0 ±0.2 Vrms, 1kHz)
Operating Temperature Range	-55°C to +125°C
Temperature Characteristic	±15% (0 VDC)
Voltage Ratings	600, 1000, 1500, 2000, 2500, 3000, 4000 & 5000 VDC (+125°C)
Insulation Resistance (+25°C, at 500 VDC)	100K MΩ min. or 1000 MΩ - µF min., whichever is less
Insulation Resistance (+125°C, at 500 VDC)	10K MΩ min. or 100 MΩ - µF min., whichever is less
Dielectric Strength	120% rated voltage for 5 seconds at 50 mA max. current

HIGH VOLTAGE X7R MAXIMUM CAPACITANCE VALUES

VOLTAGE		1206	1210	1808	1812	1825	2220	2225	3640
600	min.	1000 pF	1000 pF	.01 µF	.01 µF	.01 µF	.01 µF	.01 µF	.01 µF
	max.	0.015 µF	0.027 µF	0.033 µF	0.068 µF	0.15 µF	0.15 µF	0.22 µF	0.56 µF
1000	min.	1000 pF	1000 pF	1000 pF	1000 pF	1000 pF	.01 µF	.01 µF	.01 µF
	max.	4700 pF	0.010 µF	0.015 µF	0.027 µF	0.068 µF	0.068 µF	0.082 µF	0.22 µF
1500	min.	100 pF	100 pF	100 pF	100 pF	1000 pF	1000 pF	1000 pF	.01 µF
	max.	1200 pF	2700 pF	3900 pF	8200 pF	0.018 µF	0.022 µF	0.027 µF	0.068 µF
2000	min.	10 pF	100 pF	100 pF	100 pF	100 pF	1000 pF	1000 pF	1000 pF
	max.	470 pF	1000 pF	1800 pF	4700 pF	8200 pF	0.010 µF	0.012 µF	0.027 µF
2500	min.	—	—	10 pF	10 pF	100 pF	1000 pF	1000 pF	1000 pF
	max.	—	—	1200 pF	2200 pF	5600 pF	6800 pF	8200 pF	0.022 µF
3000	min.	—	—	10 pF	10 pF	100 pF	1000 pF	1000 pF	1000 pF
	max.	—	—	560 pF	1200 pF	2700 pF	3300pF	4700 pF	0.018 µF
4000	min.	—	—	—	—	—	—	—	100 pF
	max.	—	—	—	—	—	—	—	6800 pF
5000	min.	—	—	—	—	—	—	—	100 pF
	max.	—	—	—	—	—	—	—	3300 pF

AUTOMATIC INSERTION PACKAGING

TAPE & REEL QUANTITIES

All tape and reel specifications are in compliance with EIA481 & IEC-286-3.

	8mm	12mm		24mm
	1206 1210	1808	1812, 1825 2220, 2225	3640
Qty. per Reel/7" Reel	2000	2000	1000	N/A
Qty. per Reel/13" Reel	10,000	4000	4000	1000

REEL DIMENSIONS

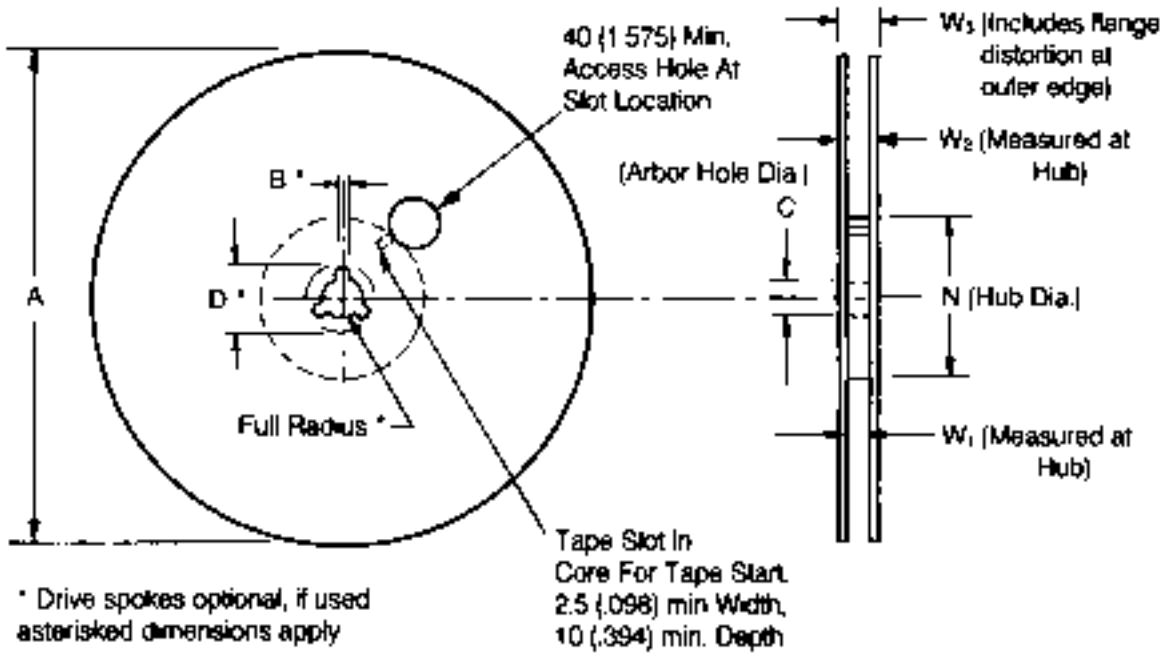

DIMENSIONS

millimeters (inches)

Tape Size	A Max.	B* Min.	C	D* Min.	N Min.	W_1	W_2 Max.	W_3
8mm	330 (12.992)	1.5 (0.059)	13.0±0.20 (0.512±0.008)	20.2 (0.795)	50 (1.969)	$8.4^{+1.5}_{-0.0}$ $(0.331^{+.060}_{-0.0})$	14.4 (0.567)	7.9 Min. (0.311) 10.9 Max. (0.429)
12mm	330 (12.992)	1.5 (0.059)	13.0±0.20 (0.512±0.008)	20.2 (0.795)	50 (1.969)	$12.4^{+2.0}_{-0.0}$ $(0.488^{+.079}_{-0.0})$	18.4 (0.724)	11.9 Min. (0.469) 15.4 Max. (0.607)
24mm	360 (14.173)	1.5 (0.059)	$13.0^{+0.5}_{-0.2}$ $(0.512^{+.020}_{-.008})$	20.2 (0.795)	60 (2.362)	$24.4^{+2.0}_{-0.0}$ $(0.961^{+.079}_{-0.0})$	30.4 (1.197)	23.9 Min. (0.941) 27.4 Max. (1.079)