SACB-4/ 8-M23 - Distributor box

1692802

https://www.phoenixcontact.com/nl/products/1692802

Please be informed that the data shown in this PDF document is generated from our online catalog. Please find the complete data in the user documentation. Our general terms of use for downloads are valid.

Distributor box, application: Standard, connection method: M12 socket Plastic, number of slots: 4, number of positions: 5, coding: A, slot assignment: Double, status display: no, Universal; master cable connection: M23 plug connection 90°, shielding: no

Your advantages

- Safety in the field, thanks to molded housing and high degree of protection
- Save space: distributor box with double occupancy for two sensors in one slot

Commercial data

Item number	1692802
Packing unit	1 pc
Minimum order quantity	1 pc
Sales key	AF3CBB
Product key	AF3CBB
GTIN	4017918177935
Weight per piece (including packing)	116,8 g
Weight per piece (excluding packing)	104,2 g
Customs tariff number	85366990
Country of origin	DE

Technical data

Notes

Assembly note	NOTE: Observe the permissible bending radii when routing cables, since the degree of protection may be at risk if the bending forces are too high. Reduce mechanical loads upstream of the connector, e.g., by using cable ties.
Note on application	Unused slots are to be sealed off prior to commissioning. Suitable sealing elements are to be found under "Accessories".

Product properties

Application	Standard
Number of positions	5
Number of slots	4
Coding	A
LED	no

Electrical properties

Max. operating voltage U_{max}	135 V
Nominal voltage U_N	120 V AC
	120 V DC
Rated current, total	12 A
Max. current carrying capacity per path	2 A
Current carrying capacity per slot	4 A

Connection data

Conductor connection

Sensor/actuator connection system	M12 socket
Tightening torque slot sensor/actuator cable	0.4 Nm

Connection assignment

Slot/position = Wire color or connection	1 / 4 (A) = 15
	1 / 2 (B) = 7
	2 / 4 (A) = 5
	2 / 2 (B) = 4
	3 / 4 (A) = 16
	3 / 2 (B) = 8
	4 / 4 (A) = 3
	4 / 2 (B) = 14
	1-4 / 1 (+ 120 V) = 19
	1-4 / 3 (0 V) = 6
	1-4 / 5 (PE) = 12

Signaling

Status display present	no

Dimensions

Dimensional drawing	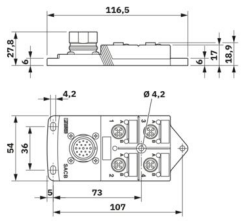
Width	54 mm
Height	26 mm
Length	117 mm

Material specifications

Material Threaded sleeve	PA
Material Housing	PA
Flammability rating according to UL 94	V0
Seal material O-ring	NBR
Contact material	CuSn
Contact surface material	Ni/Au
Contact carrier material	PA
Material of contact, master cable side	CU alloy
Material of the contact carrier on the master cable side	PA
Material of contact surface, master cable side	gold-plated

Cable/line

Connection method	M23 plug connection

Environmental and real-life conditions

Ambient conditions

Degree of protection	IP65
	IP67
Ambient temperature (operation)	-20 °C ... 75 °C

Drawings

Dimensional drawing

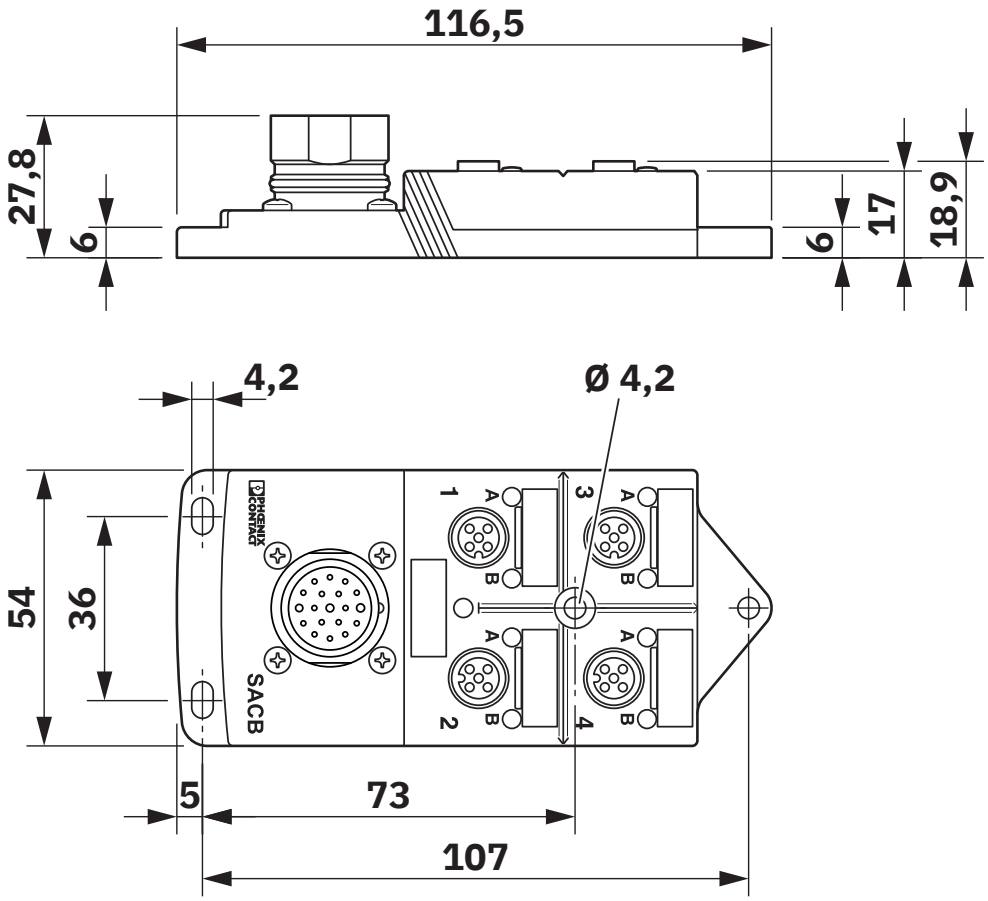

Schematic diagram

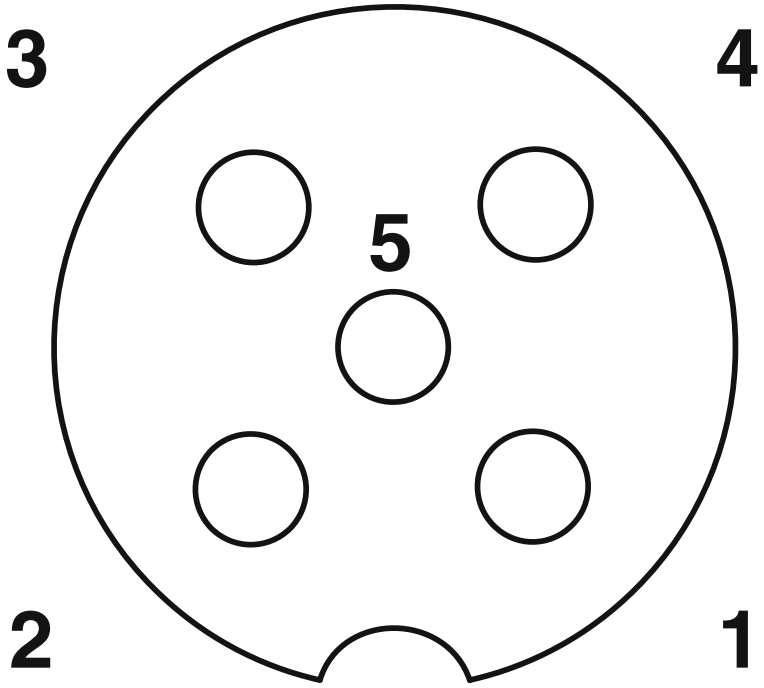

M12 slot, socket, 5-pos.

Schematic diagram

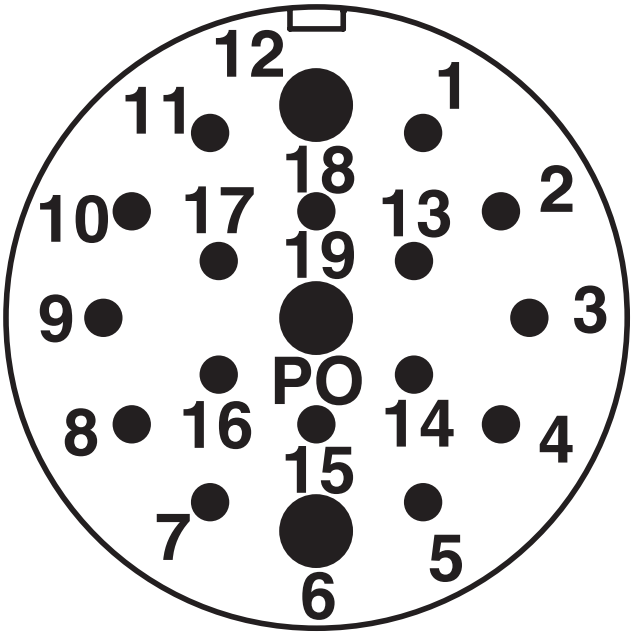

M23 plug connection pin, 19-pos.

Circuit diagram

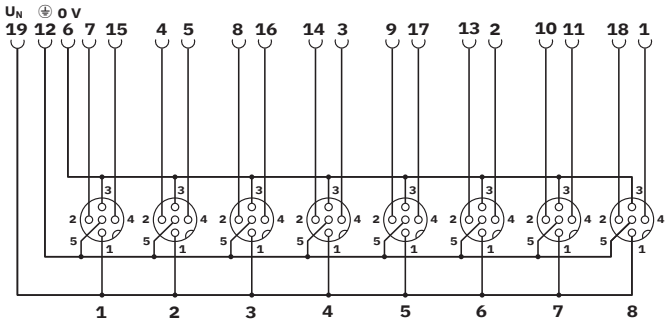

Approvals

To download certificates, visit the product detail page: https://www.phoenixcontact.com/nl/products/1692802

cUL Recognized
Approval ID: E118976

	Nominal voltage U_N	Nominal current I_N	Cross section AWG	Cross section mm^2
keine				
	120 V	-	22 - 16	-

UL Recognized
Approval ID: E118976

	Nominal voltage U_N	Nominal current I_N	Cross section AWG	Cross section mm^2
keine				
	120 V	-	22 - 16	-

Classifications

ECLASS

ECLASS-13.0	27440111
ECLASS-15.0	27440111

ETIM

ETIM 10.0	EC003558

UNSPSC

UNSPSC 21.0	31251500

Environmental product compliance

EU RoHS

Fulfills EU RoHS substance requirements	Yes
Exemption	6(c)

China RoHS

Environment friendly use period (EFUP)	EFUP-50
	An article-related China RoHS declaration table can be found in the download area for the respective article under "Manufacturer declaration". For all articles with EFUP-E, no China RoHS declaration table issued and required.

EU REACH SVHC

REACH candidate substance (CAS No.)	Lead(CAS: 7439-92-1)
SCIP	2f3d4e88-6468-4d22-b315-233192626ec9

Phoenix Contact 2026 © - all rights reserved
https://www.phoenixcontact.com

PHOENIX CONTACT B.V.
Hengelder 56 6902 PA Zevenaar
Postbus 246 6900 AE Zevenaar
(0316) 59 17 20
sales@phoenixcontact.nl