SLD 5.00/24/90G 3.2 SN OR BX

Weidmüller Interface GmbH & Co. KG
Klingenbergstraße 26
D-32758 Detmold
Germany

www.weidmueller.com

Product image

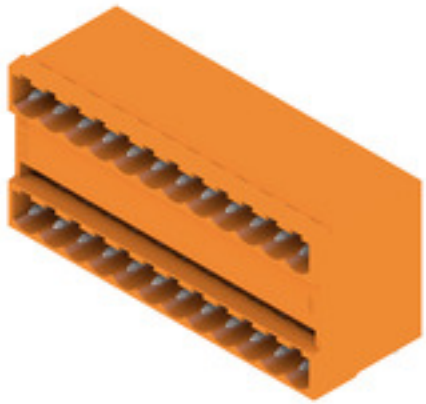

Similar to illustration

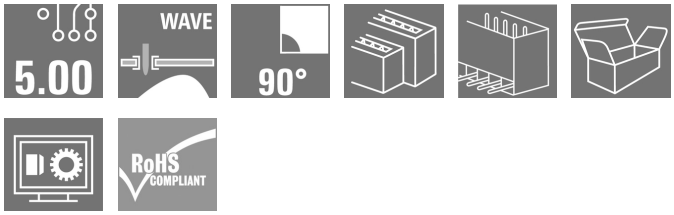

2-tier male header with parallel pin arrangement. The solder pin length is optimised for wave flow soldering. The pin headers provide space for labelling and can be coded.

General ordering data

Version	PCB plug-in connector, male header, closed side, THT solder connection, 5.00 mm, Number of poles: 24, 90°, Solder pin length (l): 3.2 mm, tinned, orange, Box
Order No.	1614450000
Type	SLD 5.00/24/90G 3.2 SN OR BX
GTIN (EAN)	4008190030780
Qty.	10 pc(s).
Product data	IEC: 400 V / 11 A UL: 300 V / 10 A
Packaging	Box

Creation date December 4, 2023 12:33:41 PM CET

SLD 5.00/24/90G 3.2 SN OR BX

Weidmüller Interface GmbH & Co. KG
Klingenbergstraße 26
D-32758 Detmold
Germany

www.weidmueller.com

Technical data

Dimensions and weights

Depth	22 mm	Depth (inches)	0.866 inch
Height	31.25 mm	Height (inches)	1.23 inch
Height of lowest version	28.05 mm	Width	61.96 mm
Width (inches)	2.439 inch	Net weight	23.7 g

System specifications

Product family	OMNIMATE Signal - series BL/SL 5.00	Type of connection	Board connection
Mounting onto the PCB	THT solder connection	Pitch in mm (P)	5 mm
Pitch in inches (P)	0.197 inch	Outgoing elbow	90°
Number of poles	24	Number of solder pins per pole	1
Solder pin length (l)	3.2 mm	Solder pin length tolerance	+0.1 / -0.2 mm
Solder pin dimensions	d = 1.2 mm, Octagonal	Solder pin dimensions = d tolerance	0 / -0,03 mm
Solder eyelet hole diameter (D)	1.3 mm	Solder eyelet hole diameter tolerance (D)	+ 0,1 mm
L1 in mm	55 mm	L1 in inches	2.165 inch
Number of rows	2	Pin series quantity	2
Touch-safe protection acc. to DIN VDE 57 106	finger-safe unplugged/ back-of-hand-safe plugged	Touch-safe protection acc. to DIN VDE 0470	IP20 plugged/ IP10 unplugged
Protection degree	IP20	Volume resistance	≤5 mΩ
Can be coded	Yes	Plugging force/pole, max.	3 N
Pulling force/pole, max.	3 N		

Material data

Insulating material	PBT	Colour	orange
Colour chart (similar)	RAL 2000	Insulating material group	IIIa
Comparative Tracking Index (CTI)	≥ 200	UL 94 flammability rating	V-0
Contact material	CuSn	Contact surface	tinned
Layer structure of solder connection	1...3 µm Ni / 2...4 µm Sn matt	Storage temperature, min.	-40 °C
Storage temperature, max.	70 °C	Operating temperature, min.	-50 °C
Operating temperature, max.	100 °C	Temperature range, installation, min.	-25 °C
Temperature range, installation, max.	100 °C		

Rated data acc. to IEC

tested acc. to standard	IEC 60664-1, IEC 61984	Rated current, min. number of poles (Tu=20°C)	11 A
Rated current, max. number of poles (Tu=20°C)	8.5 A	Rated current, min. number of poles (Tu=40°C)	9.5 A
Rated current, max. number of poles (Tu=40°C)	7 A	Rated voltage for surge voltage class / pollution degree II/2	400 V
Rated voltage for surge voltage class / pollution degree III/2	320 V	Rated voltage for surge voltage class / pollution degree III/3	250 V
Rated impulse voltage for surge voltage class/ pollution degree II/2	4 kV	Rated impulse voltage for surge voltage class/ pollution degree III/2	4 kV
Rated impulse voltage for surge voltage class/ contamination degree III/3	4 kV	Short-time withstand current resistance	1 x 1s with 120 A

SLD 5.00/24/90G 3.2 SN OR BX

Weidmüller Interface GmbH & Co. KG
Klingenbergstraße 26
D-32758 Detmold
Germany

www.weidmueller.com

Technical data

Rated data acc. to CSA

Institute (CSA)		Certificate No. (CSA)	200039-1121690
Rated voltage (Use group B / CSA)	300 V	Rated voltage (Use group D / CSA)	300 V
Rated current (Use group B / CSA)	10 A	Rated current (Use group D / CSA)	10 A
Reference to approval values	Specifications are maximum values, details - see approval certificate.		

Rated data acc. to UL 1059

Institute (UR)		Certificate No. (UR)	E60693
Rated voltage (Use group B / UL 1059)	300 V	Rated voltage (Use group D / UL 1059)	300 V
Rated current (Use group B / UL 1059)	10 A	Rated current (Use group D / UL 1059)	10 A
Reference to approval values	Specifications are maximum values, details - see approval certificate.		

Packing

Packaging	Box	VPE length	168 mm
VPE width	121 mm	VPE height	39 mm

Classifications

ETIM 6.0	EC002637	ETIM 7.0	EC002637
ETIM 8.0	EC002637	ETIM 9.0	EC002637
ECLASS 9.0	27-44-04-02	ECLASS 9.1	27-44-04-02
ECLASS 10.0	27-44-04-02	ECLASS 11.0	27-46-02-01
ECLASS 12.0	27-46-02-01	ECLASS 13.0	27460201

SLD 5.00/24/90G 3.2 SN OR BX

Weidmüller Interface GmbH & Co. KG
Klingenbergstraße 26
D-32758 Detmold
Germany

www.weidmueller.com

Technical data

Important note

IPC conformity	Conformity: The products are developed, manufactured and delivered according international recognized standards and norms and comply with the assured properties in the data sheet resp. fulfill decorative properties in accordance with IPC-A-610 "Class 2". Further claims on the products can be evaluated on request.
Notes	• Additional variants on request • Rated current related to rated cross-section & min. No. of poles. • Spacing between rows: see hole layout • P on drawing = pitch • Rated data refer only to the component itself. Clearance and creepage distances to other components are to be designed in accordance with the relevant application standards. • In accordance with IEC 61984, OMNIMATE-connectors are connectors without breaking capacity (COC). During designated use, connectors are not allowed to be engaged or disengaged when live or under load • Long term storage of the product with average temperature of 50 °C and maximum humidity 70%, 36 months

Approvals

Approvals	
ROHS	Conform
UL File Number Search	UL Website
Certificate No. (UR)	E60693

Downloads

Approval/Certificate/Document of Conformity	Declaration of the Manufacturer
Engineering Data	CAD data – STEP
Catalogues	Catalogues in PDF-format
Brochures	FL DRIVES EN MB DEVICE MANUF. EN FL DRIVES DE FL BUILDING SAFETY EN FL APPL LED LIGHTING EN FL INDUSTR.CONTROLS EN FL MACHINE SAFETY EN FL HEATING ELECTR EN FL APPL_INVERTER EN FL_BASE_STATION_EN FL ELEVATOR EN FL POWER SUPPLY EN FL 72H SAMPLE SER EN PO OMNIMATE EN PO OMNIMATE EN

SLD 5.00/24/90G 3.2 SN OR BX

Weidmüller Interface GmbH & Co. KG
Klingenbergstraße 26
D-32758 Detmold
Germany

www.weidmueller.com

Drawings

Product image

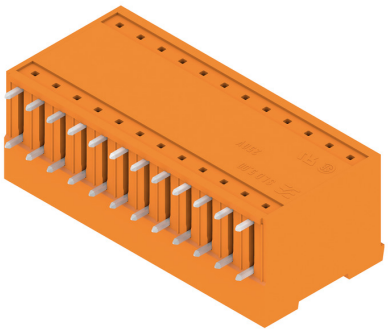

Dimensional drawing

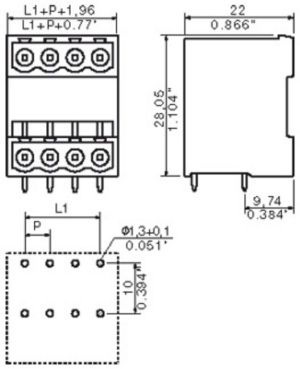

MASSE OHNE TOLERANZ SIND KEINE PRUEFMASSE
DIMS. WITHOUT TOLERANCE ARE NOT CONTROL DIMS.

DIE DEUTSCHE VERSION IST VERBINDLICH
THE GERMAN VERSION IS BINDING

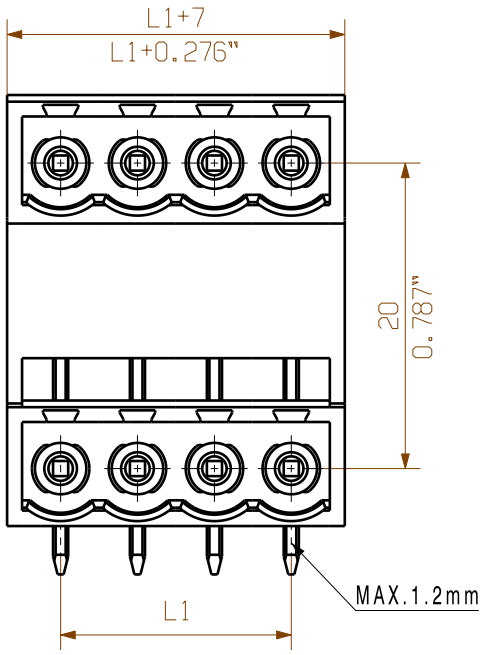

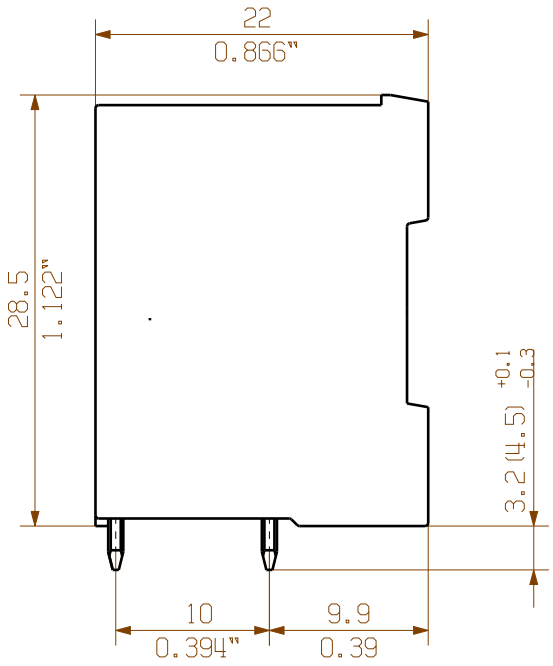

HOLE PATTERN

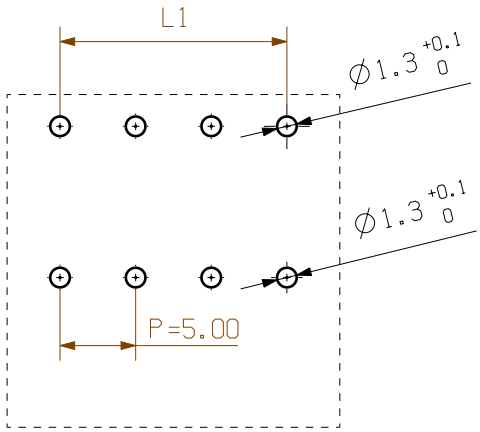

For the mounting of PCBs, it should be noted that the rated data relates only to the PCB components alone.
The neccessary creepage and clearance paths must be observed in connection with the respective applicant in accordance to IEC 664 / VDE 0110.
The current-carrying capacity and pitch tolerance is to be determined according to DIN IEC 326 part 3 very fine.

Weidmüller PCB components are tested to the DIN EN 61984 standard, and are valid for its field of application.
Provided that the components are used to the intended purpose, all requirements with respect to the occuring of electrical, mechanical, thermic and corrosive stress will be satisfied.

SHOWN:SLD 5.00/08/90G

M 1/1

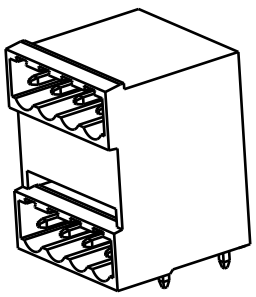

n	L1 [mm]	L1 [Inch]
48	115,00	4,531
46	110,00	4,334
44	105,00	4,137
42	100,00	3,940
40	95,00	3,743
38	90,00	3,546
36	85,00	3,349
34	80,00	3,152
32	75,00	2,955
30	70,00	2,758
28	65,00	2,561
26	60,00	2,364
24	55,00	2,167
22	50,00	1,970
20	45,00	1,773
18	40,00	1,576
16	35,00	1,379
14	30,00	1,182
12	25,00	0,985
10	20,00	0,788
8	15.00	0,591
6	10,00	0,394
4	5,00	0,197

RoHS COMPLIANT

METRIC TOLERANCES:
X. = ±0.3
X.X = ±0.1
X.XX = ±0.05

51665/0
05.10.10 HERTEL_S 01
MODIFICATION

CAT.NO.:.

Weidmüller

C 19817 09
DRAWING NO. ISSUE NO.
SHEET 01 OF 01 SHEETS

	DATE	NAME
DRAWN	15.12.2009	HELIS_MA
RESPONSIBLE		HERTEL_S
CHECKED	08.10.2010	HECKERT_M
APPROVED		HECKERT_M

SCALE: 2/1
SUPERSEDES: .

SLD 5.00/../90G....
STIFTLEISTE
PIN HEADER

PRODUCT FILE: SLD 5.00 7303

WEITERGABE SOWIE VERVIELFAELTIGUNG DIESES DOKUMENTS, VERWERTUNG UND MITTEILUNG SEINES INHALTS SIND VERBOTEN, SOWEIT NICHT AUSDRUECKLICH GESTATTET.
ZUWIDERHANDLUNGEN VERPFLICHTEN ZU SCHADENERSATZ. ALLE RECHTE FUER DEN FALL DER PATENT-, GEBRAUCHSMUSTER- ODER GESCHMACKSMUSTEREINTRAGUNG VORBEHALTEN.
THE REPRODUCTION, DISTRIBUTION AND UTILIZATION OF THIS DOCUMENT AS WELL AS THE COMMUNICATION OF ITS CONTENTS TO OTHERS WITHOUT EXPLICID AUTHORIZATION IS PROHIBITED.
OFFENDERS WILL BE HELD LIABLE FOR THE PAYMENT OF DAMAGES. WEIDMUELLER EXCLUSIVELY RESERVES THE RIGHT TO FILE FOR PATENTS, UTILITY MODELS OR DESIGNS.
© WEIDMUELLER INTERFACE GmbH & Co.KG

Wave Solder Profile

Recommended wave solderding profiles

Weidmüller Interface GmbH & Co. KG
Klingenbergstraße 16
D-32758 Detmold
Germany
Fon: +49 5231 14-0
Fax: +49 5231 14-292083
www.weidmueller.com

Single Wave:

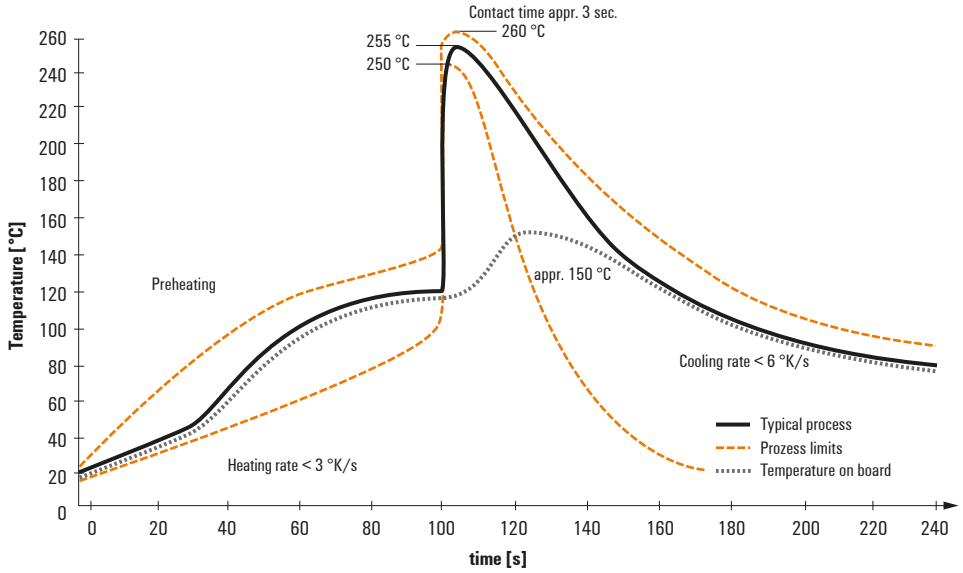

Double Wave:

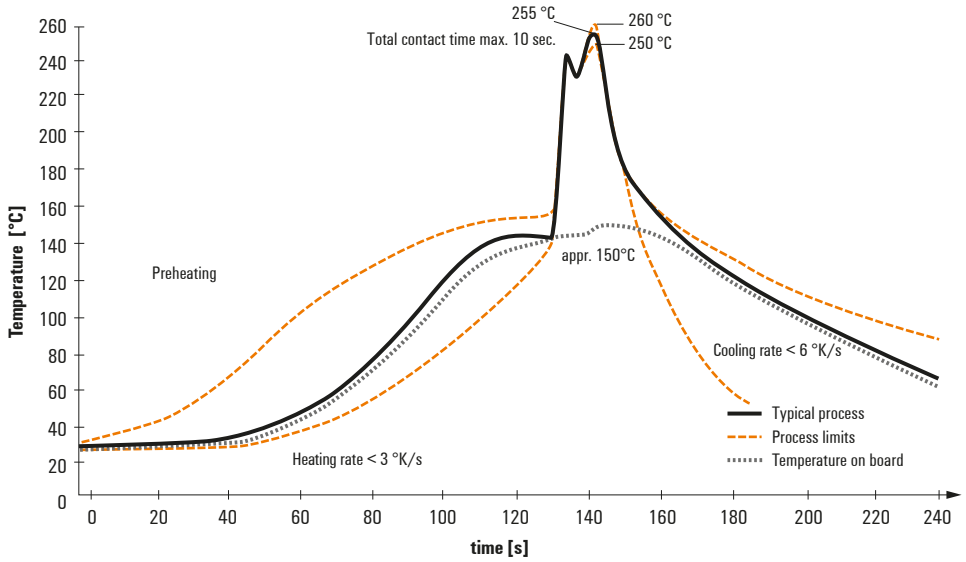

Wave soldering profiles

Wired connection elements should be processed in accordance with the DIN EN 61760-1 standard. We have included two recommendations for practical wave soldering profiles, with which Weidmüller PCB terminals and connectors are qualified.

When choosing a suitable profile for your application, the following factors also need to be considered:
- PCB thickness
- Proportion of Cu in the layers
- Single/double-sided assembly
- Product range
- Heating and cooling rates

The single and double wave profiles each indicate the recommended operating range, including the maximum soldering temperature of 260°C. In practice, the maximum soldering temperature is quite often well below the above maximum profile.

We reserve the right to make technical changes.