153226-1 ✔ ACTIVE

MATE-N-LOK | Commercial MATE-N-LOK

TE Internal #: 153226-1

Tin (Sn), Pin Contact, 14 – 12 AWG, 250 VAC, 2.08 – 3.5 mm² Wire, Locking Lance Contact Retention, Crimp, Brass, Power, Commercial MATE-N-LOK

View on TE.com >

Connectors > Contacts > Connector Contacts

Contact Type: **Pin**

Contact Mating Area Plating Material: **Tin (Sn)**

Wire Contact Termination Area Plating Material: **Pre-Tin**

Operating Voltage: **250 VAC**

Contact Retention Within Housing: **With**

Features

Electrical Characteristics

Operating Voltage	250 VAC

Contact Features

Contact Type	Pin
Contact Mating Area Plating Material	Tin (Sn)
Wire Contact Termination Area Plating Material	Pre-Tin
Contact Retention Within Housing	With
Contact Base Material	Brass
Contact Current Rating (Max)	15 A
Mating Pin Diameter	3 mm[.118 in]
Wire Contact Termination Area Plating Thickness	4 µm[157.48 µin]
Wire Contact Termination Area Plating Material Finish	Bright
Contact Orientation	Straight

Termination Features

Termination Method to Wire & Cable	Crimp

Product Terminates To	Wire & Cable

Mechanical Attachment

Contact Retention Type Within Housing	Locking Lance
Wire Insulation Support	Without

Dimensions

Wire Size	2.08 – 3.5 mm²
Compatible Insulation Diameter Range	3.05 – 4.32 mm[.12 – .17 in]

Usage Conditions

Operating Temperature Range	-55 – 105 °C[-67 – 221 °F]

Operation/Application

Circuit Application	Power

Packaging Features

Packaging Method	Reel

Product Compliance

For compliance documentation, visit the product page on TE.com>

EU RoHS Directive 2011/65/EU	Compliant
EU ELV Directive 2000/53/EC	Compliant
China RoHS 2 Directive MIIT Order No 32, 2016	No Restricted Materials Above Threshold
EU REACH Regulation (EC) No. 1907/2006	Current ECHA Candidate List: JUNE 2025 (250) Candidate List Declared Against: JUNE 2025 (250) Does not contain REACH SVHC
Halogen Content	Low Halogen - Br, Cl, F < 900 ppm per homogenous material. Also BFR/CFR/PVC Free
Solder Process Capability	Not applicable for solder process capability

Product Compliance Disclaimer

This information is provided based on reasonable inquiry of our suppliers and represents our current actual knowledge based on the information they provided. This information is subject to change. The part numbers that TE has identified as EU RoHS compliant have a maximum concentration of 0.1% by weight in homogenous materials for lead, hexavalent chromium, mercury, PBB, PBDE, DBP, BBP, DEHP, DIBP, and 0.01% for cadmium, or qualify for an exemption to these limits as defined in the Annexes of Directive 2011/65/EU (RoHS2). Finished electrical and electronic equipment products will be CE marked as required by Directive 2011/65/EU. Components may not be CE marked. Additionally, the part numbers that TE has identified as EU ELV compliant have a maximum concentration of 0.1% by weight in homogenous materials for lead, hexavalent chromium, and mercury, and 0.01% for cadmium, or qualify for an exemption to these limits as defined in the Annexes of Directive 2000/53/EC (ELV). Regarding the REACH Regulation, the information TE provides

on SVHC in articles for this part number is based on the latest European Chemicals Agency (ECHA) 'Guidance on requirements for substances in articles' posted at this URL: https://echa.europa.eu/guidance-documents/guidance-on-reach

Compatible Parts

TE Part # 1-480271-0
06P CMNL CAP HSG M/M NATL

TE Part # 1-480319-9
02P CMNL CAP HSG F/H BLK

TE Part # 1-480351-2
01P CMNL CAP HSG RED

TE Part # 1-480498-1
02P CMNL CAP HSG F/H BLK

TE Part # 1-480288-0
12P CMNL CAP HSG M/M NATL

TE Part # 1-480305-9
03P CMNL CAP HSG F/H BLK

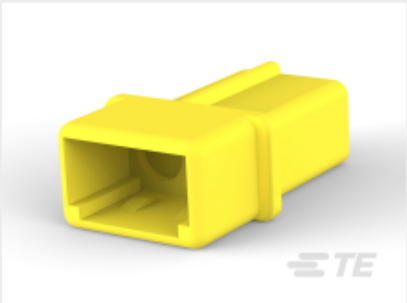

TE Part # 1-480319-4
02P CMNL CAP HSG F/H YELL

TE Part # 794048-1
08P CMNL CAP HSG D/L

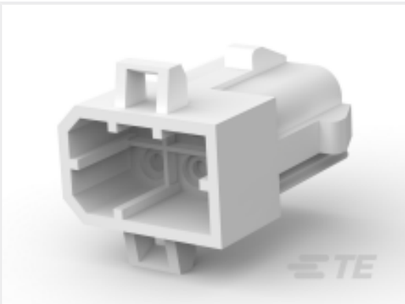

TE Part # 171383-1
6 CIRCUIT M-N-L CAP

TE Part # 3-480426-0
04P CMNL CAP HSG, H-TEMP

TE Part # 2-151679-0
2 WAY MATE-N-LOK PIN HSG.NAT.A

TE Part # 1-480349-0
01P CMNL PLUG HSG F/H NATL

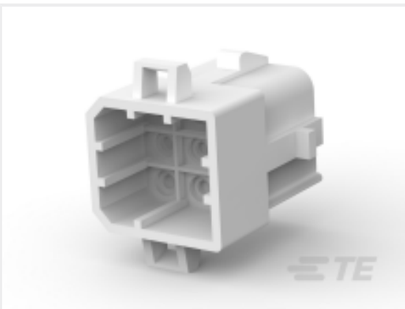

TE Part # 171268-1
CIRCUIT HOUSING CAP

TE Part # 1-480286-0
10P CMNL CAP HSG M/M NATL

TE Part # 1-480351-0
01P CMNL CAP HSG NATL

TE Part # 1-480387-0
03P CMNL CAP HSG F/H BLK

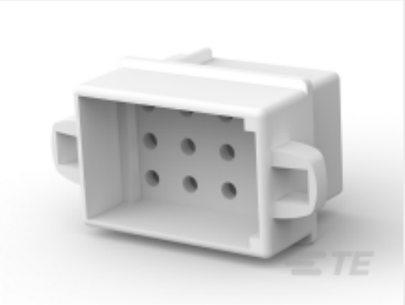

TE Part # 1-480278-0
12P CMNL CAP HSG P/M NATL

TE Part # 925075-6
4W CIRCULAR MATE-N-LOK PIN HSG NAT

TE Part # 794132-1
04P CMNL CAP HSG

TE Part # 1-480305-2
03P CMNL CAP HSG F/H RED

Also in the Series | Commercial MATE-N-LOK

Connector Caps & Covers(2)

Connector Contacts(150)

Connector Seals & Cavity Plugs(1)

Insertion & Extraction Tools(3)

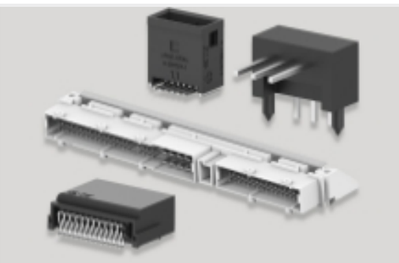

PCB Headers & Receptacles(55)

Power Contacts(146)

Rectangular Power Connectors(181)

Standard Circular Connectors(2)

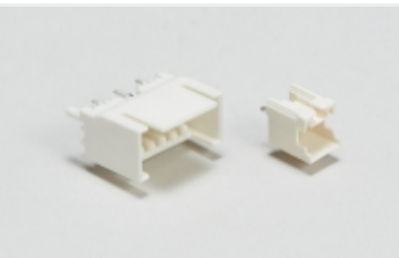

Wire-to-Board Headers & Receptacles (55)

Customers Also Bought

TE Part #5-146280-2
02 MODII HDR SRST B/A .100CL

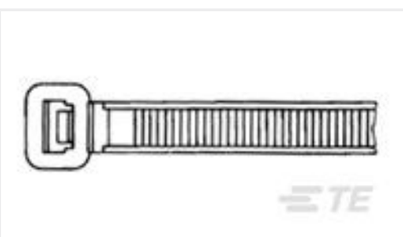

TE Part #2-160975-2
CABLE TY 200X4.8 BLA

TE Part #2-1437565-7
FSM2JSMA=SMT,TACTILE,PB SWITCH

TE Part #1622866-1
CRG0603 1% 1K0

TE Part #1623426-1
CRG1206 1% 150K

TE Part #1676233-2
RN 0805 1K47 0.1% 10PPM 1KRL

TE Part #1825910-2
FSM2JH=6MM TACT SWITCH, HIGH TEMP

TE Part #1-2176089-7
RP 1J 0.166W 16K2 0.1% 25PPM 1K RL

TE Part #5103308-1
A/L LOW PRO HDR 10P VERT BLACK

TE Part #2-160971-1
CABLE TY 140X3.6 NAT

Documents

Product Drawings

3 M/M LANCED PIN

English

CAD Files

3D PDF

3D

Customer View Model

ENG_CVM_CVM_153226-1_N.2d_dxf.zip

English

Customer View Model

ENG_CVM_CVM_153226-1_N.3d_igs.zip

English

Customer View Model

ENG_CVM_CVM_153226-1_N.3d_stp.zip

English

By downloading the CAD file I accept and agree to the Terms and Conditions of use.

Product Specifications

Application Specification

English