cannon

# Interconnect Solutions for e-mobility

## IEC, SAE and GB/T

ITT

# We Connect

## The future of e-mobility

Drawing upon 100 years of interconnect excellence and nearly a decade of innovation in the Electric Vehicle industry, ITT represents a committed partner to today's e-mobility industry, bringing connection solutions to the market that are truly Engineered for Life.

## Global solutions for the EV industry

### The ITT difference

- Proven application expertise
- Global capabilities & local support
- Unrivalled customization expertise
- A committed innovator & business partner

About ITT

ITT is a diversified leading manufacturer of highly engineered critical components and customized technology solutions for the energy, transportation and industrial markets. Building on its heritage of innovation, ITT partners with its customers to deliver enduring solutions to the key industries that underpin our modern way of life. Founded in 1920, ITT is headquartered in Stamford, Connecticut, with employees in more than 35 countries and sales in a total of approximately 125 countries.
For more information visit itt.com

# IEC, SAE and GB/T e-mobility Interconnect Solutions

ITT's class leading UL and CE certified connectors, plugs, inlets, outlets and accessories offer recognized, trusted and proven charging solutions for today's e-mobility markets. Built in accordance with all key regional standards - IEC 62196 for Europe, SAE J1772 for the Americas and Japan and GB/T 20234 for China they provide a truly global portfolio.

ITT offers a fully comprehensive range of AC charging options– with an industry leading amperage range from 10A to 80A, single and triple phase variants, low contact resistance and a minimum of 10k mating cycles. In addition to off-the-shelf solutions our EV offering is fully customizable to meet specific requirements and we are able to offer variants on colors, harnesses and terminals.

By using common coupler connector/plug elements such as an ergonomically designed handle, robust contact system, innovative wire positioners and strain relief system ITT is able to serve global industry players with a consistent, recognizable look and feel to support their own product, user and brand experience.

## Key features

- Up to 80A AC charging option
- Sealing to meet and exceed specifications
- Cable options certified and approved to regional requirements
- Low contact resistance
- Minimum 10k mating cycles
- Connector and plug strain relief provides protection from cable overstressing

## An e-mobility leader

- A truly global product portfolio
- Extensive customization options
- A track record of EV innovation
- A pioneer in DC fast charging technology

## Applications

- Home EV charging units
- Public charging stations
- Roadside assistance trucks
- Fleet trucks
- EV mass transit vehicles
- Electric watercraft
- Passenger vehicles
- Electric motorcycles
- Electric agriculture vehicles

Dimensions shown in mm
Specifications and dimensions subject to change

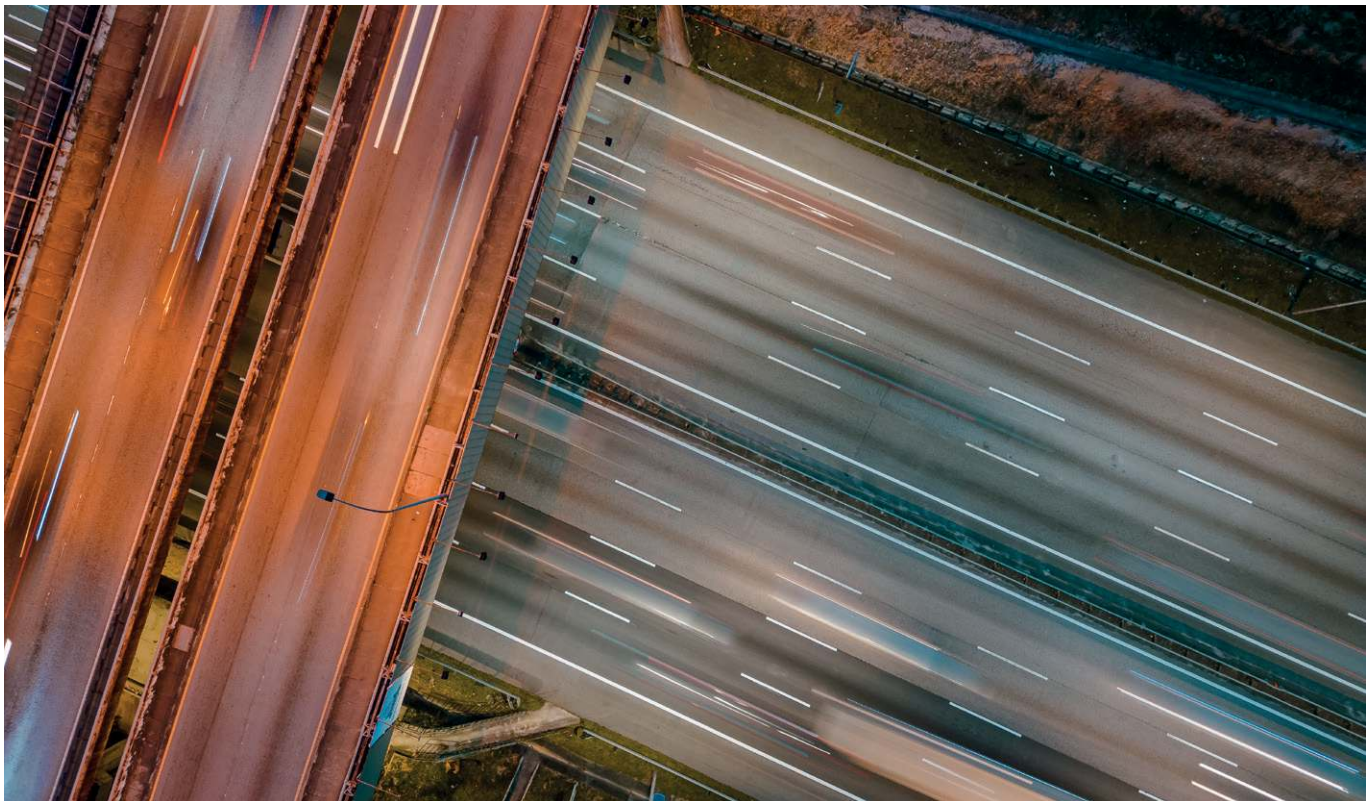

# IEC Gen 3 electric vehicle charging solutions

ITT's IEC e-mobility solutions are built in accordance with IEC 62196-1 and IEC 62196-2 standards for AC single and three phase charging systems.

| IEC performance data | |
|---|---|
| **Temperature range** | -30°C to +50°C |
| **Durability** | 10,000 mating cycles minimum |
| **Sealing requirements** | IP 44 min per IEC 61851-1 and tested in accordance with IEC 60529 |
| **Certifications connector** | CE, UKCA, VDE, DIN EN 62196-1 and DIN EN 62196-2 |
| **Certifications cable** | EN 50620 |

## Key features

- UV resistance with black matte handle surface
- Enhanced design eliminates screw visibility
- Textured coupler connector/plug handle – provides enhanced grip while in use.
- Compact and ergonomic for ease of use by consumers
- Optional mating face protection – lanyard dust caps options for coupler connector/plug and spring cap options for inlets provide additional protection when connectors are not in use.
- Rapid installation for charging station manufactures with enhanced cable design

## ACI3 Coupler for IEC

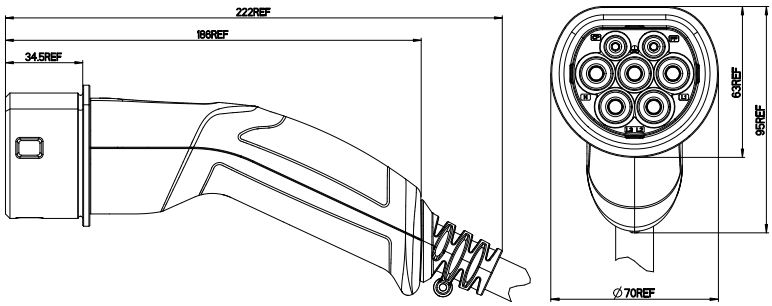


## ACI3-J2 Connection Cable

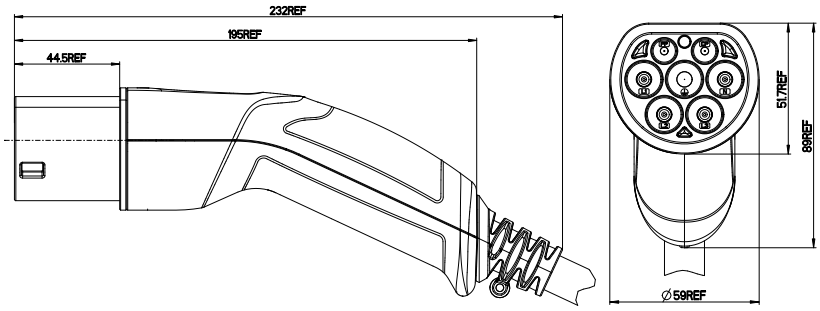


## How to order

| AC | I | 3 | -T2 | 032 | -1 | BK | -017 | A | -1 | A | 1 | -001 |
|---|---|---|---|---|---|---|---|---|---|---|---|---|

- Connector Series
- Regional Certification Code
- Generation
- Type
- Amperage
- Phase
- Handle Color
- Cable Length
- Cable Type
- Contact System
- Sealing
- Dust Cap
- Modification Code

## Explanation

**Connector Series**
**AC** - IEC AC Connector

**Regional Certification Code**
**I** - DIN EN 62196-2 certified at VDE

**Generation**
**3** - Generation 3

**Type**
**J2** - Connection cable Mode 3 Case B; Type 2-Type 2
**T2** - Tethered lead Mode 3 Case C; Type 2

**Amperage**
**020** - 20 Ampere
**032** - 32 Ampere
**063** - 63 Ampere

**Phase**
**1** - Single phase (250VAC)
**3** - Three phase (480VAC)

**Color**
**BK** - Black

**Cable Length**
**017** - Length option in 0.1m (example 017=1.7m)

**Cable Type**
**A** - Standard cable assembly

**Contact System**
**1** - Pin contacts and / or slotted socket contacts

**Sealing**
**A** - According to standard (IP24/44)

**Dust Cap**
**1** - No dust cap
**2** - Rubber dust cap with PA rope

**Modification Code**
Contact the factory for modifications

Dimensions shown in mm
Specifications and dimensions subject to change

## ECIER Outlet

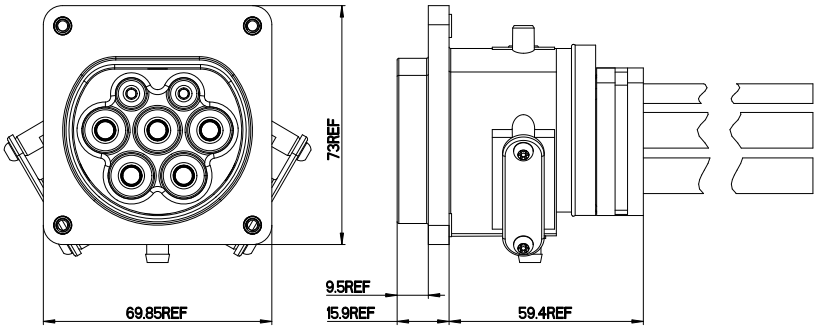


## How to order

| ECIER | 20 | 2 | 1 | -017 | S | 2 | A | 1 | A | 0 | A | 0 | -001 |
|---|---|---|---|---|---|---|---|---|---|---|---|---|---|

- Connector Series & Style
- Current Rating (cable size)
- Cable Rating
- Powering System (connector voltage rating)
- Cable Length (3 digits)
- Sealing Method
- Compression Limiter / Metal Inserts in Flange Holes
- Dust cap / Spring cap
- Drain Spout
- Locking Device
- Rubber Boot
- Mounting hole pattern
- Flange Gasket
- Modification Code - if applicable (3 digits)

## Explanation

**Connector Series & Style**
**ECIER** - EVC IEC 62196 Type 2 Connector EVSE Rear mount inlet

**Current Rating (cable size)**
**020** - 20 Ampere
**032** - 32 Ampere
**063** - 63 Ampere

**Cable Rating**
**2** - Level 2

**Powering System (connector voltage rating)**
**1** - Single phase (250VAC)
**3** - Three phase (480VAC)

**Cable Length (3 digits)**
**XXX** - Length in 0.1m*XXX (017 = 1.7m)

**Sealing Method**
**S** - Sealed

**Compression Limiter / Metal Inserts in Flange Holes**
**0** - Without compression limiter/inserts
**1** - Compression limiter (front mounting)
**2** - Compression limiter with threaded inserts M4 (front mounting)

**Dust Cap / Spring Cap**
**A** - No dust cap supplied
**C** - Dust cap stainless steel lanyard (155mm)
**D** - Dust cap stainless steel lanyard (125mm)
**E** - Dust cap PA lanyard (155mm)
**K** - With mounting ring thin (to be used with mounting hole pattern "B" only) (metal inserts M4)
**L** - With mounting ring (to be used with mounting hole pattern "B" only) (metal inserts M4)
**M** - Dust cap PA lanyard, ring terminal (125mm)
**N** - Dust cap PA lanyard (125mm)

**Drain Spout**
**0** - Drain hole without hose nipple
**1** - with hose nipple
**2** - With hose nipple, with PVDV tube length 1m
**3** - With hose nipple, with PVDV tube length 2m

**Locking Device**
**A** - No locking device
**B** - Motorized switch assembly (No male connector supplied for locking).
**C** - Motorized switch assembly including connector & 300mm cable
**D** - Motorized switch assembly including connector & 300mm cable & socket contacts on single wires
**E** - Solenoid 12VDC assembly (cable length 250mm)
**F** - Solenoid 24VDC assembly (cable length 250mm)
**G** - Solenoid 12VDC assembly (same as cable length)
**H** - Solenoid 24VDC assembly (same as cable length)

**Rubber Boot**
**0** - No rubber boot supplied

**Mounting Hole Pattern**
**B** - 58 x 61mm (width x height)
**C** - 52 x 52mm (width x height)

**Flange Gasket**
**0** - No flange gasket supplied.
**1** - With flange gasket

**Modification Code - if applicable (3 digits)**
Contact the factory for modifications

## ECIV Inlet

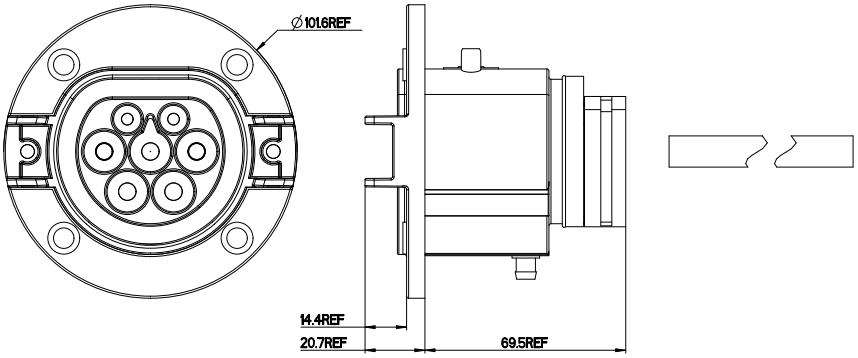


## How to order

| ECIV | 20 | 2 | 1 | -017 | S | 1 | A | 1 | A | 0 | A | 0 | -001 |
|---|---|---|---|---|---|---|---|---|---|---|---|---|---|

- Connector Series & Style
- Current Rating (cable size)
- Cable Rating
- Powering System (connector voltage rating)
- Cable Length (3 digits)
- Sealing Method
- Compression Limiter / Metal Inserts in Flange Holes
- Dust Cap / Spring cap
- Drain Spout
- Locking Device
- Rubber Boot
- Mounting hole pattern
- Flange Gasket
- Modification Code - if applicable (3 digits)

## Explanation

**Connector Series & Style**
**ECIV** - EVC IEC 62196 Type 2 Connector vehicle inlet

**Current Rating (cable size)**
**020** - 20 Ampere
**032** - 32 Ampere
**063** - 63 Ampere

**Cable Rating**
**2** - Level 2

**Powering System (connector voltage rating)**
**1** - Single phase (250VAC)
**3** - Three phase (480VAC)

**Cable Length (3 digits)**
**XXX** - Length in 0.1m*XXX (017 = 1.7m)

**Sealing Method**
**S** - Sealed

**Compression Limiter / Metal Inserts in Flange Holes**
**0** - Without compression limiter/inserts
**1** - Compression limiter (front mounting)
**2** - Compression limiter with threaded inserts M4 (front mounting)
**3** - Compression limiter with threaded inserts M5 (front mounting)

**Dust Cap / Spring Cap**
**A** - No dust cap supplied
**C** - Dust cap stainless steel lanyard (155mm)
**D** - Dust cap stainless steel lanyard (125mm)
**E** - Dust cap PA lanyard (155mm)
**G** - With spring cap (opening to left)
**H** - With spring cap (opening to the right)
**M** - Dust cap PA lanyard, ring terminal (125mm)
**N** - Dust cap PA lanyard (125mm)

**Drain Spout**
**0** - Drain hole without hose nipple
**1** - with hose nipple
**2** - With hose nipple, with PVDV tube length 1m
**3** - With hose nipple, with PVDV tube length 2m

**Locking Device**
**A** - No locking device
**B** - Motorized switch assembly (No male connector supplied for locking device)
**C** - Motorized switch assembly including connector and 300mm cable
**D** - Motorized switch assembly including connector and 300mm cable & socket contacts on single wires

**Rubber Boot**
**0** - No rubber boot supplied

**Mounting Hole Pattern**
**A** - Standard pattern, 60 x 60mm

**Flange Gasket**
**0** - No flange gasket supplied
**1** - Flange gasket

**Modification Code - if applicable (3 digits)**
Contact the factory for modifications

Dimensions shown in mm
Specifications and dimensions subject to change

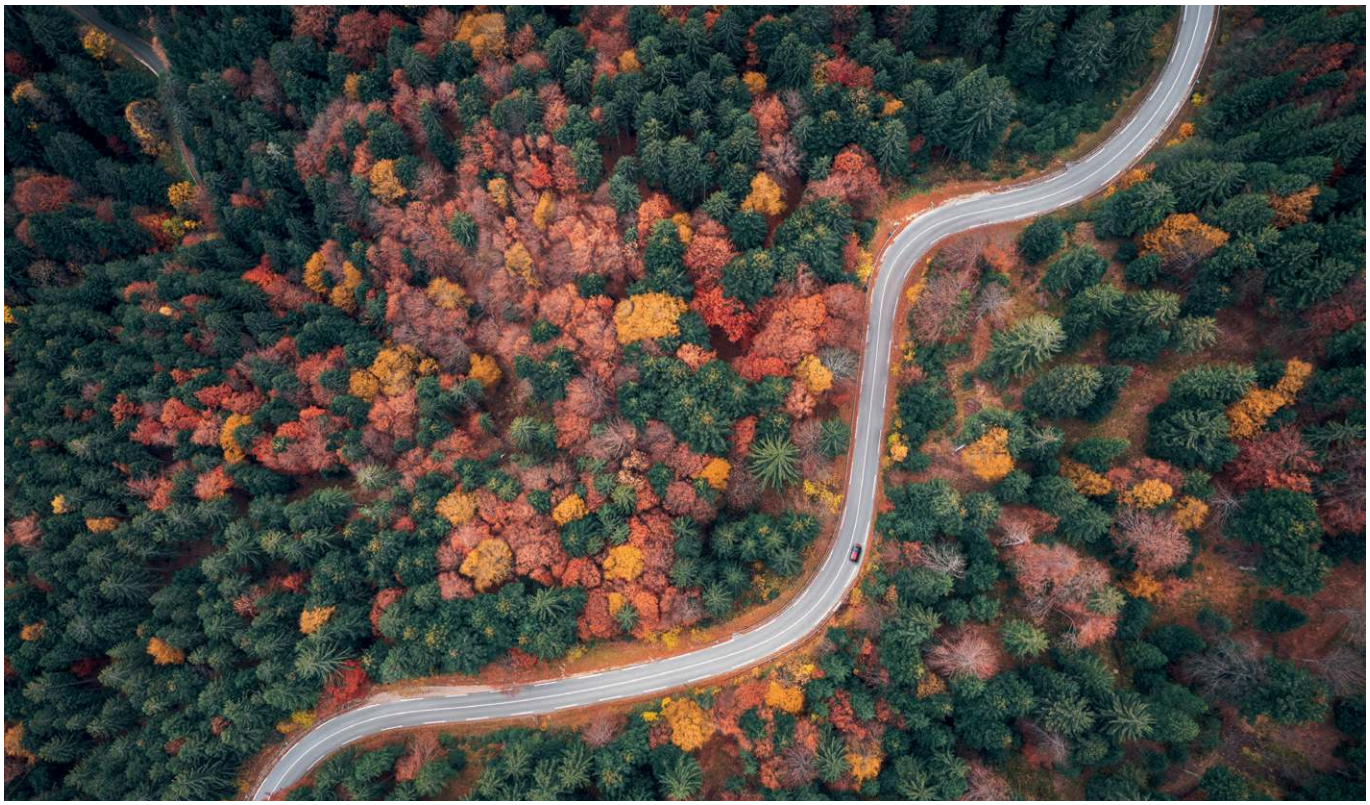

# SAE J1772 Gen 3 electric vehicle charging solutions

ITT's Gen 3 SAE J1772 couplers are sealed up to IP67 and built in accordance with SAE standard for AC level 1 and Level 2 charging systems.

| J1772 performance data | |
|---|---|
| **Temperature range** | -30°C to +50°C |
| **Durability** | 10,000 mating cycles minimum |
| **Sealing requirements** | IP67, meets UL50, type 3R/3S |
| **Certifications connector** | UL File E531874, PSE-JET on request |
| **Certifications cable** | UL62, JET on request |

## Key features

- IP67 sealing
- Integrated, one piece latching button providing water and freeze resistance
- Cable handling system not required with flexible, split wire cable design reducing cable diameter and weight
- Optional cold flex material for low temperature regions
- Optional mating face protection – one piece rubber dust caps options for coupler connector/plug provide additional protection when connectors are not in use.

## AC Connector for J1772

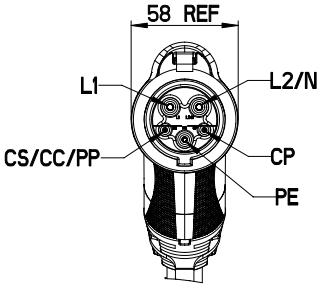


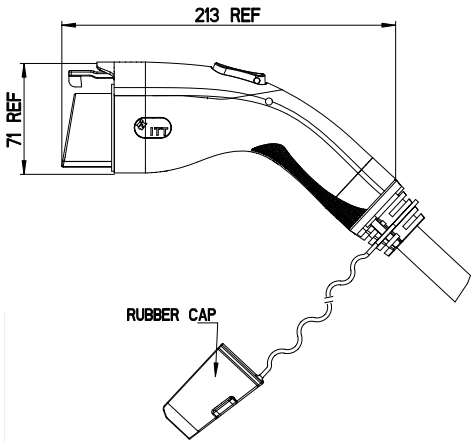


## How to order

| AC | S | 3 | T1 | 048 | 1 | BK | 017 | C | 2 | C | 1 | |
|---|---|---|---|---|---|---|---|---|---|---|---|---|

- Connector Series
- Regional Certification Code
- Generation
- Type
- Amperage
- Level
- Handle Color
- Cable Length
- Cable Type
- Contact System
- Sealing
- Dust Cap
- Modification Code

## Explanation

**Connector Series**
**AC** - SAE-J1772 AC Connector vehicle coupler

**Regional Certification Code**
**S** - SAE J1772:2017 & 2251:2017 certified at UL
**P** - PSE / JET7558-43006-1001:2019 certified

**Generation**
**3** - Generation 3

**Type**
**T1** - Tethered lead mode 3 case C type 1

**Amperage**
**032** - 32 AMP
**040** - 40 AMP
**048** - 48 AMP
**052** - 52 AMP (cable type "C" only)
**080** - 80 AMP

**Level**
**1** - Level 1 (120V)
**2** - Level 2 (240V)

**Color**
**BK** - Black
**GY** - Grey

**Cable Length**
**017** - Length option in 0.1m (example 017=1.7m)

**Cable Type**
**A** - Standard cable assembly
**B** - Cold flex cable for low temperature regions
**C** - Split wire cable - 2 hot wires and 2 neutral
**D** - Coiled cable*

**Contact System**
**2** - Lamella hyperboloid contacts

**Sealing**
**C** - IP67

**Dust Cap**
**1** - No dust cap
**3** - One-piece rubber dust cap

**Modification Code**
Contact the factory for modifications

*consult factory

Dimensions shown in mm
Specifications and dimensions subject to change

## J2IV Inlet

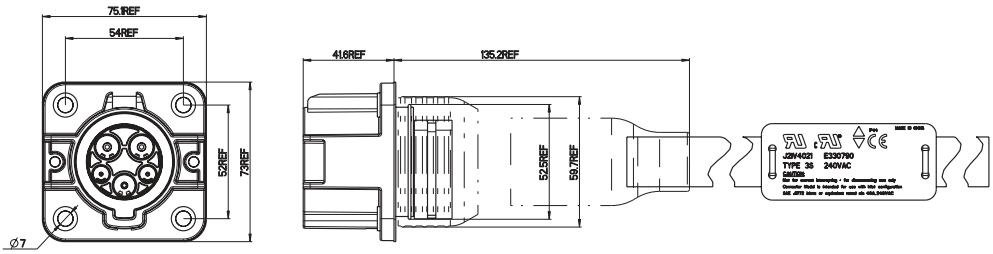


## How to order

| J2IV | 20 | 2 | 1 | -17 | S | 1 | A | 0 | A | 0 | A | 0 | -001 |
|---|---|---|---|---|---|---|---|---|---|---|---|---|---|

- Connector Series & Style
- Current Rating (cable size)
- Cable Rating
- Powering System (connector voltage rating)
- Cable Length (2 digits)
- Sealing Method
- Compression Limiter / Metal Inserts in Flange Holes
- Dust Cap / Spring cap
- Drain Spout
- Locking Device
- Rubber Boot
- Mounting hole pattern
- Flange Gasket
- Modification Code - if applicable (3 digits)

## Explanation

**Connector Series & Style**
**J2IV** - EVC SAE-J1772 Connector vehicle inlet

**Current Rating (cable size)**
**20** - 20A
**40** - 40A (level 2 only)
**75** - 75A (level 2 only)
**80** - 80A (level 2 only)

**Cable Rating**
**1** - Level 1
**2** - Level 2

**Powering System (connector voltage rating)**
**1** - Single phase (120V AC for level 1, 240VAC for levels 2)

**Cable Length (2 digits)**
**XX** - Length in ft. (17 = 17ft)

**Sealing Method**
**S** - Sealed

**Compression Limiter / Metal Inserts in Flange Holes**
**0** - Without compression limiter/inserts
**1** - Compression limiter (front mounting)
**3** - Compression limiter with threaded inserts M5 (front mounting)

**Dust Cap / Spring Cap**
**A** - No dust cap supplied
**G** - With spring cap (opening to left)
**H** - With spring cap (opening to right)

**Drain Spout**
**0** - Without drain spout

**Locking Device**
**A** - No locking device

**Rubber Boot**
**0** - No rubber boot supplied

**Mounting Hole Pattern**
**A** - Standard pattern

**Flange Gasket**
**0** - No flange gasket supplied
**1** - Flange gasket

**Modification Code - if applicable (3 digits)**
**001 to 999** - For customer specific modification

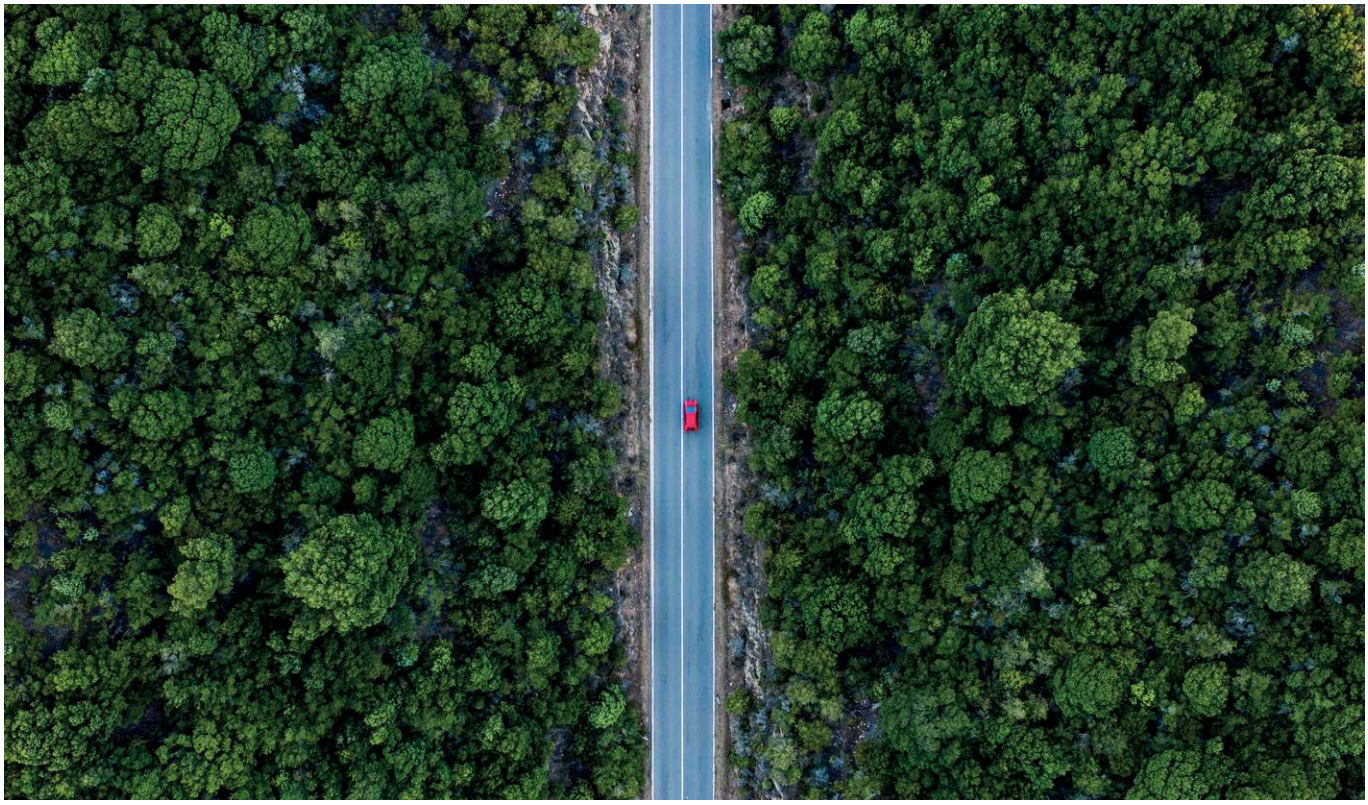

# GB/T electric vehicle charging solutions

ITT's GB e-mobility solutions are built in accordance with GB-T 20234 standards for charging systems.

| GB performance data | |
|---|---|
| **Temperature range** | -30°C to +50°C |
| **Durability** | 10,000 mating cycles minimum |
| **Sealing requirements** | IP54/IP55 |
| **Certifications connector** | CQC 13029087619 |
| **Certifications cable** | CQC 1103 or 1104 |

## Key features

- Drain holes at the bottom of the coupler connector/plug – eliminates latch freezing and includes protective shield from small diameter metal penetration to the wiring.
- Textured coupler connector/plug handle – provides enhanced grip while in use.
- Optional mating face protection – lanyard dust caps options for coupler connector/plug and spring cap options for inlets provide additional protection when connectors are not in use.

Dimensions shown in mm
Specifications and dimensions subject to change

## GBIE Outlet

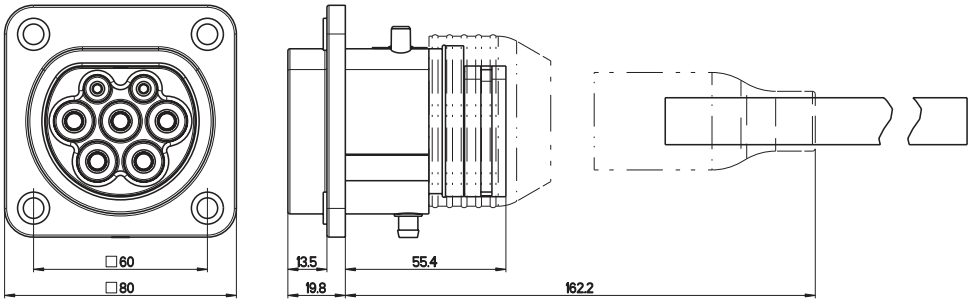


## How to order

| GBIE | 16 | 2 | 1 | -017 | S | 0 | A | 1 | A | 0 | A | 0 | -001 |
|---|---|---|---|---|---|---|---|---|---|---|---|---|---|

- Connector Series & Style
- Current Rating (cable size)
- Cable Rating
- Powering System (connector voltage rating)
- Cable Length (3 digits)
- Sealing Method
- Compression Limiter / Metal Inserts in Flange Holes
- Dust Cap / Spring cap
- Drain Spout
- Locking Device
- Rubber Boot
- Mounting Hole Pattern
- Flange Gasket
- Modification Code - If applicable (3 digits)

## Explanation

**Connector Series & Style**
**GBIE** - EVC GB/T 20234 Connector EVSE inlet

**Current Rating (cable size)**
**10** - 10A (1 phase only)
**16** - 16A
**32** - 32A

**Cable Rating**
**2** - Level 2

**Powering System (connector voltage rating)**
**1** - Single phase (250VAC)
**3** - Three phase (440VAC)

**Cable Length (3 digits)**
**XXX** - Length in 0.1m*XXX (017 = 1.7m)

**Sealing Method**
**S** - Sealed

**Compression Limiter / Metal Inserts in Flange Holes**
**0** - Without compression limiter/inserts
**1** - Compression limiter (front mounting)
**3** - Compression limiter with threaded inserts M5 (front mounting)

**Dust Cap / Spring Cap**
**A** - No dust cap supplied
**C** - Dust cap stainless steel lanyard (155mm)
**D** - Dust cap stainless steel lanyard (125mm)
**E** - Dust cap PA lanyard (155mm)
**F** - Dust cap without lanyard, Sealing on OD
**M** - Dust Cap PA Lanyard, ring terminal (125mm)
**N** - Dust cap PA lanyard (125mm)

**Drain Spout**
**0** - Without drain spout
**1** - With drain spout without tube
**2** - With drain spout with tube; 1m long
**3** - With drain spout with tube, 2m long

**Locking Device**
**A** - No locking device
**B** - Motorized switch assembly (No male connector supplied for locking device).
**C** - Motorized switch assembly including connector & 300mm cable
**D** - Motorized switch assembly including connector & 300mm cable & socket contacts on single wires
**E** - Solenoid 12VDC assembly (cable length 250mm)
**F** - Solenoid 24VDC assembly (cable length 250mm)
**G** - Solenoid 12VDC assembly (same as cable length)
**H** - Solenoid 24VDC assembly (same as cable length)

**Rubber Boot**
**0** - No rubber boot supplied

**Mounting Hole Pattern**
**A** - Standard pattern

**Flange Gasket**
**0** - No flange gasket supplied
**1** - Flange gasket

**Modification Code - if applicable (3 digits)**
**001 to 999** - For customer specific modification

## GBCE Plug

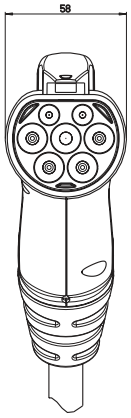


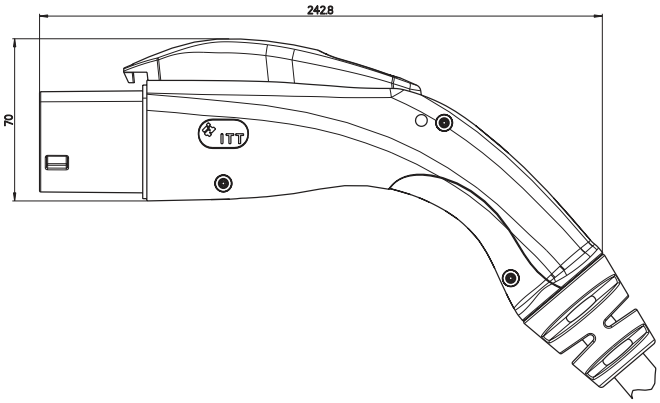


## How to order

| GBCE | 16 | 2 | 1 | -017 | S | 0 | A | -ECCV | 0 | A | -001 |
|---|---|---|---|---|---|---|---|---|---|---|---|

- Connector Series & Style
- Current Rating (cable size)
- Cable Rating
- Powering System (connector voltage rating)
- Cable Length (3 digits)
- Sealing Method
- Direction of cable strain relief
- Dust Cap
- Modification code for mode 3 combination (4 Letters)
- Direction of cable strain relief
- Dust Cap
- Modification code - if applicable (3 digits)

## Explanation

**Connector Series & Style***
**GBCE** - EVC GB/T 20234 MODE 3 connection cable EVSE coupler to vehicle coupler

**Current Rating (cable size)**
**10** - 10A (1 phase only)
**16** - 16A
**32** - 32A

**Cable Rating**
**2** - Level 2

**Power System (connector voltage rating)**
**1** - Single phase (250VAC)
**3** - Three phase (440VAC)

**Cable Length (3 digits)**
**XXX** - Length in 0.1m*XXX (017 = 1.7m)

**Sealing Method**
**S** - Sealed

* Default handle color is white

**Direction of Cable Strain Relief**
**0** - Straight cable strain relief

**Dust Cap**
**A** - No dust cap supplied
**B** - Dust cap rubber lanyard
**C** - Dust cap stainless steel lanyard (155mm)
**D** - Dust cap stainless steel lanyard (125mm)
**E** - Dust cap PA lanyard (155mm)
**F** - Dust cap PA lanyard (125mm)

**Modification Code for Mode 3 Combination (4 letters)**
**ECCV** - Connection cable IEC type 2 connector on 2-end
**GBCV** - Connection cable GBCV connector on 2-end
**EJCV** - Connection cable IEC type 1 connector on 2-end
**J2CE** - Connection cable SAE-J1772 connector 2-end

**Direction of Cable Strain Relief**
**0** - Straight cable strain relief

**Dust Cap**
**A** - No dust cap supplied
**B** - Dust cap rubber lanyard
**C** - Dust cap stainless steel lanyard (155mm)
**D** - Dust cap stainless steel lanyard (125mm)
**E** - Dust cap PA lanyard (155mm)
**F** - Dust cap PA lanyard (125mm)

**Modification Code - if applicable (3 digits)**
**001 to 999** - For customer specific modification
**179** - Handles in black color
**261** - Handles in black color, with matt finish

Dimensions shown in mm
Specifications and dimensions subject to change

## GBCV Connector

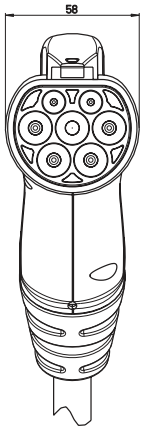


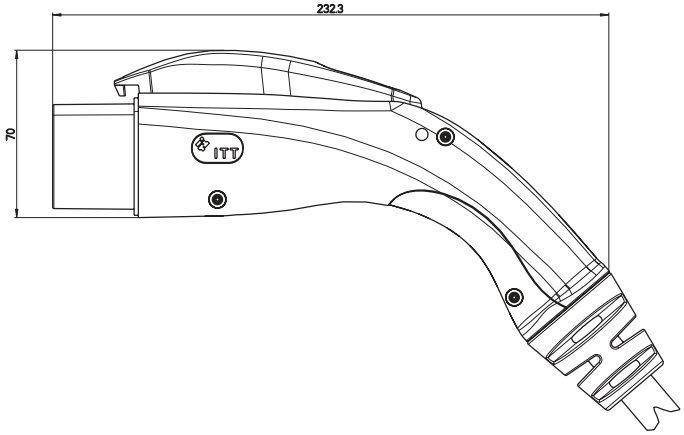


## How to order

| GBCV | 16 | 2 | 1 | -017 | S | 0 | A | -001 |
|---|---|---|---|---|---|---|---|---|

- Connector Series & Style
- Current Rating (cable size)
- Cable Rating
- Powering System (connector voltage rating)
- Cable Length (3 digits)
- Sealing Method
- Direction of cable strain relief
- Dust Cap
- Modification Code - if applicable (3 digits)

## Explanation

**Connector Series & Style***
**GBCV** - EVC GB/T 20234 Connector vehicle coupler

**Current Rating (cable size)**
**10** - 10A (1 phase only)
**16** - 16A
**32** - 32A

**Cable Rating**
**2** - Level 2

**Powering System (connector voltage rating)**
**1** - Single phase (250VAC)
**3** - Three phase (440VAC)

**Cable Length (3 digits)**
**XXX** - Length in 0.1m*XXX (017 = 1.7m)

**Sealing Method**
**S** - Sealed

**Direction of Cable Strain Relief**
**0** - Straight cable strain relief

**Dust Cap**
**A** - No dust cap supplied
**B** - Dust cap rubber lanyard
**C** - Dust cap stainless steel lanyard (155mm)
**D** - Dust cap stainless steel lanyard (125mm)
**E** - Dust cap PA lanyard (155mm)
**F** - Dust cap PA lanyard (125mm)

**Modification Code - if applicable (3 digits)**
**001 to 999** - For customer specific modification
**179** - Handles in black color
**261** - Handles in black color, with matt finish

* Default handle color is white

## GBIV Inlet

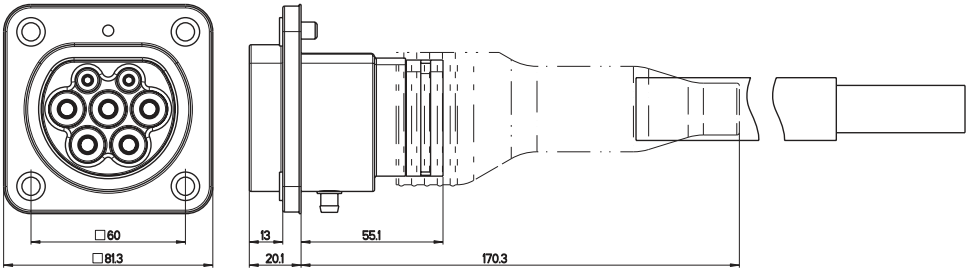


## How to order

| GBIV | 16 | 2 | 1 | -017 | S | 0 | A | 1 | A | 0 | A | 0 | -001 |
|---|---|---|---|---|---|---|---|---|---|---|---|---|---|

- Connector Series & Style
- Current Rating (Cable size)
- Cable Rating
- Powering System (Connector Voltage Rating)
- Cable Length (3 Digits)
- Sealing Method
- Compression Limiter / Metal Inserts in Flange Holes
- Dust Cap / Spring Cap
- Drain Spout
- Locking Device
- Rubber Boot
- Mounting hole pattern
- Flange Gasket
- Modification Code - if applicable (3 digits)

## Explanation

**Connector Series & Style**
**GBIV** - EVC GB/T 20234 Connector vehicle inlet

**Current Rating (cable size)**
**10** - 10A (1 phase only)
**16** - 16A
**32** - 32A

**Cable Rating**
**2** - Level 2

**Powering System (connector voltage rating)**
**1** - Single phase (250VAC)
**3** -Three phase (440VAC)

**Cable Length (3 digits)**
**XXX** - Length in 0.1m*XXX (017 = 1.7m)

**Sealing Method**
**S** - Sealed

**Compression Limiter / Metal Inserts in Flange Holes**
**0** - Without compression limiter/inserts
**1** - Compression limiter (front mounting)
**3** - Compression limiter with threaded inserts M5 (front mounting)

**Dust Cap / Spring Cap**
**A** - No dust cap supplied
**C** - Dust cap stainless steel lanyard (155mm)
**D** - Dust cap stainless steel lanyard (125mm)
**E** - Dust cap PA lanyard (155mm)
**F** - Dust cap without lanyard for OD
**M** - Dust Cap PA Lanyard, ring terminal (125mm)
**N** - Dust cap PA lanyard (125mm)

**Drain Spout**
**0** - Drain hole without hose nipple
**1** - with hose nipple
**2** - With hose nipple, with PVDV tube length 1m
**3** - With hose nipple, with PVDV tube length 2m

**Locking Device**
**A** - No locking device
**B** - Motorized switch assembly (No male connector supplied for locking device)
**C** - Motorized switch assembly including connector & 300mm cable
**D** - Motorized switch assembly including connector & 300mm cable & socket contacts on single wires

**Rubber Boot**
**0** - No rubber boot supplied

**Mounting Hole Pattern**
**A** - Standard pattern

**Flange Gasket**
**0** - No flange gasket supplied
**1** - With flange gasket

**Modification Code - if applicable (3 digits)**
**001 to 999** - For customer specific modification

Dimensions shown in mm
Specifications and dimensions subject to change

# EV wiring plans

## ECIER/ECIV/GBIE/GBIV

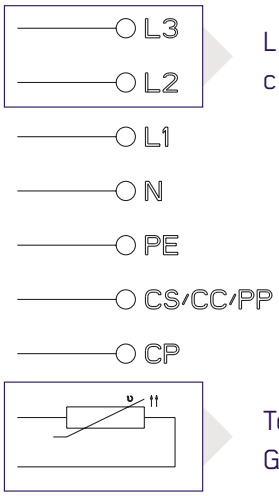


L2 and L3 for 3 phase connectors only

Temparature sensor GBIE/GBIV 32A and 63A only

## ECCE/ECCV/ACI3

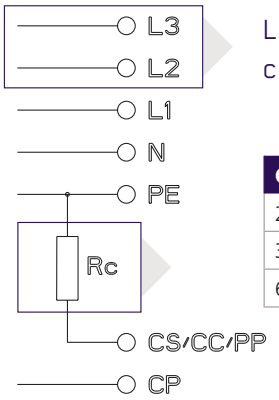


L2 and L3 for 3 phase connectors only

| Current Ratings | Rc |
|---|---|
| 20A | 680Ω/0.5W |
| 32A | 220Ω/ 1W |
| 63A | 100Ω/ 1W |

## J2IV/EJIV

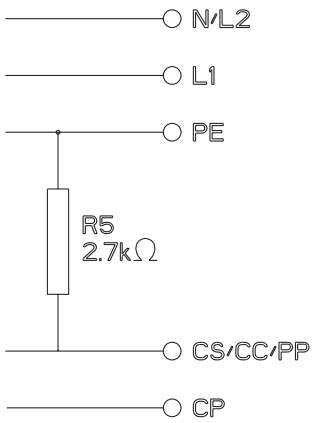


## GBCE

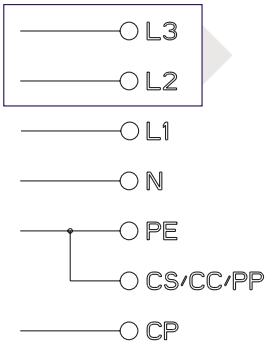


L2 and L3 for 3 phase connectors only

## GBCV/J2CE/EJCV/ACS3

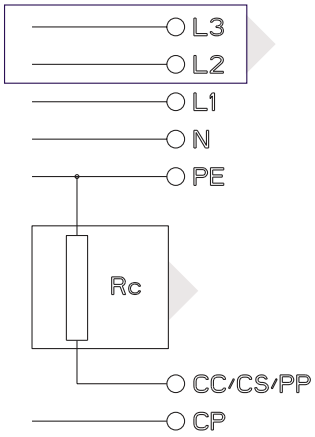


L2 and L3 for 3 phase connectors GBCV only

| Current Ratings GBCV | R4 | Rc |
|---|---|---|
| 10A | 1.8kΩ/0.5W | 1.5KΩ/0.5W |
| 16A | 2.7kΩ/0.5W | 680Ω/0.5W |
| 32A | 3.3kΩ/0.5W | 220Ω/0.5W |
| 63A | 3.3kΩ/0.5W | 100Ω/0.5W |

| Current Ratings J2CE/EJCV | R4 (R7) | Rc (R6) |
|---|---|---|
| All ratings | 330Ω/1W | 150Ω/3W |

# Gen 2+ EV Plugs and Connectors

**For new designs and applications, please order our generation 3. Product and part number information is for reference only.**

## ECCE Plug

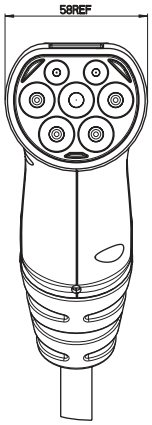


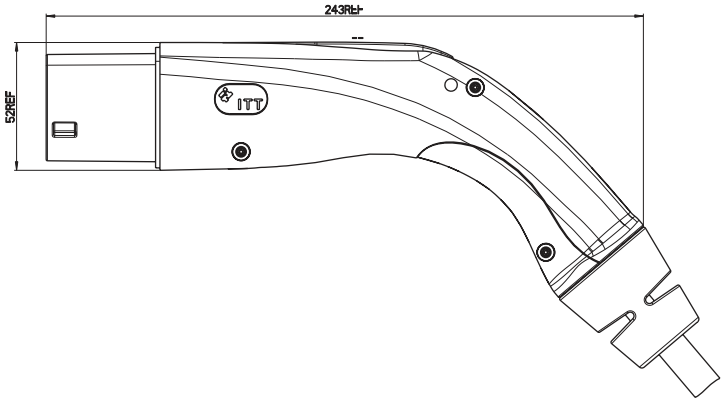


## Part Number Information

| 1 | 2 | 3 | 4 | 5 | 6 | 7 | 8 | 9 | 10 | 11 | 12 |
|---|---|---|---|---|---|---|---|---|---|---|---|
| ECCE | 20 | 2 | 1 | -017 | S | 0 | A | -ECCV | 0 | A | -001 |

## ECCV Connector

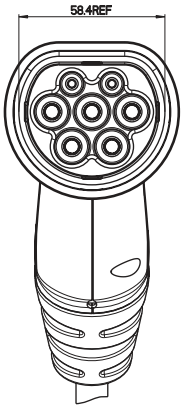


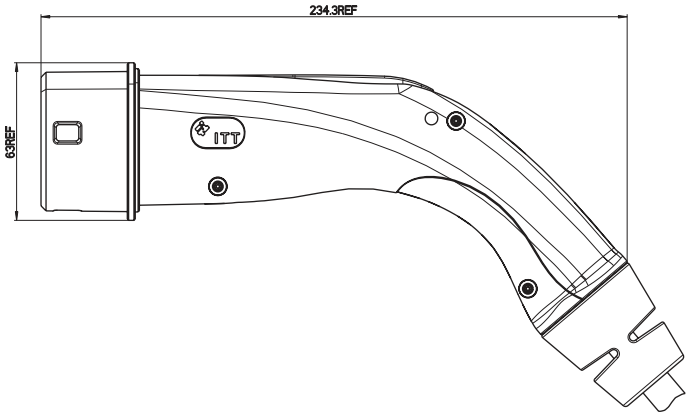


## Part Number Information

| 1 | 2 | 3 | 4 | 5 | 6 | 7 | 9 | 12 |
|---|---|---|---|---|---|---|---|---|
| ECCV | 20 | 2 | 1 | -017 | S | 0 | A | -001 |

## Part Number Legend ECCE and ECCV

| 1- Series | |
|---|---|
| ECCE | EVC IEC 62196 type 2 mode 3 connection cable |
| ECCV | EVC IEC 62196 type 2 connector vehicle coupler |
| **2- Current Rating- Amperage** | |
| XXA | 20A, 32A, 63A |
| **3- Cable Rating** | |
| 2 | Level 2 |
| **4- Power System** | |
| 1 | Single phase (250VAC) |
| 3 | Three phase (480VAC) |
| **5- Cable Length** | |
| XXX | Length in 0.1m*XXX (017=1.7M) |
| **6- Sealing Method** | |
| S | Sealed |

| 7- Direction of Strain Relief ECCE | |
|---|---|
| **0** | Straight |
| **1** | 90° downwards (excludes 63A) |
| **8- Dust Cap (DC)** | |
| **A** | No DC |
| **B** | DC rubber lanyard 187mm |
| **C** | DC stainless steel lanyard 155mm |
| **D** | DC stainless steel lanyard 125mm |
| **E** | DC PA lanyard 155mm |
| **F** | DC PA lanyard 125mm |
| **9 - MOD Code (4 letters)** | |
| **ECCV** | IEC type 2 connector on 2-end |
| **GBCV** | GBCV connector on 2-end |
| **EJCV** | IEC type 1 connector on 2-end (same connector as J2CE) only 1 phase existing |

| 10- Direction of Strain Relief second | |
|---|---|
| 0 | Straight |
| 1 | 90° downwards (excludes 63A) |
| **11- Dust Cap (DC)** | |
| A | No DC |
| B | DC rubber lanyard 187mm |
| C | DC stainless steel lanyard 155mm |
| D | DC stainless steel lanyard 125mm |
| E | DC PA lanyard 155mm |
| F | DC PA lanyard 125mm |
| **12- Mod Code** | |
| XXX | 001 - 999 : customer specific |
| 179 | Handle in black color |
| 261 | Handles in black color, with matt finish |

Dimensions shown in mm
Specifications and dimensions subject to change

# Gen 2+ EV Part Number Reference

**For new designs and applications, please order Gen3 Couplers. Product and part number information is for reference only.**

## EJCV Connector

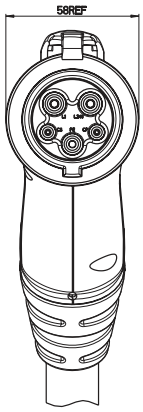


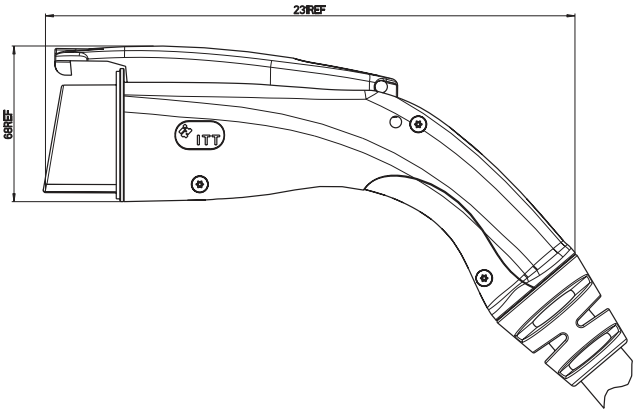


## Part Number Legend- EJCV

| 1 | 2 | 3 | 4 | 5 | 6 | 7 | 8 | 9 |
|---|---|---|---|---|---|---|---|---|
| EJCV | 20 | 2 | 1 | -017 | S | 0 | A | -001 |

| 1- Series | |
|---|---|
| **EJCV** | EVC IEC 62196 Type 1 Connector vehicle coupler |
| **2- Current Rating** | |
| XXA | 20A, 32A |
| **3- Cable Rating** | |
| 2 | Level 2 |
| **4- Power System** | |
| 1 | Single phase (250VAC) |

| 5- Cable Length | |
|---|---|
| XXX | Length in 0.1m*XXX (017=1.7M) |
| **6- Sealing Method** | |
| S | Sealed |
| **7- Direction of Strain Relief ECCE** | |
| **0** | Straight |

| 8- Dust Cap (DC) | |
|---|---|
| **A** | No DC |
| **C** | DC stainless steel lanyard 155mm |
| **D** | DC stainless steel lanyard 125mm |
| **E** | DC PA lanyard 155mm |
| **F** | DC PA lanyard 125mm |

| 9- Mod Code | |
|---|---|
| XXX | 001 - 999 : customer specific |
| 179 | Handle in black color |

## J2CE Connector

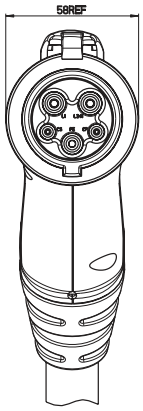


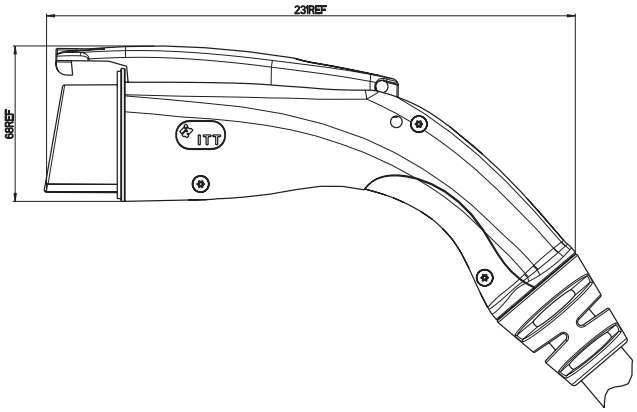


## Part Number Legend- J2CE

| 1 | 2 | 3 | 4 | -5 | 6 | 7 | 8 | -9 |
|---|---|---|---|---|---|---|---|---|
| J2CE | 16 | 1 | 1 | -17 | S | 0 | A | -001 |

| 1- Series | |
|---|---|
| **J2CE** | EVC SAE-J1772 Connector vehicle coupler |
| **2- Current Rating -Cable Size by Level** | |
| XX | 16 - 16A (Level 1)<br>20 - 20A<br>30 - 30A (Level 2)<br>32 - 32A (Level 2)<br>40 - 40A (Level 2)<br>48 - 48A (Level 2)<br>75 - 75A (Level 2 with canted coil spring)<br>80 - 80A (Level 2 with canted coil spring) |

| 3- Cable Rating | |
|---|---|
| 1 | Level 1 |
| 2 | Level 2 |
| **4- Power System** | |
| 1 | Single phase (120VAC for level 1, 240VAC for level 2) |
| **5- Cable Length** | |
| XXX | Length in 0.1m*XXX (017=1.7M) |
| **6- Power Contact Type** | |
| L | |
| **S** | |

| 7- Cable Strain Relief | |
|---|---|
| 0 | Straight |
| **8- Dust Cap (DC)** | |
| **A** | No DC |
| **C** | DC stainless steel lanyard 155mm |
| **D** | DC stainless steel lanyard 125mm |
| **E** | DC PA lanyard 155mm |
| **F** | DC PA lanyard 125mm |

| 9- Mod Code | |
|---|---|
| XXX | 001 - 999 : customer specific |
| 179 | Handle in black color |
| 273 | Cold temperature (flexible) cable (only for current ratings 30A-80A |
| 276 | Handles in black color + cold temperature (flexible) cable (only for current ratings 30A-80A) |
| 261 | Handles in black color, with matt finish |

Dimensions shown in mm
Specifications and dimensions subject to change

# Notes

**Connect with your ITT Cannon representative today or visit us at ittcannon.com**

# Connect with the experts

ITT Cannon is a world leader in the design and manufacture of highly engineered solutions for global e-mobility markets.

## Why ITT

ITT is a focused multi-industrial company that designs and manufactures highly engineered critical components and customized technology solutions. ITT's Cannon brand is a leading global manufacturer of connector products serving international customers in aerospace, defense, medical, industrial and transportation end markets. ITT's Connector business, which also includes the Veam and BIW Connector Systems brand, manufactures and supplies a variety of connectors and interconnects that make it possible to transfer data, signal and power in an increasingly connected world.

Connect with your ITT Cannon representative today or visit us at ittcannon.com

Follow us


**CHINA - Shenzhen City**
+86.755.2726.7888

**GERMANY - Weinstadt**
+49.7151.699.0

**ITALY - Lainate**
+39.02938721

**KOREA**
+82.2.702.7111

**SHANGHAI**
+ 86.21.2231.2222

**UK - Basingstoke**
+44.1256.347400

**FRANCE**
+33.1.60.04.93.93

**HONG KONG**
+852.2732.2720

**JAPAN - Kanagawa**
+81.462.57.2010

**MEXICO - Nogales**
+52.631.3110050

**SINGAPORE**
+65 66974205

**USA - Irvine, CA**
+1.800.854.3028



The "ITT Engineered Blocks" symbol, "ITT", "Cannon" and "Veam"are registered trademarks of ITT Inc.
Specification and other data are based on information available at the time of printing, and are subject to change without notice.

© 2024 ITT Inc.



ITT Cannon AC EV CAT 03/2024