cannon

Interconnect Solutions for e-mobility

IEC, SAE and GB/T

ITT

We Connect

The future of e-mobility

Drawing upon 100 years of interconnect excellence and nearly a decade of innovation in the Electric Vehicle industry, ITT represents a committed partner to today's e-mobility industry, bringing connection solutions to the market that are truly Engineered for Life.

Global solutions for the EV industry

The ITT difference

- Proven application expertise
- Global capabilities & local support
- Unrivalled customization expertise
- A committed innovator & business partner

About ITT

ITT is a diversified leading manufacturer of highly engineered critical components and customized technology solutions for the energy, transportation and industrial markets. Building on its heritage of innovation, ITT partners with its customers to deliver enduring solutions to the key industries that underpin our modern way of life. Founded in 1920, ITT is headquartered in Stamford, Connecticut, with employees in more than 35 countries and sales in a total of approximately 125 countries.
For more information visit itt.com

IEC, SAE and GB/T e-mobility Interconnect Solutions

ITT's class leading UL and CE certified connectors, plugs, inlets, outlets and accessories offer recognized, trusted and proven charging solutions for today's e-mobility markets. Built in accordance with all key regional standards - IEC 62196 for Europe, SAE J1772 for the Americas and Japan and GB/T 20234 for China they provide a truly global portfolio.

ITT offers a fully comprehensive range of AC charging options– with an industry leading amperage range from 10A to 80A, single and triple phase variants, low contact resistance and a minimum of 10k mating cycles. In addition to off-the-shelf solutions our EV offering is fully customizable to meet specific requirements and we are able to offer variants on colors, harnesses and terminals.

By using common coupler connector/plug elements such as an ergonomically designed handle, robust contact system, innovative wire positioners and strain relief system ITT is able to serve global industry players with a consistent, recognizable look and feel to support their own product, user and brand experience.

Key features

- Up to 80A AC charging option
- Sealing to meet and exceed specifications
- Cable options certified and approved to regional requirements
- Low contact resistance
- Minimum 10k mating cycles
- Connector and plug strain relief provides protection from cable overstressing

An e-mobility leader

- A truly global product portfolio
- Extensive customization options
- A track record of EV innovation
- A pioneer in DC fast charging technology

Applications

- Home EV charging units
- Public charging stations
- Roadside assistance trucks
- Fleet trucks
- EV mass transit vehicles
- Electric watercraft
- Passenger vehicles
- Electric motorcycles
- Electric agriculture vehicles

Dimensions shown in mm
Specifications and dimensions subject to change

IEC Gen 3 electric vehicle charging solutions

ITT's IEC e-mobility solutions are built in accordance with IEC 62196-1 and IEC 62196-2 standards for AC single and three phase charging systems.

IEC performance data	
Temperature range	-30°C to +50°C
Durability	10,000 mating cycles minimum
Sealing requirements	IP 44 min per IEC 61851-1 and tested in accordance with IEC 60529
Certifications connector	CE, UKCA, VDE, DIN EN 62196-1 and DIN EN 62196-2
Certifications cable	EN 50620

Key features

- UV resistance with black matte handle surface
- Enhanced design eliminates screw visibility
- Textured coupler connector/plug handle – provides enhanced grip while in use.
- Compact and ergonomic for ease of use by consumers
- Optional mating face protection – lanyard dust caps options for coupler connector/plug and spring cap options for inlets provide additional protection when connectors are not in use.
- Rapid installation for charging station manufactures with enhanced cable design

ACI3 Coupler for IEC

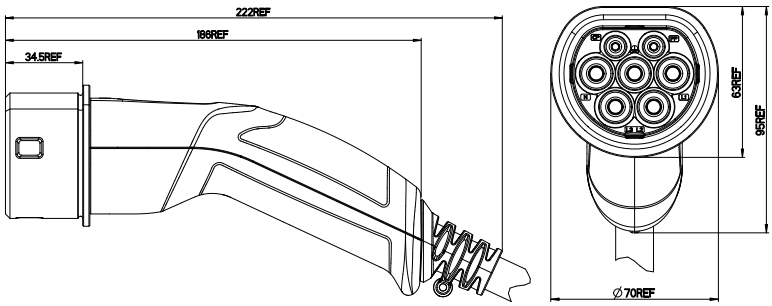

ACI3-J2 Connection Cable

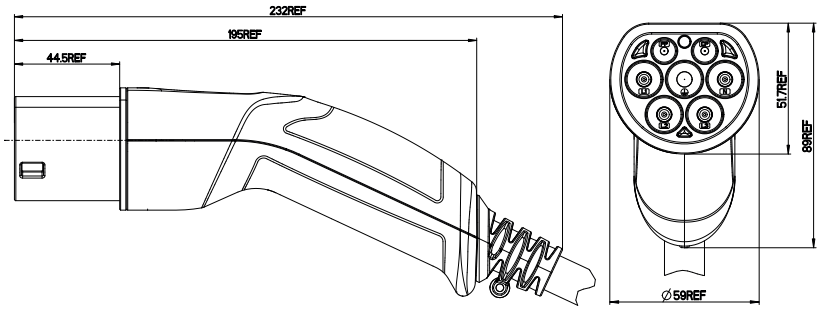

How to order

AC	I	3	-T2	032	-1	BK	-017	A	-1	A	1	-001

- Connector Series
- Regional Certification Code
- Generation
- Type
- Amperage
- Phase
- Handle Color
- Cable Length
- Cable Type
- Contact System
- Sealing
- Dust Cap
- Modification Code

Explanation

Connector Series
AC - IEC AC Connector

Regional Certification Code
I - DIN EN 62196-2 certified at VDE

Generation
3 - Generation 3

Type
J2 - Connection cable Mode 3 Case B; Type 2-Type 2
T2 - Tethered lead Mode 3 Case C; Type 2

Amperage
020 - 20 Ampere
032 - 32 Ampere
063 - 63 Ampere

Phase
1 - Single phase (250VAC)
3 - Three phase (480VAC)

Color
BK - Black

Cable Length
017 - Length option in 0.1m (example 017=1.7m)

Cable Type
A - Standard cable assembly

Contact System
1 - Pin contacts and / or slotted socket contacts

Sealing
A - According to standard (IP24/44)

Dust Cap
1 - No dust cap
2 - Rubber dust cap with PA rope

Modification Code
Contact the factory for modifications

Dimensions shown in mm
Specifications and dimensions subject to change

ECIER Outlet

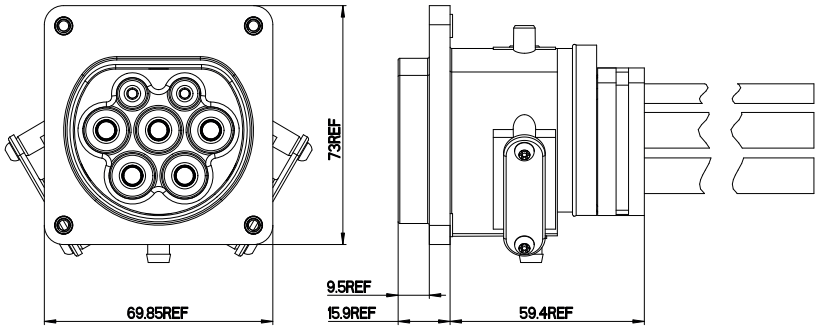

How to order

ECIER	20	2	1	-017	S	2	A	1	A	0	A	0	-001

- Connector Series & Style
- Current Rating (cable size)
- Cable Rating
- Powering System (connector voltage rating)
- Cable Length (3 digits)
- Sealing Method
- Compression Limiter / Metal Inserts in Flange Holes
- Dust cap / Spring cap
- Drain Spout
- Locking Device
- Rubber Boot
- Mounting hole pattern
- Flange Gasket
- Modification Code - if applicable (3 digits)

Explanation

Connector Series & Style
ECIER - EVC IEC 62196 Type 2 Connector EVSE Rear mount inlet

Current Rating (cable size)
020 - 20 Ampere
032 - 32 Ampere
063 - 63 Ampere

Cable Rating
2 - Level 2

Powering System (connector voltage rating)
1 - Single phase (250VAC)
3 - Three phase (480VAC)

Cable Length (3 digits)
XXX - Length in 0.1m*XXX (017 = 1.7m)

Sealing Method
S - Sealed

Compression Limiter / Metal Inserts in Flange Holes
0 - Without compression limiter/inserts
1 - Compression limiter (front mounting)
2 - Compression limiter with threaded inserts M4 (front mounting)

Dust Cap / Spring Cap
A - No dust cap supplied
C - Dust cap stainless steel lanyard (155mm)
D - Dust cap stainless steel lanyard (125mm)
E - Dust cap PA lanyard (155mm)
K - With mounting ring thin (to be used with mounting hole pattern "B" only) (metal inserts M4)
L - With mounting ring (to be used with mounting hole pattern "B" only) (metal inserts M4)
M - Dust cap PA lanyard, ring terminal (125mm)
N - Dust cap PA lanyard (125mm)

Drain Spout
0 - Drain hole without hose nipple
1 - with hose nipple
2 - With hose nipple, with PVDV tube length 1m
3 - With hose nipple, with PVDV tube length 2m

Locking Device
A - No locking device
B - Motorized switch assembly (No male connector supplied for locking).
C - Motorized switch assembly including connector & 300mm cable
D - Motorized switch assembly including connector & 300mm cable & socket contacts on single wires
E - Solenoid 12VDC assembly (cable length 250mm)
F - Solenoid 24VDC assembly (cable length 250mm)
G - Solenoid 12VDC assembly (same as cable length)
H - Solenoid 24VDC assembly (same as cable length)

Rubber Boot
0 - No rubber boot supplied

Mounting Hole Pattern
B - 58 x 61mm (width x height)
C - 52 x 52mm (width x height)

Flange Gasket
0 - No flange gasket supplied.
1 - With flange gasket

Modification Code - if applicable (3 digits)
Contact the factory for modifications

ECIV Inlet

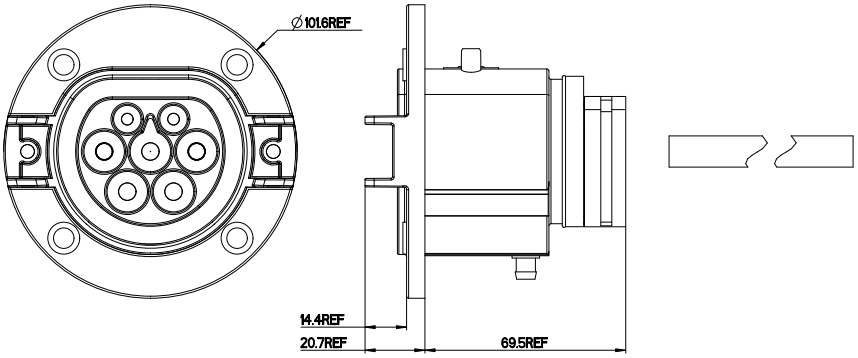

How to order

ECIV	20	2	1	-017	S	1	A	1	A	0	A	0	-001

- Connector Series & Style
- Current Rating (cable size)
- Cable Rating
- Powering System (connector voltage rating)
- Cable Length (3 digits)
- Sealing Method
- Compression Limiter / Metal Inserts in Flange Holes
- Dust Cap / Spring cap
- Drain Spout
- Locking Device
- Rubber Boot
- Mounting hole pattern
- Flange Gasket
- Modification Code - if applicable (3 digits)

Explanation

Connector Series & Style
ECIV - EVC IEC 62196 Type 2 Connector vehicle inlet

Current Rating (cable size)
020 - 20 Ampere
032 - 32 Ampere
063 - 63 Ampere

Cable Rating
2 - Level 2

Powering System (connector voltage rating)
1 - Single phase (250VAC)
3 - Three phase (480VAC)

Cable Length (3 digits)
XXX - Length in 0.1m*XXX (017 = 1.7m)

Sealing Method
S - Sealed

Compression Limiter / Metal Inserts in Flange Holes
0 - Without compression limiter/inserts
1 - Compression limiter (front mounting)
2 - Compression limiter with threaded inserts M4 (front mounting)
3 - Compression limiter with threaded inserts M5 (front mounting)

Dust Cap / Spring Cap
A - No dust cap supplied
C - Dust cap stainless steel lanyard (155mm)
D - Dust cap stainless steel lanyard (125mm)
E - Dust cap PA lanyard (155mm)
G - With spring cap (opening to left)
H - With spring cap (opening to the right)
M - Dust cap PA lanyard, ring terminal (125mm)
N - Dust cap PA lanyard (125mm)

Drain Spout
0 - Drain hole without hose nipple
1 - with hose nipple
2 - With hose nipple, with PVDV tube length 1m
3 - With hose nipple, with PVDV tube length 2m

Locking Device
A - No locking device
B - Motorized switch assembly (No male connector supplied for locking device)
C - Motorized switch assembly including connector and 300mm cable
D - Motorized switch assembly including connector and 300mm cable & socket contacts on single wires

Rubber Boot
0 - No rubber boot supplied

Mounting Hole Pattern
A - Standard pattern, 60 x 60mm

Flange Gasket
0 - No flange gasket supplied
1 - Flange gasket

Modification Code - if applicable (3 digits)
Contact the factory for modifications

Dimensions shown in mm
Specifications and dimensions subject to change

SAE J1772 Gen 3 electric vehicle charging solutions

ITT's Gen 3 SAE J1772 couplers are sealed up to IP67 and built in accordance with SAE standard for AC level 1 and Level 2 charging systems.

J1772 performance data	
Temperature range	-30°C to +50°C
Durability	10,000 mating cycles minimum
Sealing requirements	IP67, meets UL50, type 3R/3S
Certifications connector	UL File E531874, PSE-JET on request
Certifications cable	UL62, JET on request

Key features

- IP67 sealing
- Integrated, one piece latching button providing water and freeze resistance
- Cable handling system not required with flexible, split wire cable design reducing cable diameter and weight
- Optional cold flex material for low temperature regions
- Optional mating face protection – one piece rubber dust caps options for coupler connector/plug provide additional protection when connectors are not in use.

AC Connector for J1772

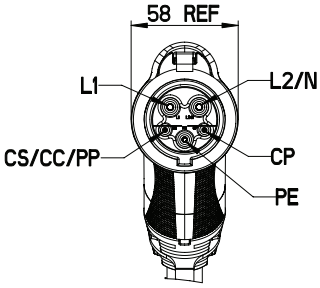

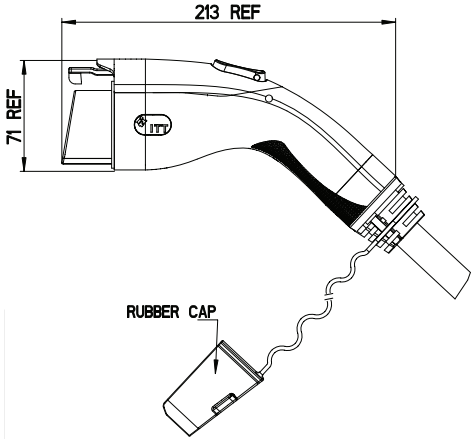

How to order

AC	S	3	T1	048	1	BK	017	C	2	C	1	

- Connector Series
- Regional Certification Code
- Generation
- Type
- Amperage
- Level
- Handle Color
- Cable Length
- Cable Type
- Contact System
- Sealing
- Dust Cap
- Modification Code

Explanation

Connector Series
AC - SAE-J1772 AC Connector vehicle coupler

Regional Certification Code
S - SAE J1772:2017 & 2251:2017 certified at UL
P - PSE / JET7558-43006-1001:2019 certified

Generation
3 - Generation 3

Type
T1 - Tethered lead mode 3 case C type 1

Amperage
032 - 32 AMP
040 - 40 AMP
048 - 48 AMP
052 - 52 AMP (cable type "C" only)
080 - 80 AMP

Level
1 - Level 1 (120V)
2 - Level 2 (240V)

Color
BK - Black
GY - Grey

Cable Length
017 - Length option in 0.1m (example 017=1.7m)

Cable Type
A - Standard cable assembly
B - Cold flex cable for low temperature regions
C - Split wire cable - 2 hot wires and 2 neutral
D - Coiled cable*

Contact System
2 - Lamella hyperboloid contacts

Sealing
C - IP67

Dust Cap
1 - No dust cap
3 - One-piece rubber dust cap

Modification Code
Contact the factory for modifications

*consult factory

Dimensions shown in mm
Specifications and dimensions subject to change

J2IV Inlet

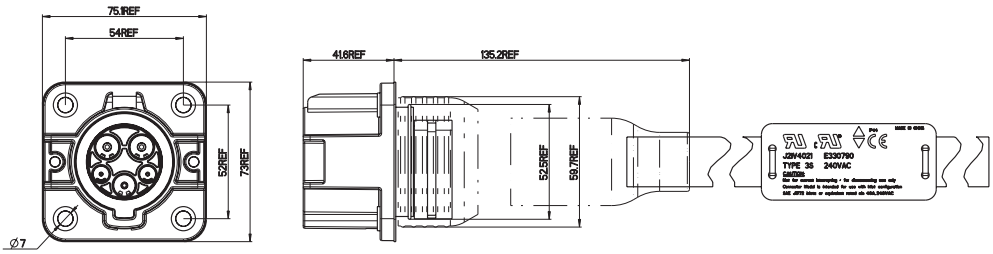

How to order

J2IV	20	2	1	-17	S	1	A	0	A	0	A	0	-001

- Connector Series & Style
- Current Rating (cable size)
- Cable Rating
- Powering System (connector voltage rating)
- Cable Length (2 digits)
- Sealing Method
- Compression Limiter / Metal Inserts in Flange Holes
- Dust Cap / Spring cap
- Drain Spout
- Locking Device
- Rubber Boot
- Mounting hole pattern
- Flange Gasket
- Modification Code - if applicable (3 digits)

Explanation

Connector Series & Style
J2IV - EVC SAE-J1772 Connector vehicle inlet

Current Rating (cable size)
20 - 20A
40 - 40A (level 2 only)
75 - 75A (level 2 only)
80 - 80A (level 2 only)

Cable Rating
1 - Level 1
2 - Level 2

Powering System (connector voltage rating)
1 - Single phase (120V AC for level 1, 240VAC for levels 2)

Cable Length (2 digits)
XX - Length in ft. (17 = 17ft)

Sealing Method
S - Sealed

Compression Limiter / Metal Inserts in Flange Holes
0 - Without compression limiter/inserts
1 - Compression limiter (front mounting)
3 - Compression limiter with threaded inserts M5 (front mounting)

Dust Cap / Spring Cap
A - No dust cap supplied
G - With spring cap (opening to left)
H - With spring cap (opening to right)

Drain Spout
0 - Without drain spout

Locking Device
A - No locking device

Rubber Boot
0 - No rubber boot supplied

Mounting Hole Pattern
A - Standard pattern

Flange Gasket
0 - No flange gasket supplied
1 - Flange gasket

Modification Code - if applicable (3 digits)
001 to 999 - For customer specific modification

GB/T electric vehicle charging solutions

ITT's GB e-mobility solutions are built in accordance with GB-T 20234 standards for charging systems.

GB performance data	
Temperature range	-30°C to +50°C
Durability	10,000 mating cycles minimum
Sealing requirements	IP54/IP55
Certifications connector	CQC 13029087619
Certifications cable	CQC 1103 or 1104

Key features

- Drain holes at the bottom of the coupler connector/plug – eliminates latch freezing and includes protective shield from small diameter metal penetration to the wiring.
- Textured coupler connector/plug handle – provides enhanced grip while in use.
- Optional mating face protection – lanyard dust caps options for coupler connector/plug and spring cap options for inlets provide additional protection when connectors are not in use.

Dimensions shown in mm
Specifications and dimensions subject to change

GBIE Outlet

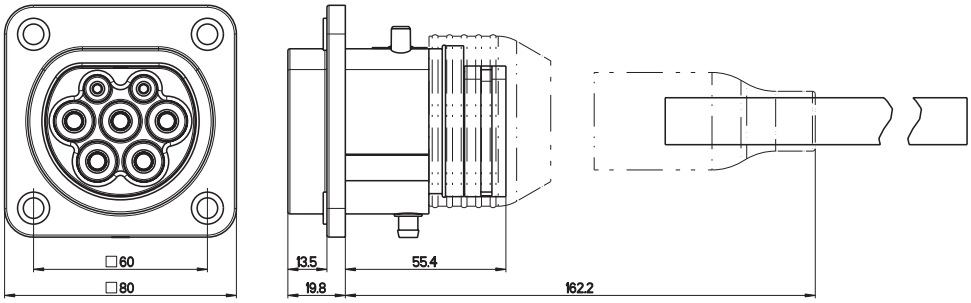

How to order

GBIE	16	2	1	-017	S	0	A	1	A	0	A	0	-001

- Connector Series & Style
- Current Rating (cable size)
- Cable Rating
- Powering System (connector voltage rating)
- Cable Length (3 digits)
- Sealing Method
- Compression Limiter / Metal Inserts in Flange Holes
- Dust Cap / Spring cap
- Drain Spout
- Locking Device
- Rubber Boot
- Mounting Hole Pattern
- Flange Gasket
- Modification Code - If applicable (3 digits)

Explanation

Connector Series & Style
GBIE - EVC GB/T 20234 Connector EVSE inlet

Current Rating (cable size)
10 - 10A (1 phase only)
16 - 16A
32 - 32A

Cable Rating
2 - Level 2

Powering System (connector voltage rating)
1 - Single phase (250VAC)
3 - Three phase (440VAC)

Cable Length (3 digits)
XXX - Length in 0.1m*XXX (017 = 1.7m)

Sealing Method
S - Sealed

Compression Limiter / Metal Inserts in Flange Holes
0 - Without compression limiter/inserts
1 - Compression limiter (front mounting)
3 - Compression limiter with threaded inserts M5 (front mounting)

Dust Cap / Spring Cap
A - No dust cap supplied
C - Dust cap stainless steel lanyard (155mm)
D - Dust cap stainless steel lanyard (125mm)
E - Dust cap PA lanyard (155mm)
F - Dust cap without lanyard, Sealing on OD
M - Dust Cap PA Lanyard, ring terminal (125mm)
N - Dust cap PA lanyard (125mm)

Drain Spout
0 - Without drain spout
1 - With drain spout without tube
2 - With drain spout with tube; 1m long
3 - With drain spout with tube, 2m long

Locking Device
A - No locking device
B - Motorized switch assembly (No male connector supplied for locking device).
C - Motorized switch assembly including connector & 300mm cable
D - Motorized switch assembly including connector & 300mm cable & socket contacts on single wires
E - Solenoid 12VDC assembly (cable length 250mm)
F - Solenoid 24VDC assembly (cable length 250mm)
G - Solenoid 12VDC assembly (same as cable length)
H - Solenoid 24VDC assembly (same as cable length)

Rubber Boot
0 - No rubber boot supplied

Mounting Hole Pattern
A - Standard pattern

Flange Gasket
0 - No flange gasket supplied
1 - Flange gasket

Modification Code - if applicable (3 digits)
001 to 999 - For customer specific modification

Dimensions shown in mm
Specifications and dimensions subject to change

GBCE Plug

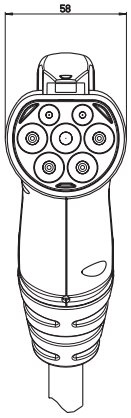

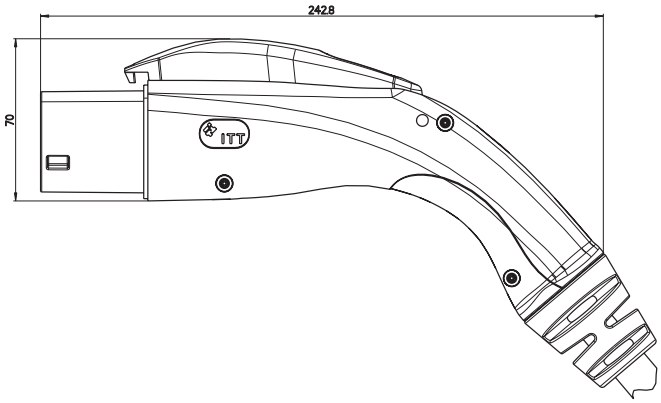

How to order

GBCE	16	2	1	-017	S	0	A	-ECCV	0	A	-001

- Connector Series & Style
- Current Rating (cable size)
- Cable Rating
- Powering System (connector voltage rating)
- Cable Length (3 digits)
- Sealing Method
- Direction of cable strain relief
- Dust Cap
- Modification code for mode 3 combination (4 Letters)
- Direction of cable strain relief
- Dust Cap
- Modification code - if applicable (3 digits)

Explanation

Connector Series & Style*
GBCE - EVC GB/T 20234 MODE 3 connection cable EVSE coupler to vehicle coupler

Current Rating (cable size)
10 - 10A (1 phase only)
16 - 16A
32 - 32A

Cable Rating
2 - Level 2

Power System (connector voltage rating)
1 - Single phase (250VAC)
3 - Three phase (440VAC)

Cable Length (3 digits)
XXX - Length in 0.1m*XXX (017 = 1.7m)

Sealing Method
S - Sealed

* Default handle color is white

Direction of Cable Strain Relief
0 - Straight cable strain relief

Dust Cap
A - No dust cap supplied
B - Dust cap rubber lanyard
C - Dust cap stainless steel lanyard (155mm)
D - Dust cap stainless steel lanyard (125mm)
E - Dust cap PA lanyard (155mm)
F - Dust cap PA lanyard (125mm)

Modification Code for Mode 3 Combination (4 letters)
ECCV - Connection cable IEC type 2 connector on 2-end
GBCV - Connection cable GBCV connector on 2-end
EJCV - Connection cable IEC type 1 connector on 2-end
J2CE - Connection cable SAE-J1772 connector 2-end

Direction of Cable Strain Relief
0 - Straight cable strain relief

Dust Cap
A - No dust cap supplied
B - Dust cap rubber lanyard
C - Dust cap stainless steel lanyard (155mm)
D - Dust cap stainless steel lanyard (125mm)
E - Dust cap PA lanyard (155mm)
F - Dust cap PA lanyard (125mm)

Modification Code - if applicable (3 digits)
001 to 999 - For customer specific modification
179 - Handles in black color
261 - Handles in black color, with matt finish

Dimensions shown in mm
Specifications and dimensions subject to change

GBCV Connector

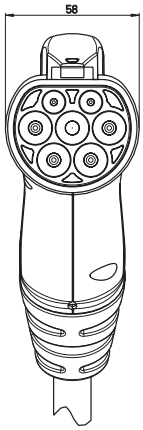

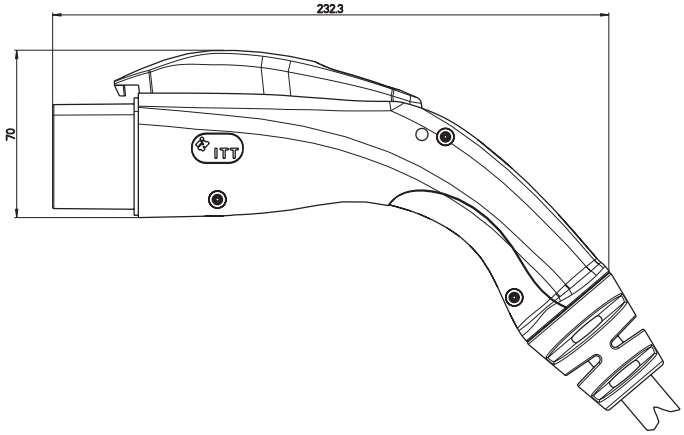

How to order

GBCV	16	2	1	-017	S	0	A	-001

- Connector Series & Style
- Current Rating (cable size)
- Cable Rating
- Powering System (connector voltage rating)
- Cable Length (3 digits)
- Sealing Method
- Direction of cable strain relief
- Dust Cap
- Modification Code - if applicable (3 digits)

Explanation

Connector Series & Style*
GBCV - EVC GB/T 20234 Connector vehicle coupler

Current Rating (cable size)
10 - 10A (1 phase only)
16 - 16A
32 - 32A

Cable Rating
2 - Level 2

Powering System (connector voltage rating)
1 - Single phase (250VAC)
3 - Three phase (440VAC)

Cable Length (3 digits)
XXX - Length in 0.1m*XXX (017 = 1.7m)

Sealing Method
S - Sealed

Direction of Cable Strain Relief
0 - Straight cable strain relief

Dust Cap
A - No dust cap supplied
B - Dust cap rubber lanyard
C - Dust cap stainless steel lanyard (155mm)
D - Dust cap stainless steel lanyard (125mm)
E - Dust cap PA lanyard (155mm)
F - Dust cap PA lanyard (125mm)

Modification Code - if applicable (3 digits)
001 to 999 - For customer specific modification
179 - Handles in black color
261 - Handles in black color, with matt finish

* Default handle color is white

GBIV Inlet

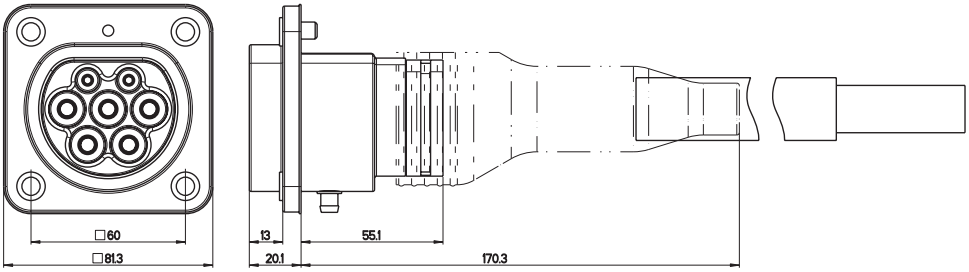

How to order

GBIV	16	2	1	-017	S	0	A	1	A	0	A	0	-001

- Connector Series & Style
- Current Rating (Cable size)
- Cable Rating
- Powering System (Connector Voltage Rating)
- Cable Length (3 Digits)
- Sealing Method
- Compression Limiter / Metal Inserts in Flange Holes
- Dust Cap / Spring Cap
- Drain Spout
- Locking Device
- Rubber Boot
- Mounting hole pattern
- Flange Gasket
- Modification Code - if applicable (3 digits)

Explanation

Connector Series & Style
GBIV - EVC GB/T 20234 Connector vehicle inlet

Current Rating (cable size)
10 - 10A (1 phase only)
16 - 16A
32 - 32A

Cable Rating
2 - Level 2

Powering System (connector voltage rating)
1 - Single phase (250VAC)
3 -Three phase (440VAC)

Cable Length (3 digits)
XXX - Length in 0.1m*XXX (017 = 1.7m)

Sealing Method
S - Sealed

Compression Limiter / Metal Inserts in Flange Holes
0 - Without compression limiter/inserts
1 - Compression limiter (front mounting)
3 - Compression limiter with threaded inserts M5 (front mounting)

Dust Cap / Spring Cap
A - No dust cap supplied
C - Dust cap stainless steel lanyard (155mm)
D - Dust cap stainless steel lanyard (125mm)
E - Dust cap PA lanyard (155mm)
F - Dust cap without lanyard for OD
M - Dust Cap PA Lanyard, ring terminal (125mm)
N - Dust cap PA lanyard (125mm)

Drain Spout
0 - Drain hole without hose nipple
1 - with hose nipple
2 - With hose nipple, with PVDV tube length 1m
3 - With hose nipple, with PVDV tube length 2m

Locking Device
A - No locking device
B - Motorized switch assembly (No male connector supplied for locking device)
C - Motorized switch assembly including connector & 300mm cable
D - Motorized switch assembly including connector & 300mm cable & socket contacts on single wires

Rubber Boot
0 - No rubber boot supplied

Mounting Hole Pattern
A - Standard pattern

Flange Gasket
0 - No flange gasket supplied
1 - With flange gasket

Modification Code - if applicable (3 digits)
001 to 999 - For customer specific modification

Dimensions shown in mm
Specifications and dimensions subject to change

EV wiring plans

ECIER/ECIV/GBIE/GBIV

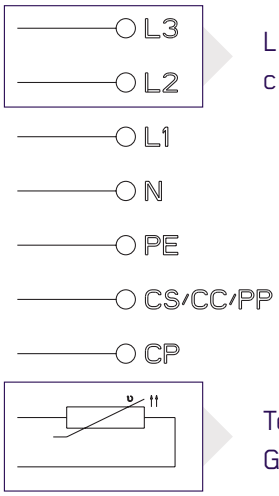

L2 and L3 for 3 phase connectors only

Temparature sensor GBIE/GBIV 32A and 63A only

ECCE/ECCV/ACI3

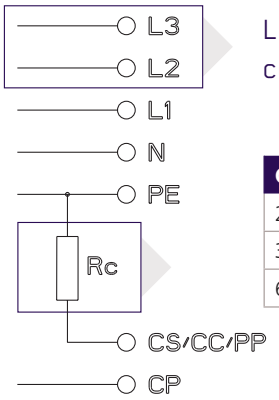

L2 and L3 for 3 phase connectors only

Current Ratings	Rc
20A	680Ω/0.5W
32A	220Ω/ 1W
63A	100Ω/ 1W

J2IV/EJIV

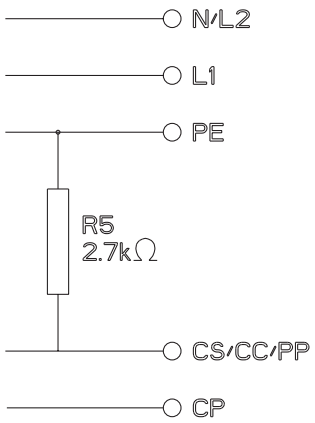

GBCE

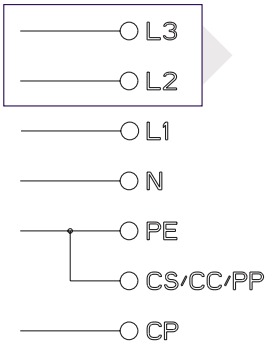

L2 and L3 for 3 phase connectors only

GBCV/J2CE/EJCV/ACS3

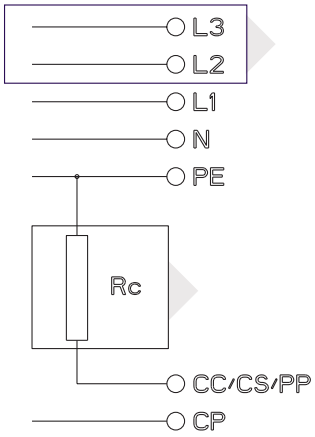

L2 and L3 for 3 phase connectors GBCV only

Current Ratings GBCV	R4	Rc
10A	1.8kΩ/0.5W	1.5KΩ/0.5W
16A	2.7kΩ/0.5W	680Ω/0.5W
32A	3.3kΩ/0.5W	220Ω/0.5W
63A	3.3kΩ/0.5W	100Ω/0.5W

Current Ratings J2CE/EJCV	R4 (R7)	Rc (R6)
All ratings	330Ω/1W	150Ω/3W

Gen 2+ EV Plugs and Connectors

For new designs and applications, please order our generation 3. Product and part number information is for reference only.

ECCE Plug

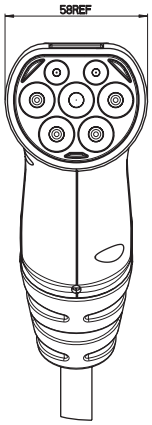

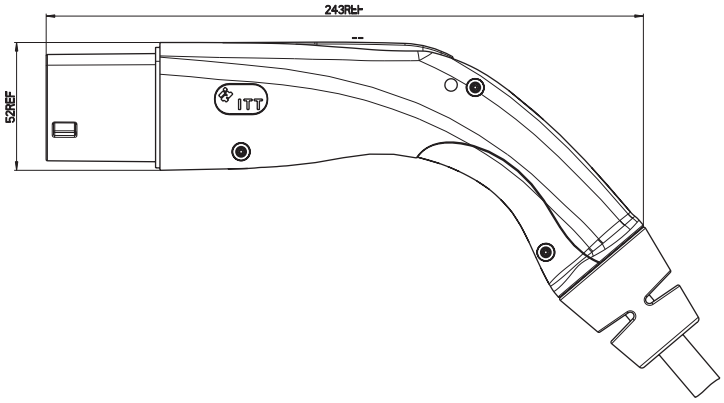

Part Number Information

1	2	3	4	5	6	7	8	9	10	11	12
ECCE	20	2	1	-017	S	0	A	-ECCV	0	A	-001

ECCV Connector

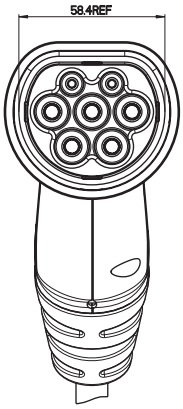

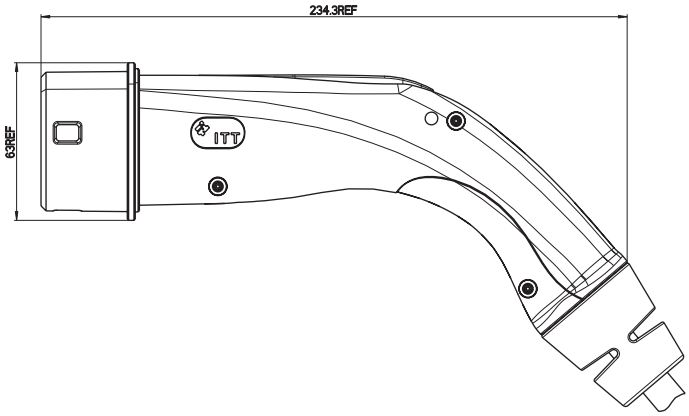

Part Number Information

1	2	3	4	5	6	7	9	12
ECCV	20	2	1	-017	S	0	A	-001

Part Number Legend ECCE and ECCV

1- Series	
ECCE	EVC IEC 62196 type 2 mode 3 connection cable
ECCV	EVC IEC 62196 type 2 connector vehicle coupler
2- Current Rating- Amperage	
XXA	20A, 32A, 63A
3- Cable Rating	
2	Level 2
4- Power System	
1	Single phase (250VAC)
3	Three phase (480VAC)
5- Cable Length	
XXX	Length in 0.1m*XXX (017=1.7M)
6- Sealing Method	
S	Sealed

7- Direction of Strain Relief ECCE	
0	Straight
1	90° downwards (excludes 63A)
8- Dust Cap (DC)	
A	No DC
B	DC rubber lanyard 187mm
C	DC stainless steel lanyard 155mm
D	DC stainless steel lanyard 125mm
E	DC PA lanyard 155mm
F	DC PA lanyard 125mm
9 - MOD Code (4 letters)	
ECCV	IEC type 2 connector on 2-end
GBCV	GBCV connector on 2-end
EJCV	IEC type 1 connector on 2-end (same connector as J2CE) only 1 phase existing

10- Direction of Strain Relief second	
0	Straight
1	90° downwards (excludes 63A)
11- Dust Cap (DC)	
A	No DC
B	DC rubber lanyard 187mm
C	DC stainless steel lanyard 155mm
D	DC stainless steel lanyard 125mm
E	DC PA lanyard 155mm
F	DC PA lanyard 125mm
12- Mod Code	
XXX	001 - 999 : customer specific
179	Handle in black color
261	Handles in black color, with matt finish

Dimensions shown in mm
Specifications and dimensions subject to change

Gen 2+ EV Part Number Reference

For new designs and applications, please order Gen3 Couplers. Product and part number information is for reference only.

EJCV Connector

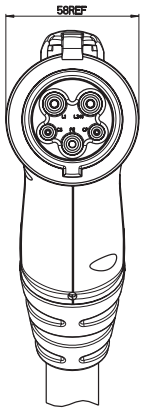

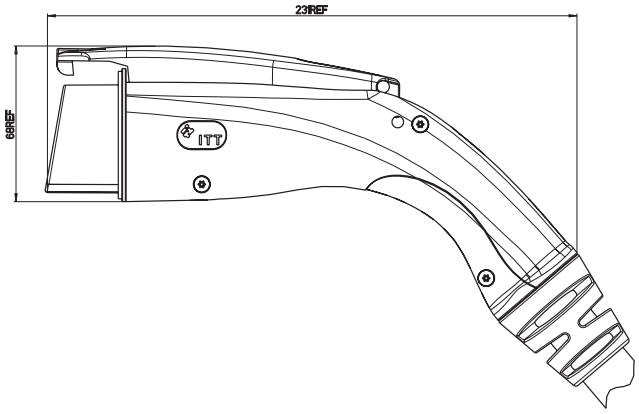

Part Number Legend- EJCV

1	2	3	4	5	6	7	8	9
EJCV	20	2	1	-017	S	0	A	-001

1- Series	
EJCV	EVC IEC 62196 Type 1 Connector vehicle coupler
2- Current Rating	
XXA	20A, 32A
3- Cable Rating	
2	Level 2
4- Power System	
1	Single phase (250VAC)

5- Cable Length	
XXX	Length in 0.1m*XXX (017=1.7M)
6- Sealing Method	
S	Sealed
7- Direction of Strain Relief ECCE	
0	Straight

8- Dust Cap (DC)	
A	No DC
C	DC stainless steel lanyard 155mm
D	DC stainless steel lanyard 125mm
E	DC PA lanyard 155mm
F	DC PA lanyard 125mm

9- Mod Code	
XXX	001 - 999 : customer specific
179	Handle in black color

J2CE Connector

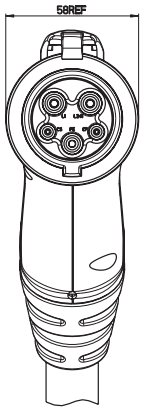

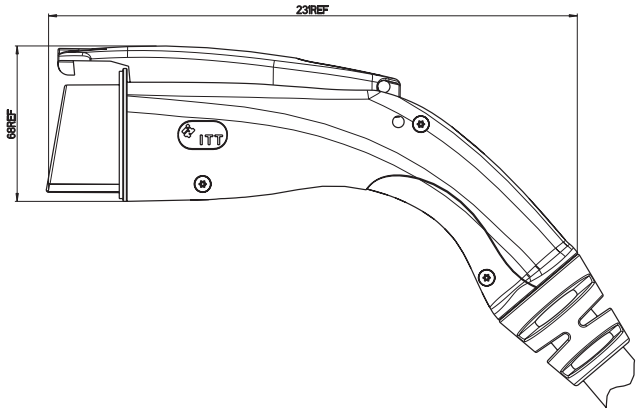

Part Number Legend- J2CE

1	2	3	4	-5	6	7	8	-9
J2CE	16	1	1	-17	S	0	A	-001

1- Series	
J2CE	EVC SAE-J1772 Connector vehicle coupler
2- Current Rating -Cable Size by Level	
XX	16 - 16A (Level 1) 20 - 20A 30 - 30A (Level 2) 32 - 32A (Level 2) 40 - 40A (Level 2) 48 - 48A (Level 2) 75 - 75A (Level 2 with canted coil spring) 80 - 80A (Level 2 with canted coil spring)

3- Cable Rating	
1	Level 1
2	Level 2
4- Power System	
1	Single phase (120VAC for level 1, 240VAC for level 2)
5- Cable Length	
XXX	Length in 0.1m*XXX (017=1.7M)
6- Power Contact Type	
L	
S	

7- Cable Strain Relief	
0	Straight
8- Dust Cap (DC)	
A	No DC
C	DC stainless steel lanyard 155mm
D	DC stainless steel lanyard 125mm
E	DC PA lanyard 155mm
F	DC PA lanyard 125mm

9- Mod Code	
XXX	001 - 999 : customer specific
179	Handle in black color
273	Cold temperature (flexible) cable (only for current ratings 30A-80A
276	Handles in black color + cold temperature (flexible) cable (only for current ratings 30A-80A)
261	Handles in black color, with matt finish

Dimensions shown in mm
Specifications and dimensions subject to change

Notes

Connect with your ITT Cannon representative today or visit us at ittcannon.com

Connect with the experts

ITT Cannon is a world leader in the design and manufacture of highly engineered solutions for global e-mobility markets.

Why ITT

ITT is a focused multi-industrial company that designs and manufactures highly engineered critical components and customized technology solutions. ITT's Cannon brand is a leading global manufacturer of connector products serving international customers in aerospace, defense, medical, industrial and transportation end markets. ITT's Connector business, which also includes the Veam and BIW Connector Systems brand, manufactures and supplies a variety of connectors and interconnects that make it possible to transfer data, signal and power in an increasingly connected world.

Connect with your ITT Cannon representative today or visit us at ittcannon.com

Follow us

CHINA - Shenzhen City
+86.755.2726.7888

GERMANY - Weinstadt
+49.7151.699.0

ITALY - Lainate
+39.02938721

KOREA
+82.2.702.7111

SHANGHAI
+ 86.21.2231.2222

UK - Basingstoke
+44.1256.347400

FRANCE
+33.1.60.04.93.93

HONG KONG
+852.2732.2720

JAPAN - Kanagawa
+81.462.57.2010

MEXICO - Nogales
+52.631.3110050

SINGAPORE
+65 66974205

USA - Irvine, CA
+1.800.854.3028

The "ITT Engineered Blocks" symbol, "ITT", "Cannon" and "Veam"are registered trademarks of ITT Inc.
Specification and other data are based on information available at the time of printing, and are subject to change without notice.

© 2024 ITT Inc.

ITT Cannon AC EV CAT 03/2024