RAFIX 16 F - Selector switch, collar metallized, round

1.30.096.071/0000



General information	
Form of lens	flat lens
Color of lens	opaque black
Form of collar	round

Dimensions	
Collar dimensions	ø 28 mm
Overall height	24.10 mm
Mounting depth with contact block	50 mm
Key grid	30 x 30 mm
Mounting hole	ø 22.3 mm

Mechanical design	
Mounting	ring nut
Contact function	latching
Illumination	no
Lock	Micromec
Wafers	5
Lock type	001
Number of locking positions	500
Main key	on request
Rotating angle	1 x 90°, form L
Key removal position	0+1

Mechanical characteristics	
Torque max.	1.3 Nm

Electrical characteristics	
Protection class	II

Other specifications	
Operating life (operations)	65.000 cycle
Degree of protection from front side	IP65 (DIN EN 60529)
Operation temperature min.	-25 °C
Ambient temp. operating max. without lamp / LED	+70 °C
Ambient temp. operating max. with lamp /LED	- °C
Storage temperature min.	-40 °C
Storage temperature max.	+85 °C
Environmental restistance	acc. to IEC 60068-2-14, -30, -33 and -78
Ambient temp. operating max.	+70 °C

Technical data are approximate and intended solely for general orientation in the selection of a product.
Subject to modifications and errors. Images and other graphics may only be similar.
For more information, refer to www.rafi.de chapter Imprint / Data Protection.

ESD-strength lock / contact	15 kV
ESD-strength key/ front panel	4 kV
ROHS compliant	yes
REACH compliant	yes

Panel cut-out to IEC 60947-5-1

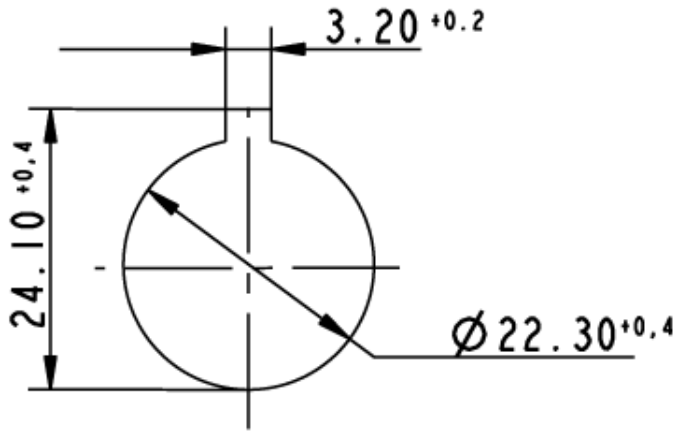

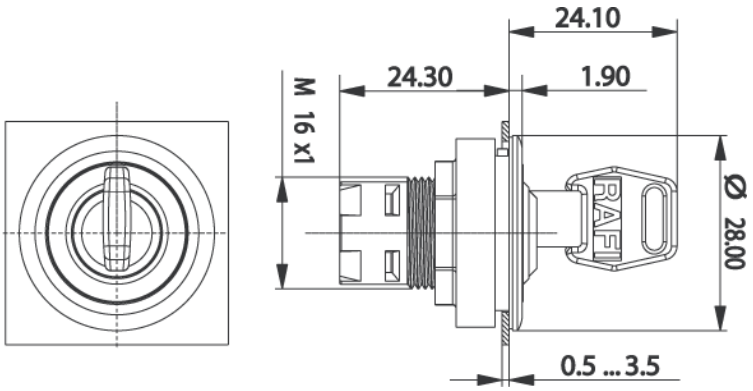

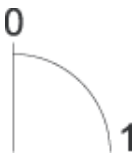

Technical data are approximate and intended solely for general orientation in the selection of a product.
Subject to modifications and errors. Images and other graphics may only be similar.
For more information, refer to www.rafi.de chapter Imprint / Data Protection.