MSM illuminated

Metal Switch, Switching Voltage up to 250 VAC

Ring illumination
blue

Area illumination
blue

Point Illumination
red

See below:
Approvals and Compliances

Description

- Mechanical switch with stroke in different versions LA (Latching) and MO (Momentary)
- Single-/ or multicolor illumination
- With torsion protection for easier handling
- Equipped with flat plug in terminals to permit fast connection
- MSM MO: Protection class IP67 frontside

Unique Selling Proposition

- Attractive tactile feedback
- High quality materials
- Long life span
- Color marking

Characteristics

- Housing material in high-quality stainless steel or aluminium
- Variety of design options regarding size, colour, illumination, connection or lettering
- Switching voltage from 30 VDC to 250 VAC
  Switching current from 0.1 A to 16 A
- Actuator: aluminium/ stainless steel/ ceramics
- For use in harsh environments

References

Further versions on request (MOQ 500 St.)

Weblinks

pdf data sheet, html datasheet, General Product Information, CAD-Drawings, Product News, Detailed request for product

Technical Data

Electrical Data	
Supply Voltage LED	see table of variants
Micro Switch	see table of variants
Impulse Withstand Voltage (ESD)	2 kV
Mechanical Data	
Actuating Force	4.5 N / 10 N
Actuating Travel	1.0 mm / 5.2 mm
Lifetime	1.5 million actuations
Shock Protection	IK07 to IK10
Mounting screw torque Plastic Nut	max. 3.5 Nm

Climatical Data	
Operating Temperature	-25 to 85 °C
Storage Temperature	-25 to 85 °C
Salt Spray Test (acc. to DIN 50021-SS)	24 h / 48 h / 96 h Residence Time
Material	
Housing	Aluminium / Stainless Steel
Actuator	Aluminium / Stainless Steel / Ceramics
Seal Ring	NBR70
Plastic Nut	PA, UL94

Approvals and Compliances

Detailed information on product approvals, code requirements, usage instructions and detailed test conditions can be looked up in Details about Approvals

SCHURTER products are designed for use in industrial environments. They have approvals from independent testing bodies according to national and international standards. Products with specific characteristics and requirements such as required in the automotive sector according to IATF 16949, medical technology according to ISO 13485 or in the aerospace industry can be offered exclusively with customer-specific, individual agreements by SCHURTER.

Compliances

The product complies with following Guide Lines

Identification	Details	Initiator	Description
CE	CE declaration of conformity	SCHURTER AG	The CE marking declares that the product complies with the applicable requirements laid down in the harmonisation of Community legislation on its affixing in accordance with EU Regulation 765/2008.
UK CA	UKCA declaration of conformity	SCHURTER AG	The UKCA marking declares that the product complies with the applicable requirements laid down in the British Amendment of Regulation (EC) 765/2008.
RoHS	RoHS	SCHURTER AG	Directive RoHS 2011/65/EU, Amendment (EU) 2015/863
REACH	REACH	SCHURTER AG	On 1 June 2007, Regulation (EC) No 1907/2006 on the Registration, Evaluation, Authorization and Restriction of Chemicals 1 (abbreviated as "REACH") entered into force.

Dimension [mm]

MSM 19 LA PI double-pole

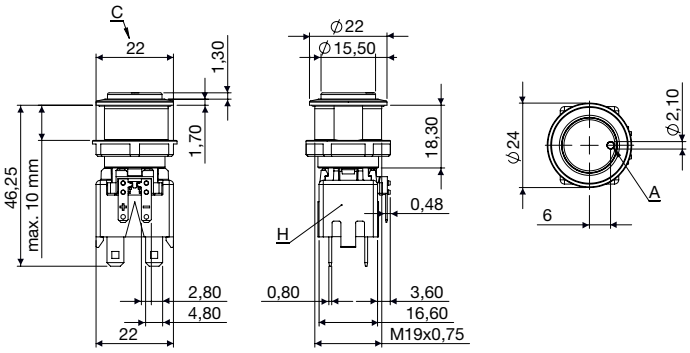

MSM 19 LA RI double-pole

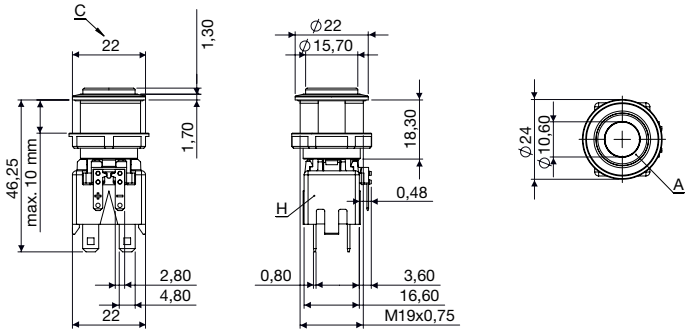

MSM 19 LA AI double-pole

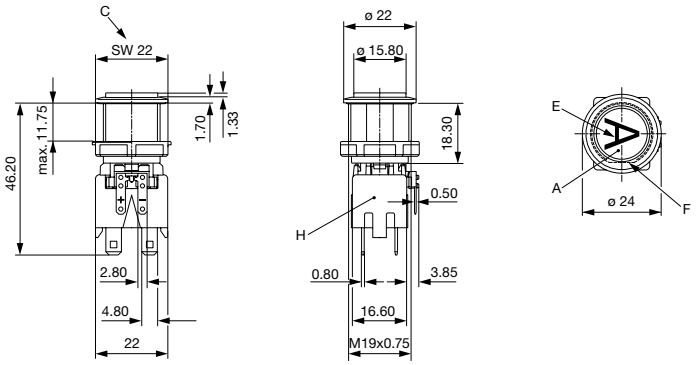

MSM 22 LA PI double-pole

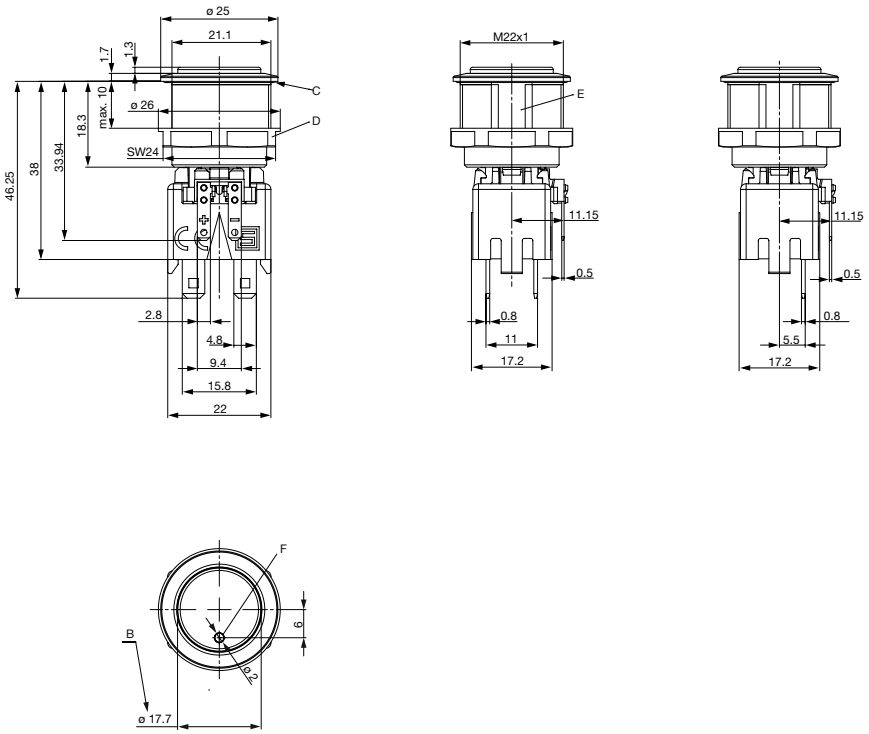

MSM 22 LA RI double-pole

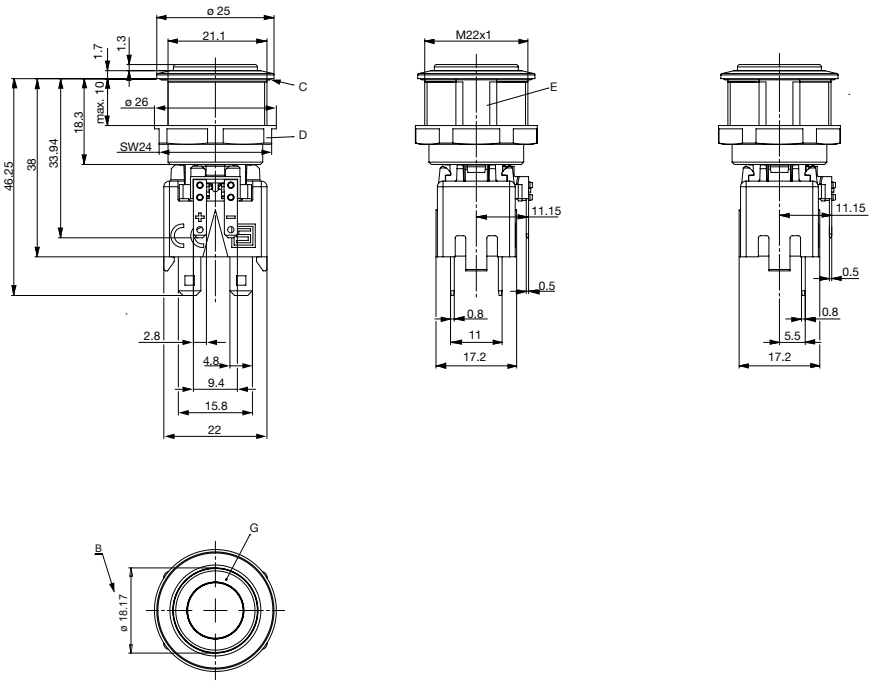

MSM 22 LA AI double-pole

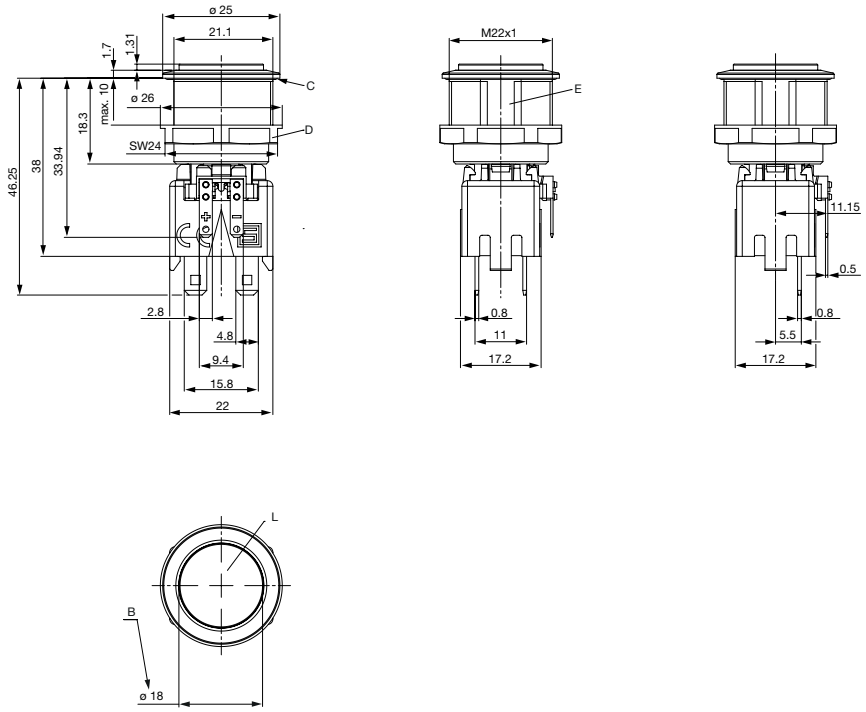

Legend to MSM Latching

B	Actuating Area
C	Sealing
D	Nut
E	Anti-rotation protection
L	Illuminated Area

MSM MO AI double-pole

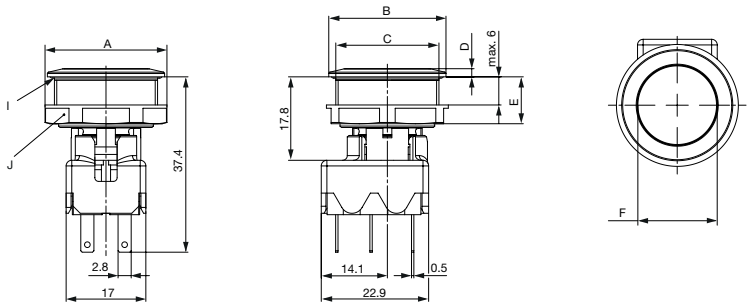

MSM MO RI single-pole

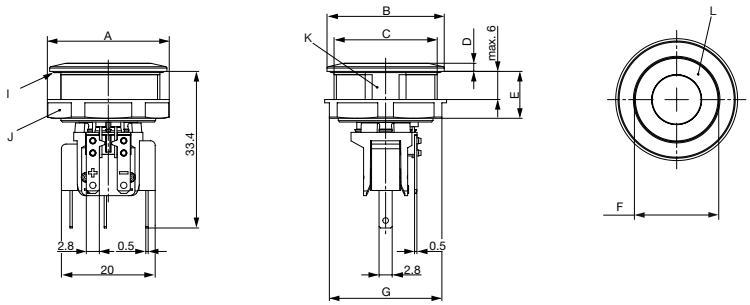

MSM MO RI double-pole

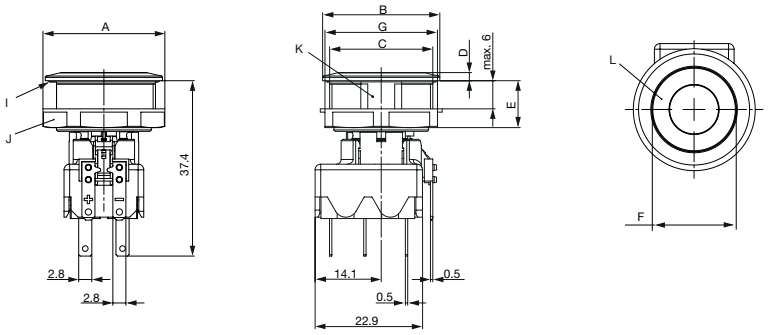

MSM MO PI single-pole

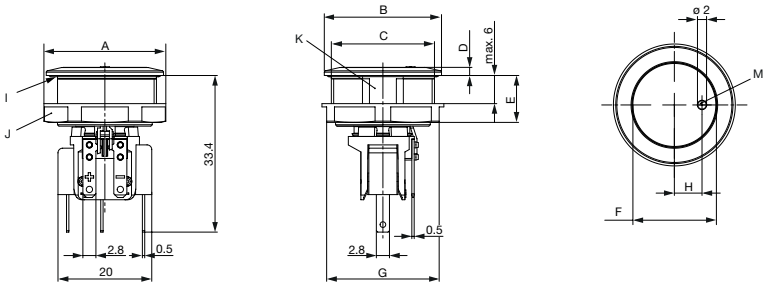

MSM MO PI double-pole

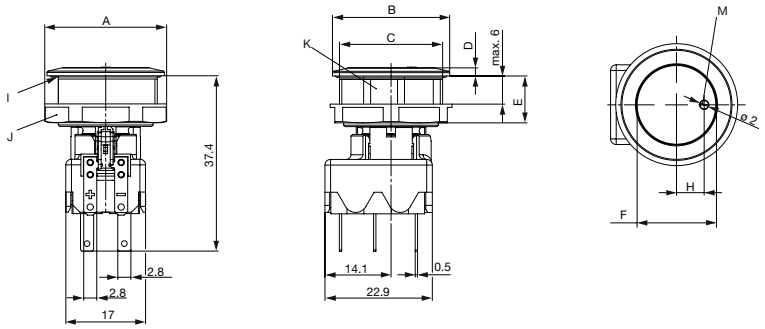

Legend to MSM Momentary

Diameter in mm	16	19	22	30
A	20	24	26	24.5
B	19	22	25	34
C	M16x1	M19x0.75	M22x1	M30x1.5
D	1.74	1.75	1.74	2.04
E	10	10.5	10	11
F Operating area / illumination area	12.8	15.8	18	25
G	AF19	AF22	AF24	AF32
H	-	5.9	5.9	7.9
I	O-Ring			
J	Nut			
K	Anti-rotation lock			
L	Lighting ring			
M	Point illumination			

Tolerance Range

Actuator Tolerance Range

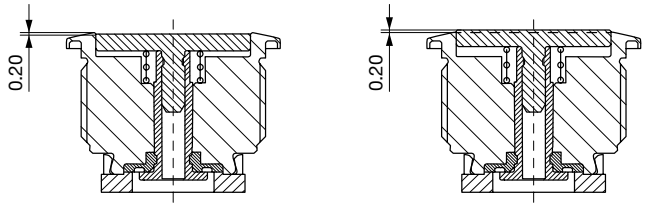

The mounting tolerance range of the actuator varies from 0.2 mm projection length and 0.2 mm short length to the housing edge. The slanting position of the actuator can range within this tolerance.

Dimension

With torsion protection

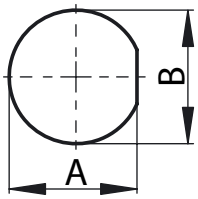

Without torsion protection

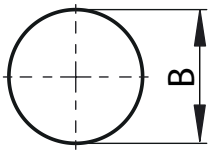

Diameter (mm)	A	B
16	15.15+0.05	16.1 +0.1
19	18.15+0.05	19.1 +0.1
22	21.15+0.05	22.1 +0.1
24	23.50+0.05	24.1 +0.1
30	28.85+0.05	30.1 +0.1

Assembly Instructions

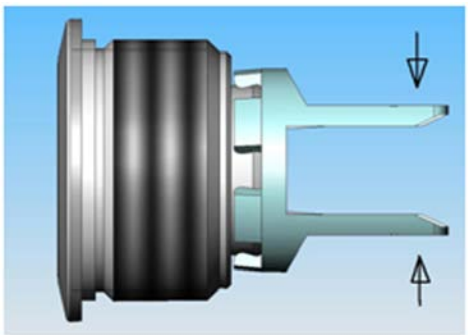

During assembly, the protruding bars of the holder should not be pressed together.

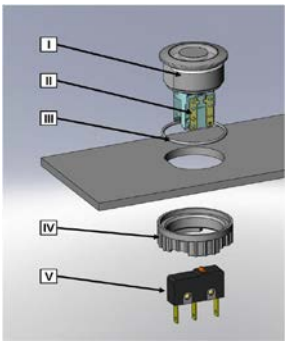

I Housing
II Flat Pin Terminal (Illumination)
III O-Ring gasket
IV Nut (Nut type see Dimensions)
V Module Switching Contact

Installation Instruction:
1. Place the gasket accurately on the actuator housing. Then mount the actuator housing assembly into the panel.
2. Tighten the screw nut according to the torque instructions.
3. Clasp the module switching contact into the micro switch holder of the actuator housing.

Installation information:
- The power supply and the configuration of the flat pin terminals have to be installed correctly for the illumination and micro switch function.
- Insulate the terminals as required. Fully insulated plug-in sleeves are recommended.
- Installation instructions according to VDE-standard DIN VDE 0100-100 or alternatively IEC 60354 standard.
- During assembly, the protruding bars of the holder should not be pressed together.

Diagrams

Point Illumination single-pole

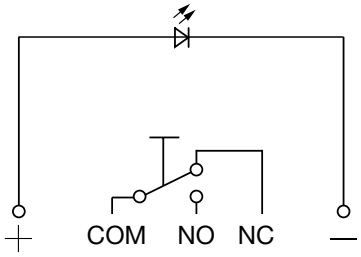

Area illumination single-pole

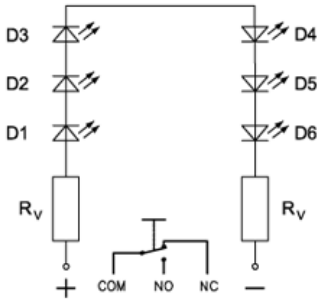

Point illumination double-pole

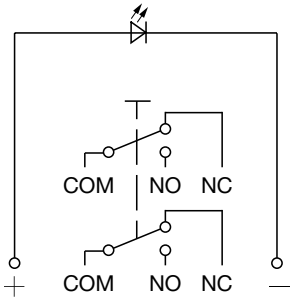

Ring illumination double-pole

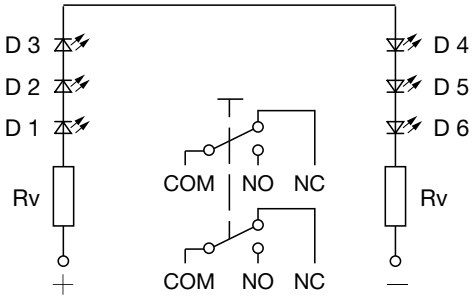

Illumination options for RGB

Lighting type	Wire red	Wire green	Wire blue	Resulting Color
Multicolor Singlecolor	x			Red
Multicolor Singlecolor		x		Green
Multicolor Singlecolor			x	Blue
Multicolor RGB Additive 2	x	x		Yellow
Multicolor RGB Additive 2	x		x	Magenta
Multicolor RGB Additive 2		x	x	Cyan
Multicolor RGB Additive 3	x	x	x	White

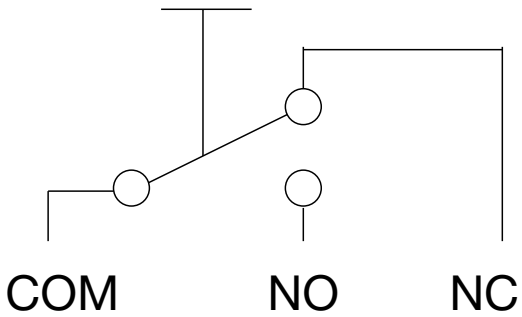

Point Illumination

Operating Data	Forward Current max.	Forward Voltage at 10 mA	Forward Voltage max.
LED red	30 mA	1.9 VDC	3.0 VDC
LED green	30 mA	2.4 VDC	3.0 VDC
LED yellow	30 mA	2.4 VDC	3.0 VDC
LED blue	20 mA	3.8 VDC	4.5 VDC
LED red/green	25 mA	2.0 VDC	2.5 VDC

Attention: Switches with point illumination (PI) are delivered without series resistor.

Micro Switch

Micro Switch	Contact Material	Switching Voltage	Switching current	Rated Switching Capacity	Lifetime	Contact Resistance	Insulation Resistance	Duration of Bounce
0.1 A, IP40	Au	max. 30 VDC	max. 0.1 A	3 W	0.2 Mio.	< 50 mΩ	> 100 MΩ	< 5 ms
0.1 A, IP67		max. 30 VDC	max. 0.1 A	25 W	0.05 Mio.			
5 A / 125 VAC bzw. 3 A / 250 VAC, IP40	Ag	max. 125 / 250 VAC	max. 5 / 3 A	750 W	0.2 Mio.	< 30 mΩ	> 100 MΩ	< 5 ms
6 A, IP67		max. 250 VAC	max. 5 A	1250 W	0.01 Mio.			
10 A, IP40	Ag	max. 250 VAC	max. 10 A	2500 W	0.05 Mio.	< 30 mΩ	> 100 MΩ	< 5 ms
10 A, IP67		max. 250 VAC	max. 10 A	2500 W	0.01 Mio.			
12 A, IP40	Ag	max. 250 VAC	max. 12 A	3000 W	0.05 Mio.	< 100 mΩ		
16 A, IP40	Ag	max. 250 VAC	max. 16 A	4000 W	0.04 Mio.	< 100 mΩ	> 100 MΩ	

Marking

The last three digits in the order number define the lettering:	
000	No Lettering
001-074	Standard Lettering
101-	Customized Lettering

Order Index Lettering

Laser Marking			
001 =**A**	021 =**U**	041 =**÷**	061 =**EIN**
002 =**B**	022 =**V**	042 = ✳	062 =**AUS**
003 =**C**	023 =**W**	043 =**=**	063 =**AUF**
004 =**D**	024 =**X**	044 = #	064 =**AB**
005 =**E**	025 =**Y**	045 = ↔	065 =**ON**
006 =**F**	026 =**Z**	046 = ↕	066 =**OFF**
007 =**G**	027 =**0**	047 = →	067 =**UP**
008 =**H**	028 =**1**	048 = ←	068 =**DOWN**
009 =**I**	029 =**2**	049 = ↓	069 =**HIGH**
010 =**J**	030 =**3**	050 = ↑	070 =**LOW**
011 =**K**	031 =**4**	051 = %	071 =**ON/OFF**
012 =**L**	032 =**5**	052 = √	072 =**START**
013 =**M**	033 =**6**	053 =**CTRL**	073 =**RESET**
014 =**N**	034 =**7**	054 =**RETURN**	074 =2023-04-18 ⏻
015 =**O**	035 =**8**	055 =**SHIFT**	075 =2023-04-18
016 =**P**	036 =**9**	056 =**LOCK**	076 =2023-04-18
017 =**Q**	037 =**+**	057 =**STOP**	077 =2023-04-18
018 =**R**	038 =**-**	058 =**ENTER**	
019 =**S**	039 =**.**	059 =**BACK**	
020 =**T**	040 = x	060 =**LINE**	
Please note that the font size depends on the number of characters			

Order number key

M	S	M	-	19	-	MO	NX	A10	-	B	-	A	A0	-	A	-	PI	0GN	00R	0	A0	-	S0	NC	B	-	SO	NC	NF	-	0	000	-	C
				1		2	3	4		5		6	7		8		9	10	11	12	13		14	15	16		17	18	19		20	21		22

Diameter			1
16 mm	=	16	
19 mm	=	19	
22 mm	=	22	
30 mm	=	30	

Switch type			2
Latching	=	LA	
Momentary	=	MO	

Switch function			3
Change over contact	=	NX	
Normally open	=	NO	

Switching current			4
100mA	=	A10	
5A	=	05A	
6A	=	06A	
10A	=	10A	
12A	=	12A	
16A	=	16A	

Contact configuartion			5
SPST	=	A	
SPDT	=	B	
DPST	=	C	
DPDT	=	D	

Contact material			6
Gold	=	A	
Silver	=	B	

Terminal switch			7
QC 2.8 x 0.5	=	A0	
QC 6.3 x 0.5	=	A1	
QC 4.8 x 0.8	=	A4	
Cable - 200 mm	=	B0	
Cable - 500 mm	=	B1	
Wire harness	=	F1	

Switch IP specification			8
None	=	0	
IP40	=	A	
IP67	=	B	

Illumination type			9
Area illumination	=	AI	
Ring illumination	=	RI	
Point illumination	=	PI	
Ring illumination (Dead Front)	=	RD	

Illumination color			10
Red	=	0RD	
Green	=	0GN	
Blue	=	0BL	
Yellow	=	0YL	
White	=	0WT	
Orange	=	0OR	
Violet	=	0VT	
Multicolor	=	RGB	
Red-Green	=	0RG	
Green-Yellow	=	0GY	

Supply voltage illumination			11
5 V	=	005	
12 V	=	012	
24 V	=	024	
W/O (without) resistors	=	00R	

Illumination sub type			12
Standard	=	0	
Bright	=	1	
Scaled	=	2	
Homogen-scaled	=	4	
Homogen	=	3	
Bright-homogen	=	5	
Bright-homogen-scaled	=	7	

Terminal illumination			13
None	=	00	
Switch integrated	=	C0	

Housing material			14
Stainless steel	=	S0	
Aluminum	=	A0	

M	S	M	-	19	-	MO	NX	A10	-	B	-	A	A0	-	A	-	PI	0GN	00R	0	A0	-	S0	NC	B	-	SO	NC	NF	-	0	000	-	C
				1		2	3	4		5		6	7		8		9	10	11	12	13		14	15	16		17	18	19		20	21		22

Housing color			15
Neutral	=	NC	
Red	=	RD	
Green	=	GN	
Black	=	BK	

Mounting			16
None	=	0	
Thread (M) without antirotation protection	=	A	
Thread (M) with antirotation protection	=	B	
Snap 1.5 mm	=	D	
Snap 2 mm	=	E	

Actuator material			17
Ceramics	=	C0	
Stainless steel	=	S0	
Aluminum	=	A0	

Actuator color			18
White	=	WT	
Neutral	=	NC	
Red	=	RD	
Green	=	GN	
Black	=	BK	

Actuator style			19
No Finger guide	=	NF	

Lettering type			20
None	=	0	
Laser	=	1	

Marking type			21
None	=	000	

See in the table "Order Index Lettering"

Accessories			22
None	=	0	
Hex nut stainless steel with O-Ring	=	A	
Hex nut plastic with O-Ring	=	C	
Hex nut plastic with O-Ring and screw terminal	=	D	

All Variants

Diameter	Switch type	Switching current	Electrical contact	IP specification backside	Illumination	Illumination color	Housing material	Order Number
16	MO	10 A	SPDT	IP40	RI homogeneous	red	Stainless Steel	3-102-620
16	MO	100 mA	SPDT	IP40	RI homogeneous	green	Stainless Steel	3-102-621
16	MO	10 A	SPDT	IP40	RI homogeneous	green	Stainless Steel	3-102-623
16	MO	100 mA	SPDT	IP40	RI homogeneous	blue	Stainless Steel	3-102-624
16	MO	10 A	SPDT	IP40	RI homogeneous	blue	Stainless Steel	3-102-626
16	MO	100 mA	SPDT	IP40	RI homogeneous	yellow	Stainless Steel	3-102-627
16	MO	10 A	SPDT	IP40	RI homogeneous	yellow	Stainless Steel	3-102-629
16	MO	100 mA	SPDT	IP40	RI homogeneous	white	Stainless Steel	3-102-630
16	MO	10 A	SPDT	IP40	RI homogeneous	white	Stainless Steel	3-102-632
16	MO	100 mA	SPDT	IP40	Area illumination	red	Stainless Steel	3-102-633
16	MO	5 A	SPDT	IP40	Area illumination	red	Stainless Steel	3-102-634
16	MO	10 A	SPDT	IP40	Area illumination	red	Stainless Steel	3-102-635
16	MO	100 mA	SPDT	IP40	Area illumination	green	Stainless Steel	3-102-636
16	MO	5 A	SPDT	IP40	Area illumination	green	Stainless Steel	3-102-637
16	MO	10 A	SPDT	IP40	Area illumination	green	Stainless Steel	3-102-639
16	MO	100 mA	SPDT	IP40	Area illumination	blue	Stainless Steel	3-102-640
16	MO	5 A	SPDT	IP40	Area illumination	blue	Stainless Steel	3-102-641
16	MO	10 A	SPDT	IP40	Area illumination	blue	Stainless Steel	3-102-642
16	MO	100 mA	SPDT	IP40	Area illumination	yellow	Stainless Steel	3-102-643
16	MO	5 A	SPDT	IP40	Area illumination	yellow	Stainless Steel	3-102-644
16	MO	10 A	SPDT	IP40	Area illumination	yellow	Stainless Steel	3-102-645
16	MO	100 mA	SPDT	IP40	Area illumination	white	Stainless Steel	3-102-646
16	MO	5 A	SPDT	IP40	Area illumination	white	Stainless Steel	3-102-647
16	MO	10 A	SPDT	IP40	Area illumination	white	Stainless Steel	3-102-648
16	MO	5 A	SPDT	IP40	Ring illumination RD	white	Aluminum	3-137-051
19	MO	100 mA	SPDT	IP40	Point Illumination	red	Stainless Steel	1241.6623.1111000
19	MO	100 mA	SPDT	IP40	Point Illumination	green	Stainless Steel	1241.6623.1112000
19	MO	5 A	SPDT	IP40	Point Illumination	red	Stainless Steel	1241.6623.1121000
19	MO	5 A	SPDT	IP40	Point Illumination	green	Stainless Steel	1241.6623.1122000
19	MO	5 A	SPDT	IP40	Point Illumination	blue	Stainless Steel	1241.6623.1124000
19	MO	10 A	SPDT	IP40	Point Illumination	red	Stainless Steel	1241.6623.1131000
19	MO	10 A	SPDT	IP40	Point Illumination	green	Stainless Steel	1241.6623.1132000
19	MO	100 mA	SPDT	IP40	RI dotted	red	Stainless Steel	1241.6624.1111000
19	MO	100 mA	SPDT	IP40	RI dotted	red	Stainless Steel	
19	MO	100 mA	SPDT	IP40	RI dotted	green	Stainless Steel	1241.6624.1112000
19	MO	100 mA	SPDT	IP40	RI dotted	yellow	Stainless Steel	1241.6624.1113000
19	MO	100 mA	SPDT	IP40	RI dotted	blue	Stainless Steel	1241.6624.1114000
19	MO	100 mA	SPDT	IP40	RI dotted	blue	Stainless Steel	1241.6624.1114074
19	MO	5 A	SPDT	IP40	RI dotted	red	Stainless Steel	1241.6624.1121000
19	MO	5 A	SPDT	IP40	RI dotted	green	Stainless Steel	1241.6624.1122000
19	MO	5 A	SPDT	IP40	RI dotted	blue	Stainless Steel	1241.6624.1124000
19	MO	5 A	SPDT	IP40	RI dotted	white	Stainless Steel	1241.6624.1125000
19	MO	10 A	SPDT	IP40	RI dotted	red	Stainless Steel	1241.6624.1131000
19	MO	10 A	SPDT	IP40	RI dotted	green	Stainless Steel	1241.6624.1132000
19	MO	10 A	SPDT	IP40	RI dotted	blue	Stainless Steel	1241.6624.1134000
19	MO	6 A	SPDT	IP67	RI dotted	red	Stainless Steel	1241.6624.1181000
19	MO	6 A	SPDT	IP67	RI dotted	green	Stainless Steel	1241.6624.1182000

Diameter	Switch type	Switching current	Electrical contact	IP specification backside	Illumination	Illumination color	Housing material	Order Number
19	MO	5 A	DPDT	IP40	Point Illumination	red	Stainless Steel	1241.6923.1121000
19	MO	5 A	DPDT	IP40	Point Illumination	green	Stainless Steel	1241.6923.1122000
19	MO	5 A	DPDT	IP40	Point Illumination	blue	Stainless Steel	1241.6923.1124000
19	MO	5 A	DPDT	IP40	RI dotted	red	Stainless Steel	1241.6924.1121000
19	MO	5 A	DPDT	IP40	RI dotted	green	Stainless Steel	1241.6924.1122000
19	MO	5 A	DPDT	IP40	RI dotted	blue	Stainless Steel	1241.6924.1124000
19	MO	100 mA	SPDT	IP40	Area illumination	red	Stainless Steel	1241.8412
19	MO	100 mA	SPDT	IP40	Area illumination	green	Stainless Steel	1241.8413
19	MO	100 mA	SPDT	IP40	Area illumination	blue	Stainless Steel	1241.8415
19	MO	100 mA	SPDT	IP40	Area illumination	white	Stainless Steel	1241.8416
19	MO	10 A	SPDT	IP40	Area illumination	red	Stainless Steel	1241.8448
19	MO	10 A	SPDT	IP40	Area illumination	green	Stainless Steel	1241.8449
19	MO	10 A	SPDT	IP40	Area illumination	blue	Stainless Steel	1241.8451
19	MO	10 A	SPDT	IP40	Area illumination	white	Stainless Steel	1241.8452
19	LA	12 A	SPST	IP40	Area illumination	yellow	Stainless Steel	1241.8546
19	LA	12 A	SPST	IP40	Area illumination	orange	Stainless Steel	1241.8549
19	LA	12 A	DPST	IP40	Area illumination	yellow	Stainless Steel	1241.8552
19	LA	12 A	DPST	IP40	Area illumination	orange	Stainless Steel	1241.8555
19	LA	16 A	SPST	IP40	RI dotted	red	Stainless Steel	3-100-990
19	LA	16 A	SPST	IP40	RI dotted	green	Stainless Steel	3-100-991
19	LA	16 A	DPST	IP40	RI dotted	blue	Stainless Steel	3-100-999
19	LA	16 A	SPST	IP40	RI dotted	blue	Stainless Steel	3-101-002
19	LA	16 A	DPST	IP40	RI dotted	red	Stainless Steel	3-101-003
19	LA	16 A	DPST	IP40	RI dotted	green	Stainless Steel	3-101-004
19	LA	16 A	SPST	IP40	Area illumination	green	Stainless Steel	3-101-007
19	LA	16 A	SPST	IP40	Area illumination	blue	Stainless Steel	3-101-009
19	LA	16 A	DPST	IP40	Area illumination	blue	Stainless Steel	3-101-010
19	LA	16 A	DPST	IP40	Area illumination	white	Stainless Steel	3-101-011
19	LA	16 A	SPST	IP40	Area illumination	white	Stainless Steel	3-101-022
19	LA	16 A	DPST	IP40	Area illumination	red	Stainless Steel	3-101-023
19	LA	16 A	DPST	IP40	Area illumination	green	Stainless Steel	3-101-024
19	MO	5 A	SPDT	IP40	Point Illumination	green / yellow	Stainless Steel	3-101-515
19	MO	100 mA	SPDT	IP40	RI homogeneous	RGB	Stainless Steel	3-102-708
19	MO	10 A	SPDT	IP40	RI homogeneous	RGB	Stainless Steel	3-102-772
19	MO	100 mA	SPDT	IP40	Area illumination	RGB	Stainless Steel	3-102-788
19	MO	5 A	SPDT	IP40	Area illumination	RGB	Stainless Steel	3-102-789
19	MO	10 A	SPDT	IP40	Area illumination	RGB	Stainless Steel	3-102-790
19	MO	100 mA	SPDT	IP40	RI homogeneous	green	Stainless Steel	3-108-945
19	MO	5 A	SPDT	IP40	RI homogeneous	green	Stainless Steel	3-108-946
19	MO	10 A	SPDT	IP40	RI homogeneous	green	Stainless Steel	3-108-947
19	MO	100 mA	SPDT	IP40	RI homogeneous	blue	Stainless Steel	3-108-948
19	MO	5 A	SPDT	IP40	RI homogeneous	blue	Stainless Steel	3-108-949
19	MO	10 A	SPDT	IP40	RI homogeneous	blue	Stainless Steel	3-108-950
19	MO	5 A	DPDT	IP40	RI homogeneous	red	Stainless Steel	3-108-951
19	MO	100 mA	SPDT	IP40	RI homogeneous	red	Stainless Steel	3-108-952
19	MO	5 A	SPDT	IP40	RI homogeneous	red	Stainless Steel	3-108-953
19	MO	10 A	SPDT	IP40	RI homogeneous	red	Stainless Steel	3-108-954
19	MO	5 A	DPDT	IP40	RI homogeneous	green	Stainless Steel	3-108-962
19	MO	5 A	DPDT	IP40	RI homogeneous	blue	Stainless Steel	3-108-963

Diameter	Switch type	Switching current	Electrical contact	IP specification backside	Illumination	Illumination color	Housing material	Order Number
19	MO	5 A	SPDT	IP40	Area illumination	green	Stainless Steel	3-120-088
19	MO	5 A	SPDT	IP40	Area illumination	blue	Stainless Steel	3-120-089
19	MO	5 A	SPDT	IP40	Area illumination	red	Stainless Steel	3-120-103
19	MO	6 A	SPDT	IP67	Area illumination	red	Stainless Steel	3-120-115
19	MO	5 A	SPDT	IP40	Ring illumination RD	white	Aluminum	3-137-082
19	MO	5 A	SPDT	IP40	Ring illumination RD	RGB	Aluminum	3-137-085
19	LA	12 A	SPST	IP40	Point Illumination	red	Stainless Steel	1241.6823.1111000
19	LA	12 A	SPST	IP40	Area illumination	red	Stainless Steel	1241.8544
19	LA	12 A	SPST	IP40	Point Illumination	green	Stainless Steel	1241.6823.1112000
19	LA	12 A	SPST	IP40	Point Illumination	blue	Stainless Steel	1241.6823.1114000
19	LA	12 A	SPST	IP40	Area illumination	green	Stainless Steel	1241.8545
19	LA	12 A	SPST	IP40	RI dotted	red	Stainless Steel	1241.6824.1111000
19	LA	12 A	SPST	IP40	RI dotted	green	Stainless Steel	1241.6824.1112000
19	LA	12 A	SPST	IP40	Area illumination	blue	Stainless Steel	1241.8547
19	LA	12 A	SPST	IP40	RI dotted	blue	Stainless Steel	1241.6824.1114000
19	LA	12 A	SPST	IP40	RI dotted	white	Stainless Steel	1241.6824.1115000
19	LA	12 A	SPST	IP40	Area illumination	white	Stainless Steel	1241.8548
19	LA	12 A	DPST	IP40	Point Illumination	red	Stainless Steel	1241.6823.1121000
19	LA	12 A	DPST	IP40	Point Illumination	green	Stainless Steel	1241.6823.1122000
19	LA	12 A	DPST	IP40	Point Illumination	blue	Stainless Steel	1241.6823.1124000
19	LA	12 A	DPST	IP40	RI dotted	red	Stainless Steel	1241.6824.1121000
19	LA	12 A	DPST	IP40	RI dotted	green	Stainless Steel	1241.6824.1122000
19	LA	12 A	DPST	IP40	RI dotted	blue	Stainless Steel	1241.6824.1124000
19	LA	12 A	DPST	IP40	Area illumination	red	Stainless Steel	1241.8550
19	LA	12 A	DPST	IP40	Area illumination	green	Stainless Steel	1241.8551
19	LA	12 A	DPST	IP40	Area illumination	blue	Stainless Steel	1241.8553
19	LA	12 A	DPST	IP40	Area illumination	white	Stainless Steel	1241.8554
22	MO	100 mA	SPDT	IP40	Point Illumination	red	Stainless Steel	1241.6633.1111000
22	MO	100 mA	SPDT	IP40	Point Illumination	green	Stainless Steel	1241.6633.1112000
22	MO	100 mA	SPDT	IP40	Point Illumination	blue	Stainless Steel	1241.6633.1114000
22	MO	5 A	SPDT	IP40	Point Illumination	red	Stainless Steel	1241.6633.1121000
22	MO	5 A	SPDT	IP40	Point Illumination	green	Stainless Steel	1241.6633.1122000
22	MO	5 A	SPDT	IP40	Point Illumination	blue	Stainless Steel	1241.6633.1124000
22	MO	5 A	SPDT	IP40	Point Illumination	red / green	Stainless Steel	1241.6633.1126000
22	MO	10 A	SPDT	IP40	Point Illumination	red	Stainless Steel	1241.6633.1131000
22	MO	10 A	SPDT	IP40	Point Illumination	green	Stainless Steel	1241.6633.1132000
22	MO	10 A	SPDT	IP40	Point Illumination	blue	Stainless Steel	1241.6633.1134000
22	MO	100 mA	SPDT	IP40	RI dotted	red	Stainless Steel	1241.6634.1111000
22	MO	100 mA	SPDT	IP40	RI dotted	green	Stainless Steel	1241.6634.1112000
22	MO	100 mA	SPDT	IP40	RI dotted	yellow	Stainless Steel	1241.6634.1113000
22	MO	100 mA	SPDT	IP40	RI dotted	blue	Stainless Steel	1241.6634.1114000
22	MO	5 A	SPDT	IP40	RI dotted	red	Stainless Steel	1241.6634.1121000
22	MO	5 A	SPDT	IP40	RI dotted	green	Stainless Steel	1241.6634.1122000
22	MO	5 A	SPDT	IP40	RI dotted	yellow	Stainless Steel	1241.6634.1123000
22	MO	5 A	SPDT	IP40	RI dotted	blue	Stainless Steel	1241.6634.1124000
22	MO	5 A	SPDT	IP40	RI dotted	white	Stainless Steel	1241.6634.1125000
22	MO	10 A	SPDT	IP40	RI dotted	red	Stainless Steel	1241.6634.1131000
22	MO	10 A	SPDT	IP40	RI dotted	green	Stainless Steel	1241.6634.1132000

Diameter	Switch type	Switching current	Electrical contact	IP specification backside	Illumination	Illumination color	Housing material	Order Number
22	MO	6 A	SPDT	IP67	RI dotted	red	Stainless Steel	1241.6634.1181000
22	MO	6 A	SPDT	IP67	RI dotted	green	Stainless Steel	1241.6634.1182000
22	MO	6 A	SPDT	IP67	RI dotted	blue	Stainless Steel	1241.6634.1184000
22	MO	5 A	SPDT	IP40	Point Illumination	red	Stainless Steel	1241.6693.1121000
22	MO	5 A	SPDT	IP40	Point Illumination	green	Stainless Steel	1241.6693.1122000
22	MO	5 A	DPDT	IP40	Point Illumination	red	Stainless Steel	1241.6933.1121000
22	MO	5 A	DPDT	IP40	Point Illumination	green	Stainless Steel	1241.6933.1122000
22	MO	5 A	DPDT	IP40	Point Illumination	blue	Stainless Steel	1241.6933.1124000
22	MO	5 A	DPDT	IP40	RI dotted	red	Stainless Steel	1241.6934.1121000
22	MO	5 A	DPDT	IP40	RI dotted	green	Stainless Steel	1241.6934.1122000
22	MO	5 A	DPDT	IP40	RI dotted	blue	Stainless Steel	1241.6934.1124000
22	LA	16 A	DPST	IP40	RI dotted	green	Stainless Steel	3-100-912
22	LA	16 A	SPST	IP40	non-illuminated	-	Stainless Steel	3-101-005
22	LA	16 A	SPST	IP40	RI dotted	red	Stainless Steel	3-101-013
22	LA	16 A	SPST	IP40	RI dotted	green	Stainless Steel	3-101-014
22	LA	16 A	SPST	IP40	RI dotted	blue	Stainless Steel	3-101-015
22	LA	16 A	DPST	IP40	RI dotted	red	Stainless Steel	3-101-016
22	LA	16 A	DPST	IP40	RI dotted	blue	Stainless Steel	3-101-018
22	LA	16 A	SPST	IP40	Area illumination	blue	Stainless Steel	3-101-029
22	LA	16 A	SPST	IP40	Area illumination	white	Stainless Steel	3-101-030
22	LA	16 A	DPST	IP40	Area illumination	red	Stainless Steel	3-101-031
22	LA	16 A	SPST	IP40	Area illumination	red	Stainless Steel	3-101-032
22	LA	16 A	SPST	IP40	Area illumination	green	Stainless Steel	3-101-033
22	LA	16 A	DPST	IP40	Area illumination	green	Stainless Steel	3-101-039
22	LA	16 A	DPST	IP40	Area illumination	blue	Stainless Steel	3-101-040
22	LA	16 A	DPST	IP40	Area illumination	white	Stainless Steel	3-101-041
22	MO	100 mA	SPDT	IP40	RI homogeneous	RGB	Stainless Steel	3-102-773
22	MO	100 mA	SPDT	IP40	Area illumination	RGB	Stainless Steel	3-102-774
22	MO	5 A	SPDT	IP40	Area illumination	RGB	Stainless Steel	3-102-775
22	MO	10 A	SPDT	IP40	Area illumination	RGB	Stainless Steel	3-102-776
22	MO	10 A	SPDT	IP40	RI homogeneous	RGB	Stainless Steel	3-102-784
22	MO	100 mA	SPDT	IP40	RI homogeneous	red	Stainless Steel	3-108-955
22	MO	5 A	SPDT	IP40	RI homogeneous	red	Stainless Steel	3-108-956
22	MO	10 A	SPDT	IP40	RI homogeneous	red	Stainless Steel	3-108-957
22	MO	100 mA	SPDT	IP40	RI homogeneous	green	Stainless Steel	3-108-958
22	MO	5 A	SPDT	IP40	RI homogeneous	green	Stainless Steel	3-108-959
22	MO	10 A	SPDT	IP40	RI homogeneous	green	Stainless Steel	3-108-960
22	MO	100 mA	SPDT	IP40	RI homogeneous	blue	Stainless Steel	3-108-961
22	MO	5 A	SPDT	IP40	RI homogeneous	blue	Stainless Steel	3-108-972
22	MO	10 A	SPDT	IP40	RI homogeneous	blue	Stainless Steel	3-108-973
22	MO	5 A	DPDT	IP40	RI homogeneous	red	Stainless Steel	3-108-974
22	MO	5 A	DPDT	IP40	RI homogeneous	green	Stainless Steel	3-108-975
22	MO	5 A	DPDT	IP40	RI homogeneous	blue	Stainless Steel	3-108-976
22	MO	100 mA	SPDT	IP67	RI homogeneous	RGB	Stainless Steel	3-109-580
22	MO	5 A	SPDT	IP40	Area illumination	blue	Stainless Steel	3-120-106
22	MO	5 A	SPDT	IP40	Area illumination	white	Stainless Steel	3-120-107
22	MO	5 A	SPDT	IP40	Area illumination	red	Stainless Steel	3-120-119
22	MO	5 A	SPDT	IP40	Area illumination	green	Stainless Steel	3-120-124

Diameter	Switch type	Switching current	Electrical contact	IP specification backside	Illumination	Illumination color	Housing material	Order Number
22	MO	5 A	SPDT	IP40	Ring illumination RD	red	Aluminum	3-137-083
22	MO	5 A	SPDT	IP40	Ring illumination RD	RGB	Aluminum	3-137-086
22	MO	5 A	SPDT	IP40	Ring illumination RD	green	Aluminum	3-137-088
22	MO	5 A	SPDT	IP40	Ring illumination RD	blue	Aluminum	3-137-089
22	MO	5 A	SPDT	IP40	Ring illumination RD	yellow	Aluminum	3-137-090
22	MO	100 mA	SPDT	IP40	Ring illumination RD	white	Aluminum	3-137-091
22	MO	5 A	SPDT	IP40	Ring illumination RD	white	Aluminum	3-137-092
22	MO	10 A	SPDT	IP40	Ring illumination RD	white	Aluminum	3-137-093
22	MO	100 mA	SPDT	IP40	Ring illumination RD	RGB	Aluminum	3-137-094
22	MO	10 A	SPDT	IP40	Ring illumination RD	RGB	Aluminum	3-137-095
22	MO	100 mA	SPDT	IP40	Area illumination	red	Stainless Steel	1241.8484
22	MO	100 mA	SPDT	IP40	Area illumination	green	Stainless Steel	1241.8485
22	MO	100 mA	SPDT	IP40	Area illumination	blue	Stainless Steel	1241.8487
22	MO	100 mA	SPDT	IP40	Area illumination	white	Stainless Steel	1241.8488
22	MO	10 A	SPDT	IP40	Area illumination	red	Stainless Steel	1241.8520
22	MO	10 A	SPDT	IP40	Area illumination	green	Stainless Steel	1241.8521
22	MO	10 A	SPDT	IP40	Area illumination	blue	Stainless Steel	1241.8523
22	MO	10 A	SPDT	IP40	Area illumination	white	Stainless Steel	1241.8524
22	LA	12 A	SPST	IP40	Point Illumination	red	Stainless Steel	1241.6833.1111000
22	LA	12 A	SPST	IP40	Point Illumination	green	Stainless Steel	1241.6833.1112000
22	LA	12 A	SPST	IP40	Point Illumination	blue	Stainless Steel	1241.6833.1114000
22	LA	12 A	SPST	IP40	RI dotted	red	Stainless Steel	1241.6834.1111000
22	LA	12 A	SPST	IP40	RI dotted	green	Stainless Steel	1241.6834.1112000
22	LA	12 A	SPST	IP40	RI dotted	blue	Stainless Steel	1241.6834.1114000
22	LA	12 A	DPST	IP40	Point Illumination	red	Stainless Steel	1241.6833.1121000
22	LA	12 A	DPST	IP40	Point Illumination	green	Stainless Steel	1241.6833.1122000
22	LA	12 A	DPST	IP40	Point Illumination	blue	Stainless Steel	1241.6833.1124000
22	LA	12 A	DPST	IP40	RI dotted	red	Stainless Steel	1241.6834.1121000
22	LA	12 A	DPST	IP40	RI dotted	green	Stainless Steel	1241.6834.1122000
22	LA	12 A	DPST	IP40	RI dotted	blue	Stainless Steel	1241.6834.1124000
22	LA	12 A	SPST	IP40	Area illumination	red	Stainless Steel	1241.8556
22	LA	12 A	SPST	IP40	Area illumination	green	Stainless Steel	1241.8557
22	LA	12 A	SPST	IP40	Area illumination	blue	Stainless Steel	1241.8559
22	LA	12 A	SPST	IP40	Area illumination	white	Stainless Steel	1241.8560
22	LA	12 A	DPST	IP40	Area illumination	red	Stainless Steel	1241.8562
22	LA	12 A	DPST	IP40	Area illumination	green	Stainless Steel	1241.8563
22	LA	12 A	DPST	IP40	Area illumination	blue	Stainless Steel	1241.8565
22	LA	12 A	DPST	IP40	Area illumination	white	Stainless Steel	1241.8566
30	MO	100 mA	SPDT	IP40	Point Illumination	red	Stainless Steel	1241.6663.1111000
30	MO	100 mA	SPDT	IP40	Point Illumination	blue	Stainless Steel	1241.6663.1114000
30	MO	5 A	SPDT	IP40	Point Illumination	red	Stainless Steel	1241.6663.1121000
30	MO	5 A	SPDT	IP40	Point Illumination	green	Stainless Steel	1241.6663.1122000
30	MO	5 A	SPDT	IP40	Point Illumination	blue	Stainless Steel	1241.6663.1124000
30	MO	5 A	SPDT	IP40	Point Illumination	white	Stainless Steel	1241.6663.1125000
30	MO	10 A	SPDT	IP40	Point Illumination	green	Stainless Steel	1241.6663.1132000
30	MO	5 A	SPDT	IP40	Point Illumination	red	Aluminum	1241.6663.3121
30	MO	100 mA	SPDT	IP40	RI dotted	red	Stainless Steel	1241.6664.1111000
30	MO	100 mA	SPDT	IP40	RI dotted	green	Stainless Steel	1241.6664.1112000
30	MO	100 mA	SPDT	IP40	RI dotted	yellow	Stainless Steel	1241.6664.1113000

Diameter	Switch type	Switching current	Electrical contact	IP specification backside	Illumination	Illumination color	Housing material	Order Number
30	MO	100 mA	SPDT	IP40	RI dotted	blue	Stainless Steel	1241.6664.1114000
30	MO	5 A	SPDT	IP40	RI dotted	red	Stainless Steel	1241.6664.1121000
30	MO	5 A	SPDT	IP40	RI dotted	green	Stainless Steel	1241.6664.1122000
30	MO	5 A	SPDT	IP40	RI dotted	yellow	Stainless Steel	1241.6664.1123000
30	MO	5 A	SPDT	IP40	RI dotted	blue	Stainless Steel	1241.6664.1124000
30	MO	5 A	SPDT	IP40	RI dotted	white	Stainless Steel	1241.6664.1125000
30	MO	10 A	SPDT	IP40	RI dotted	green	Stainless Steel	1241.6664.1132000
30	MO	10 A	SPDT	IP40	RI dotted	blue	Stainless Steel	1241.6664.1134000
30	MO	5 A	DPDT	IP40	Point Illumination	red	Stainless Steel	1241.6963.1121000
30	MO	5 A	DPDT	IP40	Point Illumination	green	Stainless Steel	1241.6963.1122000
30	MO	5 A	DPDT	IP40	Ring Illumination	red	Stainless Steel	1241.6964.1121000
30	MO	5 A	DPDT	IP40	Ring Illumination	green	Stainless Steel	1241.6964.1122000
30	MO	5 A	DPDT	IP40	Ring Illumination	blue	Stainless Steel	1241.6964.1124000
30	MO	100 mA	SPDT	IP40	RI homogeneous	RGB	Stainless Steel	3-102-785
30	MO	10 A	SPDT	IP40	RI homogeneous	RGB	Stainless Steel	3-102-787
30	MO	100 mA	SPDT	IP40	RI homogeneous	red	Stainless Steel	3-108-964
30	MO	5 A	SPDT	IP40	RI homogeneous	red	Stainless Steel	3-108-965
30	MO	10 A	SPDT	IP40	RI homogeneous	red	Stainless Steel	3-108-966
30	MO	100 mA	SPDT	IP40	RI homogeneous	green	Stainless Steel	3-108-967
30	MO	5 A	SPDT	IP40	RI homogeneous	green	Stainless Steel	3-108-968
30	MO	10 A	SPDT	IP40	RI homogeneous	green	Stainless Steel	3-108-969
30	MO	100 mA	SPDT	IP40	RI homogeneous	blue	Stainless Steel	3-108-977
30	MO	5 A	SPDT	IP40	RI homogeneous	blue	Stainless Steel	3-108-978
30	MO	10 A	SPDT	IP40	RI homogeneous	blue	Stainless Steel	3-108-979
30	MO	5 A	SPDT	IP40	Ring illumination RD	white	Aluminum	3-137-084
30	MO	5 A	SPDT	IP40	Ring illumination RD	RGB	Aluminum	3-137-087

Most Popular.

Availability for all products can be searched real-time:https://www.schurter.com/en/Stock-Check/Stock-Check-SCHURTER

Packaging unit 10 pcs. In box or packed in air cushion bags

The nut with gasket and micro switch are enclosed in the box.

Accessories

	Description
	Power_Supply Power Supply IP42 for LED- and Illumination applications indoor 90~264 VAC => 24 VDC 0.34 A 8 W

18.07.2023

The specifications, descriptions and illustrations indicated in this document are based on current information. All content is subject to modifications and amendments. Information furnished is believed to be accurate and reliable. However, users should independently evaluate the suitability and test each product selected for their own applications.