RAFIX 16 - Universal contact block, gold contacts, with lamp socket, screw terminals

1.20.123.111/0000



Dimensions	
Size not mounted	22 x 25 x 43 mm
Mounting depth (with actuator / indicator)	51.1 mm

Mechanical design	
Mounting	snap on actuator
Contact system	bridge-contact self cleaning
Contact materials	Au
Contact arrangement	1 NC + 1 NO
Contact function	momentary
Lamp socket	W 2 x 4.6d
Terminals	screw terminals
Terminal marking	according to DIN 50013, NC: 11/12 resp. 21/22, NO: 13/14 resp 23/24, lamp: X1 +, X2 -
Operating travel	3 mm
Robustness	100 N

Mechanical characteristics	
Robustness	acc. to IEC 60947-5-5

Electrical characteristics	
Rated voltage min.	0.02 V
Rated voltage AC/DC max.	35 V
Rated current min.	0.001 A
Rated current max.	0.25 A
Operating life switching element (momentary)	2,000,000
Contact resistance when new max.	50 mΩ

Other specifications	
Protection class	II
Shock resistance acc. to IEC 60068-2-27	amplitude < 50g, 11ms, half sinusoidal
Operation temperature min.	-25 °C
Ambient temp. operating max. without lamp / LED	+70 °C
Ambient temp. operating max. with lamp /LED	+55 °C
Storage temperature min.	-40 °C
Storage temperature max.	+85 °C
Color code	white bottom
Environmental restistance	acc. to IEC 60068-2-14, -30, -33 and -78
Mechanical operating life latching (operations)	2,000,000

Technical data are approximate and intended solely for general orientation in the selection of a product.
Subject to modifications and errors. Images and other graphics may only be similar.
For more information, refer to www.rafi.de chapter Imprint / Data Protection.

Resistance to vibrations acc. to IEC 60068-2-6	10 g at 20 ... 500 Hz
	yes
ROHS compliant	yes
REACH compliant	yes

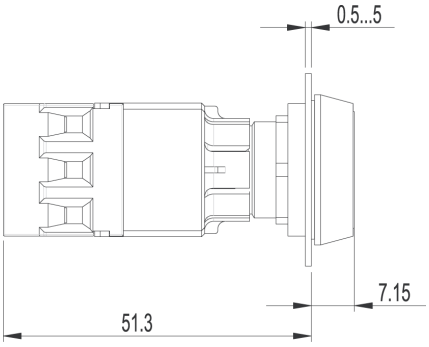

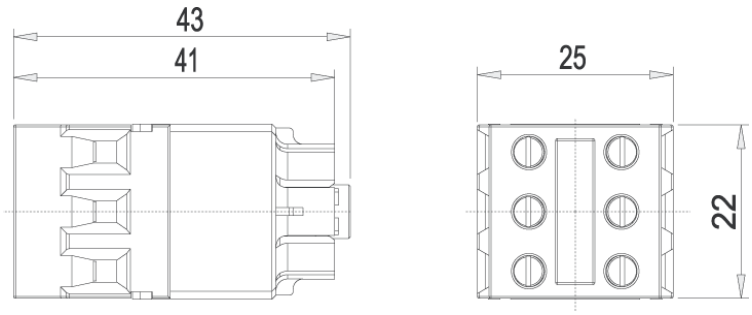

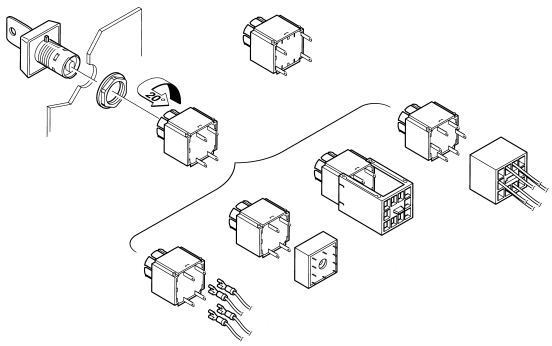

Technical data are approximate and intended solely for general orientation in the selection of a product.
Subject to modifications and errors. Images and other graphics may only be similar.
For more information, refer to www.rafi.de chapter Imprint / Data Protection.