Data Sheet
MICON 5 Short-travel Keyswitches and Accessories

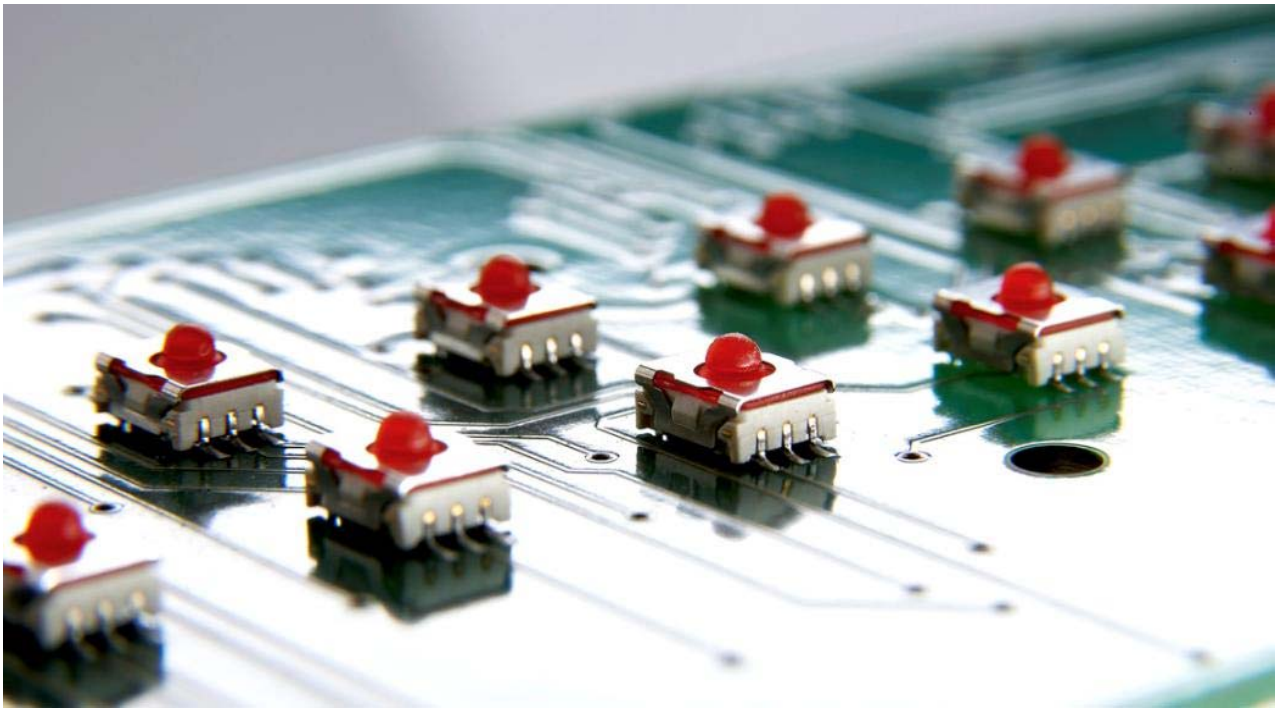

3D data in step or igs format available on request.

Technical data are approximate and intended solely for general orientation in the selection of a product.
Subject to modifications and errors. Images and other graphics may only be similar.
For more information, refer to www.rafi.de chapter Imprint /Data Protection

RAFI GmbH & Co. KG
Ravensburger Str. 128-134, D-88276 Berg/Ravensburg
Tel.: +49 751 89-0, Fax: +49 751 89-1300
www.rafi.de, info@rafi.de

SMT standard version

SMT low version

THT standard version

Terminals	Plunger / height [mm]	Operating force F_1 [N] (+- 20%)	Switching travel S_2 [mm] (+- 0.15 mm)	Operating life [operations] (test force)	Product (type) marking	Order no.
SMT	Standard 3.85	3.0	0.7	1,000,000 (4 N)	X	1.14.002.101/0000
SMT	Standard 3.85	5.5	0.9	1,000,000 (8 N)	W	1.14.002.111/0000
SMT	Standard 3.85	8.0	1.1	250,000 (12 N)	Y	1.14.002.011/0000
SMT	Standard 3.85	3.5	0.85	250,000 (6 N)	K	1.14.002.301/0000[1]
SMT	Standard 3.85	1.5	0.5	1,000,000 (4 N)	J	1.14.002.201/0000[2]
SMT	Low 3.45	3.0	0.6	1,000,000 (4 N)	S	1.14.002.103/0000
SMT	Low 3.45	5.5	0.7	1,000,000 (8 N)	R	1.14.002.113/0000
THT	Standard 3.85	3.0	0.7	1,000,000 (4 N)	O	1.14.002.106/0000
THT	Standard 3.85	4.5	0.8	250,000 (6 N)	Q	1.14.002.006/0000
THT	Standard 3.85	5.5	0.9	1,000,000 (8 N)	N	1.14.002.116/0000
THT	Standard 3.85	8.0	1.1	250,000 (12 N)	P	1.14.002.016/0000

[1] Low noise
[2] Only for use in a redundant system with another SMT keyswitch of standard height

Mounting dimensions

Length	6.4 mm
Width	5.1 mm
Height	See order number table

Mechanical design

Fixing	Soldering
Terminals	SMT L-type terminals, inward, tin-plated (lead-free) or THT
Contact system	Snap-action contact (snap disc)
Contact arrangement	1 normally-open contact
Contact material	Gold (Au)

Mechanical characteristics

Operating force F_1	See order number table
Switching travel S_2	See order number table

Force/travel diagram

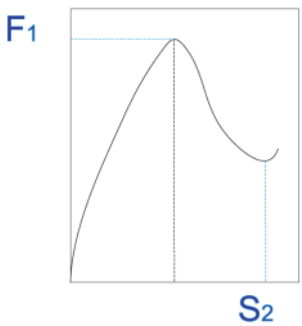

Electrical characteristics

Rated voltage	0.02 - 35 V DC
Rated current	0.01 - 100 mA
Rated power, max.	1 W (ohmic load)
Contact resistance	< 100 mΩ
Bouncing time	< 5 ms
Insulation resistance	10^9 Ω min.
Dielectric strength	250 V AC

Other specifications

Operating temperature	-40°C to +90°C
Storage temperature	-40°C to +90°C
Vibration resistance	5 g acc. to IEC 600 68-2-6
Constant environment	IEC 600 68-2-78 and 2-30
Variable environment	IEC 600 68-2-14 and 2-33
Flammability of materials	UL 94 V1
Operating life	See order number table.

Solder heat resistance / solderability

SMT version	DIN IEC 60068-2-58 and DIN EN 61 760-1
THT version	E DIN IEC 60068-2-20

Standard packaging:

SMT version	Blister reel with 2,100 pcs.
THT version	Tubes with 102 pcs. each

Circuit symbol according to IEC 617

Contact between the two exterior tracks is only ensured in operated condition.

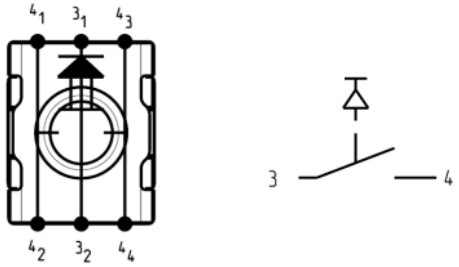

The two exterior tracks must be bridged on the printed circuit board.

Product marking according to (EN ISO 8402) DIN EN ISO 9001

Traceability according to (EN ISO 8402) DIN EN ISO 9001, 2000, 7.5.3
A 7-digit code is printed on the keyswitch, reflecting the production date, the type as well as the shift in which it was produced.

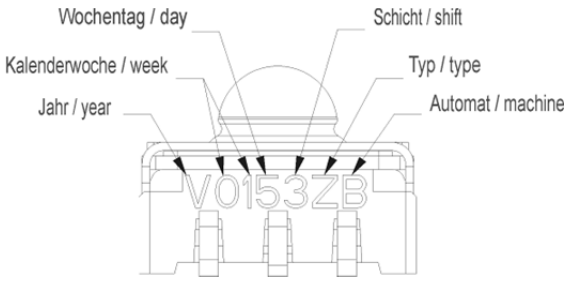

SMT

Dimensional drawing
Standard version

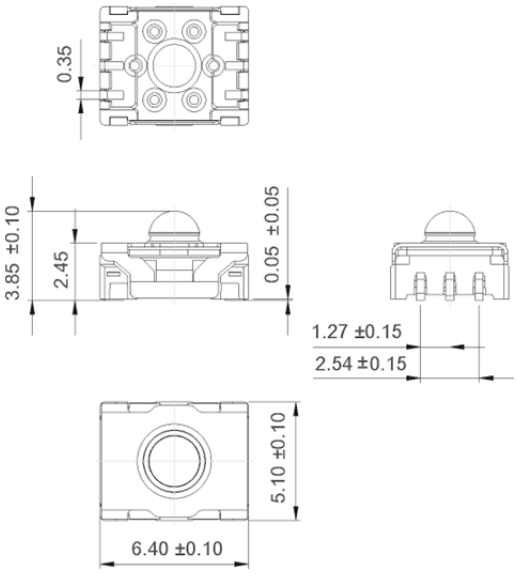

Dimensional drawing
Low version

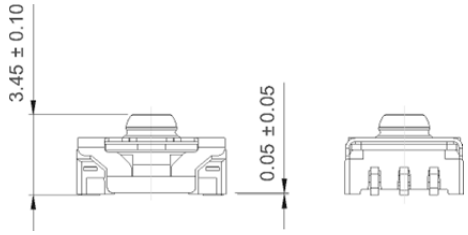

Solder pad:

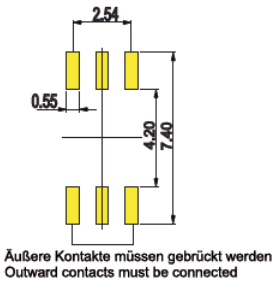

Placement instructions

Nozzle
Special nozzle (Siemens Siplace order no. : 348514-02)
Placement by means of revolver head

Suggestion for stencil printing:
150µm stencil with 10% pad reduction

The two exterior tracks must be bridged on the printed circuit board.

Blister reel:

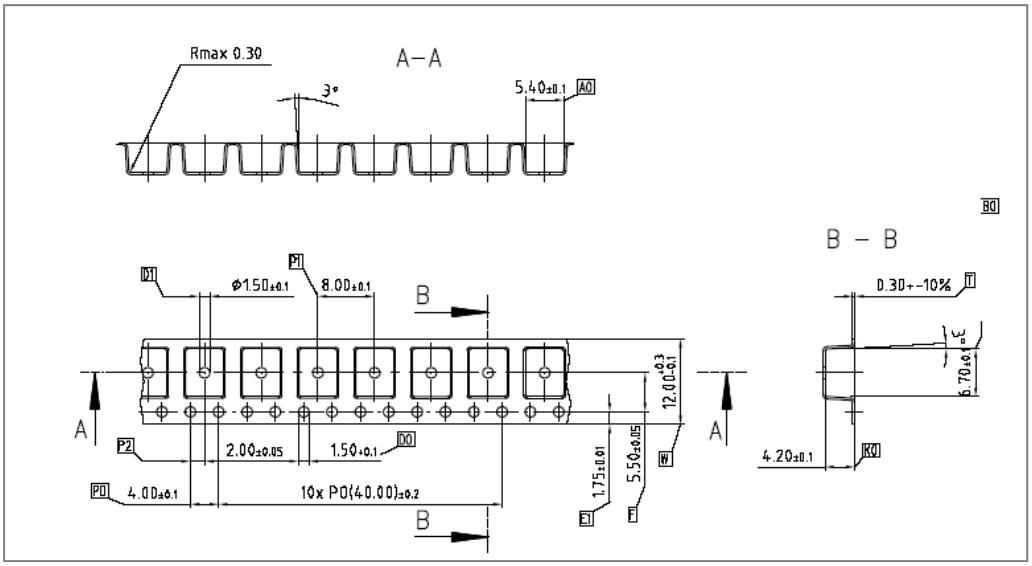

Beginning of blister reel: 54 spaces

THT

Dimensional drawing
Standard version

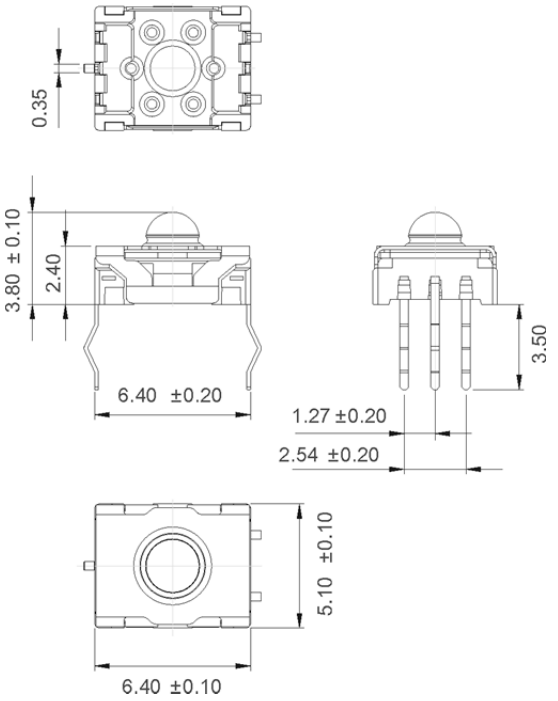

Hole pattern
on PCB

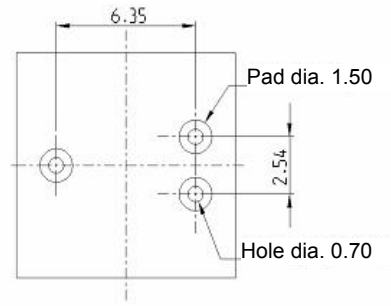

Minimum possible grid (keyswitch arrangement without plungers)

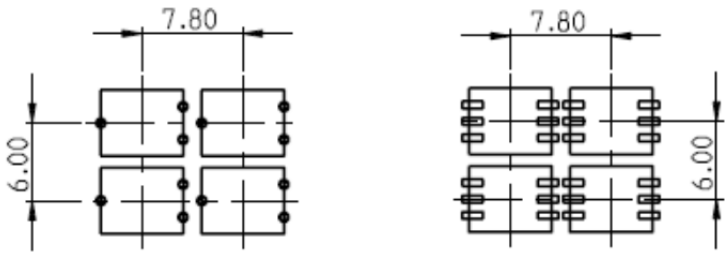

General information

The following range of system accessories is available with the MICON 5 keyswitch:

- Round plunger, opaque, non-illuminable
- Square plunger, illuminable
- Square plunger, spot-illumination
- Round plunger, opaque, ring illumination
- Signal indicator
- RK 90 keycap

The MICON 5 plungers are designed to match the standard keyswitch versions (3.85 mm height), i.e. the specifications in the data sheet are only applicable to the standard versions (THT and SMT).

Mechanical strength	30 N max.

Plungers opaque round,
plungers square,
keycap RK 90

Circle illumination

Plungers square fully and
spot-illuminated,
indicator field (right side)

Round plungers, opaque, non-illuminable

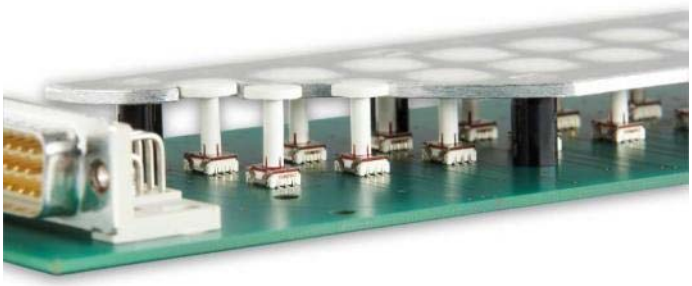

Plunger diameter [mm]	Plunger length L [mm]	Overall height with embossing [mm]	Plunger colour	Order no.
6.0	3.0	5.55	white	5.46.001.103/0200
6.0	3.45	6.0	white	5.46.001.104/0200
6.0	3.95	6.5	white	5.46.001.105/0200
6.0	4.45	7.0	white	5.46.001.106/0200
6.0	7.15	9.7	white	5.46.001.107/0200
6.0	9.95	12.5	white	5.46.001.108/0200
8.0	5.5	8.05	white	5.46.001.121/0200
8.0	10.3	12.85	white	5.46.001.122/0200
8.0	3.0	5.55	white	5.46.001.123/0200
8.0	3.45	6.0	white	5.46.001.124/0200
8.0	3.95	6.5	white	5.46.001.125/0200
8.0	4.45	7.0	white	5.46.001.126/0200
8.0	7.15	9.7	white	5.46.001.127/0200
8.0	9.95	12.5	white	5.46.001.128/0200
11.5	5.5	8.05	white	5.46.001.141/0200
11.5	10.3	12.85	white	5.46.001.142/0200
11.5	3.0	5.55	white	5.46.001.143/0200
11.5	3.45	6.0	white	5.46.001.144/0200
11.5	3.95	6.5	white	5.46.001.145/0200
11.5	4.45	7.0	white	5.46.001.146/0200
11.5	7.15	9.7	white	5.46.001.147/0200
11.5	9.95	12.5	white	5.46.001.148/0200
14.5	3.0	5.55	white	5.46.001.163/0200
14.5	3.45	6.0	white	5.46.001.164/0200
14.5	3.95	6.5	white	5.46.001.165/0200
14.5	4.45	7.0	white	5.46.001.166/0200
14.5	7.15	9.7	white	5.46.001.167/0200
14.5	9.95	12.5	white	5.46.001.168/0200
19.0	3.0	5.55	white	5.46.001.183/0200
19.0	3.45	6.0	white	5.46.001.184/0200
19.0	3.95	6.5	white	5.46.001.185/0200
19.0	4.45	7.0	white	5.46.001.186/0200
19.0	7.15	9.7	white	5.46.001.187/0200
19.0	9.95	12.5	white	5.46.001.188/0200

Typical system design under overlay, round plungers, opaque, non-illuminable

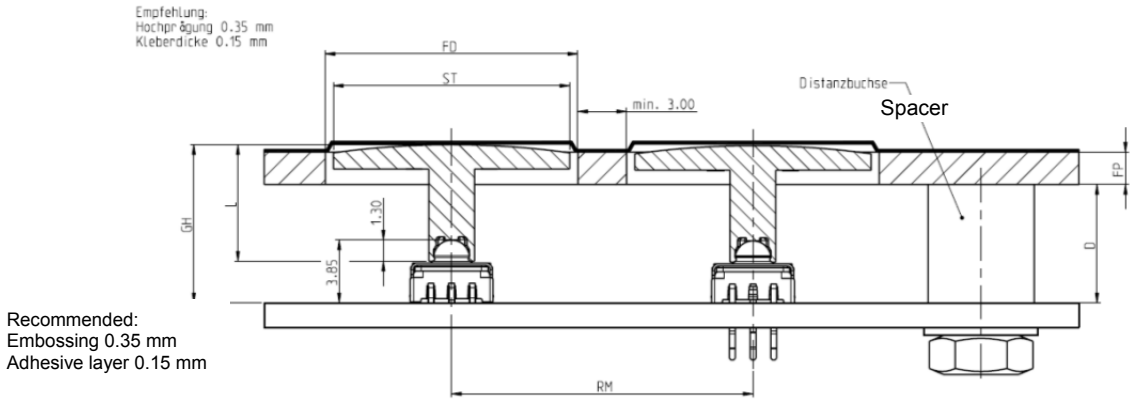

D - Spacer length D = GH - FP - 0.5 (embossing height + adhesive layer)

ST - Plunger diameter

FD - Front panel cut-out FD = ST + 1 mm
FP - Front panel thickness

RM - Grid spacing RM = FD + 3 mm min.

GH - Overall height GH = 3.85 mm + L - 1.3
L - Plunger overall length L

RAFI standard system design, 9.70 mm height, round plunger, opaque, non-illuminable

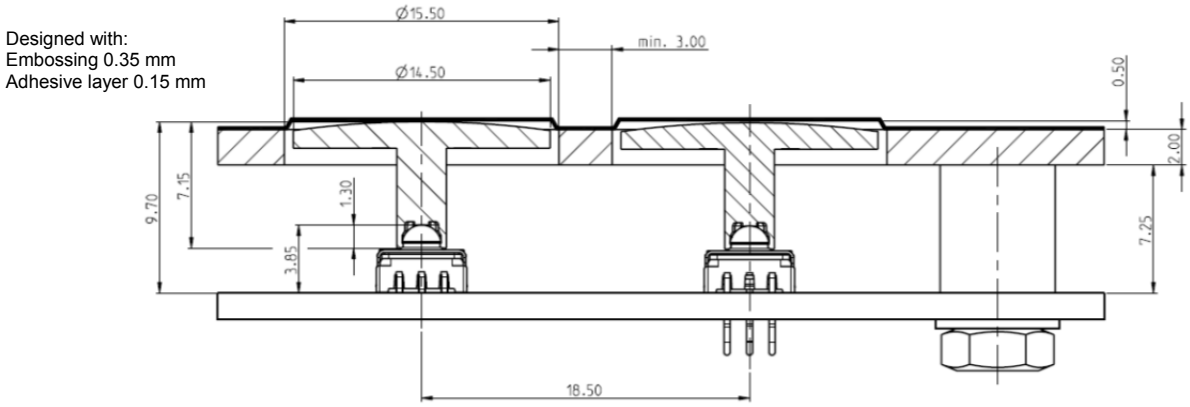

Lowest system design, 5.55 mm height, round plunger, opaque, non-illuminable

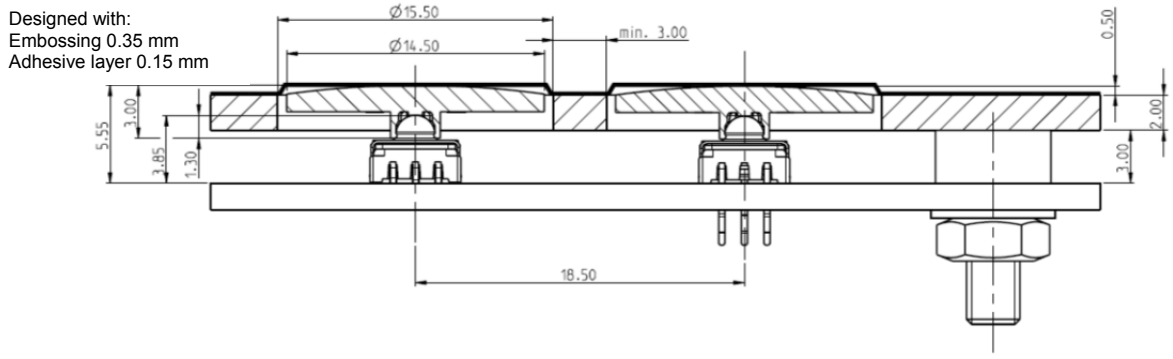

Round plunger, opaque, ring illumination

Overall height GH with embossing [mm]	Ring illumination diameter RA [mm]	Non-illuminated plunger diameter [mm]	Order no.
9.70	20.70	11.50	5.05.511.641/0000
9.70	23.70	14.50	5.05.511.640/0000
9.70	28.20	19.00	5.05.511.639/0000

A MICON system design with ring illumination is only possible with the type height 9.70 mm. We recommend back printing the ring illumination area with a diffusing ink. For the actuating area, back printing with an opaque ink is recommended.

Typical system design with 9.70 mm height, round plunger, opaque, ring illumination

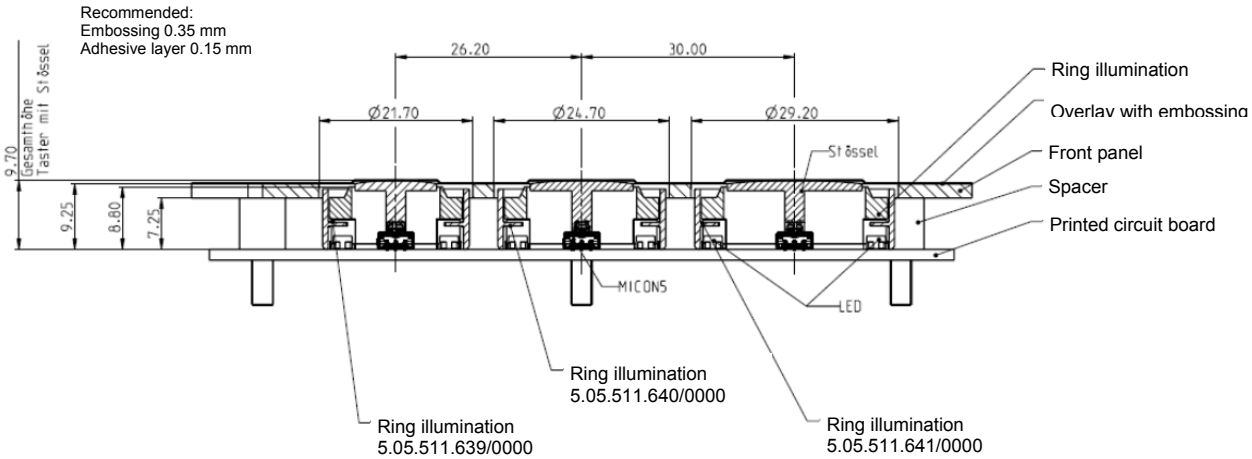

Hole pattern of PCB

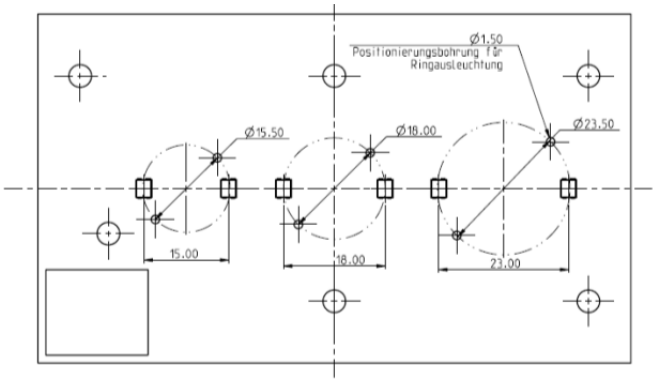

Square plungers, illuminable

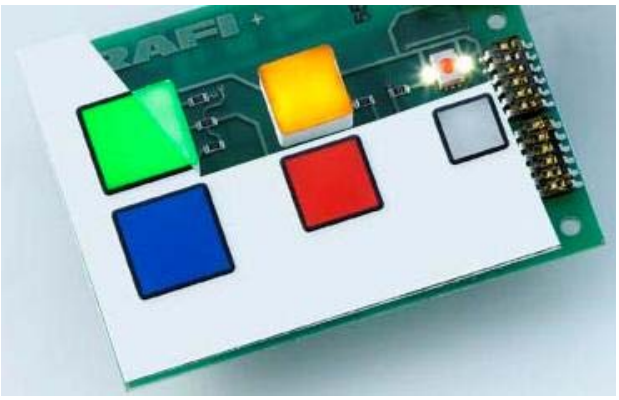

Illuminable plungers 11 x 11 mm

Overall height GH with embossing [mm]	Lens colour	Order no.
9.70	red	5.05.511.470/2300
9.70	green	5.05.511.470/2500
9.70	yellow	5.05.511.470/2400
9.70	white	5.05.511.470/2200
9.70	blue	5.05.511.470/2600
12.5	red	5.05.511.471/2300
12.5	green	5.05.511.471/2500
12.5	yellow	5.05.511.471/2400
12.5	white	5.05.511.471/2200
12.5	blue	5.05.511.471/2600

Illuminable plungers 14.5 x 14.5 mm

Overall height GH with embossing [mm]	Lens colour	Order no.
9.70	red	5.05.511.475/2300
9.70	green	5.05.511.475/2500
9.70	yellow	5.05.511.475/2400
9.70	white	5.05.511.475/2200
9.70	blue	5.05.511.475/2600
12.5	red	5.05.511.476/2300
12.5	green	5.05.511.476/2500
12.5	yellow	5.05.511.476/2400
12.5	white	5.05.511.476/2200
12.5	blue	5.05.511.476/2600

Illuminable plungers 18 x 18 mm

Overall height GH with embossing [mm]	Lens colour	Order no.
9.70	red	5.05.511.480/2300
9.70	green	5.05.511.480/2500
9.70	yellow	5.05.511.480/2400
9.70	white	5.05.511.480/2200
9.70	blue	5.05.511.480/2600
12.5	red	5.05.511.481/2300
12.5	green	5.05.511.481/2500
12.5	yellow	5.05.511.481/2400
12.5	white	5.05.511.481/2200
12.5	blue	5.05.511.481/2600

Typical system design under overlay, square plungers, illuminable

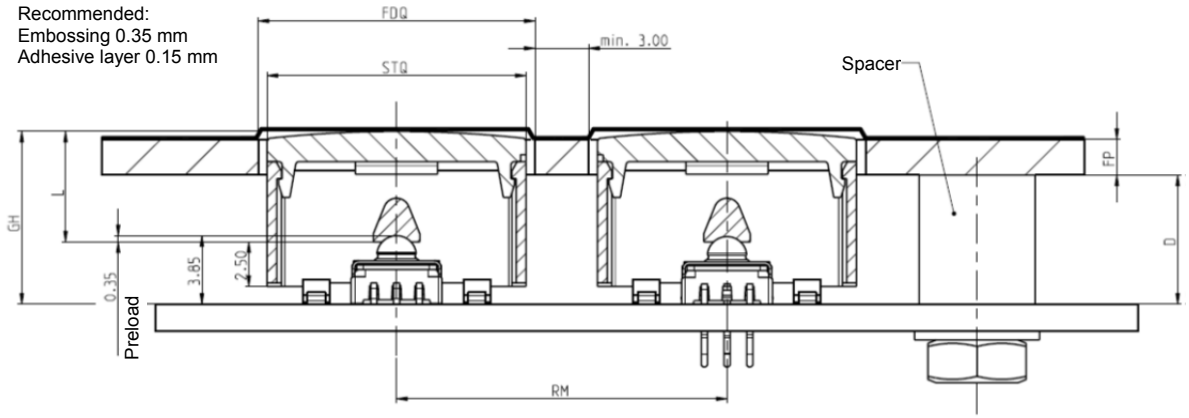

D - Spacer length D = GH - FP - 0.5 (embossing height + adhesive layer)
L - Plunger length

STQ - Width of square plunger

FDQ - Square panel cut-out FDQ = STQ + 1 mm
FP - Front panel thickness

RM - Grid spacing RM = FDQ + 3 mm min.

RAFI standard system design, 9.70 mm height, square plunger, illuminable

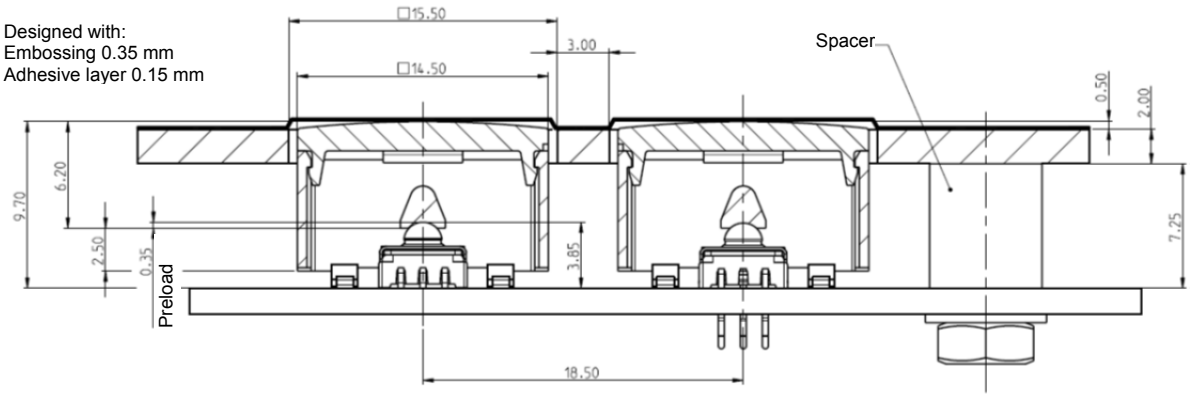

Possible arrangement of LEDs with square plunger, illuminable

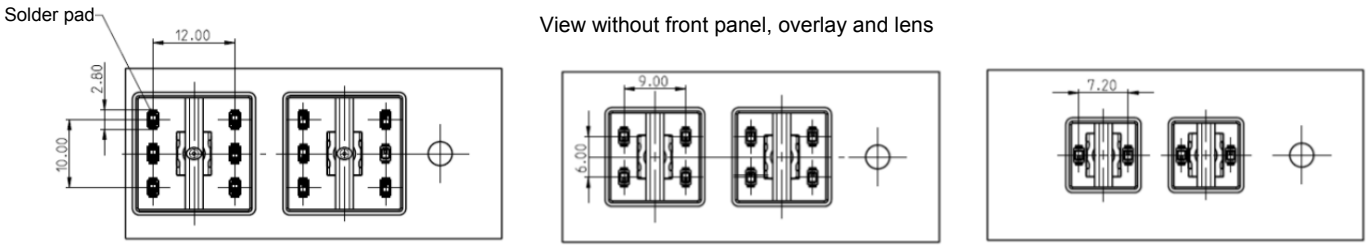

Plunger 18 x 18 mm | Plunger 14.5 x 14.5 mm | Plunger 11 x 11 mm

Redundant system design with illuminable plungers MICON 1.14.002.201, 1.5 N

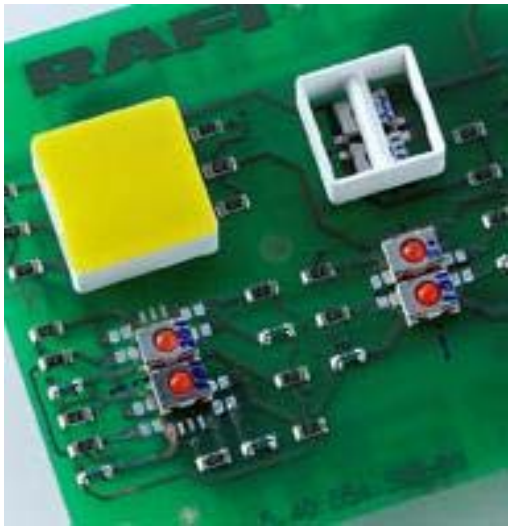

The keyswitch type **1.14.002.201/0000** is designed only for use in a **redundant system** with another SMT keyswitch of standard height. For a redundant system design, the plunger sizes 14.5 x 14.5 mm or 18 x 18 mm must be used.

View without front panel, overlay and lens

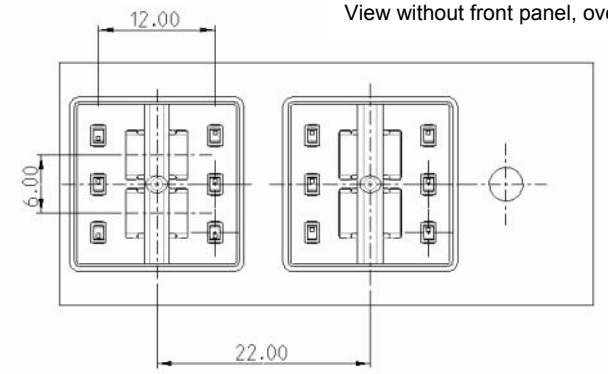

Plunger size 18 x 18 mm

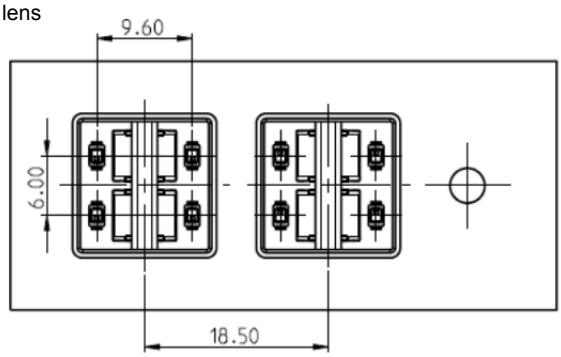

Plunger size 14.5 x 14.5 mm

Square plungers, spot-illumination

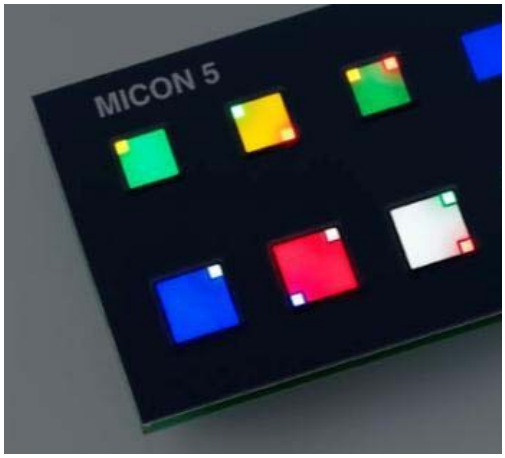

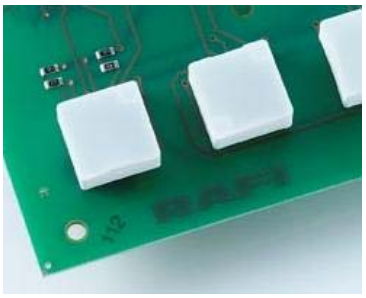

Overall height GH with embossing [mm]	Lens colour	Dimensions [mm]	Spot-illumination	Order no.
9,70	white	14.5 x 14.5		5.05.511.649/2200
9,70	white	14.5 x 14.5		5.05.511.650/2200
9,70	white	14.5 x 14.5		5.05.511.651/2200
9,70	white	18 x 18		5.05.511.658/2200
9,70	white	18 x 18		5.05.511.659/2200
9,70	white	18 x 18		5.05.511.660/2200

RAFI standard system design, 9.70 mm height, square plunger, spot-illumination

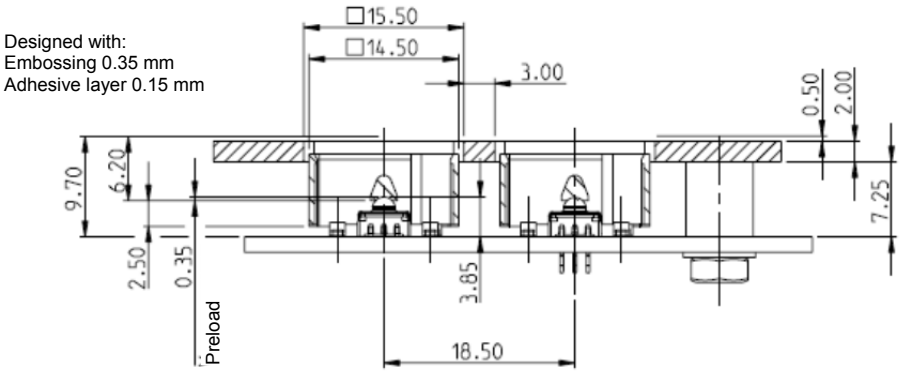

Possible arrangement of LEDs with square plunger, spot illumination

Spot illumination, 14.5 x 14.5

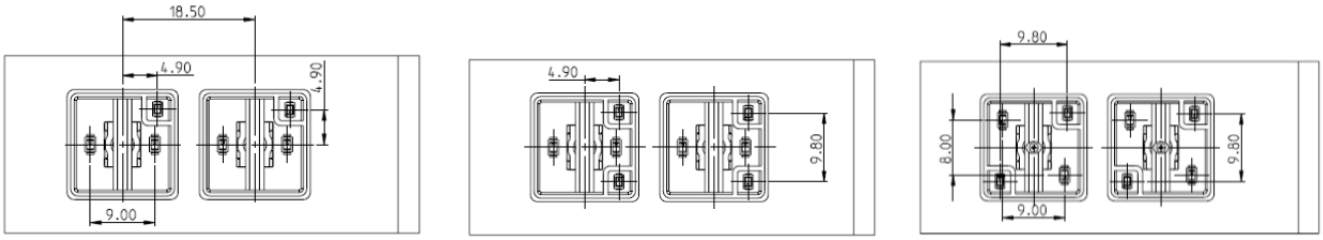

Spot illumination, 18 x 18

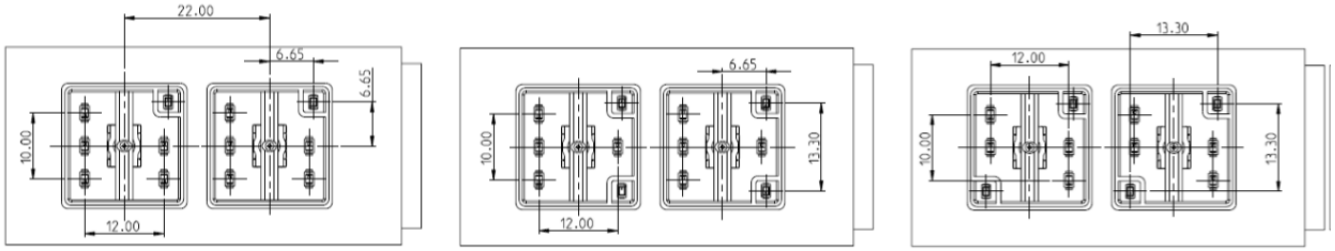

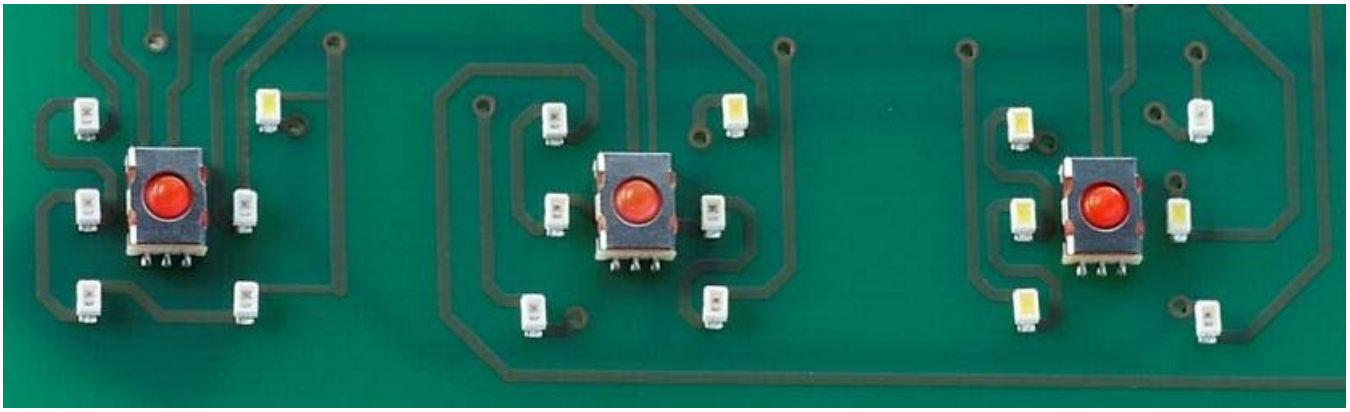

RAFI standard system design, 9.70 mm height, signal indicator

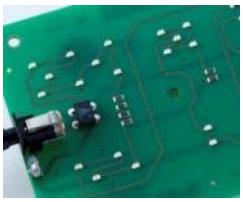

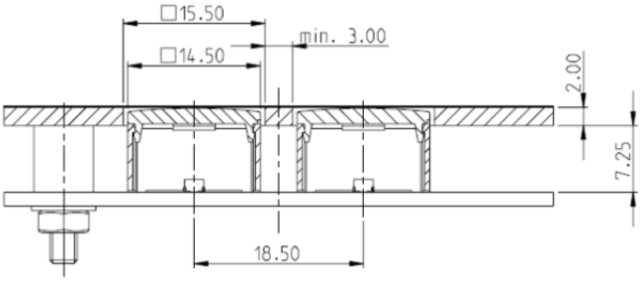

Possible arrangement of LEDs with signal indicator

LED arrangement with signal indicator 11 x 11

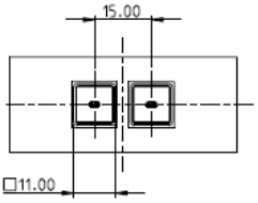

LED arrangement with signal indicator 14.5 x 14.5

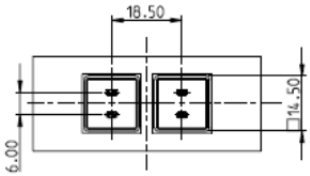

LED arrangement with signal indicator 14.5 x 29

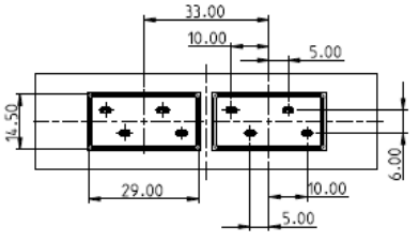

LED arrangement with signal indicator 18 x 18

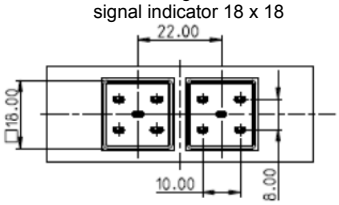

LED arrangement with signal indicator 18 x 36

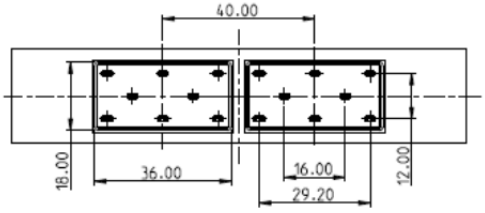

Signal indicator

Overall height GH with embossing [mm]	Lens colour	Dimensions [mm]	Description	Order no.
9.70	white	11 x 11	1-module	5.05.005.182/2200
9.70	white	14.5 x 14.5	1-module	5.05.005.175/2200
9.70	white	18 x 18	1-module	5.05.005.176/2200
9.70	white	14.5 x 29	2-module	5.05.005.177/2200
9.70	white	18 x 36	2-module	5.05.005.178/2200

Other lens colours available on request

Typical system design under keycap, RK 90, 9 x 9 mm

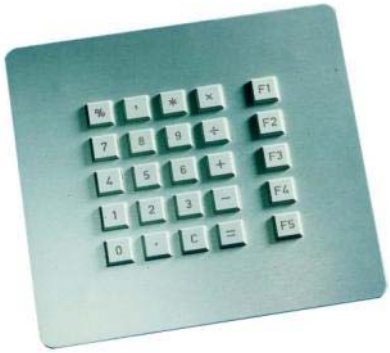

Typical system design degree of protection IP65

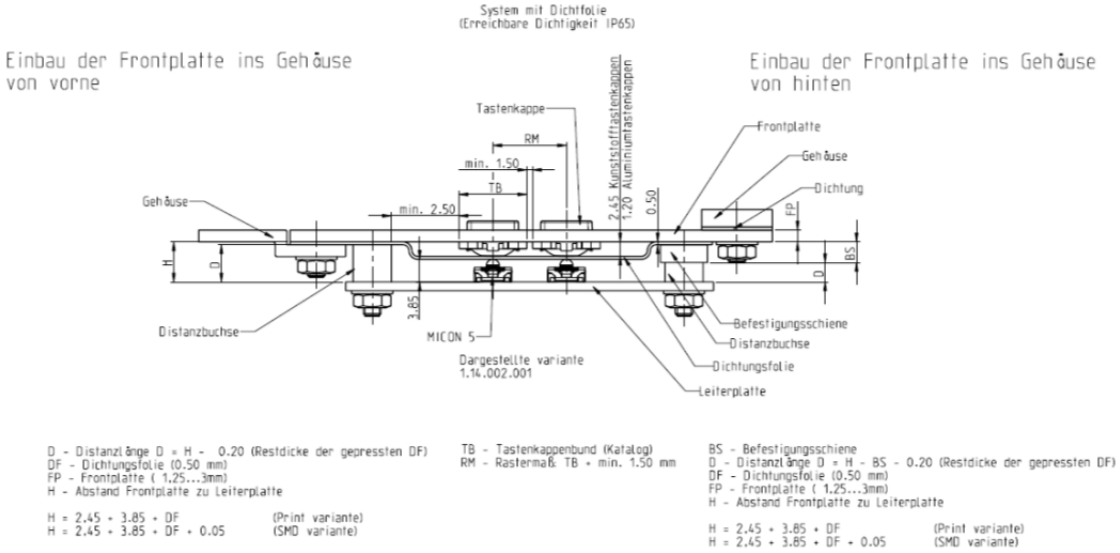
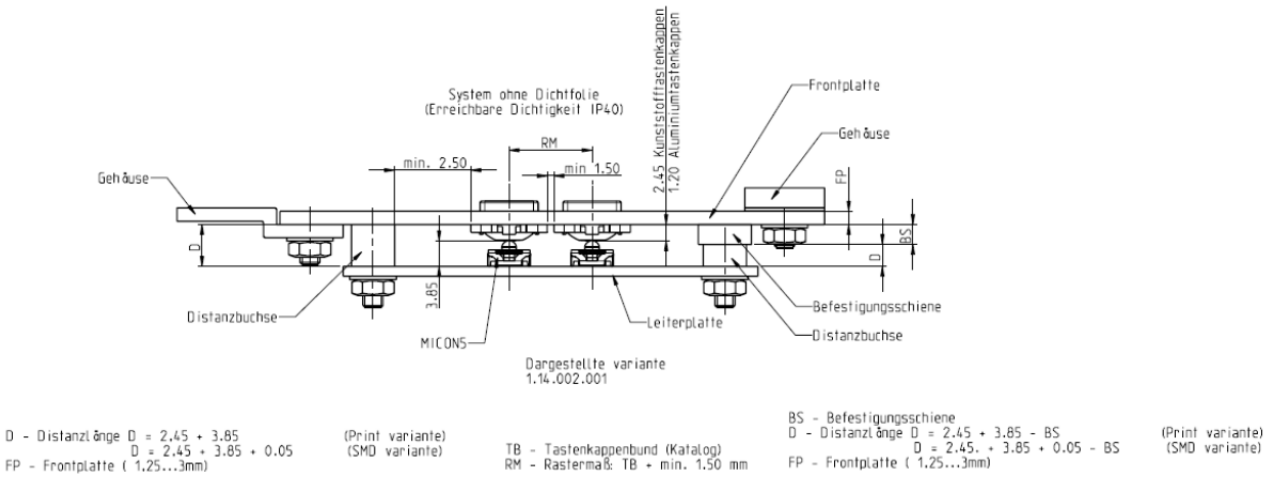
Typical system design under keycap, RK 90, 9 x 9 mm, IP40