EV-T1HPCC-DC500A-5,0M50ECBK11 - DC charging cable

1085658

https://www.phoenixcontact.com/us/products/1085658

Please be informed that the data shown in this PDF document is generated from our online catalog. Please find the complete data in the user documentation. Our general terms of use for downloads are valid.

CHARX connect professional, CCS type 1, HPC DC charging cable, up to 700 A in Boost mode, 500 A permanent, 1000 V DC, with cooled vehicle charging connector and cooled cable, cable: 5 m, black, straight, with charging connector holder, with replaceable mating face frame, without panel feed-through, with digital temperature sensors, Liquid cooling, PHOENIX CONTACT logo, SAE J1772, IEC 62196-3-1, for charging electric vehicles (EV) with direct current (DC)

Product description

DC charging cable with vehicle charging connector and free cable end for fast charging of electric vehicles (EV) with direct current (DC) via CCS type 1 vehicle charging inlets, for installation at charging stations for e-mobility (EVSE)

Your advantages

- Complete product range
- The right charging cable for every application, from the carport to the charging park
- Ultra-fast HPC charging, with temporary power up to 500 kW
- Convenient handling due to the ergonomic design
- Available with your logo on request - for consistent branding of your charging station
- Developed and produced in accordance with the IATF 16949 automotive standard and ISO 9001
- Additional safety thanks to integrated leakage sensors and a wear indicator in the cable sheath
- Convenient communication interfaces via CAN bus and digital output
- Maintenance-friendly replacement of the mating face frame without draining the coolant

Commercial data

Item number	1085658
Packing unit	1 pc
Minimum order quantity	1 pc
Sales key	EM01
Product key	XWBLPI
GTIN	4055626873589
Weight per piece (including packing)	13,000 g
Weight per piece (excluding packing)	11,600 g
Customs tariff number	85444290
Country of origin	PL

Technical data

Product properties

Product type	DC charging cable
Product family	CHARX connect professional
Type	HPC DC charging cable
	with cooled vehicle charging connector and cooled cable
Design	with charging connector holder
	with replaceable mating face frame
	without panel feed-through
	with digital temperature sensors
	Liquid cooling
Charging standard	CCS type 1
Charging mode	DC level 3
Affixed logo	PHOENIX CONTACT logo
Label	8.9 mm x 28.9 mm (customer logo on request)

Electrical properties

Charging power and current (DC charging)

Type of charging current	DC
Charging current	500 A DC
Charging power	500 kW
Rated voltage	1000 V

Charging power and current (DC charging in Boost Mode)

Type of charging current	DC Boost Mode
Charging current	up to 700 A DC
Charging power	up to 700 kW
Rated voltage	1000 V
Note	The specifications refer to charging in Boost Mode and are dependent on ambient conditions. For further details, see the packing slip in the download area.

Charging power and current (DC charging in the event of cooling unit failure)

Charging current	150 A DC
Charging power	150 W
Rated voltage	1000 V
Note	The specifications refer to charging with a defective cooling unit and a short charging process.

Pin assignment (Power contacts)

Number	3 (PE, DC+, DC-)
Rated voltage	1000 V DC
Rated current	500 A

Pin assignment (Signal contacts)

Number	2 (CP, PP)
Rated voltage	30 V AC
Rated current	2 A

Temperature sensors (NTC)

Sensor type	NTC
Attachment point	2 sensors for the replaceable front DC contacts
	2 sensors for the internal DC power wires
	1 sensor on the PCB in the housing
Switch-off temperature	90 °C

Cooling system (Cooling unit)

Cooling	in the vehicle charging connector and in the cable
Coolant	50% water, 50% glycol (Glysofor N)
Cooling hose diameter	1x 11.50 mm Supply hose
	2x 8.80 mm Return hoses
Cooling capacity	600 W (Cable length: 3 m)
	800 W (Cable length: 4 m)
	900 W (Cable length: 5 m)
	1050 W (Cable length: 6 m)
Flow rate	2 l/min
Operating pressure	1.00 bar ... 2.00 bar
Relief pressure	2.00 bar
Maximum permissible pressure	4.00 bar
Flow-in temperature	15 °C

Dimensions

Vehicle charging connector

Width	69.6 mm
Height	192.6 mm
Depth	284.6 mm

Material specifications

Color (Housing)	black (9005)
Color (Handle area)	black (9005)
Color (Mating face)	black (9005)
Color (Cable)	black (9005)
Material (Vehicle charging connector)	Plastic
Material (Cable outer sheath)	EVM-1 in accordance with EN 50620
Material (Contact surface)	Silver
Note	The color appearance and gloss level of the charging cable may vary.
Flammability rating according to UL 94	V0 (Mating face)

Cable/line

Cable length	5 m ±45 mm
Wiring standards/regulations	according to UL 62 (File E515623, Vol 1)
	according to IEC 62893
Cable weight	max. 1938.00 kg/km
Cable type	straight
Cable structure	5 x 25 mm² + 7 x 0,75 mm² + 2 x 13 mm²
External cable diameter	35.70 mm ±0.4 mm
Outer sheath, material	TPE-U in accordance with IEC 62893-1
Stripping length of the sheath	250 mm ±5 mm
Stripping length	250 mm ±5 mm
Cable resistance	≤ 0.00078 Ω/m (based on a power core, at an ambient temperature of 20°C)
Bending radius	min. 357 mm (10x Ø)

Mechanical properties

Coolant	50% water, 50% glycol (Glysofor N)

Mechanical data

Insertion/withdrawal cycles	> 10000 (based on IEC 62196-1)
Insertion force	< 75 N
Withdrawal force	< 75 N

Environmental and real-life conditions

Ambient conditions

Degree of protection (Vehicle charging connector)	IP54 / Type 3R (The degree of protection is only ensured in the ready and plugged-in state when both plug-in components are original products from Phoenix Contact or suitable standard-compliant products.)
Ambient temperature (operation)	-30 °C ... 40 °C
	max. 55 °C (Current reduction required, observe the DC contact temperature limit value of 90°C)
Ambient temperature (storage/transport)	-40 °C ... 80 °C
Altitude	5000 m (above sea level)

Standards and regulations

Standards

Standards/regulations	SAE J1772
	IEC 62196-3-1

Drawings

Dimensional drawing

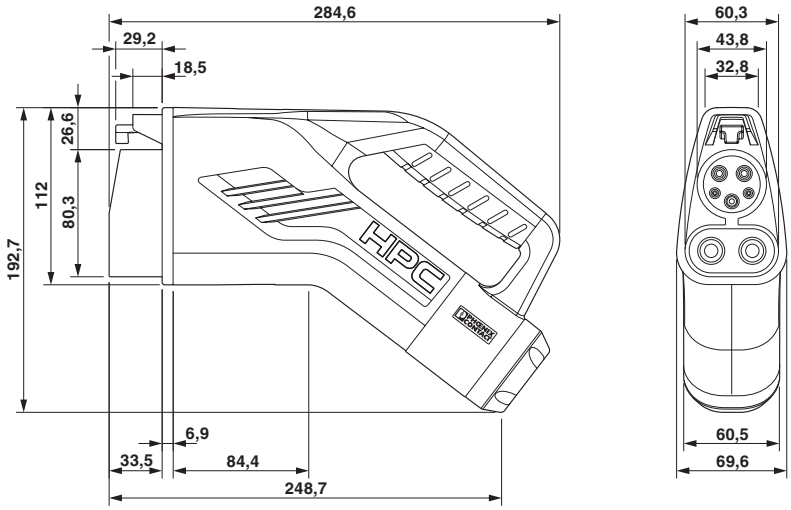

Make sure that the vehicle charging connector is placed in an appropriate charging connector holder, which ensures a minimum protection rating of IP24 in accordance with IEC 61851-1, for the entire time between charging. To create this charging connector holder, use the dimensions of the vehicle charging connector. Detailed dimensions can also be found in the Download area.

Schematic diagram

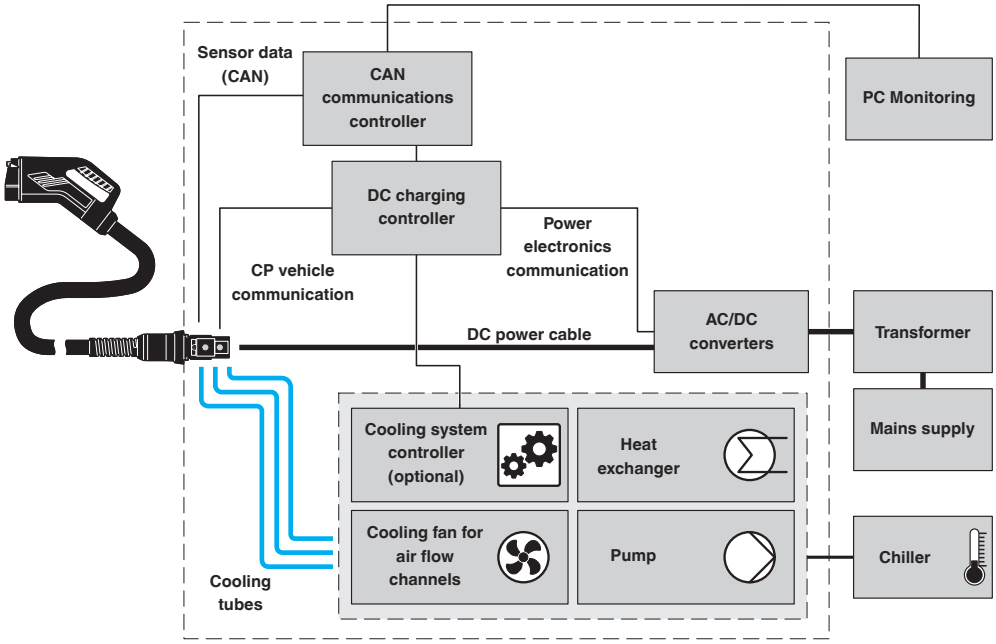

Central system: cooling unit and controller are positioned externally and supply multiple charging stations, each of which is equipped with a heat exchanger. The cooling is done actively using a chiller.

Schematic diagram

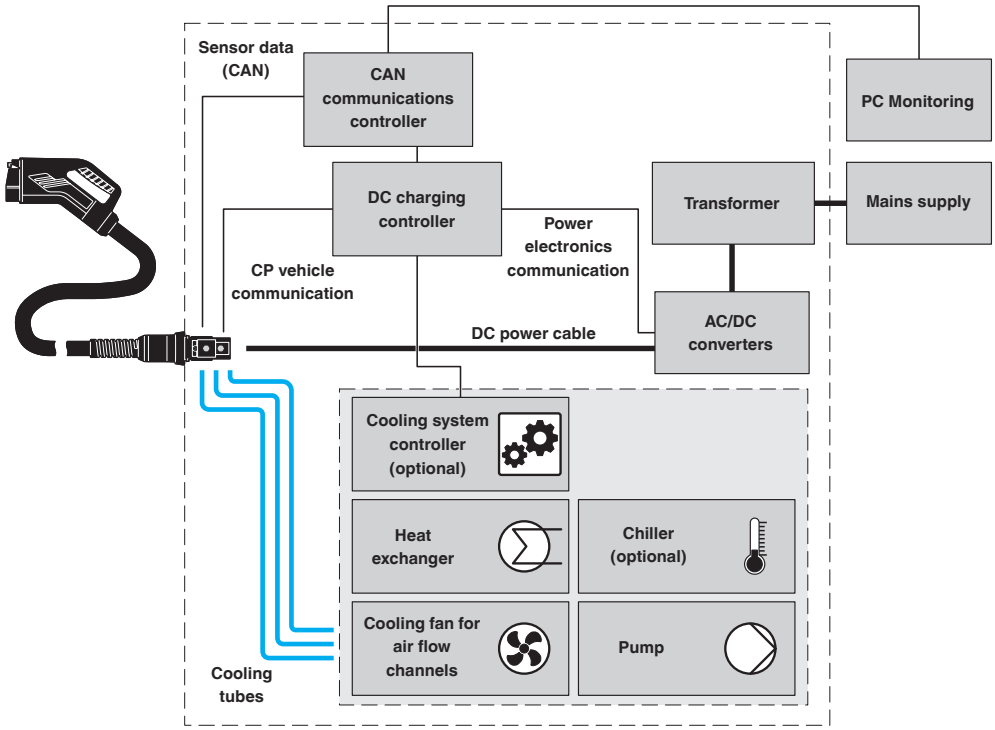

Standalone, decentralized system: cooling unit and controller are integrated into the charging station. The choice of cooling unit can be passive or active (i.e., with or without chiller).

Schematic diagram

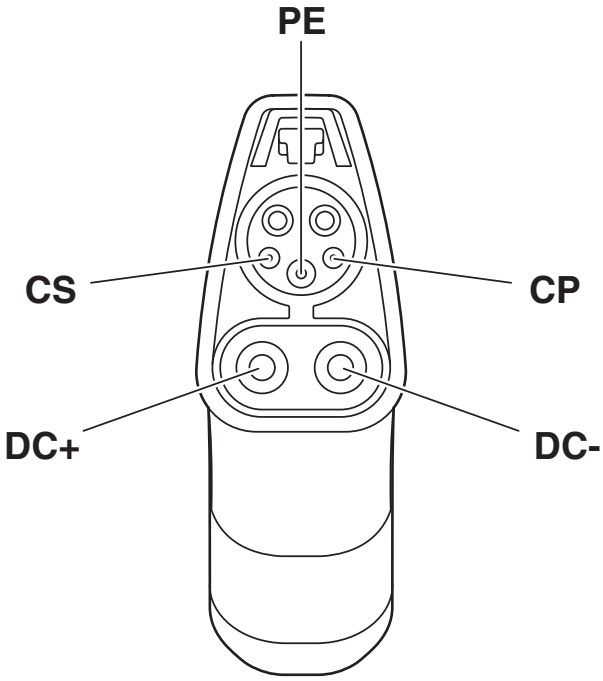

Pin assignment of the Vehicle Connector

Schematic diagram

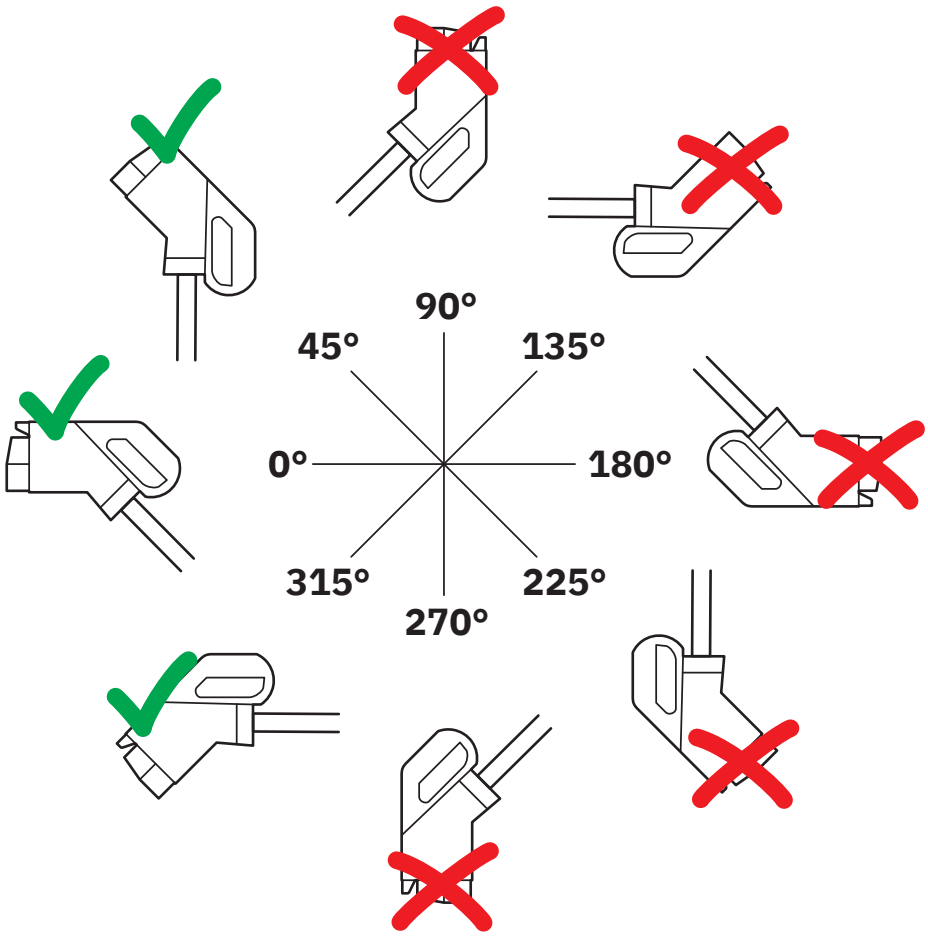

The resting position must be installed in the charging station such that the user cannot hang up the vehicle connector upside down (90° to 270°). However, positions rotated upward (45°) or downward (315°) are options for a resting position.

Schematic diagram

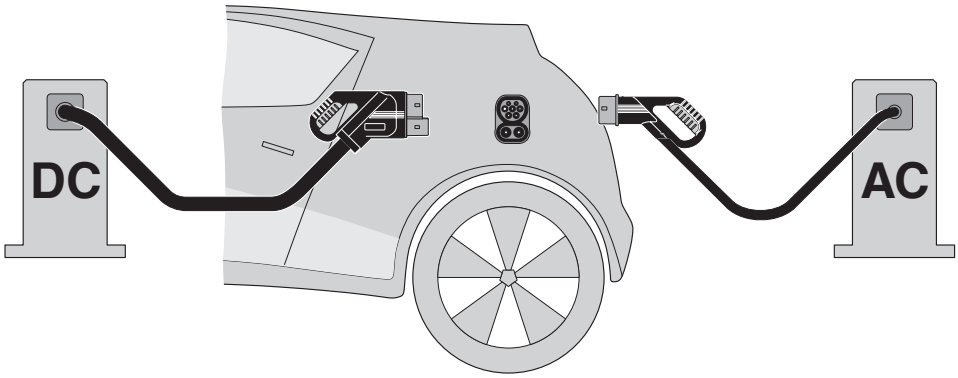

The Combined Charging System (CCS) principle - standard-compliant charging system for electric vehicles, which supports both conventional AC charging and fast DC charging. Both Vehicle Connectors fit into the CCS Vehicle Inlet.

Schematic diagram

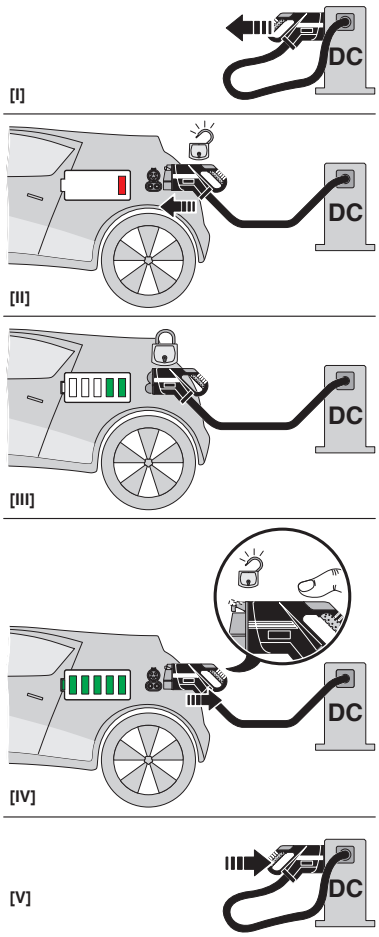

Operating instructions

Schematic diagram

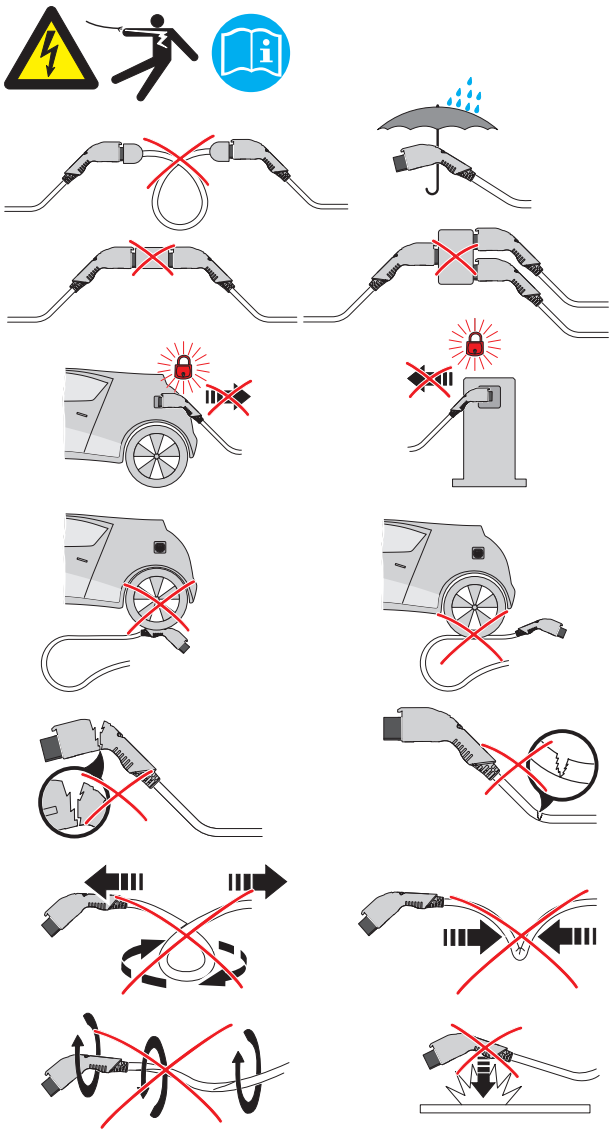

Warning signal note

Approvals

To download certificates, visit the product detail page: https://www.phoenixcontact.com/us/products/1085658

cULus Recognized
Approval ID: E473195-20220201

	Nominal voltage U_N	Nominal current I_N	Cross section AWG	Cross section mm^2
keine				
	1000 V	500 A	-	-

Classifications

ECLASS

ECLASS-13.0	27144705
ECLASS-15.0	27144705

ETIM

ETIM 10.0	EC002897

UNSPSC

UNSPSC 21.0	39121500

Environmental product compliance

EU RoHS

Fulfills EU RoHS substance requirements	Yes
Exemption	6(c), 7(c)-I

China RoHS

Environment friendly use period (EFUP)	EFUP-50
	An article-related China RoHS declaration table can be found in the download area for the respective article under "Manufacturer declaration". For all articles with EFUP-E, no China RoHS declaration table issued and required.

EU REACH SVHC

REACH candidate substance (CAS No.)	Lead(CAS: 7439-92-1)
SCIP	24c3ca22-7cb5-41b8-8abf-d7a044629388

EF3.1 Climate Change

CO2e kg	101.2 kg CO2e

Phoenix Contact 2026 © - all rights reserved
https://www.phoenixcontact.com

Phoenix Contact USA
586 Fulling Mill Road
Middletown, PA 17057, United States
(+717) 944-1300
info@phoenixcon.com