© 2016 AFCI

Amphenol FCi

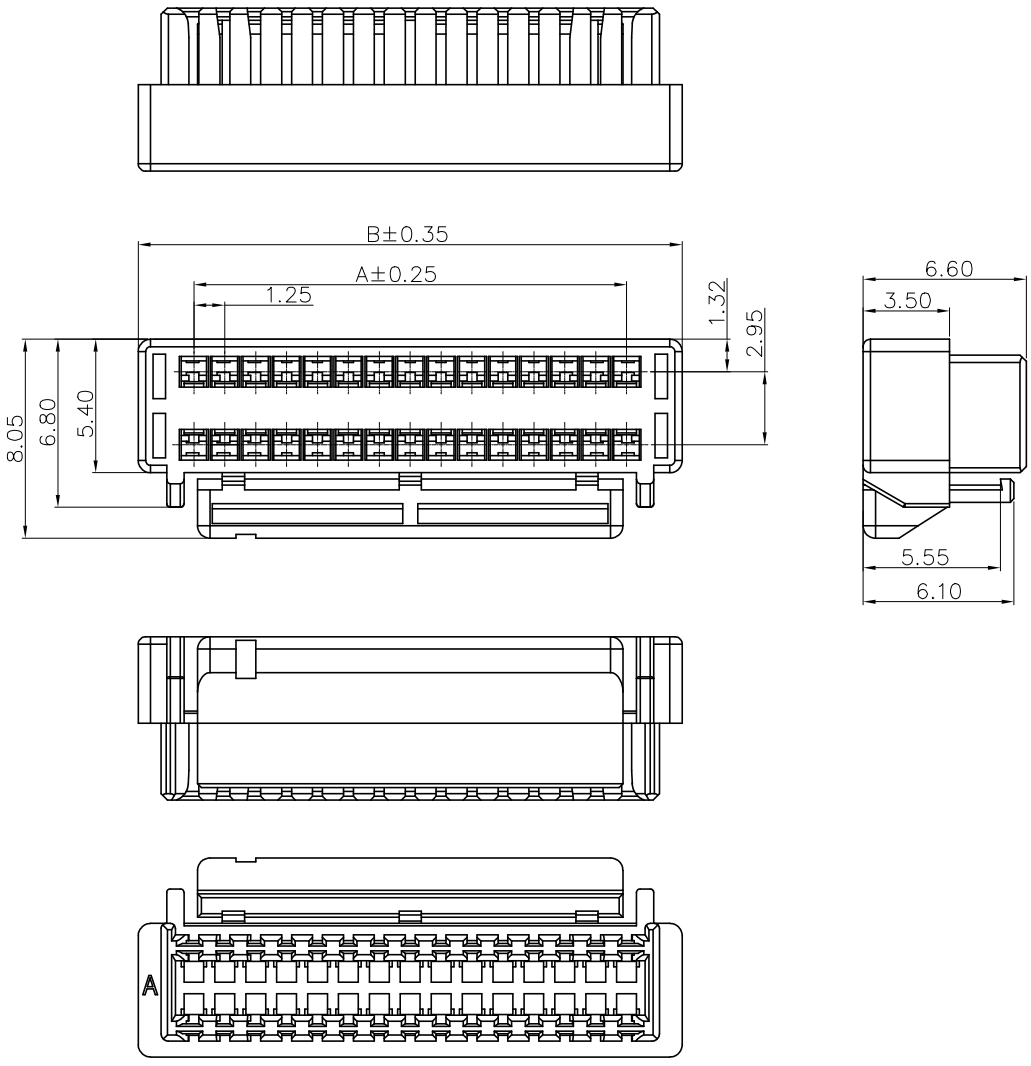

NOTE:

1. MATERIAL: PA66, UL94V-0
1. TEMPERATURE RANGE: -25°C~+85°C
2. MATE WITH AFCI 10169363 OR 10169364
3. USE WITH AFCI 10169366 CRIMP TERMINAL
4. PRODUCT SPEC: GS-12-1811
5. ORDERING CODE: 10169365-XX 0 X LF

NUMBER OF PINS
10~40: 10~40PINS

PACKAGE & HOUSING COLOR
1: BAG, NATURAL
2: BAG, BLACK

Poles	Dimension(mm) A	Dimension(mm) B	Poles	Dimension(mm) A	Dimension(mm) B
2*05	5.00	9.50	2*13	15.00	19.50
2*06	6.25	10.75	2*14	16.25	20.75
2*07	7.50	12.00	2*15	17.50	22.00
2*08	8.75	13.25	2*16	18.75	23.25
2*09	10.00	14.50	2*17	20.00	24.50
2*10	11.25	15.75	2*18	21.25	25.75
2*11	12.50	17.00	2*19	22.50	27.00
2*12	13.75	18.25	2*20	23.75	28.25

mat'l. code	surface ISO 1302	tolerance ISO 406/ISO 1101	projection
ltr / ecn no / dr / date	tolerances unless otherwise specified		mm
A / New Release / JH / 2023/12/19	angles 0°±2°	linear .0±.5 / .00±.25 / .000±.010	scale 1:1
	dr	Jeffrey.Huang	-
	engr	Jeffrey.Huang	-
	chr	TIM YAO	-
	appd	TIM YAO	-
sheet index	revision	A	
	sheet	1	

product family: FitMate

title: 1.25mm DR RECEPTACLE

dwg no: 10169365 — sheet1 of 1 — size: A4

type: Product Customer Drawing

Amphenol FCi