© 2016 AFCI

Amphenol FCi

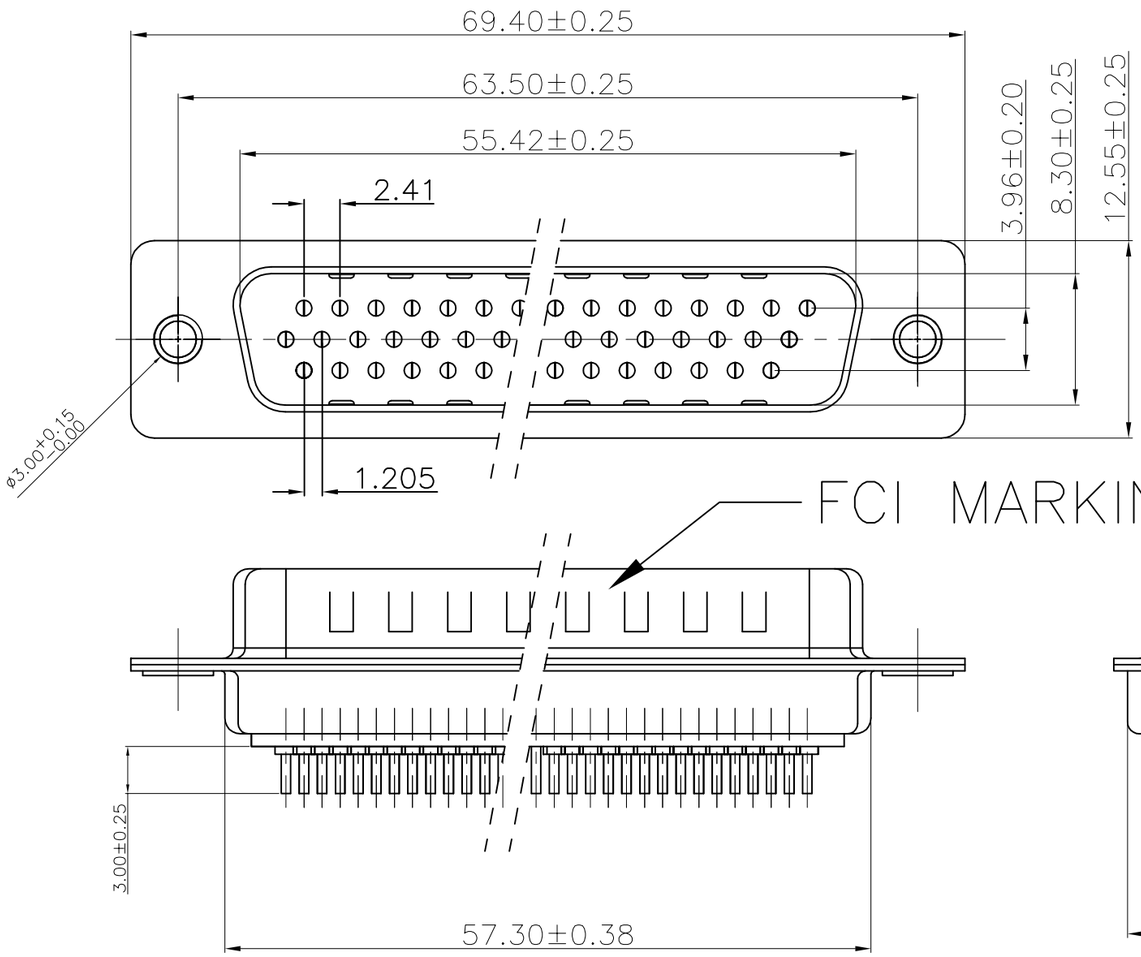

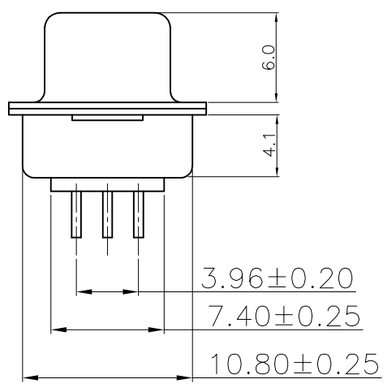

TECHNICAL SPECIFICATIONS

CONTACTS MATERIAL	:	COPPER ALLOY
INSULATOR MATERIAL	:	SELF EXTINGUISHING THERMOPLASTIC– TO UL CLASS 94 V0
OPERATING TEMPERATURE	:	–55°C +105°C
OPERATING CURRENT	:	3 A PER CONTACT
CONTACT RESISTANCE	:	⩽30m Ω
INSULATION RESISTANCE	:	⩾1000 M Ω
MAXIMUM VOLTAGE	:	1000 V.r.m.s

| | | |

© 2016 AFCI

Amphenol FCi

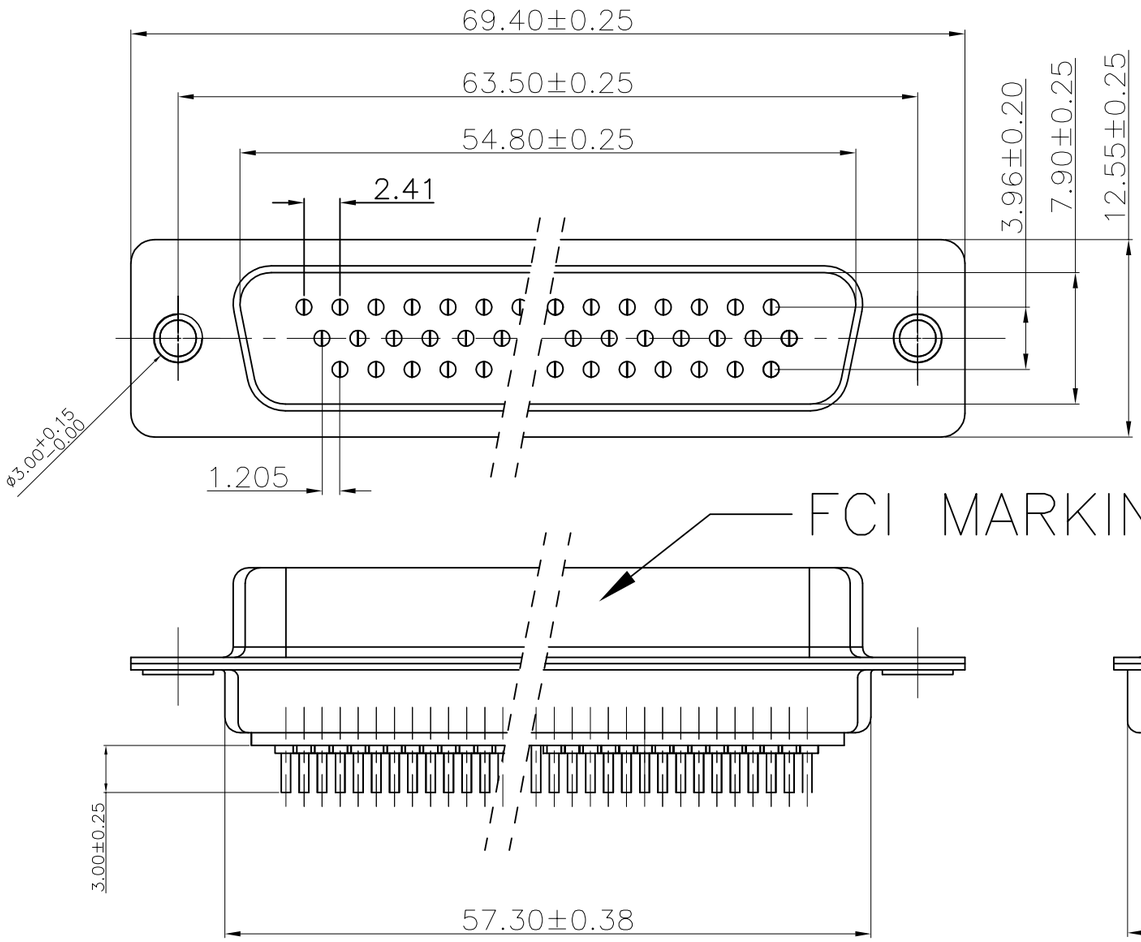

TECHNICAL SPECIFICATIONS

CONTACTS MATERIAL	:	COPPER ALLOY
INSULATOR MATERIAL	:	SELF EXTINGUISHING THERMOPLASTIC– TO UL CLASS 94 V0
OPERATING TEMPERATURE	:	–55°C +105°C
OPERATING CURRENT	:	3 A PER CONTACT
CONTACT RESISTANCE	:	⩽30m Ω
INSULATION RESISTANCE	:	⩾1000 M Ω
MAXIMUM VOLTAGE	:	1000 V.r.m.s

| | | |

© 2016 AFCI

Amphenol FCi

ORDERING INFORMATION

10148985–X 62 P 4 X X LF

- STRAIGHT SERIES
- OPTION ACCESSORY MOUNTING
  BLANK – NO ACCESSORY
- No. OF CONTACT
  62
- CONTACT TYPE
  P – PIN
  S – SOCKET
- CONTACT PLATING
  4 – Au FLASH
- DIMPLES
  X – ON MALE CONNECTORS ONLY
- OPTION PCB MOUNTING
  BLANK – NIL
- LEAD FREE

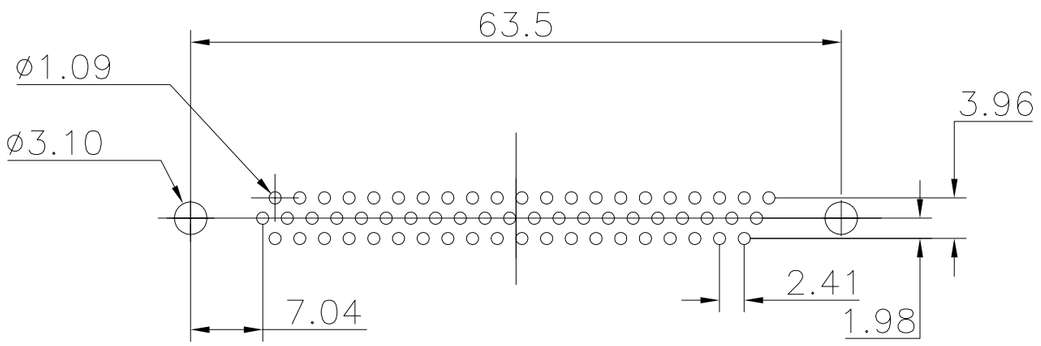

P.C.B LAYOUT(FOR 62P)

mat'l. code				surface ISO 1302	tolerance ISO 406 ISO 1101	projection	product family D–SUB
ltr	ecn no	dr	date	tolerances unless otherwise specified			title
A		GM	2019--11-05	angles	linear .0±.0.25	mm	D–SUB STRAIGHT SPILL HIGH DENSITY 62 POSITION
					.00±.0.20		
				0°±3°	.000±.0.15	scaleN.T.S.	
				dr	GREGAR MATHEW 2019--11-05	Amphenol FCi	dwg no 10148985 sheet 3 of 3 size A4
				engr	MITHUN PAUL 2019--11-05		
				chr	GREGAR MATHEW 2019--11-05		
				appd	BIJU K PAUL 2019--11-05		type Product Customer Drawing
sheet index	revision	A					
	sheet	3					

form: A4mmXLc-2016-02-24