Amphenol®

ACA-B and GT Series

Reverse Bayonet Coupling Connectors

For further information on your individual application requirements, contact:
Amphenol Corporation
Amphenol Industrial Operations
191 Delaware Avenue
Sidney, New York 13838-1395
Phone: 888-364-9011 Fax: 520-397-7169
View and download or print Amphenol catalogs on-line at: www.amphenol-industrial.com

Amphenol Industrial is a Certified ISO 9001 Manufacturer

Table of Contents **Page**

Amphenol® ACA-B Reverse Bayonet Coupling Connectors
General Description - 1
ACA-B Connector Classes - 2
ACA 3101F-B inline receptacle - 3
ACA 3101E-B inline receptacle - 4
ACA 3101G-B inline receptacle - 5
ACA 3101R-B inline receptacle - 6
ACA 3102E-B box mount receptacle for front panel mounting - 7
ACA 3103F-B wall mount receptacle for rear panel mounting - 8
ACA 3103E-B wall mount receptacle for rear panel mounting - 9
ACA 3103G-B wall mount receptacle for rear panel mounting - 10
ACA 3103R-B wall mount receptacle for rear panel mounting - 11
ACA 3106F-B straight plug - 12
ACA 3106E-B straight plug - 13
ACA 3106G-B straight plug - 14
ACA 3106R-B straight plug - 15
ACA 3107A-B jam nut receptacle - 16
ACA 3108F-B 90 degree angle plug - 17
ACA 3108E-B 90 degree anlge plug - 18
ACA-B Connectors How to Order - 78

Amphenol® GT Series Reverse Bayonet Coupling Connectors
General Description - 19
GT Connector Classes - 20
GT01A inline receptacle - 21
GT01AF/01F inline receptacle - 22
GT01G inline receptacle - 23
GT01R inline receptacle - 24
GT01RV inline receptacle - 25
GT02R box mount receptacle for front panel mounting - 26
GT030 square flange receptacle for rear panel mounting - 27
GT030A square flange receptacle for rear panel mounting - 28
GT030AF/030F square flange receptacle for rear panel mounting - 29
GT030G square flange receptacle for rear panel mounting - 30
GT030R square flange receptacle for rear panel mounting - 31
GT030RV square flange receptacle for rear panel mounting - 32
GT06A straight plug - 33
GT06AF/06F straight plug - 34
GT06CF straight plug - 35
GT06G straight plug - 36
GT06AMI/GT06RMI - 37
GT06R straight plug - 38
GT06RV straight plug - 39
GT06SB straight plug - 40
GT07R jam nut receptacle - 41
GT070 jam nut receptacle - 42
GT08A 90° angle plug - 43
GT08AF/08F 90° angle plug - 44
GT08R 90° angle plug - 45
GT05 dummy receptacle - 46
GTTB thru-bulkhead receptacles - 47
GT Connectors How to Order - 79

Amphenol ACA-B/GT Reverse Bayonet Insert Arrangements
Insert availability - 48-50
Insert alternate positioning - 51
Solder contacts - 52
Crimp contacts - 53
RADSOK® technology and crimp socket contacts - 54
Contact arrangements - 55-77

Amphenol ACA-B/GT Reverse Bayonet Accessories
10-40450, 10-36675, 10-580649 sealing gaskets - 80
Receptacle protection caps - 81
Plug protection caps - 82
Rear mounting data - receptacles, sealing plugs, sealing ranges - 83
MS3057-A cable clamp - 84
MS3420 bushing - 85
MS3057-C style (10-350349) cable clamp - 86
Glands - 87
GT Amphe-Power Connectors with RADSOK® Technology,
Amphe-Power™ Amphe-GTR, Power GT - 88
Special Application GT Connectors:
GTC-M Series with metal clips, GT-PC Connectors for high voltage power applications,
GT Connectors for the HMI Lighting industry - 89
Additional Amphenol Industrial Products for the Rail Industry - 90, 91

Amphenol® ACA-B Connectors
with reverse bayonet coupling

Features of the Amphenol® ACA-B Reverse Bayonet Coupling Connectors with SAE AS50151 insert patterns:

- Quick positive coupling
- Audible and tactile indication of full coupling
- Waterproof - IP67 rated
- No lockwiring required
- High shock and vibration capabilites
- Inserts available in Neoprene
- Available in both crimp and solder terminations
- Contacts available in gold and silver plating
- Numerous finishes available
- Zinc alloy plating (cadmium free) available
- Rugged construction
- Intermateable with existing VG95234 connectors
- 500 couplings minimum
- Up to 50% more ampacity with the use of RADSOK® socket contacts. Consult Amphenol Industrial Operations for more information or see Amphenol® Amphe-Power Connectors with RADSOK® Technology, SL-391 (online at www.amphenol-industrial.com).
- Operating temperature range: -55°c to 125°c

RoHS Compliant Product Available – Consult Amphenol Industrial Operations.

RoHS
2011/65/EU

The ACA-B is designed for commercial and Industrial environments requiring a rugged bayonet style connector for heavy duty power and signal applications.

A comprehensive selection of insert arrangements and accessory hardware configurations are featured to accommodate heavy-duty, commercial wire and cable.

ACA-B is manufactured in accordance with SAE AS50151 and VG95234. The insulators are made of high quality polychloroprene material and can withstand temperatures of -55 to +125 degrees C. The rugged shell is made from aluminum alloy and plated with a variety of finishes to meet any application. Contacts are machined from copper alloy or brass and can be plated with gold or silver.

Common applications include automation, machine tool, robotics, instrumentation, process control, material handling, and test and measurement.

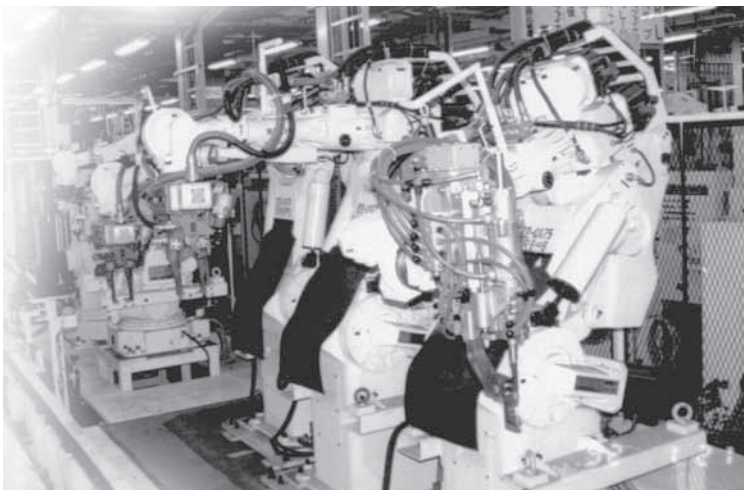

ACA-B Connector Classes

ACA 3101F-B

inline receptacle

- **Receptacle with solid backshell and rear accessory threads**
- **Includes grommet and grommet sleeve**

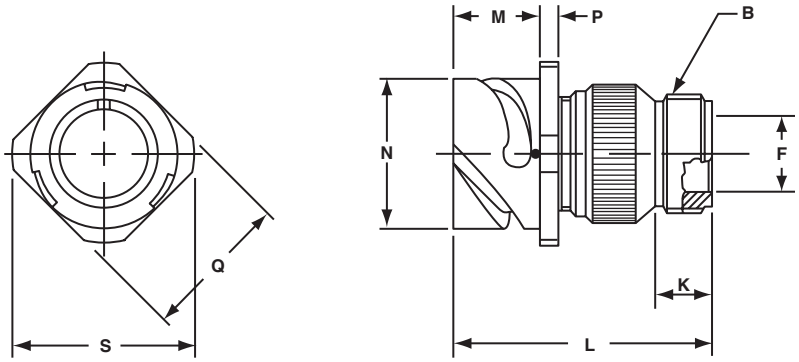

Inches

Shell Size	B Thread Class 2A	F Min.	K Min.	L Max.	M + .016 – .000	N + .000 – .006	P ± .008	Q ± .008	S Max.
10SL	.6250-24 UNEF	.409	.374	1.969	.717	.717	.110	.811	.992
14S	.7500-20 UNEF	.520	.374	1.969	.717	.969	.126	1.000	1.173
16S	.8750-20 UNEF	.638	.374	1.969	.717	1.079	.126	1.126	1.272
16	.8750-20 UNEF	.638	.374	2.362	.846	1.079	.126	1.126	1.272
18	1.0000-20 UNEF	.756	.374	2.362	.907	1.213	.157	1.248	1.370
20	1.1875-18 UNEF	.867	.374	2.362	.907	1.346	.157	1.374	1.488
22	1.1875-18 UNEF	.965	.374	2.362	.907	1.472	.157	1.500	1.618
24	1.4375-18 UNEF	1.094	.374	2.560	.907	1.610	.157	1.626	1.756
28	1.4375-18 UNEF	1.228	.374	2.560	.947	1.839	.157	1.874	2.004
32	1.7500-18 UNS	1.488	.433	2.560	.947	2.102	.157	2.126	2.248
36	2.0000-18 UNS	1.780	.465	3.150	.947	2.346	.157	2.386	2.504

Millimeters

Shell Size	F Min.	K Min.	L Max.	M + 0.4 – 0.0	N + 0.00 – 0.15	P ± 0.2	Q ± 0.2	S Max.
10SL	10.4	9.5	50	18.2	18.2	2.8	20.6	25.2
14S	13.2	9.5	50	18.2	24.6	3.2	25.4	29.8
16S	16.2	9.5	50	18.2	27.4	3.2	28.6	32.3
16	16.2	9.5	60	21.5	27.4	3.2	28.6	32.3
18	19.2	9.5	60	23.0	30.8	4.0	31.7	34.8
20	22.0	9.5	60	23.0	34.2	4.0	34.9	37.8
22	24.5	9.5	60	23.0	37.4	4.0	38.1	41.1
24	27.8	9.5	65	23.0	40.9	4.0	41.3	44.6
28	31.2	9.5	65	24.1	46.7	4.0	47.6	50.9
32	37.8	11.0	65	24.1	53.4	4.0	54.0	57.1
36	45.2	11.8	80	24.1	59.6	4.0	60.6	63.6

All dimensions for reference only.

ACA 3101E-B

inline receptacle

- **Receptacle with cable clamp and telescopic bushing**
- **Includes grommet and grommet sleeve**

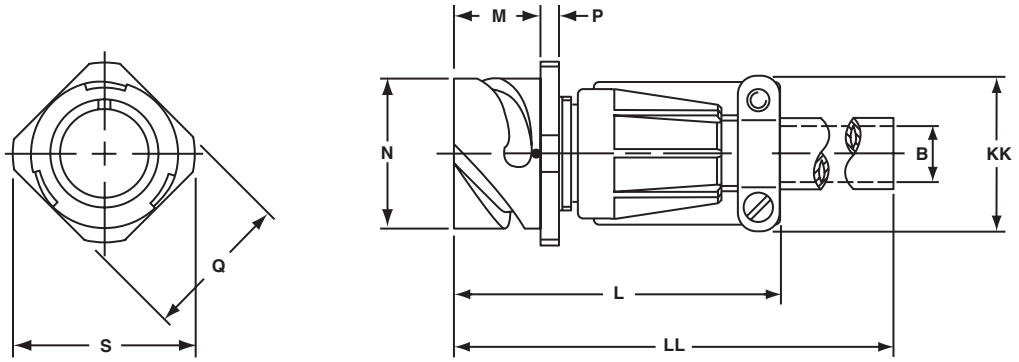

Inches

Shell Size	B Max.	L Max.	M + .016 – .000	N + .000 – .006	P ± .008	Q Max.	S Max.	KK Max.	LL Max.
10SL	.256	2.362	.717	.717	.110	.886	.992	.894	4.720
14S	.354	2.440	.717	.969	.126	1.161	1.173	1.083	4.720
16S	.433	2.756	.717	1.079	.126	1.240	1.272	1.181	4.720
16	.433	2.756	.846	1.079	.126	1.240	1.272	1.181	4.921
18	.559	3.031	.907	1.213	.157	1.358	1.370	1.300	4.921
20	.622	3.031	.907	1.346	.157	1.476	1.488	1.476	4.921
22	.622	3.031	.907	1.472	.157	1.594	1.618	1.476	4.921
24	.843	3.346	.907	1.610	.157	1.752	1.756	1.705	4.921
28	.843	3.346	.947	1.839	.157	1.969	2.004	1.705	4.921
32	1.051	3.346	.947	2.102	.157	2.224	2.248	2.035	4.921
36	1.248	4.134	.947	2.346	.157	2.480	2.504	2.283	5.315

Millimeters

Shell Size	B Max.	L Max.	M + 0.4 – 0.0	N + 0.00 – 0.15	P ± 0.2	Q Max.	S Max.	KK Max.	LL Max.
10SL	6.5	60	18.2	18.2	2.8	22.5	25.2	22.7	120
14S	9.0	62	18.2	24.6	3.2	29.5	29.8	27.5	120
16S	11.0	70	18.2	27.4	3.2	31.5	32.3	30.0	120
16	11.0	70	21.5	27.4	3.2	31.5	32.3	30.0	125
18	14.2	77	23.0	30.8	4.0	34.5	34.8	33.0	125
20	15.8	77	23.0	34.2	4.0	37.5	37.8	37.5	125
22	15.8	77	23.0	37.4	4.0	40.5	41.1	37.5	125
24	21.4	85	23.0	40.9	4.0	44.5	44.6	43.3	125
28	21.4	85	24.1	46.7	4.0	50.0	50.9	43.3	125
32	26.7	85	24.1	53.4	4.0	56.5	57.1	51.7	125
36	31.7	105	24.1	59.6	4.0	63.0	63.6	58.0	135

All dimensions for reference only.

ACA 3101G-B

inline receptacle

- **Receptacle with backshell for heat shrink termination**
- **Does not include grommet and grommet sleeve**

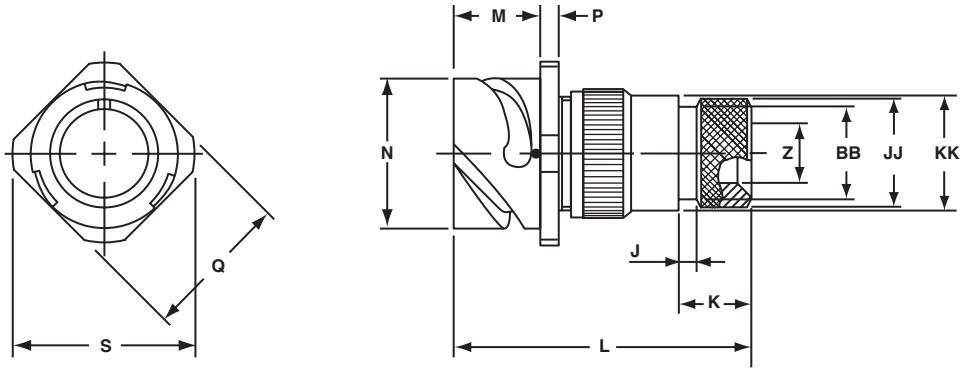

Inches

Shell Size	J ± .008	K ± .020	L Max.	M + .016 − .000	N + .000 − .006	P ± .008	Q Max.	S Max.	Z Min.	BB Max.	JJ ± .008	KK ± .008
10SL	.138	.461	1.969	.717	.717	.110	.886	.992	.303	.524	.610	.669
14S	.138	.461	1.969	.717	.969	.126	1.161	1.173	.417	.669	.752	.791
16S	.138	.461	1.969	.717	1.079	.126	1.240	1.272	.531	.862	.941	.925
16	.138	.453	2.362	.846	1.079	.126	1.240	1.272	.531	.862	.941	.925
18	.138	.453	2.362	.907	1.213	.157	1.358	1.370	.575	.862	.941	1.043
20	.138	.500	2.559	.907	1.346	.157	1.476	1.488	.736	1.031	1.165	1.189
22	.138	.500	2.559	.907	1.472	.157	1.594	1.618	.819	1.031	1.165	1.323
24	.138	.500	2.559	.907	1.610	.157	1.752	1.756	.969	1.358	1.488	1.421
28	.138	.500	2.559	.947	1.839	.157	1.969	2.004	1.062	1.358	1.488	1.630
32	.138	.598	2.756	.947	2.102	.157	2.224	2.248	1.311	1.717	1.882	1.913
36	.138	.598	3.150	.947	2.346	.157	2.480	2.504	1.516	1.717	1.882	2.157

Millimeters

Shell Size	J ± 0.2	K ± 0.5	L Max.	M + 0.4 − 0.0	N + 0.00 − 0.15	P ± 0.2	Q Max.	S Max.	Z Min.	BB Max.	JJ ± 0.2	KK ± 0.2
10SL	3.5	11.7	50	18.2	18.2	2.8	22.5	25.2	7.7	13.3	15.5	17.0
14S	3.5	11.7	50	18.2	24.6	3.2	29.5	29.8	10.6	17.0	19.1	20.1
16S	3.5	11.7	50	18.2	27.4	3.2	31.5	32.3	13.5	21.9	23.9	23.5
16	3.5	11.5	60	21.5	27.4	3.2	31.5	32.3	13.5	21.9	23.9	23.5
18	3.5	11.5	60	23.0	30.8	4.0	34.5	34.8	14.6	21.9	23.9	26.5
20	3.5	12.7	65	23.0	34.2	4.0	37.5	37.8	18.7	26.2	29.6	30.2
22	3.5	12.7	65	23.0	37.4	4.0	40.5	41.1	20.8	26.2	29.6	33.6
24	3.5	12.7	65	23.0	40.9	4.0	44.5	44.6	24.6	34.5	37.8	36.1
28	3.5	12.7	65	24.1	46.7	4.0	50.0	50.9	27.0	34.5	37.8	41.4
32	3.5	15.2	70	24.1	53.4	4.0	56.5	57.1	33.3	43.6	47.8	48.6
36	3.5	15.2	80	24.1	59.6	4.0	63.0	63.6	38.5	43.6	47.8	54.8

All dimensions for reference only.

ACA 3101R-B

inline receptacle

- **Receptacle with short endbell for individual wire sealing**
- **Includes grommet and grommet sleeve**

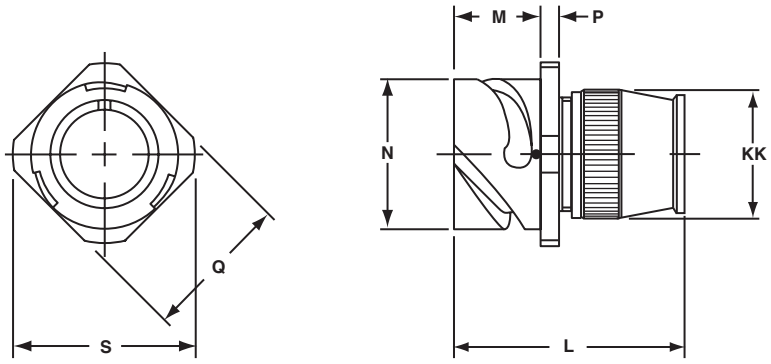

Inches

Shell Size	L Max.	M + .016 – .000	N + .000 – .006	P ± .008	Q Max.	S Max.	KK Max.
10SL	1.890	.717	.717	.110	.886	.992	.787
14S	1.890	.717	.969	.126	1.161	1.173	.945
16S	1.890	.717	1.079	.126	1.240	1.272	1.024
16	2.205	.846	1.079	.126	1.240	1.272	1.024
18	2.244	.907	1.213	.157	1.358	1.370	1.161
20	2.244	.907	1.346	.157	1.476	1.488	1.299
22	2.244	.907	1.472	.157	1.594	1.618	1.417
24	2.244	.907	1.610	.157	1.752	1.756	1.575
28	2.244	.947	1.839	.157	1.969	2.004	1.811
32	2.362	.947	2.102	.157	2.224	2.248	2.028
36	2.362	.947	2.346	.157	2.480	2.504	2.283

Millimeters

Shell Size	L Max.	M + 0.4 – 0.0	N + 0.00 – 0.15	P ± 0.2	Q Max.	S Max.	KK Max.
10SL	48.0	18.2	18.2	2.8	22.5	25.2	20.0
14S	48.0	18.2	24.6	3.2	29.5	29.8	24.0
16S	48.0	18.2	27.4	3.2	31.5	32.3	26.0
16	56.0	21.5	27.4	3.2	31.5	32.3	26.0
18	57.0	23.0	30.8	4.0	34.5	34.8	29.5
20	57.0	23.0	34.2	4.0	37.5	37.8	33.0
22	57.0	23.0	37.4	4.0	40.5	41.1	36.0
24	57.0	23.0	40.9	4.0	44.5	44.6	40.0
28	57.0	24.1	46.7	4.0	50.0	50.9	46.0
32	60.0	24.1	53.4	4.0	56.5	57.1	51.5
36	60.0	24.1	59.6	4.0	63.0	63.6	58.0

All dimensions for reference only.

ACA 3102E-B

box mount receptacle for front panel mounting

- **Receptacle without threads for panel mounting**
- **Four through mounting holes or optional metric threaded holes**

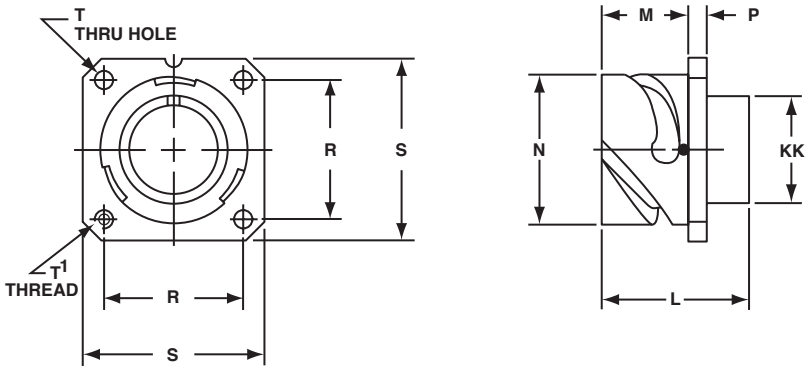

Inches

Shell Size	L ± .012	M + .016 − .000	N + .000 − .006	P ± .008	R ± .004	S ± .012	T Thru Hole + .004 − .000	KK Max.
10SL	1.087	.717	.717	.110	.717	1.000	.126	.626
14S	1.087	.717	.969	.126	.906	1.181	.126	.756
16S	1.087	.717	1.079	.126	.969	1.280	.126	.882
16	1.331	.846	1.079	.126	.969	1.280	.126	.882
18	1.331	.907	1.213	.157	1.063	1.378	.126	1.008
20	1.331	.907	1.346	.157	1.157	1.496	.126	1.142
22	1.331	.907	1.472	.157	1.252	1.614	.126	1.268
24	1.331	.907	1.610	.157	1.374	1.752	.146	1.390
28	1.406	.947	1.839	.157	1.563	2.000	.146	1.630
32	1.469	.947	2.102	.157	1.752	2.244	.169	1.882
36	1.469	.947	2.346	.157	1.937	2.500	.169	2.063

Millimeters

Shell Size	L ± 0.3	M + 0.4 − 0.0	N + 0.00 − 0.15	P ± 0.2	R ± 0.1	S ± 0.3	T Thru Hole + 0.1 − 0.0	T1 Metric Thread	KK Max.
10SL	27.6	18.2	18.2	2.8	18.2	25.4	3.2	M4	15.9
14S	27.6	18.2	24.6	3.2	23.0	30.0	3.2	M4	19.2
16S	27.6	18.2	27.4	3.2	24.6	32.5	3.2	M4	22.4
16	33.8	21.5	27.4	3.2	24.6	32.5	3.2	M4	22.4
18	33.8	23.0	30.8	4.0	27.0	35.0	3.2	M4	25.6
20	33.8	23.0	34.2	4.0	29.4	38.0	3.2	M4	29.0
22	33.8	23.0	37.4	4.0	31.8	41.0	3.2	M4	32.2
24	33.8	23.0	40.9	4.0	34.9	44.5	3.7	M4	35.3
28	35.7	24.1	46.7	4.0	39.7	50.8	3.7	M5	41.4
32	37.3	24.1	53.4	4.0	44.5	57.0	4.3	M5	47.8
36	37.3	24.1	59.6	4.0	49.2	63.5	4.3	M5	52.4

All dimensions for reference only.

ACA 3103F-B

wall mounting receptacle for rear panel mounting

- **Receptacle with backshell and rear accessory threads**
- **Includes wire sealing grommet and grommet sleeve for individual wires**
- **Four through mounting holes or optional metric threaded holes**

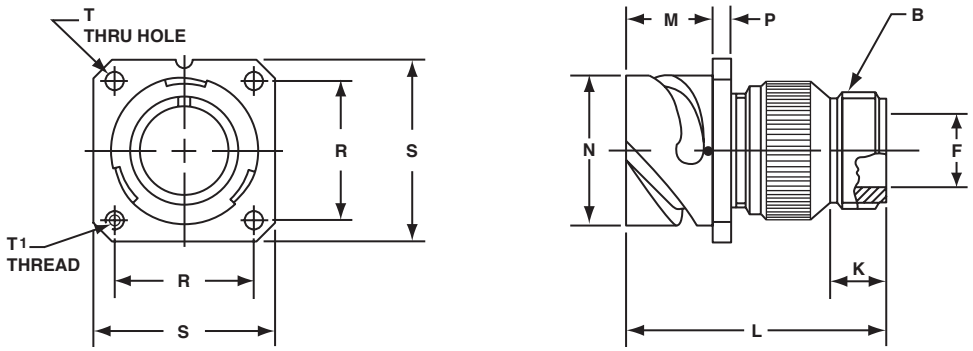

Inches

Shell Size	B Thread Class 2A	F Min.	K Min.	L Max.	M + .016 − .000	N + .000 − .006	P ± .008	R ± .004	S ± .012	T Thru Hole + .004 − .000
10SL	.6250-24 UNEF	.409	.374	1.969	.717	.717	.110	.717	1.000	.126
14S	.7500-20 UNEF	.520	.374	1.969	.717	.969	.126	.906	1.181	.126
16S	.8750-20 UNEF	.638	.374	1.969	.717	1.079	.126	.969	1.280	.126
16	.8750-20 UNEF	.638	.374	2.362	.846	1.079	.126	.969	1.280	.126
18	1.0000-20 UNEF	.756	.374	2.362	.907	1.213	.157	1.063	1.378	.126
20	1.1875-18 UNEF	.867	.374	2.362	.907	1.346	.157	1.157	1.496	.126
22	1.1875-18 UNEF	.965	.374	2.362	.907	1.472	.157	1.252	1.614	.126
24	1.4375-18 UNEF	1.094	.374	2.560	.907	1.610	.157	1.374	1.752	.146
28	1.4375-18 UNEF	1.228	.374	2.560	.947	1.839	.157	1.563	2.000	.146
32	1.7500-18 UNS	1.488	.433	2.560	.947	2.102	.157	1.752	2.244	.169
36	2.0000-18 UNS	1.780	.465	3.150	.947	2.346	.157	1.937	2.500	.169

Millimeters

Shell Size	F Min.	K Min.	L Max.	M + 0.4 − 0.0	N + 0.00 − 0.15	P ± 0.2	R ± 0.1	S ± 0.3	T Thru Hole + 0.1 − 0.0	T[1] Metric Thread
10SL	10.4	9.5	50	18.2	18.2	2.8	18.2	25.4	3.2	M4
14S	13.2	9.5	50	18.2	24.6	3.2	23.0	30.0	3.2	M4
16S	16.2	9.5	50	18.2	27.4	3.2	24.6	32.5	3.2	M4
16	16.2	9.5	60	21.5	27.4	3.2	24.6	32.5	3.2	M4
18	19.2	9.5	60	23.0	30.8	4.0	27.0	35.0	3.2	M4
20	22.0	9.5	60	23.0	34.2	4.0	29.4	38.0	3.2	M4
22	24.5	9.5	60	23.0	37.4	4.0	31.8	41.0	3.2	M4
24	27.8	9.5	65	23.0	40.9	4.0	34.9	44.5	3.7	M4
28	31.2	9.5	65	24.1	46.7	4.0	39.7	50.8	3.7	M5
32	37.8	11.0	65	24.1	53.4	4.0	44.5	57.0	4.3	M5
36	45.2	11.8	80	24.1	59.6	4.0	49.2	63.5	4.3	M5

All dimensions for reference only.

ACA 3103E-B

wall mount receptacle for rear panel mounting

- **Receptacle with cable clamp and telescopic bushing**
- **Includes grommet and grommet sleeve**
- **Four through mounting holes or optional metric threaded holes**

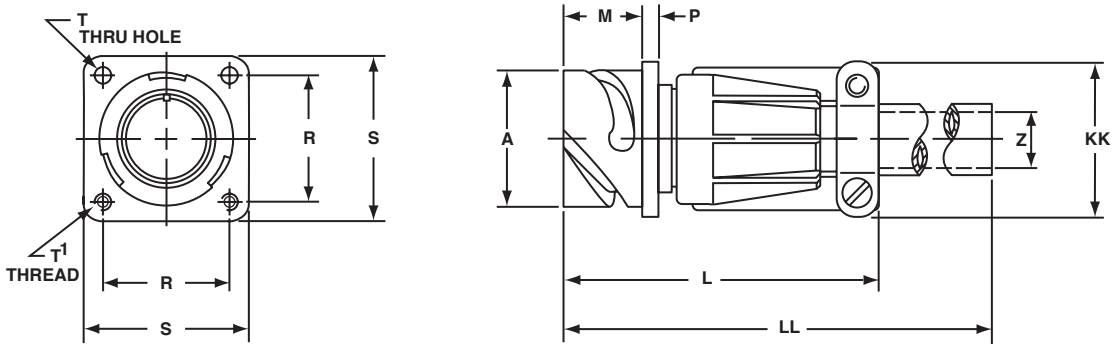

Inches

Shell Size	L Max.	M + .016 – .000	N + .000 – .006	P ± .008	R ± .004	S ± .012	T Thru Hole + .004 – .000	Z Max.	KK Max.	LL Max.
10SL	2.362	.717	.717	.110	.717	1.000	.126	.256	.894	4.720
14S	2.440	.717	.969	.126	.906	1.181	.126	.354	1.083	4.720
16S	2.756	.717	1.079	.126	.969	1.280	.126	.433	1.181	4.720
16	2.756	.846	1.079	.126	.969	1.280	.126	.433	1.181	4.921
18	3.031	.907	1.213	.157	1.063	1.378	.126	.559	1.300	4.921
20	3.031	.907	1.346	.157	1.157	1.496	.126	.622	1.476	4.921
22	3.031	.907	1.472	.157	1.252	1.614	.126	.622	1.476	4.921
24	3.346	.907	1.610	.157	1.374	1.752	.146	.843	1.705	4.921
28	3.346	.947	1.839	.157	1.563	2.000	.146	.843	1.705	4.921
32	3.346	.947	2.102	.157	1.752	2.244	.169	1.051	2.035	4.921
36	4.134	.947	2.346	.157	1.937	2.500	.169	1.248	2.283	5.315

Millimeters

Shell Size	L Max.	M + 0.4 – 0.0	N + 0.00 – 0.15	P ± 0.2	R ± 0.1	S ± 0.3	T Thru Hole + 0.1 – 0.0	T1 Metric Thread	Z Max.	KK Max.	LL Max.
10SL	60	18.2	18.2	2.8	18.2	25.4	3.2	M4	6.5	22.7	120
14S	62	18.2	24.6	3.2	23.0	30.0	3.2	M4	9.0	27.5	120
16S	70	18.2	27.4	3.2	24.6	32.5	3.2	M4	11.0	30.0	120
16	70	21.5	27.4	3.2	24.6	32.5	3.2	M4	11.0	30.0	125
18	77	23.0	30.8	4.0	27.0	35.0	3.2	M4	14.2	33.0	125
20	77	23.0	34.2	4.0	29.4	38.0	3.2	M4	15.8	37.5	125
22	77	23.0	37.4	4.0	31.8	41.0	3.2	M4	15.8	37.5	125
24	85	23.0	40.9	4.0	34.9	44.5	3.7	M4	21.4	43.3	125
28	85	24.1	46.7	4.0	39.7	50.8	3.7	M5	21.4	43.3	125
32	85	24.1	53.4	4.0	44.5	57.0	4.3	M5	26.7	51.7	125
36	105	24.1	59.6	4.0	49.2	63.5	4.3	M5	31.7	58.0	135

All dimensions for reference only.

ACA 3103G-B

wall mount receptacle for rear panel mounting

- **Receptacle with endbell for heat shrink termination**
- **Does not include grommet and grommet sleeve**
- **Four through mounting holes or optional metric threaded holes**

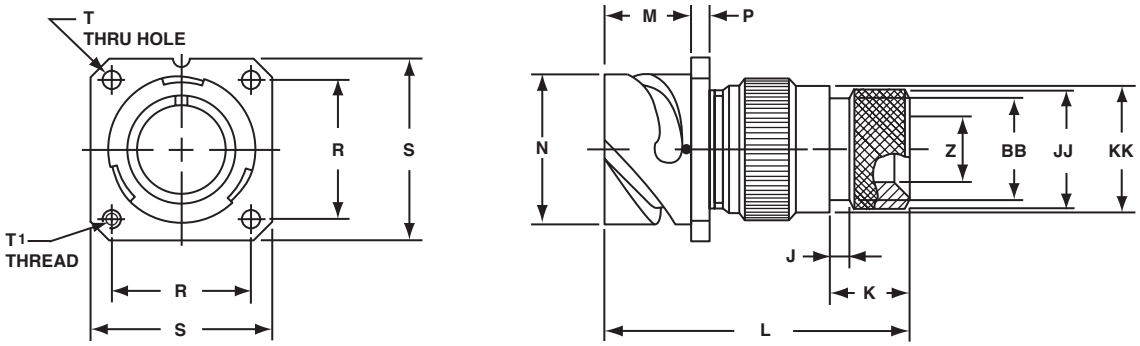

Inches

Shell Size	J ± .008	K ± .020	L Max.	M + .016 − .000	N + .000 − .006	P ± .008	R ± .004	S ± .012	T Thru Hole + .004 − .000	Z Min.	BB Max.	JJ ± .008	KK ± .008
10SL	.138	.461	1.969	.717	.717	.110	.717	1.000	.126	.303	.524	.610	.669
14S	.138	.461	1.969	.717	.969	.126	.906	1.181	.126	.417	.669	.752	.791
16S	.138	.461	1.969	.717	1.079	.126	.969	1.280	.126	.531	.862	.941	.925
16	.138	.453	2.362	.846	1.079	.126	.969	1.280	.126	.531	.862	.941	.925
18	.138	.453	2.362	.907	1.213	.157	1.063	1.378	.126	.575	.862	.941	1.043
20	.138	.500	2.559	.907	1.346	.157	1.157	1.496	.126	.736	1.031	1.165	1.189
22	.138	.500	2.559	.907	1.472	.157	1.252	1.614	.126	.819	1.031	1.165	1.323
24	.138	.500	2.559	.907	1.610	.157	1.374	1.752	.146	.969	1.358	1.488	1.421
28	.138	.500	2.559	.947	1.839	.157	1.563	2.000	.146	1.062	1.358	1.488	1.630
32	.138	.598	2.756	.947	2.102	.157	1.752	2.244	.169	1.311	1.717	1.882	1.913
36	.138	.598	3.150	.947	2.346	.157	1.937	2.500	.169	1.516	1.717	1.882	2.157

Millimeters

Shell Size	J ± 0.2	K ± 0.5	L Max.	M + 0.4 − 0.0	N + 0.00 − 0.15	P ± 0.2	R ± 0.1	S ± 0.3	T Thru Hole + 0.1 − 0.0	T[1] Metric Thread	Z Min.	BB Max.	JJ ± 0.2	KK ± 0.2
10SL	3.5	11.7	50	18.2	18.2	2.8	18.2	25.4	3.2	M4	7.7	13.3	15.5	17.0
14S	3.5	11.7	50	18.2	24.6	3.2	23.0	30.0	3.2	M4	10.6	17.0	19.1	20.1
16S	3.5	11.7	50	18.2	27.4	3.2	24.6	32.5	3.2	M4	13.5	21.9	23.9	23.5
16	3.5	11.5	60	21.5	27.4	3.2	24.6	32.5	3.2	M4	13.5	21.9	23.9	23.5
18	3.5	11.5	60	23.0	30.8	4.0	27.0	35.0	3.2	M4	14.6	21.9	23.9	26.5
20	3.5	12.7	65	23.0	34.2	4.0	29.4	38.0	3.2	M4	18.7	26.2	29.6	30.2
22	3.5	12.7	65	23.0	37.4	4.0	31.8	41.0	3.2	M4	20.8	26.2	29.6	33.6
24	3.5	12.7	65	23.0	40.9	4.0	34.9	44.5	3.7	M4	24.6	34.5	37.8	36.1
28	3.5	12.7	65	24.1	46.7	4.0	39.7	50.8	3.7	M5	27.0	34.5	37.8	41.4
32	3.5	15.2	70	24.1	53.4	4.0	44.5	57.0	4.3	M5	33.3	43.6	47.8	48.6
36	3.5	15.2	80	24.1	59.6	4.0	49.2	63.5	4.3	M5	38.5	43.6	47.8	54.8

All dimensions for reference only.

ACA 3103R-B

wall mount receptacle for rear panel mounting

- **Receptacle with short endbell for individual wire sealing**
- **Includes grommet and grommet sleeve**
- **Four through mounting holes or optional metric threaded holes**

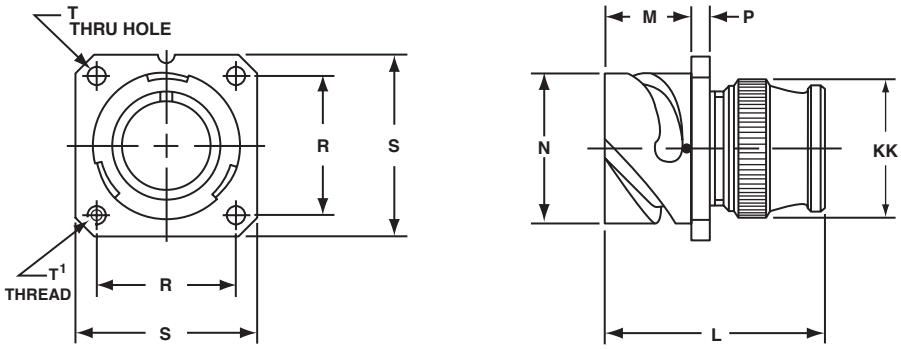

Inches

Shell Size	L Max.	M + .016 – .000	N + .000 – .006	P ± .008	R ± .004	S ± .012	T Thru Hole + .004 – .000	KK Max.
10SL	1.890	.717	.717	.110	.717	1.000	.126	.787
14S	1.890	.717	.969	.126	.906	1.181	.126	.945
16S	1.890	.717	1.079	.126	.969	1.280	.126	1.024
16	2.205	.846	1.079	.126	.969	1.280	.126	1.024
18	2.244	.907	1.213	.157	1.063	1.378	.126	1.161
20	2.244	.907	1.346	.157	1.157	1.496	.126	1.299
22	2.244	.907	1.472	.157	1.252	1.614	.126	1.417
24	2.244	.907	1.610	.157	1.374	1.752	.146	1.575
28	2.244	.947	1.839	.157	1.563	2.000	.146	1.811
32	2.362	.947	2.102	.157	1.752	2.244	.169	2.028
36	2.362	.947	2.346	.157	1.937	2.500	.169	2.283

Millimeters

Shell Size	L Max.	M + 0.4 – 0.0	N + 0.00 – 0.15	P ± 0.2	R ± 0.1	S ± 0.3	T Thru Hole + 0.1 – 0.0	T1 Metric Thread	KK Max.
10SL	48.0	18.2	18.2	2.8	18.2	25.4	3.2	M4	20.0
14S	48.0	18.2	24.6	3.2	23.0	30.0	3.2	M4	24.0
16S	48.0	18.2	27.4	3.2	24.6	32.5	3.2	M4	26.0
16	56.0	21.5	27.4	3.2	24.6	32.5	3.2	M4	26.0
18	57.0	23.0	30.8	4.0	27.0	35.0	3.2	M4	29.5
20	57.0	23.0	34.2	4.0	29.4	38.0	3.2	M4	33.0
22	57.0	23.0	37.4	4.0	31.8	41.0	3.2	M4	36.0
24	57.0	23.0	40.9	4.0	34.9	44.5	3.7	M4	40.0
28	57.0	24.1	46.7	4.0	39.7	50.8	3.7	M5	46.0
32	60.0	24.1	53.4	4.0	44.5	57.0	4.3	M5	51.5
36	60.0	24.1	59.6	4.0	49.2	63.5	4.3	M5	58.0

All dimensions for reference only.

ACA 3106F-B

straight plug

- **Plug with backshell and rear accessory threads**
- **Includes grommet and grommet sleeve**

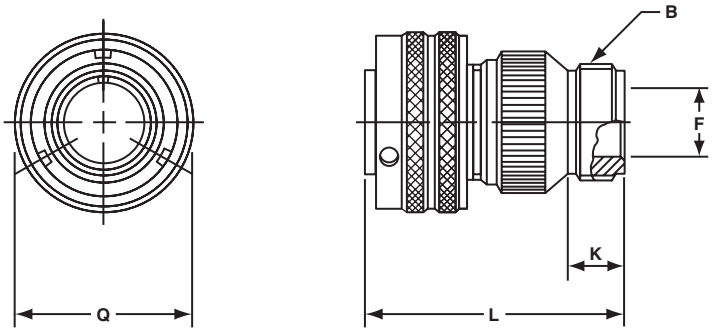

Inches

Shell Size	B Thread Class 2A	F Min.	K Min.	L Max.	Q Max.
10SL	.6250-24UNEF	.409	.374	1.969	.898
14S	.7500-20UNEF	.520	.374	1.969	1.150
16S	.8750-20UNEF	.638	.374	1.969	1.260
16	.8750-20UNEF	.638	.374	2.362	1.260
18	1.0000-20UNEF	.756	.374	2.362	1.437
20	1.1875-18UNEF	.867	.374	2.362	1.571
22	1.1875-18UNEF	.965	.374	2.362	1.697
24	1.4375-18UNEF	1.094	.374	2.560	1.835
28	1.4375-18UNEF	1.228	.374	2.560	2.102
32	1.7500-18UNS	1.488	.433	2.560	2.366
36	2.0000-18UNS	1.780	.465	3.150	2.610

Millimeters

Shell Size	F Min.	K Min.	L Max.	Q Max.
10SL	10.4	9.5	50	22.8
14S	13.2	9.5	50	29.2
16S	16.2	9.5	50	32.0
16	16.2	9.5	60	32.0
18	19.2	9.5	60	36.5
20	22.0	9.5	60	39.9
22	24.5	9.5	60	43.1
24	27.8	9.5	65	46.6
28	31.2	9.5	65	53.4
32	37.8	11.0	65	60.1
36	45.2	11.8	80	66.3

All dimensions for reference only.

ACA 3106E-B

straight plug

- **Plug with cable clamp and telescopic bushing**
- **Includes grommet and grommet sleeve**

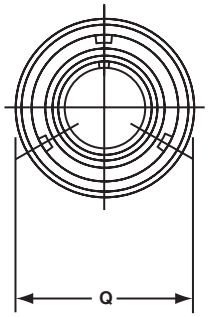

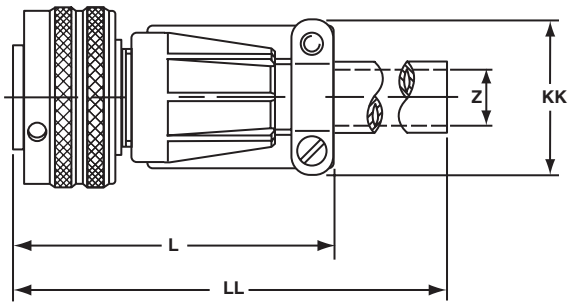

Inches

Shell Size	L Max.	Q Max.	Z Max.	KK Max.	LL Max.
10SL	2.165	.898	.256	.894	4.528
14S	2.362	1.150	.354	1.083	4.528
16S	2.362	1.260	.433	1.181	4.528
16	2.756	1.260	.433	1.181	4.724
18	2.756	1.437	.559	1.268	4.724
20	2.953	1.571	.622	1.476	4.724
22	2.953	1.697	.622	1.476	4.724
24	3.543	1.835	.843	1.705	4.724
28	3.543	2.102	.843	1.705	4.724
32	3.543	2.366	1.051	2.035	4.724
36	3.937	2.610	1.248	2.283	5.118

Millimeters

Shell Size	L Max.	Q Max.	Z Max.	KK Max.	LL Max.
10SL	55	22.8	6.5	22.7	115
14S	60	29.2	9.0	27.5	115
16S	60	32.0	11.0	30.0	115
16	70	32.0	11.0	30.0	120
18	70	36.5	14.2	32.2	120
20	75	39.9	15.8	37.5	120
22	75	43.1	15.8	37.5	120
24	90	46.6	21.4	43.3	120
28	90	53.4	21.4	43.3	120
32	90	60.1	26.7	51.7	120
36	100	66.3	31.7	58.0	130

All dimensions for reference only.

ACA 3106G-B

straight plug

- **Plug with backshell for heat shrink termination**
- **Does not include grommet and grommet sleeve**

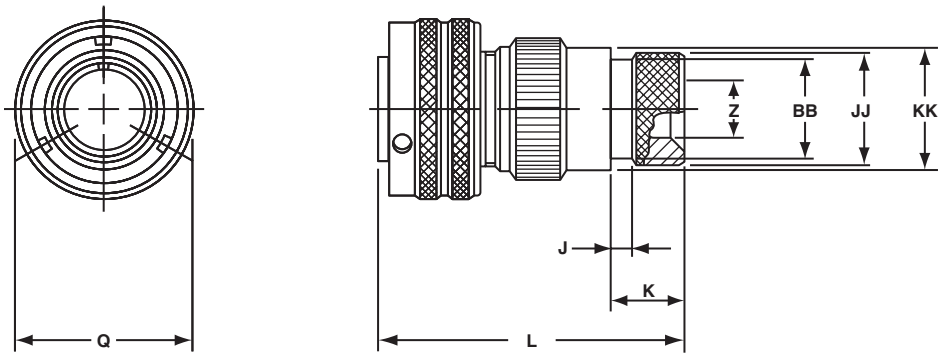

Inches

Shell Size	J ± .008	K ± .020	L Max.	Q Max.	Z Min.	BB Max.	JJ ± .008	KK ± .008
10SL	.138	.461	1.969	.898	.303	.524	.610	.669
14S	.138	.461	1.969	1.150	.417	.669	.752	.791
16S	.138	.461	1.969	1.260	.531	.862	.941	.925
16	.138	.453	2.362	1.260	.531	.862	.941	.925
18	.138	.453	2.362	1.437	.575	.862	.941	1.043
20	.138	.500	2.559	1.571	.736	1.031	1.165	1.189
22	.138	.500	2.559	1.697	.819	1.031	1.165	1.323
24	.138	.500	2.559	1.835	.969	1.358	1.488	1.421
28	.138	.500	2.559	2.102	1.063	1.358	1.488	1.630
32	.138	.598	2.756	2.366	1.311	1.717	1.882	1.913
36	.138	.598	3.150	2.610	1.516	1.717	1.882	2.157

Millimeters

Shell Size	J ± 0.2	K ± 0.5	L Max.	Q Max.	Z Min.	BB Max.	JJ ± 0.2	KK ± 0.2
10SL	3.5	11.7	50	22.8	7.7	13.3	15.5	17.0
14S	3.5	11.7	50	29.2	10.6	17.0	19.1	20.1
16S	3.5	11.7	50	32.0	13.5	21.9	23.9	23.5
16	3.5	11.5	60	32.0	13.5	21.9	23.9	23.5
18	3.5	11.5	60	36.5	14.6	21.9	23.9	26.5
20	3.5	12.7	65	39.9	18.7	26.2	29.6	30.2
22	3.5	12.7	65	43.1	20.8	26.2	29.6	33.6
24	3.5	12.7	65	46.6	24.6	34.5	37.8	36.1
28	3.5	12.7	65	53.4	27.0	34.5	37.8	41.4
32	3.5	15.2	70	60.1	33.3	43.6	47.8	48.6
36	3.5	15.2	80	66.3	38.5	43.6	47.8	54.8

All dimensions for reference only.

ACA 3106R-B

straight plug

- **Plug with short endbell for individual wire sealing**
- **Includes grommet and grommet sleeve**

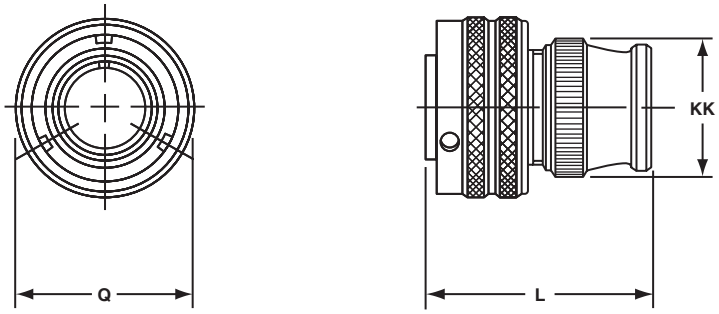

Inches

Shell Size	L Max.	Q Max.	KK Max.
10SL	1.417	.898	.787
14S	1.437	1.150	.945
16S	1.437	1.260	1.024
16	1.929	1.260	1.024
18	1.929	1.437	1.161
20	1.969	1.571	1.299
22	1.969	1.697	1.417
24	2.008	1.835	1.543
28	2.008	2.102	1.811
32	2.087	2.366	2.028
36	2.106	2.610	2.283

Millimeters

Shell Size	L Max.	Q Max.	KK Max.
10SL	36.0	22.8	20.0
14S	36.5	29.2	24.0
16S	36.5	32.0	26.0
16	49.0	32.0	26.0
18	49.0	36.5	29.5
20	50.0	39.9	33.0
22	50.0	43.1	36.0
24	51.0	46.6	40.0
28	51.0	53.4	46.0
32	53.0	60.1	51.5
36	53.5	66.3	58.0

All dimensions for reference only.

ACA 3107A-B

jam nut receptacle

- **For rear panel single hole mounting**
- **Panel seal O-ring included**
- **Environment proof**

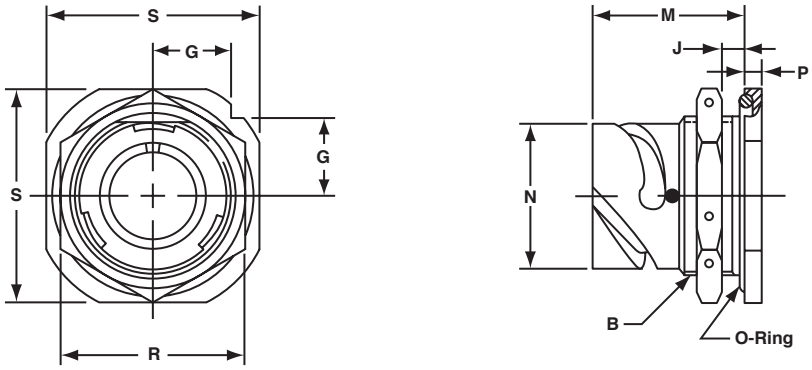

Inches

Shell Size	B Thread Class 2A	G ± .012	J Wall Thickness Min.	J Wall Thickness Max.	M ± .012	N + .000 − .006	P ± .007	R ± .016	S ± .012
10SL	.8750-20 UNEF	.441	.094	.205	.965	.717	.157	1.062	1.252
14S	1.1250-18 UNEF	.575	.094	.295	1.055	.969	.189	1.312	1.626
16S	1.2500-18 UNEF	.618	.094	.295	1.055	1.079	.189	1.500	1.748
16	1.2500-18 UNEF	.618	.094	.295	1.264	1.079	.189	1.500	1.748
18	1.3750-18 UNEF	.661	.094	.354	1.327	1.213	.189	1.562	1.875
20	1.5000-18 UNEF	.709	.094	.358	1.327	1.346	.189	1.750	2.000
22	1.6250-18 UNEF	.795	.094	.358	1.327	1.472	.189	2.000	2.134
24	1.7500-18 UNEF	.795	.094	.358	1.327	1.610	.189	2.000	2.252
28	2.0000-18 UNS	.886	.094	.394	1.386	1.839	.220	2.188	2.500
32	2.2500-16 UN	.972	.094	.394	1.386	2.102	.220	2.438	2.748
36	2.5000-16 UN	1.059	.094	.327	1.386	2.346	.220	2.812	3.000

Millimeters

Shell Size	G ± 0.3	J Wall Thickness Min.	J Wall Thickness Max.	M ± 0.3	N + 0.00 − 0.15	P ± 0.2	R ± 0.4	S ± 0.3
10SL	11.2	2.4	5.2	24.5	18.2	4.0	27	31.8
14S	14.6	2.4	7.5	26.8	24.6	4.8	33	41.3
16S	15.7	2.4	7.5	26.8	27.4	4.8	38	44.4
16	15.7	2.4	7.5	32.1	27.4	4.8	38	44.4
18	16.8	2.4	9.0	33.7	30.8	4.8	40	47.6
20	18.0	2.4	9.1	33.7	34.2	4.8	44	50.8
22	20.2	2.4	9.1	33.7	37.4	4.8	51	54.2
24	20.2	2.4	9.1	33.7	40.9	4.8	51	57.2
28	22.5	2.4	10.0	35.2	46.7	5.6	56	63.5
32	24.7	2.4	10.0	35.2	53.4	5.6	62	69.8
36	26.9	2.4	8.3	35.2	59.6	5.6	71	76.2

All dimensions for reference only.

ACA 3108F-B

90° angle plug

- **90° plug for angled attachment to panels with rear accessory threads**
- **Includes grommet and grommet sleeve**

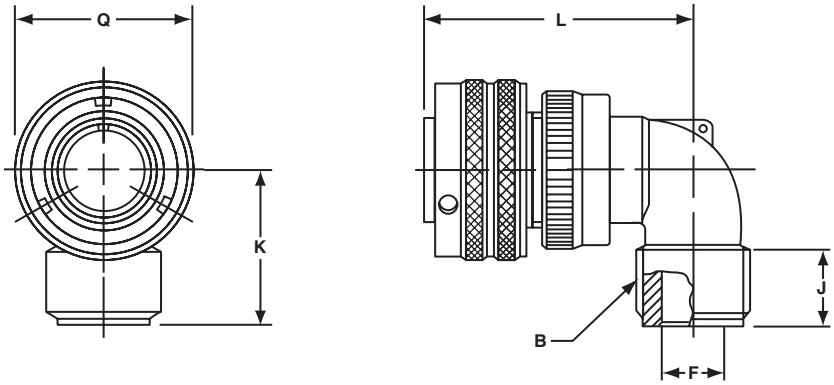

Inches

Shell Size	B Thread Class 2A	F Max.	J Min.	K Max.	L Max.	Q Max.
10SL	.6250-24UNEF	.337	.370	1.181	1.772	.898
14S	.7500-20UNEF	.462	.370	1.181	1.850	1.150
16S	.8750-20UNEF	.587	.370	1.181	1.890	1.299
16	.8750-20UNEF	.587	.370	1.181	2.244	1.299
18	1.0000-20UNEF	.685	.370	1.378	2.283	1.437
20	1.1875-18UNEF	.810	.370	1.378	2.402	1.571
22	1.1875-18UNEF	.915	.370	1.378	2.402	1.697
24	1.4375-18UNEF	1.025	.370	1.575	2.598	1.835
28	1.4375-18UNEF	1.139	.370	1.575	2.598	2.102
32	1.7500-18UNS	1.447	.433	1.772	2.835	2.366
36	2.0000-18UNS	1.687	.496	1.969	2.953	2.610

Millimeters

Shell Size	F Max.	J Min.	K Max.	L Max.	Q Max.
10SL	8.5	9.4	30	45	22.8
14S	11.7	9.4	30	47	29.2
16S	14.9	9.4	30	48	33.0
16	14.9	9.4	30	57	33.0
18	17.4	9.4	35	58	36.5
20	20.5	9.4	35	61	39.9
22	23.2	9.4	35	61	43.1
24	26.0	9.4	40	66	46.6
28	28.9	9.4	40	66	53.4
32	36.7	11.0	45	72	60.1
36	42.8	12.6	50	75	66.3

All dimensions for reference only.

ACA 3108E-B

90° angle plug

- **90° plug for angled attachment to panels with cable clamp and telescopic bushing**
- **Includes grommet and grommet sleeve**

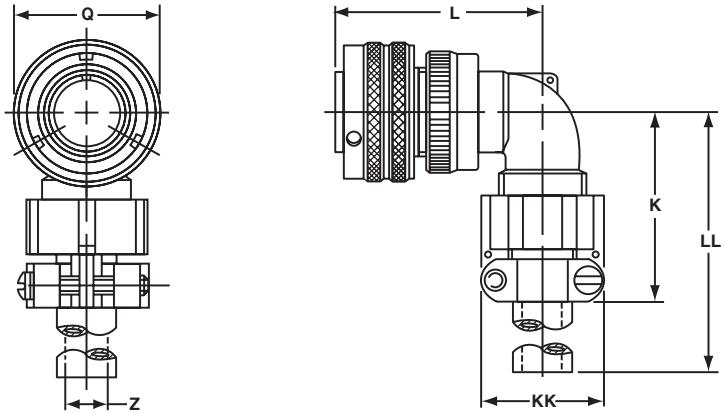

Inches

Shell Size	K Max.	L Max.	Q Max.	Z Max.	KK Max.	LL Max.
10SL	1.654	1.772	.898	.220	.894	3.937
14S	1.654	1.850	1.150	.312	1.083	3.937
16S	1.772	1.890	1.299	.437	1.181	3.937
16	1.772	2.244	1.299	.437	1.181	3.937
18	2.087	2.283	1.437	.562	1.299	3.937
20	2.087	2.402	1.571	.625	1.476	3.937
22	2.087	2.402	1.697	.625	1.476	3.937
24	2.283	2.598	1.835	.750	1.705	3.937
28	2.283	2.598	2.102	.750	1.705	3.937
32	2.598	2.835	2.366	.937	2.061	4.331
36	2.717	2.953	2.610	1.250	2.283	4.331

Millimeters

Shell Size	K Max.	L Max.	Q Max.	Z Max.	KK Max.	LL Max.
10SL	42	45	22.8	5.58	22.7	100
14S	42	47	29.2	7.92	27.5	100
16S	45	48	33.0	11.09	30.0	100
16	45	57	33.0	11.09	30.0	100
18	53	58	36.5	14.27	33.0	100
20	53	61	39.9	15.87	37.5	100
22	53	61	43.1	15.87	37.5	100
24	58	66	46.6	19.05	43.3	100
28	58	66	53.4	19.05	43.3	100
32	66	72	60.1	23.79	51.7	110
36	69	75	66.3	31.75	58.0	110

All dimensions for reference only.

Amphenol® GT Connectors
with reverse bayonet coupling

Designed originally for use by the military, the heavy duty GT connector has become widely used in commercial, geophysical, aerospace, ground support and shipboard applications. It is the preferred connector for mass transit.

Variety of Shell Styles are Available

Wall Mount Receptacle

Inline Receptacle

Straight Plug

Jam Nut Receptacle

NOTE:
The connector products in this brochure were formerly known as Bendix® products. These products are now manufactured and sold under the Amphenol® brand name. The name "Amphenol" will replace the name "Bendix" on products and literature in the future.

Amphenol® GT reverse bayonet coupling connectors with SAE AS50151 insert patterns features:

- Quick positive coupling
- Audible, tactile and visual indication of full coupling
- Waterproof – IP67 rated
- No lockwiring required
- High shock and vibration capabilities
- Inserts available in Neoprene and Viton* materials
- Low smoke/flame retardant inserts also available
- Operating temperature range:
  With Neoprene inserts: –55°C to +125°C
  With Viton** inserts: –50°C to +200°C
  With low smoke/flame retardant inserts: –55°C to +125°C
- Available in both crimp and solder terminations
- Contacts available in gold and silver plating
- Numerous commercial finishes available
- Zinc alloy plating (cadmium free) available
- Rugged construction; aluminum or stainless steel components
- Available with resilient cover coupling for added damage protection and increased gripping surface
- Intermateable with existing VG95234 connectors
- 2000 couplings minimum
- UL recognized
- Up to 50% more ampacity with the use of RADSOK® technology (see page 54)

Amphenol's special offerings of GT Series connectors (see end of catalog) include: GT Amphe-Power® Connectors with RADSOK® technology, the GTC-M Series with metal clip inserts and GT-PC Series for high voltage power applications. There is also information on other Amphenol Industrial Products for the Rail Industry at the end of this catalog.

For further information on your individual application requirements, contact:

Amphenol Corporation
Amphenol Industrial Operations
191 Delaware Avenue
Sidney, New York 13838-1395
Phone: 888-364-9011 Fax: 520-397-7169
www.amphenol-industrial.com

**For availability of Viton inserts consult Amphenol, Sidney, NY.
Viton is a registered trademark of Dupont/Dow Corning.

GT Connector Classes

GT01A
inline receptacle

- **Includes backshell for accessory attachment**
- **Without wire sealing grommet and cable clamp**
- **Non-environment proof**

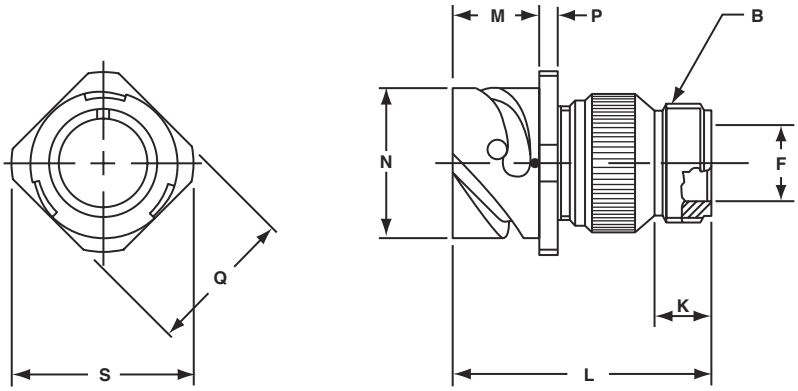

Inches

Shell Size	B Thread Class 2A	F Min.	K Min.	L Max.	M + .016 – .000	N + .000 – .006	P ± .008	Q ± .008	S Max.
10SL	.6250-24 UNEF	.409	.374	1.969	.717	.717	.110	.811	.992
14S	.7500-20 UNEF	.520	.374	1.969	.717	.969	.126	1.000	1.173
16S	.8750-20 UNEF	.638	.374	1.969	.717	1.079	.126	1.126	1.272
16	.8750-20 UNEF	.638	.374	2.362	.846	1.079	.126	1.126	1.272
18	1.0000-20 UNEF	.756	.374	2.362	.907	1.213	.157	1.248	1.370
20	1.1875-18 UNEF	.867	.374	2.362	.907	1.346	.157	1.374	1.488
22	1.1875-18 UNEF	.965	.374	2.362	.907	1.472	.157	1.500	1.618
24	1.4375-18 UNEF	1.094	.374	2.560	.907	1.610	.157	1.626	1.756
28	1.4375-18 UNEF	1.228	.374	2.560	.947	1.839	.157	1.874	2.004
32	1.7500-18 UNS	1.488	.433	2.560	.947	2.102	.157	2.126	2.248
36	2.0000-18 UNS	1.780	.465	3.150	.947	2.346	.157	2.386	2.504
40	2.2500-16 UN	2.016	.465	3.150	.947	2.579	.157	2.618	2.756

Millimeters

Shell Size	F Min.	K Min.	L Max.	M + 0.4 – 0.0	N + 0.00 – 0.15	P ± 0.2	Q ± 0.2	S Max.
10SL	10.4	9.5	50	18.2	18.2	2.8	20.6	25.2
14S	13.2	9.5	50	18.2	24.6	3.2	25.4	29.8
16S	16.2	9.5	50	18.2	27.4	3.2	28.6	32.3
16	16.2	9.5	60	21.5	27.4	3.2	28.6	32.3
18	19.2	9.5	60	23.0	30.8	4.0	31.7	34.8
20	22.0	9.5	60	23.0	34.2	4.0	34.9	37.8
22	24.5	9.5	60	23.0	37.4	4.0	38.1	41.1
24	27.8	9.5	65	23.0	40.9	4.0	41.3	44.6
28	31.2	9.5	65	24.1	46.7	4.0	47.6	50.9
32	37.8	11.0	65	24.1	53.4	4.0	54.0	57.1
36	45.2	11.8	80	24.1	59.6	4.0	60.6	63.6
40	51.2	11.8	80	24.1	65.5	4.0	66.5	70.0

All dimensions for reference only.

GT01AF/01F
inline receptacle

GT01AF
- **With cable clamp**
- **Wire sealing grommet not included**
- **Non-environment proof**

GT01F
- **With wire sealing grommet and cable clamp**
- **For use with individual wires**
- **Environment proof**

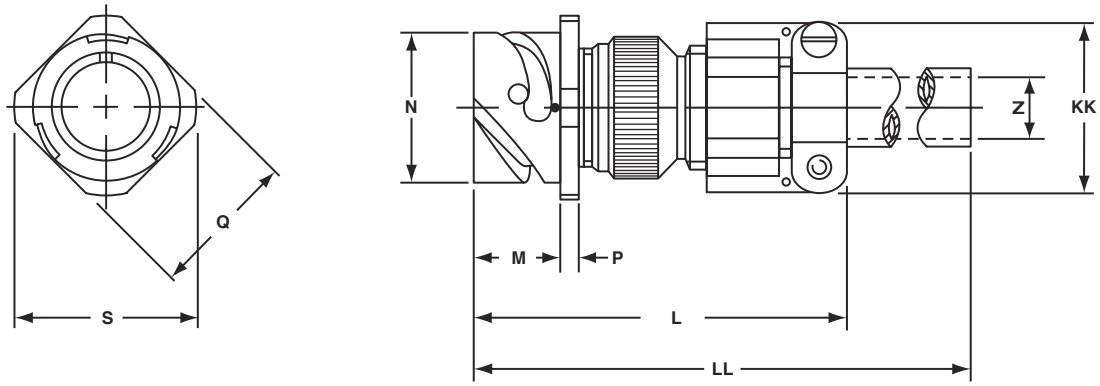

Inches

Shell Size	L Max.	M + .016 – .000	N + .000 – .006	P ± .008	Q ± .008	S Max.	Z Nominal	KK Max.	LL Max.
10SL	2.362	.717	.717	.110	.811	.992	.220	.894	4.720
14S	2.440	.717	.969	.126	1.000	1.173	.312	1.083	4.720
16S	2.756	.717	1.079	.126	1.126	1.272	.437	1.181	4.720
16	2.756	.846	1.079	.126	1.126	1.272	.437	1.181	4.921
18	3.031	.907	1.213	.157	1.248	1.370	.562	1.300	4.921
20	3.031	.907	1.346	.157	1.374	1.488	.625	1.476	4.921
22	3.031	.907	1.472	.157	1.500	1.618	.625	1.476	4.921
24	3.346	.907	1.610	.157	1.626	1.756	.750	1.705	4.921
28	3.346	.947	1.839	.157	1.874	2.004	.750	1.705	4.921
32	3.346	.947	2.102	.157	2.126	2.248	.937	2.035	4.921
36	4.134	.947	2.346	.157	2.386	2.504	1.250	2.283	5.315
40	5.118	.947	2.579	.157	2.618	2.756	1.375	2.579	5.709

Millimeters

Shell Size	L Max.	M + 0.4 – 0.0	N + 0.00 – 0.15	P ± 0.2	Q ± 0.2	S Max.	Z Nominal	KK Max.	LL Max.
10SL	60	18.2	18.2	2.8	20.6	25.2	5.58	22.7	120
14S	62	18.2	24.6	3.2	25.4	29.8	7.92	27.5	120
16S	70	18.2	27.4	3.2	28.6	32.3	11.09	30.0	120
16	70	21.5	27.4	3.2	28.6	32.3	11.09	30.0	125
18	77	23.0	30.8	4.0	31.7	34.8	14.27	33.0	125
20	77	23.0	34.2	4.0	34.9	37.8	15.87	37.5	125
22	77	23.0	37.4	4.0	38.1	41.1	15.87	37.5	125
24	85	23.0	40.9	4.0	41.3	44.6	19.05	43.3	125
28	85	24.1	46.7	4.0	47.6	50.9	19.05	43.3	125
32	85	24.1	53.4	4.0	54.0	57.1	23.79	51.7	125
36	105	24.1	59.6	4.0	60.6	63.6	31.75	58.0	135
40	130	24.1	65.5	4.0	66.5	70.0	34.92	65.5	145

All dimensions for reference only.

GT01G
inline receptacle

- **Includes wire sealing grommet**
- **For use with heat-shrink tubing**
- **Environment proof**

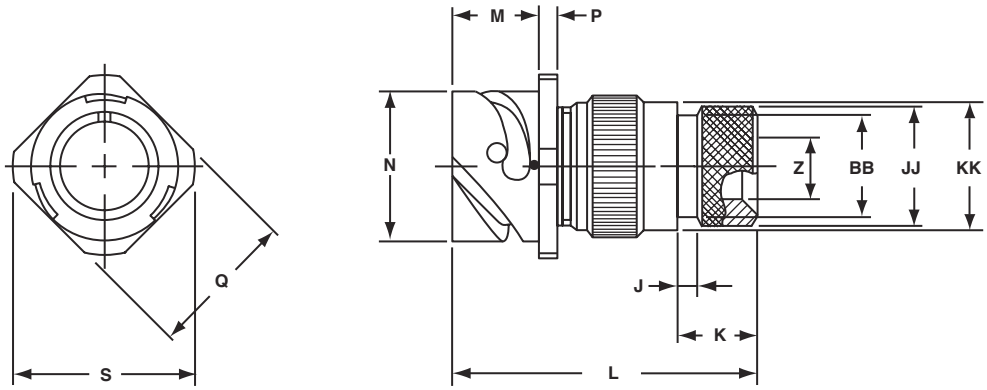

Inches

Shell Size	J ± .008	K ± .020	L Max.	M + .016 − .000	N + .000 − .006	P ± .008	Q ± .008	S Max.	Z Min.	BB Max.	JJ ± .008	KK ± .008
10SL	.138	.461	1.969	.717	.717	.110	.811	.992	.303	.524	.610	.669
14S	.138	.461	1.969	.717	.969	.126	1.000	1.173	.417	.669	.752	.791
16S	.138	.461	1.969	.717	1.079	.126	1.126	1.272	.531	.862	.941	.925
16	.138	.453	2.362	.846	1.079	.126	1.126	1.272	.531	.862	.941	.925
18	.138	.453	2.362	.907	1.213	.157	1.248	1.370	.575	.862	.941	1.043
20	.138	.500	2.559	.907	1.346	.157	1.374	1.488	.736	1.031	1.165	1.189
22	.138	.500	2.559	.907	1.472	.157	1.500	1.618	.819	1.031	1.165	1.323
24	.138	.500	2.559	.907	1.610	.157	1.626	1.756	.969	1.358	1.488	1.421
28	.138	.500	2.559	.947	1.839	.157	1.874	2.004	1.063	1.358	1.488	1.630
32	.138	.598	2.756	.947	2.102	.157	2.126	2.248	1.311	1.717	1.882	1.913
36	.138	.598	3.150	.947	2.346	.157	2.386	2.504	1.516	1.717	1.882	2.157
40	.138	.610	3.150	.947	2.579	1.57	2.618	2.756	1.898	2.071	2.276	2.402

Millimeters

Shell Size	J ± 0.2	K ± 0.5	L Max.	M + 0.4 − 0.0	N + 0.00 − 0.15	P ± 0.2	Q ± 0.2	S Max.	Z Min.	B Max.	JJ ± 0.2	KK ± 0.2
10SL	3.5	11.7	50	18.2	18.2	2.8	20.6	25.2	7.7	13.3	15.5	17.0
14S	3.5	11.7	50	18.2	24.6	3.2	25.4	29.8	10.6	17.0	19.1	20.1
16S	3.5	11.7	50	18.2	27.4	3.2	28.6	32.3	13.5	21.9	23.9	23.5
16	3.5	11.5	60	21.5	27.4	3.2	28.6	32.3	13.5	21.9	23.9	23.5
18	3.5	11.5	60	23.0	30.8	4.0	31.7	34.8	14.6	21.9	23.9	26.5
20	3.5	12.7	65	23.0	34.2	4.0	34.9	37.8	18.7	26.2	29.6	30.2
22	3.5	12.7	65	23.0	37.4	4.0	38.1	41.1	20.8	26.2	29.6	33.6
24	3.5	12.7	65	23.0	40.9	4.0	41.3	44.6	24.6	34.5	37.8	36.1
28	3.5	12.7	65	24.1	46.7	4.0	47.6	50.9	27.0	34.5	37.8	41.4
32	3.5	15.2	70	24.1	53.4	4.0	54.0	57.1	33.3	43.6	47.8	48.6
36	3.5	15.2	80	24.1	59.6	4.0	60.6	63.6	38.5	43.6	47.8	54.8
40	3.5	15.5	80	24.1	65.5	4.0	66.5	70.0	48.2	52.6	57.8	61.0

All dimensions for reference only.

GT01R
inline receptacle

- **With individual wire sealing grommet**
- **Includes backshell for conduit termination**
- **Environment proof**

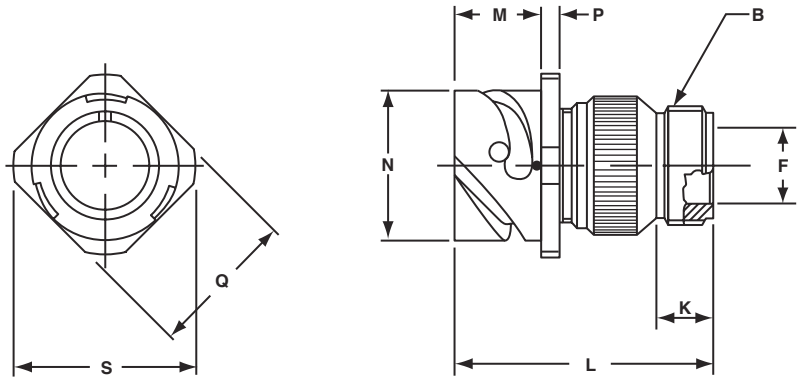

Inches

Shell Size	B Thread Class 2A	F Min.	K Min.	L Max.	M + .016 – .000	N + .000 – .006	P ± .008	Q ± .008	S Max.
10SL	.6250-24 UNEF	.409	.374	1.969	.717	.717	.110	.811	.992
14S	.7500-20 UNEF	.520	.374	1.969	.717	.969	.126	1.000	1.173
16S	.8750-20 UNEF	.638	.374	1.969	.717	1.079	.126	1.126	1.272
16	.8750-20 UNEF	.638	.374	2.362	.846	1.079	.126	1.126	1.272
18	1.0000-20 UNEF	.756	.374	2.362	.907	1.213	.157	1.248	1.370
20	1.1875-18 UNEF	.867	.374	2.362	.907	1.346	.157	1.374	1.488
22	1.1875-18 UNEF	.965	.374	2.362	.907	1.472	.157	1.500	1.618
24	1.4375-18 UNEF	1.094	.374	2.560	.907	1.610	.157	1.626	1.756
28	1.4375-18 UNEF	1.228	.374	2.560	.947	1.839	.157	1.874	2.004
32	1.7500-18 UNS	1.488	.433	2.560	.947	2.102	.157	2.126	2.248
36	2.0000-18 UNS	1.780	.465	3.150	.947	2.346	.157	2.386	2.504
40	2.2500-16 UN	2.016	.465	3.150	.947	2.579	.157	2.618	2.756

Millimeters

Shell Size	F Min.	K Min.	L Max.	M + 0.4 – 0.0	N + 0.00 – 0.15	P ± 0.2	Q ± 0.2	S Max.
10SL	10.4	9.5	50	18.2	18.2	2.8	20.6	25.2
14S	13.2	9.5	50	18.2	24.6	3.2	25.4	29.8
16S	16.2	9.5	50	18.2	27.4	3.2	28.6	32.3
16	16.2	9.5	60	21.5	27.4	3.2	28.6	32.3
18	19.2	9.5	60	23.0	30.8	4.0	31.7	34.8
20	22.0	9.5	60	23.0	34.2	4.0	34.9	37.8
22	24.5	9.5	60	23.0	37.4	4.0	38.1	41.1
24	27.8	9.5	65	23.0	40.9	4.0	41.3	44.6
28	31.2	9.5	65	24.1	46.7	4.0	47.6	50.9
32	37.8	11.0	65	24.1	53.4	4.0	54.0	57.1
36	45.2	11.8	80	24.1	59.6	4.0	60.6	63.6
40	51.2	11.8	80	24.1	65.5	4.0	66.5	70.0

All dimensions for reference only.

GT01RV
inline receptacle

- **Includes wire sealing grommet**
- **For use with individual wires**
- **Environment proof**

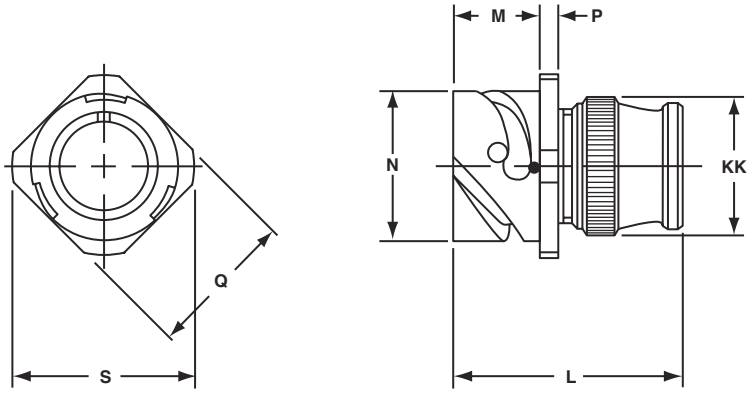

Inches

Shell Size	L Max.	M + .016 – .000	N + .000 – .006	P ± .008	Q ± .008	S Max.	KK Max.
10SL	1.890	.717	.717	.110	.811	.992	.787
14S	1.890	.717	.969	.126	1.000	1.173	.945
16S	1.890	.717	1.079	.126	1.126	1.272	1.024
16	2.205	.846	1.079	.126	1.126	1.272	1.024
18	2.244	.907	1.213	.157	1.248	1.370	1.161
20	2.244	.907	1.346	.157	1.374	1.488	1.299
22	2.244	.907	1.472	.157	1.500	1.618	1.417
24	2.244	.907	1.610	.157	1.626	1.756	1.575
28	2.244	.947	1.839	.157	1.874	2.004	1.811
32	2.362	.947	2.102	.157	2.126	2.248	2.028
36	2.362	.947	2.346	.157	2.386	2.504	2.283
40	2.362	.947	2.579	.157	2.618	2.756	2.539

Millimeters

Shell Size	L Max.	M + 0.4 – 0.0	N + 0.00 – 0.15	P ± 0.2	Q ± 0.2	S Max.	KK Max.
10SL	48.0	18.2	18.2	2.8	20.6	25.2	20.0
14S	48.0	18.2	24.6	3.2	25.4	29.8	24.0
16S	48.0	18.2	27.4	3.2	28.6	32.3	26.0
16	56.0	21.5	27.4	3.2	28.6	32.3	26.0
18	57.0	23.0	30.8	4.0	31.7	34.8	29.5
20	57.0	23.0	34.2	4.0	34.9	37.8	33.0
22	57.0	23.0	37.4	4.0	38.1	41.1	36.0
24	57.0	23.0	40.9	4.0	41.3	44.6	40.0
28	57.0	24.1	46.7	4.0	47.6	50.9	46.0
32	60.0	24.1	53.4	4.0	54.0	57.1	51.5
36	60.0	24.1	59.6	4.0	60.6	63.6	58.0
40	60.0	24.1	65.5	4.0	66.5	70.0	64.5

All dimensions for reference only.

GT02R
box mount receptacle for front panel mounting

GT02R
- **Environment proof when mounted with proper panel sealing gasket** **(see page 80)**
- **For rear mounting information see** **page 83**

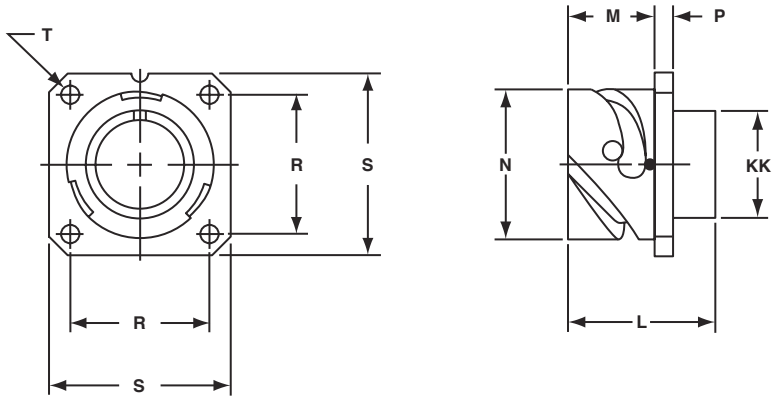

Inches

Shell Size	L ± .012	M + .016 − .000	N + .000 − .006	P ± .008	R ± .004	S ± .012	T + .004 − .000	KK Max.
10SL	1.087	.717	.717	.110	.717	1.000	.126	.626
14S	1.087	.717	.969	.126	.906	1.181	.126	.756
16S	1.087	.717	1.079	.126	.969	1.280	.126	.882
16	1.331	.846	1.079	.126	.969	1.280	.126	.882
18	1.331	.907	1.213	.157	1.063	1.378	.126	1.008
20	1.331	.907	1.346	.157	1.157	1.496	.126	1.142
22	1.331	.907	1.472	.157	1.252	1.614	.126	1.268
24	1.331	.907	1.610	.157	1.374	1.752	.146	1.390
28	1.406	.947	1.839	.157	1.563	2.000	.146	1.630
32	1.469	.947	2.102	.157	1.752	2.244	.169	1.882
36	1.469	.947	2.346	.157	1.937	2.500	.169	2.063
40	1.469	.947	2.579	.157	2.185	2.752	.169	2.323

Shell Size	L ± 0.3	M + 0.4 − 0.0	N + 0.00 − 0.15	P ± 0.2	R ± 0.1	S ± 0.3	T + 0.1 − 0.0	KK Max.
10SL	27.6	18.2	18.2	2.8	18.2	25.4	3.2	15.9
14S	27.6	18.2	24.6	3.2	23.0	30.0	3.2	19.2
16S	27.6	18.2	27.4	3.2	24.6	32.5	3.2	22.4
16	33.8	21.5	27.4	3.2	24.6	32.5	3.2	22.4
18	33.8	23.0	30.8	4.0	27.0	35.0	3.2	25.6
20	33.8	23.0	34.2	4.0	29.4	38.0	3.2	29.0
22	33.8	23.0	37.4	4.0	31.8	41.0	3.2	32.2
24	33.8	23.0	40.9	4.0	34.9	44.5	3.7	35.3
28	35.7	24.1	46.7	4.0	39.7	50.8	3.7	41.4
32	37.3	24.1	53.4	4.0	44.5	57.0	4.3	47.8
36	37.3	24.1	59.6	4.0	49.2	63.5	4.3	52.4
40	37.3	24.1	65.5	4.0	55.5	69.9	4.3	59.0

All dimensions for reference only.

GT030
square flange receptacle for rear panel mounting

- **Four through mounting holes or optional threaded holes**
- **Threaded rear to accept accessory attachment**
- **Environment proof when mounted with a proper sealing gasket (see page 80)**

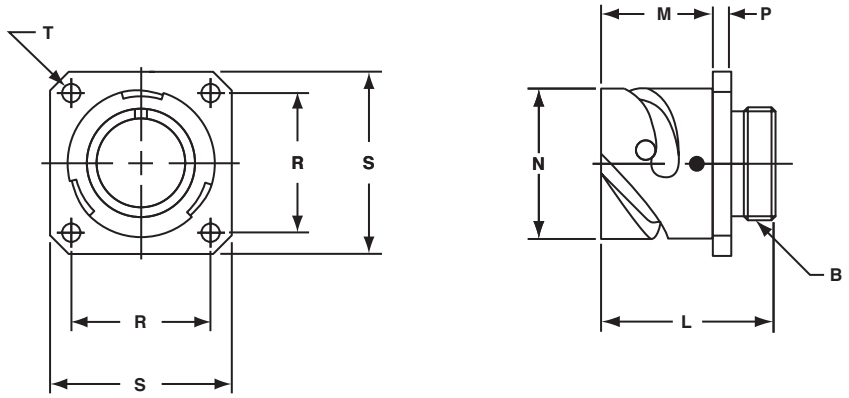

Table 1: Inches

Shell Size	B Thread Class 2A	L ± .012	M + .016 − .000	N + .000 − .006	P ± .008	R ± .004	S ± .012	T + .004 − .000
10SL	.6250-24UNEF	1.087	.717	.717	.110	.717	1.000	.126
14S	.7500-20UNEF	1.087	.717	.969	.126	.906	1.181	.126
16S	.8750-20UNEF	1.087	.717	1.079	.126	.969	1.280	.126
16	.8750-20UNEF	1.331	.846	1.079	.126	.969	1.280	.126
18	1.0000-20UNEF	1.331	.907	1.213	.157	1.063	1.378	.126
20	1.1250-18UNEF	1.331	.907	1.346	.157	1.157	1.496	.126
22	1.2500-18UNEF	1.331	.907	1.472	.157	1.252	1.614	.126
24	1.3750-18UNEF	1.406	.907	1.610	.157	1.374	1.752	.146
28	1.6250-18UNEF	1.406	.947	1.839	.157	1.563	2.000	.146
32	1.8750-16UN	1.469	.947	2.102	.157	1.752	2.244	.169
36	2.0625-16UN	1.469	.947	2.346	.157	1.937	2.500	.169
40	2.3125-16UN	1.469	.947	2.579	.157	2.185	2.752	.169

Table 2: Millimeters

Shell Size	L ± 0.3	M + 0.4 − 0.0	N + 0.00 − 0.15	P ± 0.2	R ± 0.1	S ± 0.3	T + 0.1 − 0.0
10SL	27.6	18.2	18.2	2.8	18.2	25.4	3.2
14S	27.6	18.2	24.6	3.2	23.0	30.0	3.2
16S	27.6	18.2	27.4	3.2	24.6	32.5	3.2
16	33.8	21.5	27.4	3.2	24.6	32.5	3.2
18	33.8	23.05	30.8	4.0	27.0	35.0	3.2
20	33.8	23.05	34.2	4.0	29.4	38.0	3.2
22	33.8	23.05	37.4	4.0	31.8	41.0	3.2
24	33.8	23.05	40.9	4.0	34.9	44.5	3.7
28	35.7	24.05	46.7	4.0	39.7	50.8	3.7
32	37.3	24.05	53.4	4.0	44.5	57.0	4.3
36	37.3	24.05	59.6	4.0	49.2	63.5	4.3
40	37.3	24.05	65.5	4.0	55.5	69.9	4.3

All dimensions for reference only.

GT030A

square flange receptacle for rear panel mounting

- **Four through mounting holes or optional threaded holes**
- **Backshell included for accessory attachment**
- **Without a wire sealing grommet and cable clamp**
- **Non-environment proof**

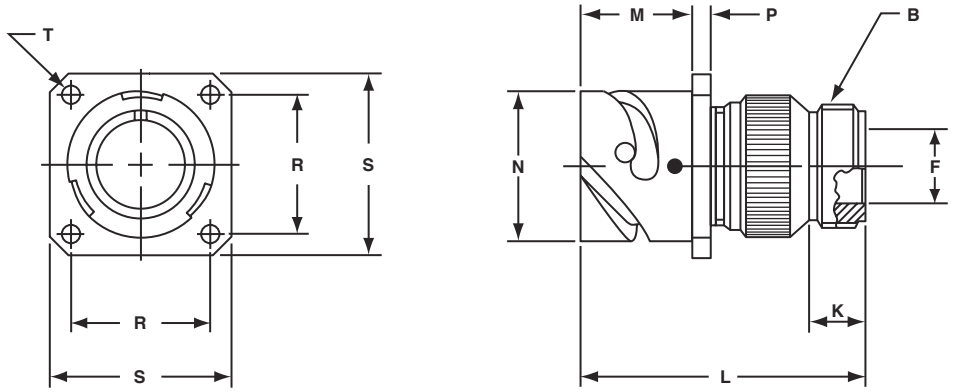

Inches

Shell Size	B Thread Class 2A	F Min.	K Min.	L Max.	M + .016 − .000	N + .000 − .006	P ± .008	R ± .004	S ± .012	T + .004 − .000
10SL	.6250-24 UNEF	.409	.374	1.969	.717	.717	.110	.717	1.000	.126
14S	.7500-20 UNEF	.520	.374	1.969	.717	.969	.126	.906	1.181	.126
16S	.8750-20 UNEF	.638	.374	1.969	.717	1.079	.126	.969	1.280	.126
16	.8750-20 UNEF	.638	.374	2.362	.846	1.079	.126	.969	1.280	.126
18	1.0000-20 UNEF	.756	.374	2.362	.907	1.213	.157	1.063	1.378	.126
20	1.1875-18 UNEF	.867	.374	2.362	.907	1.346	.157	1.157	1.496	.126
22	1.1875-18 UNEF	.965	.374	2.362	.907	1.472	.157	1.252	1.614	.126
24	1.4375-18 UNEF	1.094	.374	2.560	.907	1.610	.157	1.374	1.752	.146
28	1.4375-18 UNEF	1.228	.374	2.560	.947	1.839	.157	1.563	2.000	.146
32	1.7500-18 UNS	1.488	.433	2.560	.947	2.102	.157	1.752	2.244	.169
36	2.0000-18 UNS	1.780	.465	3.150	.947	2.346	.157	1.937	2.500	.169
40	2.2500-16 UN	2.016	.465	3.150	.947	2.579	.157	2.185	2.752	.169

Millimeters

Shell Size	F Min.	K Min.	L Max.	M + 0.4 − 0.0	N + 0.00 − 0.15	P ± 0.2	R ± 0.1	S ± 0.3	T + 0.1 − 0.0
10SL	10.4	9.5	50	18.20	18.2	2.8	18.2	25.4	3.2
14S	13.2	9.5	50	18.20	24.6	3.2	23.0	30.0	3.2
16S	16.2	9.5	50	18.20	27.4	3.2	24.6	32.5	3.2
16	16.2	9.5	60	21.50	27.4	3.2	24.6	32.5	3.2
18	19.2	9.5	60	23.05	30.8	4.0	27.0	35.0	3.2
20	22.0	9.5	60	23.05	34.2	4.0	29.4	38.0	3.2
22	24.5	9.5	60	23.05	37.4	4.0	31.8	41.0	3.2
24	27.8	9.5	65	23.05	40.9	4.0	34.9	44.5	3.7
28	31.2	9.5	65	24.05	46.7	4.0	39.7	50.8	3.7
32	37.8	11.0	65	24.05	53.4	4.0	44.5	57.0	4.3
36	45.2	11.8	80	24.05	59.6	4.0	49.2	63.5	4.3
40	51.2	11.8	80	24.05	65.5	4.0	55.5	69.9	4.3

All dimensions for reference only.

GT030AF/030F

square flange receptacle for rear panel mounting

GT030AF
- **Includes a cable clamp**
- **Wire sealing grommet not included**
- **Non-environment proof**
- **Four through mounting holes or optional threaded holes**

GT030F
- **Includes a wire sealing grommet and cable clamp**
- **For use with individual wires**
- **Environment proof**
- **Four through mounting holes or optional threaded holes**

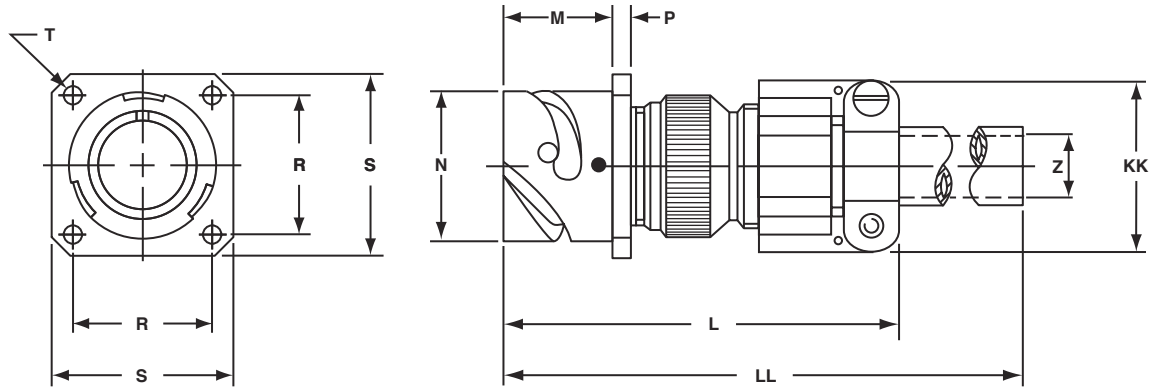

Inches

Shell Size	L Max.	M + .016 – .000	N + .000 – .006	P ± .008	R ± .004	S ± .012	T + .004 – .000	Z Nominal	KK Max.	LL Max.
10SL	2.362	.717	.717	.110	.717	1.000	.126	.220	.894	4.720
14S	2.440	.717	.969	.126	.906	1.181	.126	.312	1.083	4.720
16S	2.756	.717	1.079	.126	.969	1.280	.126	.437	1.181	4.720
16	2.756	.846	1.079	.126	.969	1.280	.126	.437	1.181	4.921
18	3.031	.907	1.213	.157	1.063	1.378	.126	.562	1.300	4.921
20	3.031	.907	1.346	.157	1.157	1.496	.126	.625	1.476	4.921
22	3.031	.907	1.472	.157	1.252	1.614	.126	.625	1.476	4.921
24	3.346	.907	1.610	.157	1.374	1.752	.146	.750	1.705	4.921
28	3.346	.947	1.839	.157	1.563	2.000	.146	.750	1.705	4.921
32	3.346	.947	2.102	.157	1.752	2.244	.169	.937	2.035	4.921
36	4.134	.947	2.346	.157	1.937	2.500	.169	1.250	2.283	5.315
40	5.118	.947	2.579	.157	2.185	2.752	.169	1.375	2.579	5.709

Millimeters

Shell Size	L Max.	M + 0.4 – 0.0	N + 0.00 – 0.15	P ± 0.2	R ± 0.1	S ± 0.3	T + 0.1 – 0.0	Z Nominal	KK Max.	LL Max.
10SL	60	18.20	18.2	2.8	18.2	25.4	3.2	5.58	22.7	120
14S	62	18.20	24.6	3.2	23.0	30.0	3.2	7.92	27.5	120
16S	70	18.20	27.4	3.2	24.6	32.5	3.2	11.09	30.0	120
16	70	21.50	27.4	3.2	24.6	32.5	3.2	11.09	30.0	125
18	77	23.05	30.8	4.0	27.0	35.0	3.2	14.27	33.0	125
20	77	23.05	34.2	4.0	29.4	38.0	3.2	15.87	37.5	125
22	77	23.05	37.4	4.0	31.8	41.0	3.2	15.87	37.5	125
24	85	23.05	40.9	4.0	34.9	44.5	3.7	19.05	43.3	125
28	85	24.05	46.7	4.0	39.7	50.8	3.7	19.05	43.3	125
32	85	24.05	53.4	4.0	44.5	57.0	4.3	23.79	51.7	125
36	105	24.05	59.6	4.0	49.2	63.5	4.3	31.75	58.0	135
40	130	24.05	65.5	4.0	55.5	69.9	4.3	34.92	65.5	145

All dimensions for reference only.

GT030G

square flange receptacle for rear panel mounting

- **Four through mounting holes or optional threaded holes**
- **With wire sealing grommet for individual wires**
- **Includes backshell for use with heat-shrink tubing**
- **Environment proof**

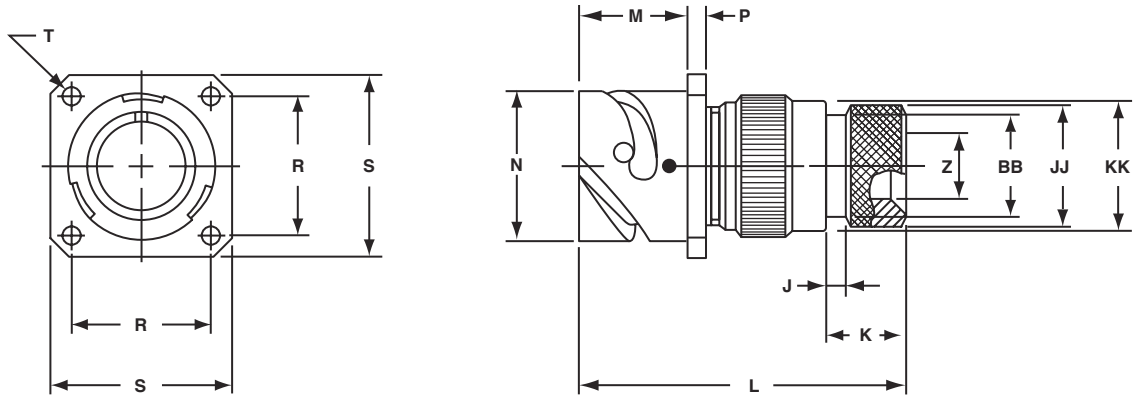

Inches

Shell Size	J ± .008	K ± .020	L Max.	M + .016 − .000	N + .000 − .006	P ± .008	R ± .004	S ± .012	T + .004 − .000	Z Min.	BB Max.	JJ ± .008	KK ± .008
10SL	.138	.461	1.969	.717	.717	.110	.717	1.000	.126	.303	.524	.610	.669
14S	.138	.461	1.969	.717	.969	.126	.906	1.181	.126	.417	.669	.752	.791
16S	.138	.461	1.969	.717	1.079	.126	.969	1.280	.126	.531	.862	.941	.925
16	.138	.453	2.362	.846	1.079	.126	.969	1.280	.126	.531	.862	.941	.925
18	.138	.453	2.362	.907	1.213	.157	1.063	1.378	.126	.575	.862	.941	1.043
20	.138	.500	2.559	.907	1.346	.157	1.157	1.496	.126	.736	1.031	1.165	1.189
22	.138	.500	2.559	.907	1.472	.157	1.252	1.614	.126	.819	1.031	1.165	1.323
24	.138	.500	2.559	.907	1.610	.157	1.374	1.752	.146	.969	1.358	1.488	1.421
28	.138	.500	2.559	.947	1.839	.157	1.563	2.000	.146	1.063	1.358	1.488	1.630
32	.138	.598	2.756	.947	2.102	.157	1.752	2.244	.169	1.311	1.717	1.882	1.913
36	.138	.598	3.150	.947	2.346	.157	1.937	2.500	.169	1.516	1.717	1.882	2.157
40	.138	.610	3.150	.947	2.579	1.57	2.185	2.752	.169	1.898	2.071	2.276	2.402

Millimeters

Shell Size	J ± 0.2	K ± 0.5	L Max.	M + 0.4 − 0.0	N + 0.00 − 0.15	P ± 0.2	R ± 0.1	S ± 0.3	T + 0.1 − 0.0	Z Min.	B Max.	JJ ± 0.2	KK ± 0.2
10SL	3.5	11.7	50	18.20	18.2	2.8	18.2	25.4	3.2	7.7	13.3	15.5	17.0
14S	3.5	11.7	50	18.20	24.6	3.2	23.0	30.0	3.2	10.6	17.0	19.1	20.1
16S	3.5	11.7	50	18.20	27.4	3.2	24.6	32.5	3.2	13.5	21.9	23.9	23.5
16	3.5	11.5	60	21.50	27.4	3.2	24.6	32.5	3.2	13.5	21.9	23.9	23.5
18	3.5	11.5	60	23.05	30.8	4.0	27.0	35.0	3.2	14.6	21.9	23.9	26.5
20	3.5	12.7	65	23.05	34.2	4.0	29.4	38.0	3.2	18.7	26.2	29.6	30.2
22	3.5	12.7	65	23.05	37.4	4.0	31.8	41.0	3.2	20.8	26.2	29.6	33.6
24	3.5	12.7	65	23.05	40.9	4.0	34.9	44.5	3.7	24.6	34.5	37.8	36.1
28	3.5	12.7	65	24.05	46.7	4.0	39.7	50.8	3.7	27.0	34.5	37.8	41.4
32	3.5	15.2	70	24.05	53.4	4.0	44.5	57.0	4.3	33.3	43.6	47.8	48.6
36	3.5	15.2	80	24.05	59.6	4.0	49.2	63.5	4.3	38.5	43.6	47.8	54.8
40	3.5	15.5	80	24.05	65.5	4.0	55.5	69.9	4.3	48.2	52.6	57.8	61.0

All dimensions for reference only.

GT030R

square flange receptacle for rear panel mounting

- **Four through mounting holes or optional threaded holes**
- **With a wire sealing grommet for individual wires**
- **Includes backshell for conduit termination**
- **Environment proof**

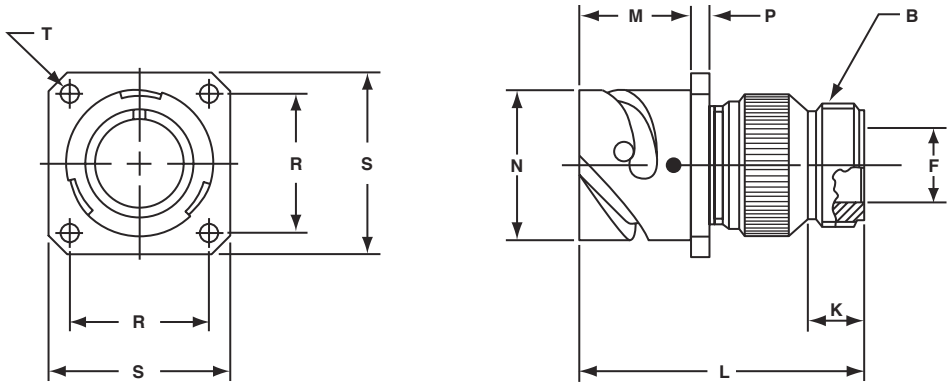

Inches

Shell Size	B Thread Class 2A	F Min.	K Min.	L Max.	M + .016 – .000	N + .000 – .006	P ± .008	R ± .004	S ± .012	T + .004 – .000
10SL	.6250-24 UNEF	.409	.374	1.969	.717	.717	.110	.717	1.000	.126
14S	.7500-20 UNEF	.520	.374	1.969	.717	.969	.126	.906	1.181	.126
16S	.8750-20 UNEF	.638	.374	1.969	.717	1.079	.126	.969	1.280	.126
16	.8750-20 UNEF	.638	.374	2.362	.846	1.079	.126	.969	1.280	.126
18	1.0000-20 UNEF	.756	.374	2.362	.907	1.213	.157	1.063	1.378	.126
20	1.1875-18 UNEF	.867	.374	2.362	.907	1.346	.157	1.157	1.496	.126
22	1.1875-18 UNEF	.965	.374	2.362	.907	1.472	.157	1.252	1.614	.126
24	1.4375-18 UNEF	1.094	.374	2.560	.907	1.610	.157	1.374	1.752	.146
28	1.4375-18 UNEF	1.228	.374	2.560	.947	1.839	.157	1.563	2.000	.146
32	1.7500-18 UNS	1.488	.433	2.560	.947	2.102	.157	1.752	2.244	.169
36	2.0000-18 UNS	1.780	.465	3.150	.947	2.346	.157	1.937	2.500	.169
40	2.2500-16 UN	2.016	.465	3.150	.947	2.579	.157	2.185	2.752	.169

Millimeters

Shell Size	F Min.	K Min.	L Max.	M + 0.4 – 0.0	N + 0.00 – 0.15	P ± 0.2	R ± 0.1	S ± 0.3	T + 0.1 – 0.0
10SL	10.4	9.5	50	18.20	18.2	2.8	18.2	25.4	3.2
14S	13.2	9.5	50	18.20	24.6	3.2	23.0	30.0	3.2
16S	16.2	9.5	50	18.20	27.4	3.2	24.6	32.5	3.2
16	16.2	9.5	60	21.50	27.4	3.2	24.6	32.5	3.2
18	19.2	9.5	60	23.05	30.8	4.0	27.0	35.0	3.2
20	22.0	9.5	60	23.05	34.2	4.0	29.4	38.0	3.2
22	24.5	9.5	60	23.05	37.4	4.0	31.8	41.0	3.2
24	27.8	9.5	65	23.05	40.9	4.0	34.9	44.5	3.7
28	31.2	9.5	65	24.05	46.7	4.0	39.7	50.8	3.7
32	37.8	11.0	65	24.05	53.4	4.0	44.5	57.0	4.3
36	45.2	11.8	80	24.05	59.6	4.0	49.2	63.5	4.3
40	51.2	11.8	80	24.05	65.5	4.0	55.5	69.9	4.3

All dimensions for reference only.

GT030RV

square flange receptacle for rear panel mounting

- **Four through mounting holes or optional threaded holes**
- **With wire sealing grommet for individual wires**
- **Environment proof**

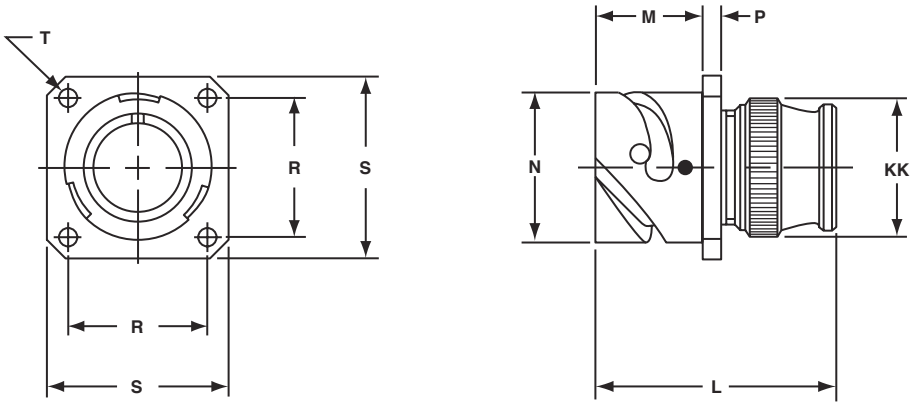

Inches

Shell Size	L Max.	M + .016 − .000	N + .000 − .006	P ± .008	R ± .004	S ± .012	T + .004 − .000	KK Max.
10SL	1.890	.717	.717	.110	.717	1.000	.126	.787
14S	1.890	.717	.969	.126	.906	1.181	.126	.945
16S	1.890	.717	1.079	.126	.969	1.280	.126	1.024
16	2.205	.846	1.079	.126	.969	1.280	.126	1.024
18	2.244	.907	1.213	.157	1.063	1.378	.126	1.161
20	2.244	.907	1.346	.157	1.157	1.496	.126	1.299
22	2.244	.907	1.472	.157	1.252	1.614	.126	1.417
24	2.244	.907	1.610	.157	1.374	1.752	.146	1.575
28	2.244	.947	1.839	.157	1.563	2.000	.146	1.811
32	2.362	.947	2.102	.157	1.752	2.244	.169	2.028
36	2.362	.947	2.346	.157	1.937	2.500	.169	2.283
40	2.362	.947	2.579	.157	2.185	2.752	.169	2.539

Millimeters

Shell Size	L Max.	M + 0.4 − 0.0	N + 0.00 − 0.15	P ± 0.2	R ± 0.1	S ± 0.3	T + 0.1 − 0.0	KK Max.
10SL	48.0	18.20	18.2	2.8	18.2	25.4	3.2	20.0
14S	48.0	18.20	24.6	3.2	23.0	30.0	3.2	24.0
16S	48.0	18.20	27.4	3.2	24.6	32.5	3.2	26.0
16	56.0	21.50	27.4	3.2	24.6	32.5	3.2	26.0
18	57.0	23.05	30.8	4.0	27.0	35.0	3.2	29.5
20	57.0	23.05	34.2	4.0	29.4	38.0	3.2	33.0
22	57.0	23.05	37.4	4.0	31.8	41.0	3.2	36.0
24	57.0	23.05	40.9	4.0	34.9	44.5	3.7	40.0
28	57.0	24.05	46.7	4.0	39.7	50.8	3.7	46.0
32	60.0	24.05	53.4	4.0	44.5	57.0	4.3	51.5
36	60.0	24.05	59.6	4.0	49.2	63.5	4.3	58.0
40	60.0	24.05	65.5	4.0	55.5	69.9	4.3	64.5

All dimensions for reference only.

GT06A
straight plug

- **Without grommet and cable clamp**
- **If a cable clamp is required, see pages 84 and 86**
- **Non-environment**

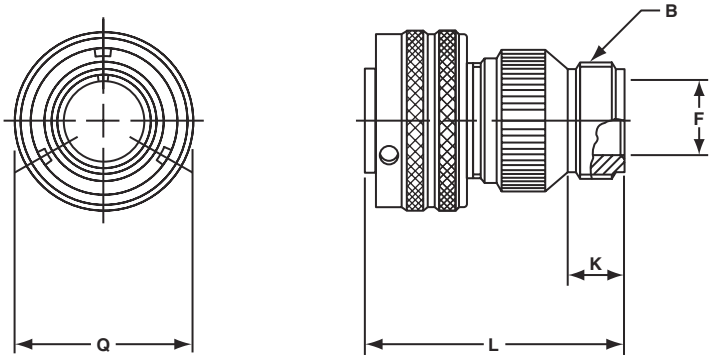

Inches

Shell Size	B Thread Class 2A	F Min.	K Min.	L Max.	Q Max.
10SL	.6250-24UNEF	.409	.374	1.969	.898
14S	.7500-20UNEF	.520	.374	1.969	1.150
16S	.8750-20UNEF	.638	.374	1.969	1.260
16	.8750-20UNEF	.638	.374	2.362	1.260
18	1.0000-20UNEF	.756	.374	2.362	1.437
20	1.1875-18UNEF	.867	.374	2.362	1.571
22	1.1875-18UNEF	.965	.374	2.362	1.697
24	1.4375-18UNEF	1.094	.374	2.560	1.835
28	1.4375-18UNEF	1.228	.374	2.560	2.102
32	1.7500-18UNS	1.488	.433	2.560	2.366
36	2.0000-18UNS	1.780	.465	3.150	2.610
40	2.2500-16UN	2.016	.465	3.150	2.850

Millimeters

Shell Size	F Min.	K Min.	L Max.	Q Max.
10SL	10.4	9.5	50	22.8
14S	13.2	9.5	50	29.2
16S	16.2	9.5	50	32.0
16	16.2	9.5	60	32.0
18	19.2	9.5	60	36.5
20	22.0	9.5	60	39.9
22	24.5	9.5	60	43.1
24	27.8	9.5	65	46.6
28	31.2	9.5	65	53.4
32	37.8	11.0	65	60.1
36	45.2	11.8	80	66.3
40	51.2	11.8	80	72.4

All dimensions for reference only.

GT06AF/06F
straight plug

GT06AF
- **With a cable clamp**
- **Wire sealing grommet not supplied**
- **Non-environment proof**

GT06F
- **With a wire sealing grommet and cable clamp**
- **For use with individual wires**
- **Environment proof**

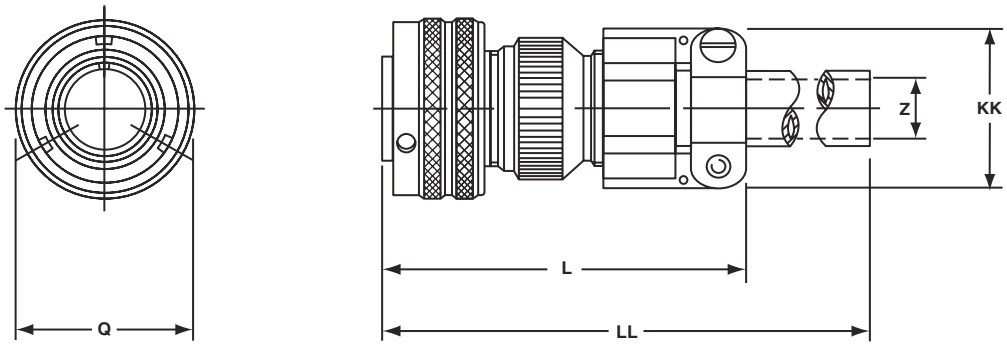

Inches

Shell Size	L Max.	Q Max.	Z Nominal	KK Max.	LL Max.
10SL	2.165	.898	.220	.894	4.724
14S	2.362	1.150	.312	1.083	4.724
16S	2.756	1.260	.437	1.181	4.724
16	2.756	1.260	.437	1.181	4.921
18	2.953	1.437	.562	1.299	4.921
20	2.953	1.571	.625	1.476	4.921
22	2.953	1.697	.625	1.476	4.921
24	3.543	1.835	.750	1.705	4.921
28	3.543	2.102	.750	1.705	4.921
32	3.543	2.366	.937	2.035	4.921
36	3.937	2.610	1.250	2.283	5.315
40	4.921	2.850	1.375	2.579	5.709

Millimeters

Shell Size	L Max.	Q Max.	Z Nominal	KK Max.	LL Max.
10SL	55	22.8	5.58	22.7	120
14S	60	29.2	7.92	27.5	120
16S	70	32.0	11.09	30.0	120
16	70	32.0	11.09	30.0	125
18	75	36.5	14.27	33.0	125
20	75	39.9	15.87	37.5	125
22	75	43.1	15.87	37.5	125
24	90	46.6	19.05	43.3	125
28	90	53.4	19.05	43.3	125
32	90	60.1	23.79	51.7	125
36	100	66.3	31.75	58.0	135
40	125	72.4	34.92	65.5	145

All dimensions for reference only.

GT06CF
straight plug

- **With a cable clamp and seal**
- **For use with jacketed cable**
- **Environment proof**

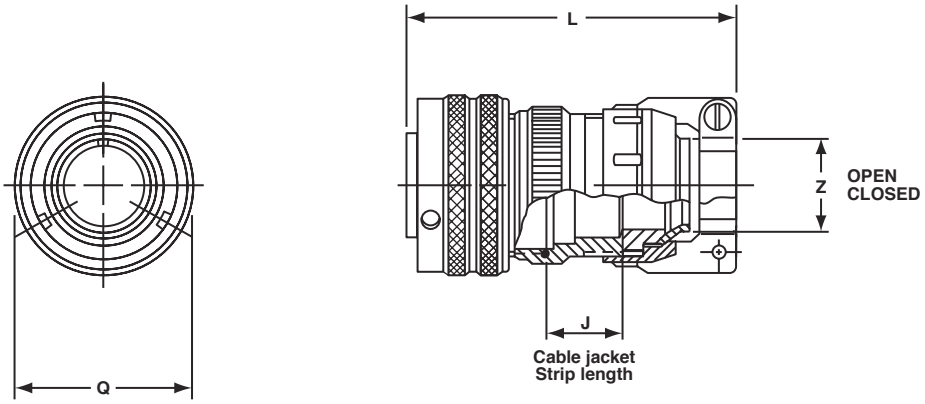

Inches

Shell Size	J Approx.	L Approx.	Q Max.	Z	
				Open	Closed
10SL	.551	2.752	.898	.312	.094
14S	.732	2.898	1.150	.438	.230
16S	.732	2.898	1.260	.531	.315
16	.653	3.216	1.260	.531	.315
18	.705	3.307	1.437	.625	.378
20	.705	3.311	1.571	.748	.445
22	.744	3.350	1.697	.748	.445
24	.689	3.484	1.835	.937	.610
28	.921	3.736	2.102	.937	.610
32	1.016	4.142	2.366	1.250	.921
36	1.031	4.390	2.610	1.378	.921
40	1.614	4.640	2.854	1.624	1.177

Millimeters

Shell Size	J Approx.	L Approx.	Q Max.	Z	
				Open	Closed
10SL	14.0	69.6	22.8	7.93	2.38
14S	18.6	73.6	29.2	11.12	5.84
16S	18.6	73.6	32.0	13.48	8.00
16	16.6	81.7	32.0	13.48	8.00
18	17.9	84.0	36.5	15.87	9.60
20	17.9	84.1	39.9	19.00	11.30
22	18.9	85.1	43.1	19.00	11.30
24	17.5	88.5	46.6	23.80	15.50
28	23.4	94.9	53.4	23.80	15.50
32	25.8	105.2	60.1	31.75	23.40
36	26.2	111.5	66.3	35.00	23.40
40	41.0	111.5	72.5	41.25	29.90

All dimensions for reference only.

GT06G
straight plug

- **With a wire sealing grommet**
- **For use with individual wires**
- **Includes a backshell for use with heat-shrink tubing**
- **Environment proof**

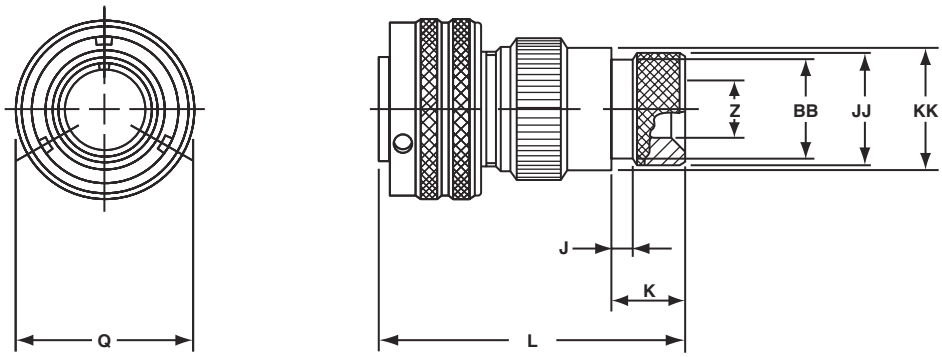

Inches

Shell Size	J ± .008	K ± .020	L Max.	Q Max.	Z Min.	BB Max.	JJ ± .008	KK ± .008
10SL	.138	.461	1.969	.898	.303	.524	.610	.669
14S	.138	.461	1.969	1.150	.417	.669	.752	.791
16S	.138	.461	1.969	1.260	.531	.862	.941	.925
16	.138	.453	2.362	1.260	.531	.862	.941	.925
18	.138	.453	2.362	1.437	.575	.862	.941	1.043
20	.138	.500	2.559	1.571	.736	1.031	1.165	1.189
22	.138	.500	2.559	1.697	.819	1.031	1.165	1.323
24	.138	.500	2.559	1.835	.969	1.358	1.488	1.421
28	.138	.500	2.559	2.102	1.063	1.358	1.488	1.630
32	.138	.598	2.756	2.366	1.311	1.717	1.882	1.913
36	.138	.598	3.150	2.610	1.516	1.717	1.882	2.157
40	.138	.610	3.150	2.854	1.898	2.071	2.276	2.402

Millimeters

Shell Size	J ± 0.2	K ± 0.5	L Max.	Q Max.	Z Min.	BB Max.	JJ ± 0.2	KK ± 0.2
10SL	3.5	11.7	50	22.8	7.7	13.3	15.5	17.0
14S	3.5	11.7	50	29.2	10.6	17.0	19.1	20.1
16S	3.5	11.7	50	32.0	13.5	21.9	23.9	23.5
16	3.5	11.5	60	32.0	13.5	21.9	23.9	23.5
18	3.5	11.5	60	36.5	14.6	21.9	23.9	26.5
20	3.5	12.7	65	39.9	18.7	26.2	29.6	30.2
22	3.5	12.7	65	43.1	20.8	26.2	29.6	33.6
24	3.5	12.7	65	46.6	24.6	34.5	37.8	36.1
28	3.5	12.7	65	53.4	27.0	34.5	37.8	41.4
32	3.5	15.2	70	60.1	33.3	43.6	47.8	48.6
36	3.5	15.2	80	66.3	38.5	43.6	47.8	54.8
40	3.5	15.2	80	72.5	48.2	52.6	57.8	61.0

All dimensions for reference only.

GT06AMI/GT06RMI
straight plug

AMI
- **Long adapter with internal PG/Metric thread***
- **Wire sealing grommet not supplied**
- **Non-environmental**

RMI
- **Long adapter with internal PG/Metric thread***
- **With wire sealing grommet**
- **Environment proof**

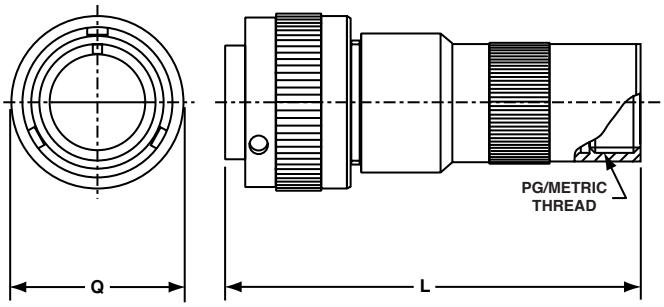

Inches

Shell Size	L Ref.	Q Max.
10SL	2.873	.898
14S	2.904	1.150
16S	2.904	1.299
16	3.291	1.299
18	3.406	1.437
20	3.391	1.571
22	3.395	1.697
24	3.470	1.835
28	3.604	2.102
32	3.751	2.366
36	3.795	2.610
40	3.795	2.850

Millimeters

Shell Size	L Ref.	Q Max.
10SL	73.0	22.8
14S	73.8	29.2
16S	73.8	32.0
16	83.6	32.0
18	86.5	36.5
20	86.1	39.9
22	86.2	43.1
24	88.1	46.6
28	91.5	53.4
32	95.3	60.1
36	96.4	66.3
40	96.4	72.5

All dimensions for reference only.
*Refer to page 87

GT06R
straight plug

- **With a wire sealing grommet**
- **Includes a backshell for conduit termination**
- **Environment proof**

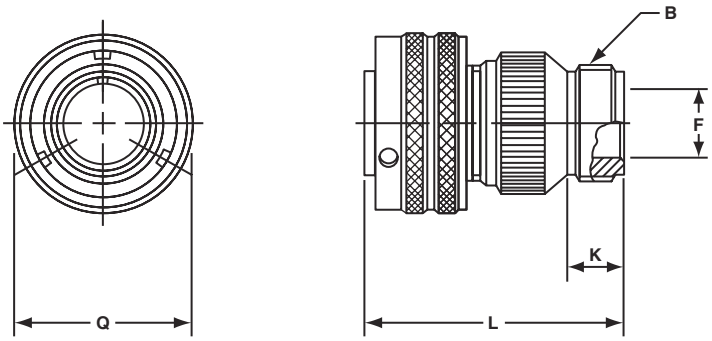

Inches

Shell Size	B Thread Class 2A	F Min.	K Min.	L Max.	Q Max.
10SL	.6250-24UNEF	.409	.374	1.969	.898
14S	.7500-20UNEF	.520	.374	1.969	1.150
16S	.8750-20UNEF	.638	.374	1.969	1.260
16	.8750-20UNEF	.638	.374	2.362	1.260
18	1.0000-20UNEF	.756	.374	2.362	1.437
20	1.1875-18UNEF	.867	.374	2.362	1.571
22	1.1875-18UNEF	.965	.374	2.362	1.697
24	1.4375-18UNEF	1.094	.374	2.560	1.835
28	1.4375-18UNEF	1.228	.374	2.560	2.102
32	1.7500-18UNS	1.488	.433	2.560	2.366
36	2.0000-18UNS	1.780	.465	3.150	2.610
40	2.2500-16UN	2.016	.465	3.150	2.850

Millimeters

Shell Size	F Min.	K Min.	L Max.	Q Max.
10SL	10.4	9.5	50	22.8
14S	13.2	9.5	50	29.2
16S	16.2	9.5	50	32.0
16	16.2	9.5	60	32.0
18	19.2	9.5	60	36.5
20	22.0	9.5	60	39.9
22	24.5	9.5	60	43.1
24	27.8	9.5	65	46.6
28	31.2	9.5	65	53.4
32	37.8	11.0	65	60.1
36	45.2	11.8	80	66.3
40	51.2	11.8	80	72.4

All dimensions for reference only.

GT06RV
straight plug

- **With a wire sealing grommet**
- **For use with individual wires**
- **Environment proof**

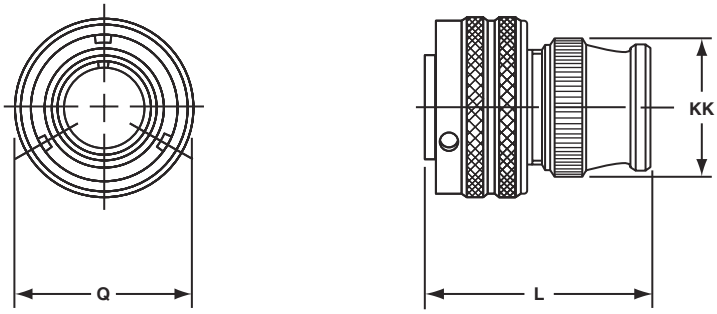

Inches

Shell Size	L Max.	Q Max.	KK Max.
10SL	1.417	.898	.787
14S	1.437	1.150	.945
16S	1.437	1.260	1.024
16	1.929	1.260	1.024
18	1.929	1.437	1.161
20	1.969	1.571	1.299
22	1.969	1.697	1.417
24	2.008	1.835	1.543
28	2.008	2.102	1.811
32	2.087	2.366	2.028
36	2.106	2.610	2.283
40	2.126	2.850	2.539

Millimeters

Shell Size	L Max.	Q Max.	KK Max.
10SL	36.0	22.8	20.0
14S	36.5	29.2	24.0
16S	36.5	32.0	26.0
16	49.0	32.0	26.0
18	49.0	36.5	29.5
20	50.0	39.9	33.0
22	50.0	43.1	36.0
24	51.0	46.6	40.0
28	51.0	53.4	46.0
32	53.0	60.1	51.5
36	53.5	66.3	58.0
40	54.0	72.4	64.5

All dimensions for reference only.

GT06SB
straight plug

- **For termination of shielded braid and heatshrink tube or boot.**
- **With individual wire sealing grommet**
- **Environment proof**

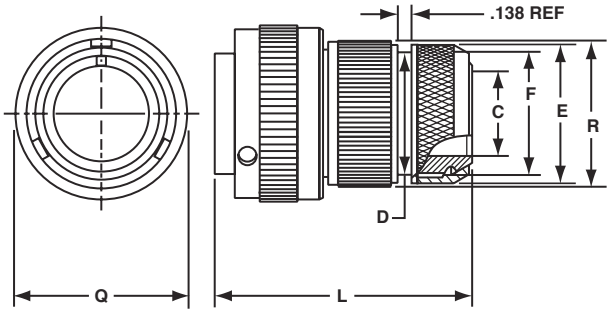

Inches

Shell Size	C Min.	D Max.	E Max.	F Ref.	L Ref.	Q Max.	R Max.
10SL	.303	.641	.775	.625	2.034	.898	.786
14S	.417	.786	.873	.750	2.049	1.150	.944
16S	.531	.905	1.025	.875	2.049	1.299	1.023
16	.531	.905	1.025	.875	2.505	1.299	1.023
18	.637	.965	1.147	1.000	2.552	1.437	1.160
20	.736	1.122	1.305	1.125	2.552	1.571	1.296
22	.819	1.196	1.373	1.250	2.418	1.697	1.416
24	.981	1.364	1.521	1.375	2.632	1.835	1.562
28	1.067	1.476	1.657	1.500	2.566	2.102	1.806
32	1.311	1.732	1.927	1.750	2.628	2.366	2.027
36	1.631	2.007	2.207	2.062	2.676	2.610	2.281
40	1.882	2.283	2.486	2.312	2.628	2.850	2.538

Millimeters

Shell Size	C Min.	D Max.	E Max.	F Ref.	L Ref.	Q Max.	R Max.
10SL	7.7	16.3	19.7	15.9	51.7	22.8	20.0
14S	10.6	20.0	22.2	19.1	52.0	29.2	24.0
16S	13.5	23.0	26.0	22.2	52.0	32.0	26.0
16	13.5	23.0	26.0	22.2	63.6	32.0	26.0
18	16.2	24.5	29.1	25.4	64.8	36.5	29.5
20	18.7	28.5	33.1	28.6	64.8	39.9	32.9
22	20.8	30.4	34.9	31.8	61.4	43.1	36.0
24	24.9	34.6	38.6	34.9	66.8	46.6	39.7
28	27.1	37.5	42.5	38.1	65.2	53.4	45.9
32	33.3	44.0	48.9	44.5	66.8	60.1	51.5
36	41.4	51.0	56.1	52.4	68.0	66.3	57.9
40	47.8	58.0	63.1	58.7	66.8	72.5	64.5

All dimensions for reference only.

GT07R
jam nut receptacle

- **For rear panel single hole mounting**
- **Panel seal O-ring included**
- **Environment proof**

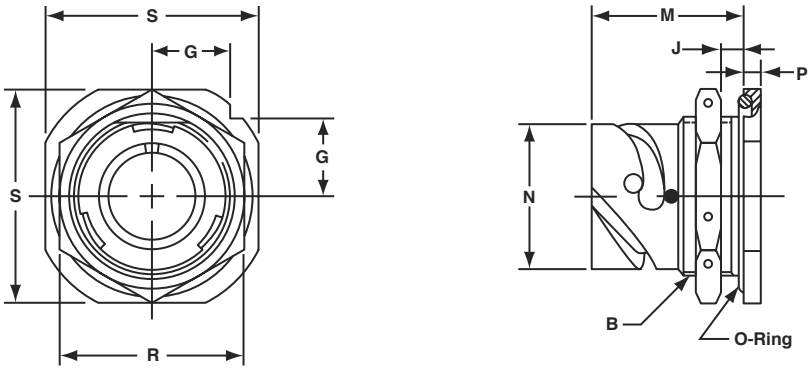

Inches

Shell Size	B Thread Class 2A	G ± .012	J Wall Thickness Min.	J Wall Thickness Max.	M ± .012	N + .000 − .006	P ± .007	R ± .016	S ± .012
10SL	.8750-20 UNEF	.441	.094	.205	.965	.717	.157	1.062	1.252
14S	1.1250-18 UNEF	.575	.094	.295	1.055	.969	.189	1.312	1.626
16S	1.2500-18 UNEF	.618	.094	.295	1.055	1.079	.189	1.500	1.748
16	1.2500-18 UNEF	.618	.094	.295	1.264	1.079	.189	1.500	1.748
18	1.3750-18 UNEF	.661	.094	.354	1.327	1.213	.189	1.562	1.875
20	1.5000-18 UNEF	.709	.094	.358	1.327	1.346	.189	1.750	2.000
22	1.6250-18 UNEF	.795	.094	.358	1.327	1.472	.189	2.000	2.134
24	1.7500-18 UNEF	.795	.094	.358	1.327	1.610	.189	2.000	2.252
28	2.0000-18 UNS	.886	.094	.394	1.386	1.839	.220	2.188	2.500
32	2.2500-16 UN	.972	.094	.394	1.386	2.102	.220	2.438	2.748
36	2.5000-16 UN	1.059	.094	.327	1.386	2.346	.220	2.812	3.000
40	2.7500-16 UN	1.165	.094	.327	1.386	2.579	.220	2.953	3.248

Millimeters

Shell Size	G ± 0.3	J Wall Thickness Min.	J Wall Thickness Max.	M ± 0.3	N + 0.00 − 0.15	P ± 0.2	R ± 0.4	S ± 0.3
10SL	11.2	2.4	5.2	24.5	18.2	4.0	27	31.8
14S	14.6	2.4	7.5	26.8	24.6	4.8	33	41.3
16S	15.7	2.4	7.5	26.8	27.4	4.8	38	44.4
16	15.7	2.4	7.5	32.1	27.4	4.8	38	44.4
18	16.8	2.4	9.0	33.7	30.8	4.8	40	47.6
20	18.0	2.4	9.1	33.7	34.2	4.8	44	50.8
22	20.2	2.4	9.1	33.7	37.4	4.8	51	54.2
24	20.2	2.4	9.1	33.7	40.9	4.8	51	57.2
28	22.5	2.4	10.0	35.2	46.7	5.6	56	63.5
32	24.7	2.4	10.0	35.2	53.4	5.6	62	69.8
36	26.9	2.4	8.3	35.2	59.6	5.6	71	76.2
40	29.6	2.4	8.3	35.2	65.5	5.6	75	82.5

All dimensions for reference only.

GT070
jam nut receptacle

- **For rear panel single hole mounting**
- **Threaded rear for accessories**
- **Environment proof**

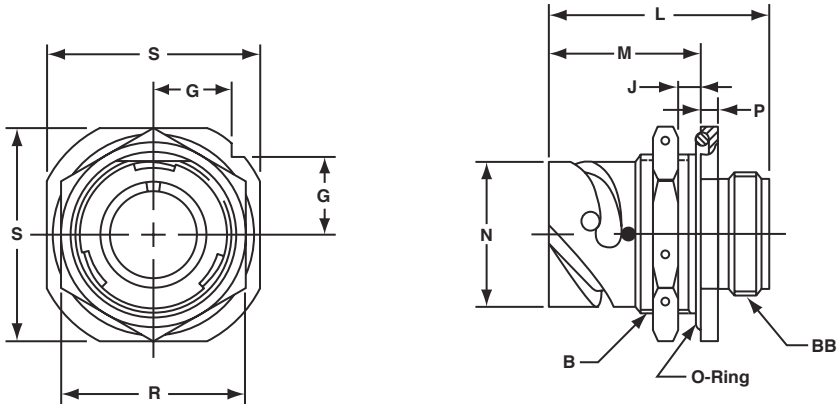

Inches

Shell Size	B Thread Class 2A	G ± .012	J Wall Thickness Min.	J Wall Thickness Max.	L ± .010	M ± .012	N + .000 − .006	P ± .007	R ± .016	S ± .012	BB Thread Class 2A
10SL	.8750-20 UNEF	.441	.094	.205	1.425	.965	.717	.157	1.062	1.252	.6250-24 UNEF
14S	1.1250-18 UNEF	.575	.094	.295	1.531	1.055	.969	.189	1.312	1.626	.7500-20 UNEF
16S	1.2500-18 UNEF	.618	.094	.295	1.531	1.055	1.079	.189	1.500	1.748	.8750-20 UNEF
16	1.2500-18 UNEF	.618	.094	.295	1.909	1.264	1.079	.189	1.500	1.748	.8750-20 UNEF
18	1.3750-18 UNEF	.661	.094	.354	1.941	1.327	1.213	.189	1.562	1.875	1.0000-20 UNEF
20	1.5000-18 UNEF	.709	.094	.358	1.941	1.327	1.346	.189	1.750	2.000	1.1250-18 UNEF
22	1.6250-18 UNEF	.795	.094	.358	1.941	1.327	1.472	.189	2.000	2.134	1.2500-18 UNEF
24	1.7500-18 UNEF	.795	.094	.358	1.953	1.327	1.610	.189	2.000	2.252	1.3750-18 UNEF
28	2.0000-18 UNS	.886	.094	.394	2.043	1.386	1.839	.220	2.188	2.500	1.6250-18 UNEF
32	2.2500-16 UN	.972	.094	.394	2.043	1.386	2.102	.220	2.438	2.748	1.8750-16 UN
36	2.5000-16 UN	1.059	.094	.327	2.043	1.386	2.346	.220	2.812	3.000	2.0625-16 UN
40	2.7500-16 UN	1.165	.094	.327	2.043	1.386	2.579	.220	2.953	3.248	2.3125-16 UN

Millimeters

Shell Size	G ± 0.3	J Wall Thickness Min.	J Wall Thickness Max.	L ± 0.3	M ± 0.3	N + 0.00 − 0.15	P ± 0.2	R ± 0.4	S ± 0.3
10SL	11.2	2.4	5.2	36.2	24.5	18.2	4.0	27	31.8
14S	14.6	2.4	7.5	38.9	26.8	24.6	4.8	33	41.3
16S	15.7	2.4	7.5	38.9	26.8	27.4	4.8	38	44.4
16	15.7	2.4	7.5	48.5	32.1	27.4	4.8	38	44.4
18	16.8	2.4	9.0	49.3	33.7	30.8	4.8	40	47.6
20	18.0	2.4	9.1	49.3	33.7	34.2	4.8	44	50.8
22	20.2	2.4	9.1	49.3	33.7	37.4	4.8	51	54.2
24	20.2	2.4	9.1	49.6	33.7	40.9	4.8	51	57.2
28	22.5	2.4	10.0	51.9	35.2	46.7	5.6	56	63.5
32	24.7	2.4	10.0	51.9	35.2	53.4	5.6	62	69.8
36	26.9	2.4	8.3	51.9	35.2	59.6	5.6	71	76.2
40	29.6	2.4	8.3	51.9	35.2	65.5	5.6	75	82.5

All dimensions for reference only.

GT08A
90° angle plug

- **Without a wire sealing grommet or clamp**
- **Non-environment proof**
- **If a cable clamp is required, see pages 84 and 86**

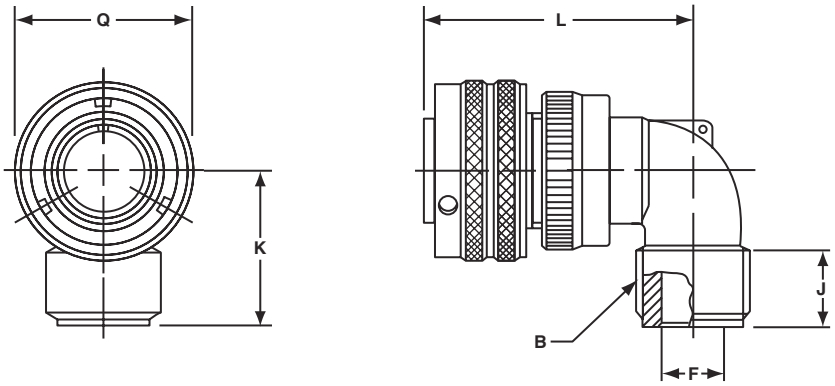

Inches

Shell Size	B Thread Class 2A	F Max.	J Min.	K Max.	L Max.	Q Max.
10SL	.6250-24UNEF	.337	.370	1.181	1.772	.898
14S	.7500-20UNEF	.462	.370	1.181	1.850	1.150
16S	.8750-20UNEF	.587	.370	1.181	1.890	1.299
16	.8750-20UNEF	.587	.370	1.181	2.244	1.299
18	1.0000-20UNEF	.685	.370	1.378	2.283	1.437
20	1.1875-18UNEF	.810	.370	1.378	2.402	1.571
22	1.1875-18UNEF	.915	.370	1.378	2.402	1.697
24	1.4375-18UNEF	1.025	.370	1.575	2.598	1.835
28	1.4375-18UNEF	1.139	.370	1.575	2.598	2.102
32	1.7500-18UNS	1.447	.433	1.772	2.835	2.366
36	2.0000-18UNS	1.687	.496	1.969	2.953	2.610
40	2.2500-16UN	1.923	.496	2.165	3.071	2.850

Millimeters

Shell Size	F Max.	J Min.	K Max.	L Max.	Q Max.
10SL	8.5	9.4	30	45	22.8
14S	11.7	9.4	30	47	29.2
16S	14.9	9.4	30	48	33.0
16	14.9	9.4	30	57	33.0
18	17.4	9.4	35	58	36.5
20	20.5	9.4	35	61	39.9
22	23.2	9.4	35	61	43.1
24	26.0	9.4	40	66	46.6
28	28.9	9.4	40	66	53.4
32	36.7	11.0	45	72	60.1
36	42.8	12.6	50	75	66.3
40	48.8	12.6	55	78	72.4

All dimensions for reference only.

GT08AF/08F
90° angle plug

GT08AF
- **With a cable clamp**
- **Wire sealing grommet not included**
- **Non-environment proof**

GT08F
- **With a wire sealing grommet and cable clamp**
- **For use with individual wires**
- **Environment proof**

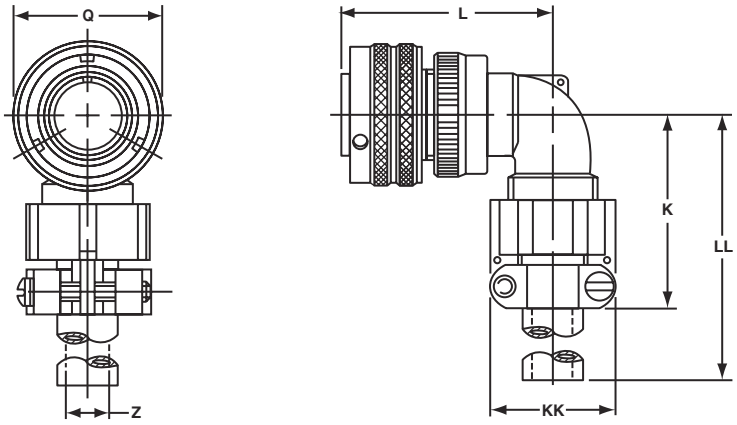

Inches

Shell Size	K Max.	L Max.	Q Max.	Z Max.	KK Max.	LL Max.
10SL	1.654	1.772	.898	.220	.894	3.937
14S	1.654	1.850	1.150	.312	1.083	3.937
16S	1.772	1.890	1.299	.437	1.181	3.937
16	1.772	2.244	1.299	.437	1.181	3.937
18	2.087	2.283	1.437	.562	1.299	3.937
20	2.087	2.402	1.571	.625	1.476	3.937
22	2.087	2.402	1.697	.625	1.476	3.937
24	2.283	2.598	1.835	.750	1.705	3.937
28	2.283	2.598	2.102	.750	1.705	3.937
32	2.598	2.835	2.366	.937	2.061	4.331
36	2.717	2.953	2.610	1.250	2.283	4.331
40	3.740	3.071	2.850	1.375	2.579	5.512

Millimeters

Shell Size	K Max.	L Max.	Q Max.	Z Max.	KK Max.	LL Max.
10SL	42	45	22.8	5.58	22.7	100
14S	42	47	29.2	7.92	27.5	100
16S	45	48	33.0	11.09	30.0	100
16	45	57	33.0	11.09	30.0	100
18	53	58	36.5	14.27	33.0	100
20	53	61	39.9	15.87	37.5	100
22	53	61	43.1	15.87	37.5	100
24	58	66	46.6	19.05	43.3	100
28	58	66	53.4	19.05	43.3	100
32	66	72	60.1	23.79	51.7	110
36	69	75	66.3	31.75	58.0	110
40	95	78	72.4	34.92	65.5	140

All dimensions for reference only.

GT08R
90° angle plug

- **With a wire sealing grommet for conduit termination**
- **For use with individual wires**
- **Environment proof**

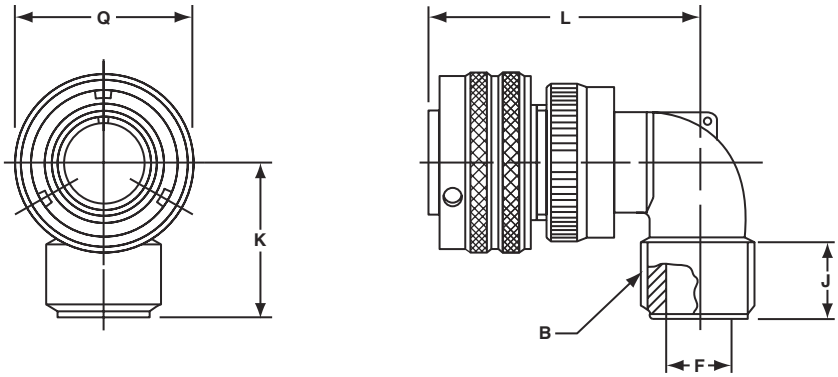

Inches

Shell Size	B Thread Class 2A	F Max.	J Min.	K Max.	L Max.	Q Max.
10SL	.6250-24UNEF	.337	.370	1.181	1.772	.898
14S	.7500-20UNEF	.462	.370	1.181	1.850	1.150
16S	.8750-20UNEF	.587	.370	1.181	1.890	1.299
16	.8750-20UNEF	.587	.370	1.181	2.244	1.299
18	1.0000-20UNEF	.685	.370	1.378	2.283	1.437
20	1.1875-18UNEF	.810	.370	1.378	2.402	1.571
22	1.1875-18UNEF	.915	.370	1.378	2.402	1.697
24	1.4375-18UNEF	1.025	.370	1.575	2.598	1.835
28	1.4375-18UNEF	1.139	.370	1.575	2.598	2.102
32	1.7500-18UNS	1.447	.433	1.772	2.835	2.366
36	2.0000-18UNS	1.687	.496	1.969	2.953	2.610
40	2.2500-16UN	1.923	.496	2.165	3.071	2.850

Millimeters

Shell Size	F Max.	J Min.	K Max.	L Max.	Q Max.
10SL	8.5	9.4	30	45	22.8
14S	11.7	9.4	30	47	29.2
16S	14.9	9.4	30	48	33.0
16	14.9	9.4	30	57	33.0
18	17.4	9.4	35	58	36.5
20	20.5	9.4	35	61	39.9
22	23.2	9.4	35	61	43.1
24	26.0	9.4	40	66	46.6
28	28.9	9.4	40	66	53.4
32	36.7	11.0	45	72	60.1
36	42.8	12.6	50	75	66.3
40	48.8	12.6	55	78	72.4

All dimensions for reference only.

GT05
dummy receptacle

- **Square flange**
- **Four through mounting holes**
- **Stows cable plugs when not in use**

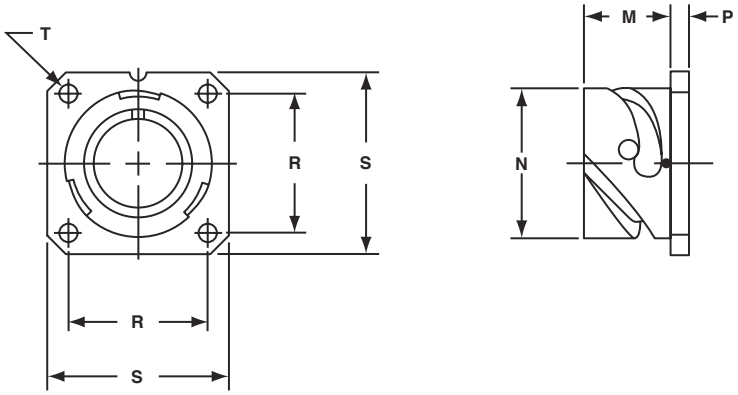

Inches

Shell Size	M + .016 − .000	N + .000 − .006	P ± .008	R ± .004	S ± .012	T + .004 − .000
10SL	.559	.717	.110	.717	1.000	.126
14S	.559	.969	.126	.906	1.181	.126
16S	.559	1.079	.126	.969	1.280	.126
16	.748	1.079	.126	.969	1.280	.126
18	.748	1.213	.157	1.063	1.378	.126
20	.748	1.346	.157	1.157	1.496	.126
22	.748	1.472	.157	1.252	1.614	.126
24	.811	1.610	.157	1.374	1.752	.146
28	.811	1.839	.157	1.563	2.000	.146
32	.874	2.102	.157	1.752	2.244	.169
36	.874	2.346	.157	1.937	2.500	.169
40	.874	2.579	.157	2.185	2.752	.169

Millimeters

Shell Size	M + 0.4 − 0.0	N + 0.00 − 0.15	P ± 0.2	R ± 0.1	S ± 0.3	T + 0.1 − 0.0
10SL	14.2	18.2	2.8	18.2	25.4	3.2
14S	14.2	24.6	3.2	23.0	30.0	3.2
16S	14.2	27.4	3.2	24.6	32.5	3.2
16	19.0	27.4	3.2	24.6	32.5	3.2
18	19.0	30.8	4.0	27.0	35.0	3.2
20	19.0	34.2	4.0	29.4	38.0	3.2
22	19.0	37.4	4.0	31.8	41.0	3.2
24	20.6	40.9	4.0	34.9	44.5	3.7
28	20.6	46.7	4.0	39.7	50.8	3.7
32	22.2	53.4	4.0	44.5	57.0	4.3
36	22.2	59.6	4.0	49.2	63.5	4.3
40	22.2	65.5	4.0	55.5	69.9	4.3

All dimensions for reference only.

GTTB
thru-bulkhead receptacles

- **Accepts mating plug on both sides**
- **Four through mounting holes**

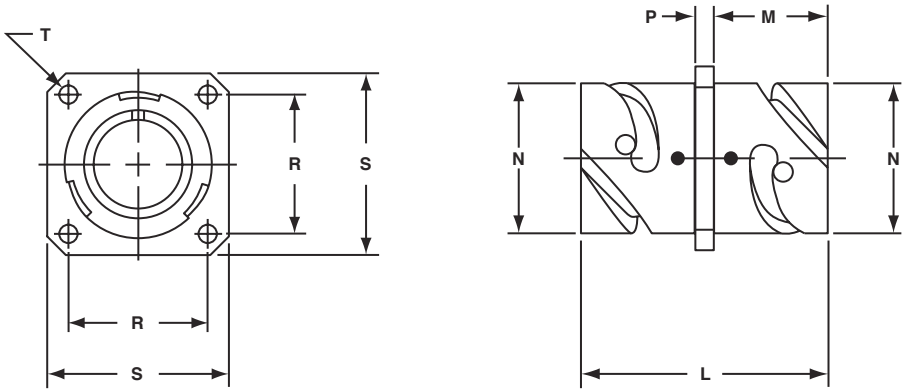

Inches

Shell Size	L Max.	M + .016 – .000	N + .000 – .006	P ± .008	R ± .004	S ± .012	T + .004 – .000
10SL	1.488	.717	.717	.110	.717	1.000	.126
14S	1.488	.717	.969	.126	.906	1.181	.126
16S	1.488	.717	1.079	.126	.969	1.280	.126
16	2.049	.846	1.079	.126	.969	1.280	.126
18	2.049	.907	1.213	.157	1.063	1.378	.126
20	2.049	.907	1.346	.157	1.157	1.496	.126
22	2.049	.907	1.472	.157	1.252	1.614	.126
24	2.049	.907	1.610	.157	1.374	1.752	.146
28	2.049	.947	1.839	.157	1.563	2.000	.146
32	2.049	.947	2.102	.157	1.752	2.244	.169
36	2.049	.947	2.346	.157	1.937	2.500	.169
40	2.049	.947	2.579	.157	2.185	2.752	.169

Millimeters

Shell Size	L Max.	M + 0.4 – 0.0	N + 0.00 – 0.15	P ± 0.2	R ± 0.1	S ± 0.3	T + .004 – .000
10SL	37.7	18.2	18.2	2.8	18.2	25.4	3.2
14S	37.7	18.2	24.6	3.2	23.0	30.0	3.2
16S	37.7	18.2	27.4	3.2	24.6	32.5	3.2
16	52.0	21.5	27.4	3.2	24.6	32.5	3.2
18	52.0	23.0	30.8	4.0	27.0	35.0	3.2
20	52.0	23.0	34.2	4.0	29.4	38.0	3.2
22	52.0	23.0	37.4	4.0	31.8	41.0	3.2
24	52.0	23.0	40.9	4.0	34.9	44.5	3.7
28	52.0	24.0	46.7	4.0	39.7	50.8	3.7
32	52.0	24.0	53.4	4.0	44.5	57.0	4.3
36	52.0	24.0	59.6	4.0	49.2	63.5	4.3
40	52.0	24.0	65.5	4.0	55.5	69.9	4.3

All dimensions for reference only.

ACA-B/GT Connectors
insert availability

Insert Arrange-ment	Service Rating	Total Con-tacts	Contact Size								
								Coax			
			0	4	8	12	16	0	4	8	12
10SL-3	A	3					3				
10SL-4†	A	2					2				
14S-2	Inst.	4					4				
14S-4	D	1					1				
14S-5	Inst.	5					5				
14S-6	Inst.	6					6				
14S-7	A	3					3				
14S-9	A	2					2				
14S-10	Inst.	4					4				
14S-12	A	3					3				
14S-A7	A	7					7				
16S-1	A	7					7				
16S-3	B	1					1				
16S-4	D	2					2				
16S-5	A	3					3				
16S-6	A	3					3				
16S-8	A	5					5				
16-2	E	1				1					
16-7	A	3			1		2				
16-9	A	4				2	2				
16-10	A	3				3					
16-11	A	2				2					
16-12	A	1		1							
16-13	A	2				2					
16-59	A	4				4					
18-1	A/Inst.	10					10				
18-3	D	2				2					
18-4	D	4					4				
18-5	D	3				2	1				
18-6	D	1		1							
18-7	B	1			1						
18-8	A	8				1	7				
18-9	Inst.	7				2	5				
18-10	A	4				4					
18-11	A	5				5					
18-12	A	6					6				
18-13	A	4			1	3					
18-14	A	2		1			1				
18-15	A	4				4					
18-16	C	1				1					
18-17	Inst.	7				2	5				
18-19	A	10					10				
18-20	A	5					5				
18-22	D	3					3				
18-24	A/Inst.	10					10				
18-29	A	5					5				
18-30	A	5					5				
18-31	A	5					5				

*Crimp contacts accommodate wire the same size as the contact as well as wire of the next smaller, even size. Arrangements identified with an asterisk (*) are exceptions. See insert arrangement drawings on pages 55-77 for application wire size.

Insert Arrange-ment	Service Rating	Total Con-tacts	Contact Size								
								Coax			
			0	4	8	12	16	0	4	8	12
20-2	D	1	1								
20-3	D	3				3					
20-4	D	4				4					
20-6	D	3					3				
20-7	D/A	8					8				
20-8	Inst.	6			2		4				
20-9	D/A	8				1	7				
20-11	Inst.	13					13				
20-12	A	2		1			1				
20-14	A	5			2	3					
20-15	A	7				7					
20-16	A	9				2	7				
20-17	A	6				5	1				
20-18	A	9				3	6				
20-19	A	3			3						
20-20	A	4		1		3					
20-21	A	9				1	8				
20-22	A	6			3		3				
20-23	A	2			2						
20-24	A	4			2		2				
20-25	Inst.	13					13				
20-26	A	19					19				
20-27	A	14					14				
20-29	A	17					17				
20-30	Inst.	13					13				
20-33	A	11					11				
20-51	A	3			3						
20-57	A	7				7*					
20-58	A	10				5	5				
20-59	A	3			3*						
20-66	A	6				5*	1				
20-79	A/D	8				1	7				
22-1	D	2			2						
22-2	D	3			3						
22-4	A	4			2	2					
22-5	D	6				2	4				
22-6	D	3			2		1				
22-7	E	1	1								
22-8	E	2				2					
22-9	E	3				3					
22-10	E	4					4				
22-11	B	2					2				
22-12	D	5			2		3				
22-13	D/A	5				4	1				
22-14	A	19					19				
22-15	E/A	6				5	1				

† 10SL-4 arrangement available only with pin contacts in receptacle and socket contacts in plug.

** Coaxial cable data can be found on insert arrangement drawings, pages 55-77. For further information on coaxial contacts call Amphenol Industrial at 888-364-9011.

ACA-B/GT Connectors
insert availability, cont.

Insert Arrangement	Service Rating	Total Contacts	Contact Size								
			0	4	8	12	16	Coax**			
								0	4	8	12
22-16	A	9				3	6				
22-17	D/A	9				1	8				
22-18	D/A	8					8				
22-19	A	14					14				
22-20	A	9					9				
22-21	A	3	1				2				
22-22	A	4			4						
22-23	D/A	8				8					
22-24	D/A	6				2	4				
22-27	D/A	9			1		8				
22-28	A	7				7					
22-33	D/A	7					7				
22-34	D	5				3	2				
22-63	A	12				4	8				
22-65	D/A	8				8*					
22-70	A	13				8	5				
22-80	A	3			3*						
24-2	D	7				7					
24-3	D	7				2	5				
24-5	A	16					16				
24-6	D/A	8				8					
24-7	A	16				2	14				
24-9	A	2		2							
24-10	A	7			7						
24-11	A	9			3	6					
24-12	A	5		2		3					
24-16	D/A	7			1	3	3				
24-17	D	5				2	3				
24-19	A	12					12				
24-20	D	11				2	9				
24-21	D	10			1		9				
24-22	D	4			4						
24-27	E	7					7				
24-28	Inst.	24					24				
24-51	A	5			5						
24-52	Hi Volt.	1				1					
24-53	A	5			5						
24-58	A	13			3	3	7				
24-59	A	14				7	7				
24-60	A	7			7*						
24-65	A	15				11	4				
24-66	D	7				7					
24-67	Inst.	19				19					
24-71	A	7			7*						
24-75	A	7			7*						
24-79	A	5			5						
24-80	Inst.	23					23				

*Crimp contacts accommodate wire the same size as the contact as well as wire of the next smaller, even size. Arrangements identified with an asterisk (*) are exceptions. See insert arrangement drawings on pages 55-77 for application wire size.

Insert Arrangement	Service Rating	Total Contacts	Contact Size								
			0	4	8	12	16	Coax**			
								0	4	8	12
24-84	A	19				1					18
24-96	Inst.	28					28				
24-AJ	A	25					25				
28-1	D/A	9			3	6					
28-2	D	14				2	12				
28-3	E	3			3						
28-4	E/D	9				2	7				
28-5	D	5		2		1	2				
28-6	D	3		3							
28-7	D	2		2							
28-8	E/D/A	12				2	10				
28-9	D	12				6	6				
28-10	D/A	7		2	2	3					
28-11	A	22				4	18				
28-12	A	26					26				
28-13	A	26					26				
28-15	A	35					35				
28-16	A	20					20				
28-17	B/D/A	15					15				
28-18	C/D/A/Inst.	12					12				
28-19	B/D/A	10				4	6				
28-20	A	14				10	4				
28-21	A	37					37				
28-22	D	6		3			3				
28-51	A	12				12					
28-59	A	17				7	10				
28-66	A	16			2	14					
28-72	Coax	3							3		
28-74	A	16			7*		9				
28-75	A	16			7*		9				
28-79	A	16			7		9				
28-82	D	6			2	4					
28-84	A	9			9						
28-AY	A	9		4			5				
32-1	E/D	5	2			3					
32-2	E	5		3			2				
32-3	D	9	1	2		2	4				
32-4	A/D	14				2	12				
32-5	D	2	2								
32-6	A	23		2	3	2	16				
32-7	Inst./A	35				7	28				
32-8	A	30				6	24				
32-9	D	14		2			12				
32-10	E/B/D/A	7		2	2		3				
32-12	A/D	15				5	10				
32-13	D	23				5	18				
32-15	D	8	2			6					
32-16	A	23		2	3	2	16				

** Coaxial cable data can be found on insert arrangement drawings, pages 55-77. For further information on coaxial contacts call Amphenol Industrial at 888-364-9011.

ACA-B/GT Connectors
insert availability, cont.

Insert Arrangement	Service Rating	Total Contacts	Contact Size								
								Coax**			
			0	4	8	12	16	0	4	8	12
32-17	D	4		4							
32-22	A	54					54				
32-25	A	25				25					
32-31	A	31					31				
32-48	Inst.	48					48				
32-52	D	8	2			6					
32-53	E/Inst.	42				5	37				
32-56	A	30				6*	24				
32-57	Coax	8				6		2			
32-58	Coax	4							4		
32-59	A	42					40			2	
32-60	A	23					15			8	
32-62	Coax	23		2	1	2	16			2	
32-64	Inst.	54					54				
32-68	A	16					12		4		
32-73	A	46					46				
32-75	Coax	9				2				7	
32-76	A	19				19					
32-79	D	5		4	1						
32-82	A	16		4			12				
32-AF	A	55					55				
32-AM	A	1	1 size 4/0								
36-1	D	22				4	18				
36-3	D	6	3			3					
36-4	D/A	3	3								
36-5	A	4	4								
36-6	A	6	2	4							
36-7	A	47				7	40				
36-8	A	47				1	46				
36-9	A	31		1	2	14	14				
36-10	A	48					48				
36-11	A	48					48				
36-12	A	48					48				
36-13	E/A	17				2	15				
36-14	D	16			5	5	6				
36-15	D/A	35					35				
36-16	A	47				7	40				
36-17	A	47				7	40				
36-18	A	31		1	2	14	14				
36-20	A	34			2	2	30				
36-22	D	22				22					
36-51	D	4	2	2							
36-52	A	52					52				
36-54	A	39			8		31				
36-55	A	39			8*		31				
36-59	A	53				3*	50				
36-60	A	47				7*	40				
36-64	Coax	4						4			
36-65	Coax	4						4			

Insert Arrangement	Service Rating	Total Contacts	Contact Size								
								Coax**			
			0	4	8	12	16	0	4	8	12
36-71	A	53				3	50				
36-73	Coax	7							7		
36-74	A	44					43			1	
36-75	A	48					48*				
36-76	A	47					47				
36-77	D	7		7							
36-78	A	14			12		2				
36-79	A	20				20					
36-80	A	20				20*					
36-83	Coax	7							7		
36-85	A/D	35					35*				
36-97	C	1	1 size 4/0								
36-99	D	12		3	3	3	3				
36-AF	A	48					48				
40-1	D	30				6	24				
40-5	A	5	5								
40-9	A	47			1	22	24				
40-10	A	29		4	9		16				
40-30	A	30		1		29					
40-35	D	35				35					
40-53	A	60					60				
40-56	A	85					85				
40-57	E	4	4								
40-61	A	59			1	3	55				
40-62	A	60					60				
40-63	A	61					61*				
40-64	Coax	36				3	20			13	
40-66	Coax	4						4			
40-67	A	11					1		10		
40-68	A	21			21						
40-70	A	61					61				
40-72	A	11					1		10		
40-73	A	61					61				
40-74	A	6				1		4	1		
40-75	E	5	4			1					
40-80	A	11		10			1				
40-81	A	62					62*				
40-82	A	62					62				
40-85	A	60					60*				
40-86	Coax	4						4			
40-87	D	7		7							
40-AD	A	8	4		4						
40-AG	A	38				38					
40-AP	E	2	2 size 4/0								
40-AR	Inst.	13	3	3		7					
40-AS	A	40				25	15				
40-AT	A	43			1	24	18				
40-AU	A	14		3	10		1				
40-AV	D	3	3 size 2/0								

*Crimp contacts accommodate wire the same size as the contact as well as wire of the next smaller, even size. Arrangements identified with an asterisk (*) are exceptions. See insert arrangement drawings on pages 55-77 for application wire size.

** Coaxial cable data can be found on insert arrangement drawings, pages 55-77. For further information on coaxial contacts call Amphenol Industrial at 888-364-9011.

ACA-B/GT Connectors
insert alternate positioning

To avoid cross-plugging problems in applications requiring the use of more than one connector of the same size and arrangement, alternate rotations are available as indicated in the accompanying charts.

As shown in the diagram below, the front face of the pin insert is rotated within the shell in a clockwise direction from the normal shell key. The socket insert would be rotated counter-clockwise the same number of degrees in respect to the normal shell key.

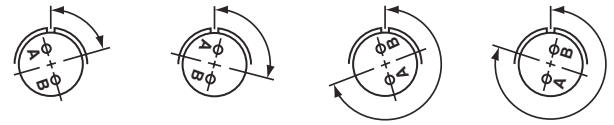

View looking into front face of pin insert or rear of socket insert.

The following insert arrangements have the same alternate insert rotations for W, X, Y and Z, which are:

Degrees			
W	X	Y	Z
80	110	250	280

T

16-7	20-16	22-18	24-4	24-28	28-16	32-10
18-5	20-20	22-19	24-5	24-AJ	28-17	32-12
18-9	20-22	22-21	24-6	28-1	28-19	32-13
18-13	22-3	22-24	24-7	28-4	28-20	32-22
18-14	22-6	22-25	24-12	28-8	28-21	32-AF
20-7	22-12	22-29	24-14	28-9	32-1	36-1
20-8	22-14	22-33	24-16	28-10	32-3	36-7
20-9	22-15	22-34	24-17	28-11	32-4	36-8
20-12	22-16	24-1	24-20	28-14	32-6	36-13
20-14	22-17	24-3	24-21	28-15	32-9	40-53

Insert Arrangement	Degrees			
	W	X	Y	Z
10SL-4	63	–	–	–
14S-2	–	120	240	–
14S-5	–	110	–	–
14S-7	90	180	270	–
14S-9	70	145	215	290
16-9	35	110	250	325
16-10	90	180	270	–
16-11	35	110	250	325
16-13	35	110	250	325
16S-1	80	–	–	280
16S-4	35	110	250	325
16S-5	70	145	215	290
16S-6	90	180	270	–
16S-8	–	170	265	–
18-1	70	145	215	290
18-3	35	110	250	325
18-4	35	110	250	325
18-8	70	–	–	290
18-10	–	120	240	–
18-11	–	170	265	–
18-12	80	–	–	280
18-15	–	120	240	–
18-20	90	180	270	–
18-22	70	145	215	290
18-29	90	180	270	–
20-3	70	145	215	290
20-4	45	110	250	–
20-5	35	110	250	325
20-6	70	145	215	290
20-15	80	–	–	280
20-17	90	180	270	–
20-18	35	110	250	325

Insert Arrangement	Degrees			
	W	X	Y	Z
20-19	90	180	270	–
20-21	35	110	250	325
20-23	35	110	250	325
20-24	35	110	250	325
20-27	35	110	250	325
20-29	80	–	–	280
20-33	–	–	–	280
22-1	35	110	250	325
22-2	70	145	215	290
22-4	35	110	250	325
22-5	35	110	250	325
22-8	35	110	250	325
22-9	70	145	215	290
22-10	35	110	250	325
22-11	35	110	250	325
22-13	35	110	250	325
22-20	35	110	250	325
22-22	–	110	250	–
22-23	35	–	250	–
22-27	80	–	250	280
22-28	80	–	–	280
24-2	80	–	–	280
24-9	35	110	250	325
24-10	80	–	–	280
24-11	35	110	250	325
24-22	45	110	250	–
24-27	80	–	–	280
24-96	65	–	–	–
28-2	35	110	250	325
28-3	70	145	215	290
28-5	35	110	250	325
28-6	70	145	215	290

Insert Arrangement	Degrees			
	W	X	Y	Z
28-7	35	110	250	325
28-12	90	180	270	–
28-18	70	145	215	290
28-22	70	145	215	290
28-AY	45	110	250	–
32-2	70	145	215	290
32-5	35	110	250	325
32-7	80	125	235	280
32-8	80	125	235	280
32-15	35	110	250	280
32-17	45	110	250	–
32-25	60	120	–	–
32-64*	80	100	110	250
32-68	30	–	–	–
32-82	30	–	–	–
36-3	70	145	215	290
36-4	70	145	215	290
36-5	–	120	240	–
36-6	35	110	250	325
36-9	80	125	235	280
36-10	80	125	235	280
36-14	90	180	270	–
36-15	60	125	245	305
36-AF	65	–	–	–
40-1	65	130	235	300
40-5	33	–	–	270
40-9	65	125	225	310
40-10	65	125	225	310
40-35	70	130	230	290
40-56	72	144	216	288
40-AG	37	74	285	322

*Additional rotations available; consult Amphenol for information.

ACA-B/GT Connectors
solder contacts

Machined copper alloy contacts in a full range of sizes, with closed entry socket design in the size 12 and 16 contacts. A heavy silver-plated finish is deposited on all solder contacts for maximum corrosion resistance, maximum current carrying capacity and low millivolt drop. Gold plated contacts are also available. (See how to order, page 78 for ACA-B and page 79 for GT.)

Pin/ Socket	Mating End Size	Wire Barrel Size	Allowable Wire Size	Test Current** Amps
Pin Socket	16 Short†	16	16 18 20 22	13 10 7.5 5
Pin Socket	16 Long	16	16 18 20 22	13 10 7.5 5
Pin Socket	12	12	12 14	23 17
Pin Socket	8	8	8 10	46 33
Pin Socket	4	4	4 6	80 60
Pin Socket	0	0	0 1 2	150 125 100

** Contact ratings as stated are test ratings only. The connector may not withstand full rated current through all contacts continuously.

Please note that the electrical data given is not an establishment of electrical safety factors. This is left entirely in the designer's hands as he can best determine which peak voltage, switching surges, transients, etc. can be expected in a particular circuit.

† The 10SL, 14S and 16S connectors require short contacts.

Table I
MIL-SPEC CONTACT ARRANGEMENT SERVICE RATING

MS Service Rating	Recommended Operating Voltage* at Sea Level		Effective Creepage Distance Nom.	Mechanical Spacing Nom.
	DC	AC (RMS)		
Inst.	250	200	1/16	
A	700	500	1/8	1/16
D	1250	900	3/16	1/8
E	1750	1250	1/4	3/16
B	2450	1750	5/16	1/4
C	4200	3000	1	5/16

* The values listed in Table I represent operating values which include a generous safety factor. It may be necessary for some applications to exceed the operating voltages listed here. If this is necessary, designers will find Table II useful for determining the degree to which the recommended values of Table I can be exceeded.

Table II
ALTITUDE VOLTAGE DERATING** CHART

MS Service Rating	Nominal Distance		Standard Sea Level Conditions		Pressure Altitude † 50,000 Feet		Pressure Altitude † 70,000 Feet	
	Airspace	Creepage	Minimum Flashover Voltage AC (RMS)	Test Voltage AC (RMS)	Minimum Flashover Voltage AC (RMS)	Test Voltage AC (RMS)	Minimum Flashover Voltage AC (RMS)	Test Voltage AC (RMS)
Inst.	1/32	1/16	1400	1000	550	400	325	260
A	1/16	1/8	2800	2000	800	600	450	360
D	1/8	3/16	3600	2800	900	675	500	400
E	3/16	1/4	4500	3500	1000	750	550	440
B	1/4	5/16	5700	4500	1100	825	600	480
C	5/16	1	8500	7000	1300	975	700	560

† Not corrected for changes in density due to variations in temperature.

** No attempt has been made to recommend operating voltages. The designer must determine his own operating voltage by the application of a safety factor to the above derating chart to compensate for circuit transients, surges, etc.

ACA-B/GT Connectors
crimp contacts and application tools

Machined from copper alloys and silver or gold plated for maximum corrosion resistance, with a minimum millivolt drop and a maximum current carrying capacity, the size 16 and 12 socket contacts are of the closed entry design. Crimp contacts are available for all insert arrangements and are identified based on part number call out. (See how to order, page 78 for ACA-B and page 79 for GT.)

CRIMP CONTACTS

CRIMP CONTACT DATA						APPLICATION TOOLS		
PART NUMBER				MATING SIZE	WIRE WELL	Crimp Tools	Positioner/ Die Set	Locator/ Color
PIN CONTACT		SOCKET CONTACT						
SILVER	GOLD	SILVER	GOLD					
10-40553	10-597160-1531	10-597109-161	10-597109-1631	16S	16-18-20	Daniels AF8 or Equivalent	TH29-1 or Equivalent	Red
10-606014-40	10-597160-4031	10-597109-401	10-597109-4031		12-14			
10-606014-221	10-597160-1931	10-597109-191	10-597109-1931		14-16			
10-606014-291	10-597160-3431	10-597109-341	10-597109-3431		20-22			
10-606014-46	10-597160-4631	10-597109-461	10-597109-4631		20-24			
10-40557	10-597160-1631	10-597109-171	10-597109-1731	16	16-18-20			Pin - Blue Socket - Green
10-606014-022	10-597160-2231	10-597109-221	10-597109-2231		12-14			
10-606014-171	10-597160-1731	10-597109-141	10-597109-1431		14-16			
10-606014-311	10-597160-3331	10-597109-331	10-597109-3331		20-22			
10-606014-361	10-597160-3631	10-597109-361	10-597109-3631		20-24			
10-606014-121	10-597160-1231	10-597109-131	10-597109-1331	12	12-14			Green
10-606014-231	10-597160-2331	10-597109-231	10-597109-2331		8-10			
10-606014-251	10-597160-2631	10-597109-261	10-597109-2631		10-12			
10-606014-271	10-597160-2731	10-597109-271	10-597109-2731		14-16-18			
10-606014-261	10-597160-2431	10-597109-241	10-597109-2431		18-20			
10-606014-201	10-597160-2031	10-597109-201	10-597109-2031		20-22			
10-40792	10-597160-831	10-40793	10-597109-831	8	8	Pico 400BH31	Pico 41431A-8N	Pico Pin - 4025 Socket - 4026
10-606014-41	10-597160-4131	10-597109-411	10-597109-4131		6			
10-606014-321	10-597160-2831	10-606015-321	10-597109-2831		10-12			
10-606014-381	10-597160-3831	10-597109-381	10-597109-3831		12-14			
10-40564	10-597160-431	10-40565	10-597109-431	4	4		Pico 41431A-4N	Pico 4043
10-606014-58	10-597160-5831	10-597109-581	10-597109-5831		6			
10-606014-331	10-597160-3531	10-597109-351	10-597109-3531		8			
10-606014-44	10-597160-4431	10-606015-44	10-597109-4431		10			
10-581806-000	10-597160-131	10-581808-000	10-597159-131	0	0		Pico 41431A-0N	Pico Pin - 4042-1 Socket - 4042
10-606014-341	10-597160-2931	10-597109-291	10-597109-2931		0-2			
10-606014-351	10-597160-3031	10-606015-351	10-597109-3031		4			
10-597276-48	10-597276-4831	10-606015-48	10-597109-4831	2/0	2/0	Pico 500	Pico 51431A2/0N	Pico Pin - 6490
10-597276-47	10-597276-4731	10-606015-47	10-597109-4731	4/0	4/0		Pico 51431A4/0N	Socket - 6491

Additional contact variations including thermocouple contacts are available; consult Amphenol, Sidney, NY for information.

RADSOK® Technology

RADSOK® Technology Advantages

RADSOK'S twisted grid configuration allows for 50% more current to pass through the same size pin, while providing increased reliability, ampacity and cycle durability as well as lower insertion force, T-rise and voltage drop.

• HIGH RELIABILITY

Unique RADSOK® design and construction technology create an electrical contact interface that exceeds typical interconnect requirements. Applications in aerospace, medical, industrial, automotive, mining, offshore, and other harsh environments depend on the high reliability of Amphenol's RADSOK® technology.

• LOW CONTACT ENGAGEMENT/SEPARATION FORCES

The hyperbolic lamella socket contact construction distributes normal forces over a high percentage of the mating pin surface. This creates a smooth, even engagement effort. This force distribution also contributes to excellent performance in vibration applications with resistance to typical fretting corrosion.

• LOW CONTACT RESISTANCE

The large interface area between the socket lamella and pin surface result in very low contact resistance, enabling the RADSOK® contacts' high current ratings compared to traditional power contact designs.

• HIGH MATING CYCLE DURABILITY

RADSOK® contacts with typical silver plating finishes have demonstrated survival of 20,000 mating cycles. Specialized plating and contact lubricants can extend cycle life to 200,000 matings or higher. Even with continuous exposure to harsh environmental abuse (salt, sand, and high humidity), RADSOK® contacts have been tested to maintain low contact resistance beyond 10,000 mating cycles.

RADSOK® Derating Chart – Temperature vs. Current

Based on single conductors in free air. Wire cross-section same size as pin contact cross-sectional area.

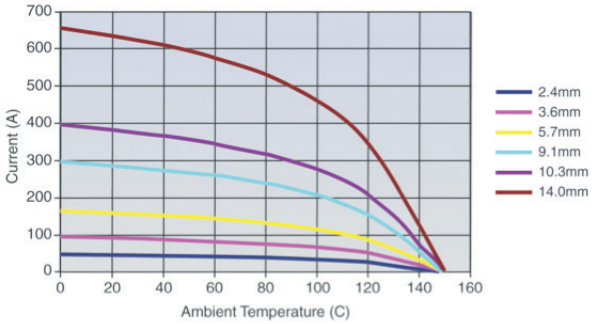

RADSOK® Socket Table

CRIMP CONTACT DATA				APPLICATION TOOLS		
RADSOK® Part Number		Mating Size	Wire Well	Crimp Tools	Positioner/Die Set	Locator/Color
Socket Contact						
Silver	Gold					
10-639140-121	10-639140-1231	12	12-14	Daniels AF8 or Equivalent	TH29-1 or Equivalent	Green
10-639140-081	10-639140-0831	8	8	Pico 400BH31	Pico 41431A-8N	Socket - 4026
10-639140-041	10-639140-0431	4	4	Pico 400BH31	Pico 41431A-4N	Pico 4043
10-639140-001	10-639140-0031	0	0	Pico 400BH31	Pico 41431A-0N	Socket - 4042

ACA-B/GT Connectors
contact arrangements

front face of pin insert or rear face of socket insert illustrated

	Front of Socket Insert	Front of Socket Insert			
Insert Arrangement	**10SL-3**	**10SL-4**	**14S-2**	**14S-4**	**14S-5**
Service Rating	**A**	**A**	**Inst.**	**D**	**Inst.**
Number of Contacts	**3**	**2**	**4**	**1**	**5**
Contact Size	**16**	**16**	**16**	**16**	**16**

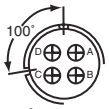

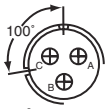

				100° Rotation of 14S-2	100° Rotation of 14S-7
Insert Arrangement	**14S-6**	**14S-7**	**14S-9**	**14S-10**	**14S-12**
Service Rating	**Inst.**	**A**	**A**	**Inst.**	**A**
Number of Contacts	**6**	**3**	**2**	**4**	**3**
Contact Size	**16**	**16**	**16**	**16**	**16**

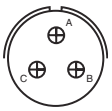

Insert Arrangement	**14S-A7**	**16S-1**	**16S-3**	**16S-4**	**16S-5**
Service Rating	**A**	**A**	**B**	**D**	**A**
Number of Contacts	**7**	**7**	**1**	**2**	**3**
Contact Size	**16**	**16**	**16**	**16**	**16**

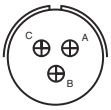

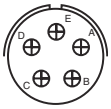

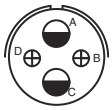

Insert Arrangement	**16S-6**	**16S-8**	**16-2**	**16-7**	**16-9**
Service Rating	**A**	**A**	**E**	**A**	**A**
Number of Contacts	**3**	**5**	**1**	**1 2**	**2 2**
Contact Size	**16**	**16**	**12**	**8 16**	**12 16**

CONTACT LEGEND	**16**	**12**	**8**	**4**	**0**

ACA-B/GT Connectors
contact arrangements

front face of pin insert or rear face of socket insert illustrated

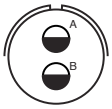

Insert Arrangement	**16-10**	**16-11**	**16-12**	**16-13**	**16-59**
Service Rating	**A**	**A**	**A**	**A**	**A**
Number of Contacts	**3**	**2**	**1**	**2***	**4**
Contact Size	**12**	**12**	**4**	**12**	**12**

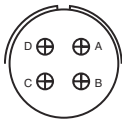

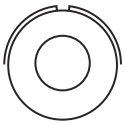

Insert Arrangement	**18-1**	**18-3**	**18-4**	**18-5**	**18-6**	**18-7**
Service Rating	**B, C, F, G = A; Bal. = Inst.**	**D**	**D**	**D**	**D**	**B**
Number of Contacts	**10**	**2**	**4**	**2 1**	**1**	**1**
Contact Size	**16**	**12**	**16**	**12 16**	**4**	**8**

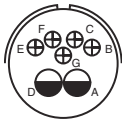

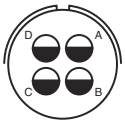

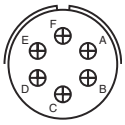

Insert Arrangement	**18-8**	**18-9**	**18-10**	**18-11**	**18-12**	**18-13**
Service Rating	**A**	**Inst.**	**A**	**A**	**A**	**A**
Number of Contacts	**1 7**	**2 5**	**4**	**5**	**6**	**1 3**
Contact Size	**12 16**	**12 16**	**12**	**12**	**16**	**8 12**

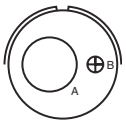

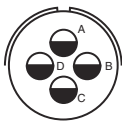

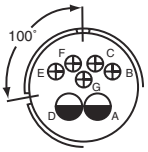

100° Rotation
of 18-9

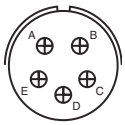

Insert Arrangement	**18-14**	**18-15**	**18-16**	**18-17**	**18-19**	**18-20**
Service Rating	**A**	**A**	**C**	**Inst.**	**A**	**A**
Number of Contacts	**1 1**	**4****	**1**	**2 5**	**10**	**5**
Contact Size	**4 16**	**12**	**12**	**12 16**	**16**	**16**

CONTACT LEGEND **16 12 8 4 0**

* A = Iron; B = Constantan
**A, C = Iron; B, D = Constantan

ACA-B/GT Connectors
contact arrangements

front face of pin insert or rear face of socket insert illustrated

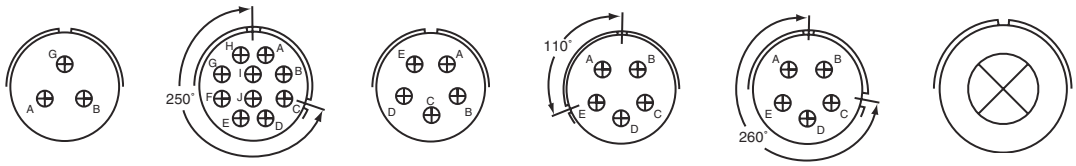

		250° Rotation of 18-1		110° Rotation of 18-20	260° Rotation of 18-20	
Insert Arrangement	**18-22**	**18-24**	**18-29**	**18-30**	**18-31**	**20-2**
Service Rating	**D**	**B, C, F, G = A; Bal. = Inst.**	**A**	**A**	**A**	**D**
Number of Contacts	**3**	**10**	**5**	**5**	**5**	**1**
Contact Size	**16**	**16**	**16**	**16**	**16**	**0**

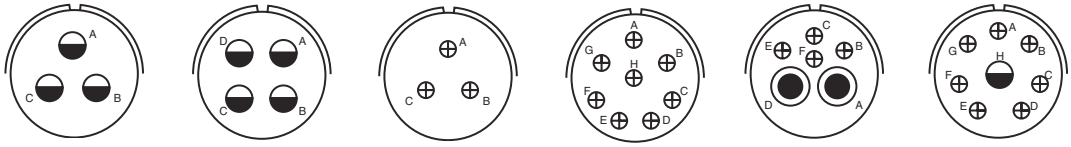

Insert Arrangement	**20-3**	**20-4**	**20-6**	**20-7**	**20-8**	**20-9**
Service Rating	**D**	**D**	**D**	**A, B, H, G = D; C, D, E, F = A**	**Inst.**	**H = D; Bal. = A**
Number of Contacts	**3**	**4**	**3**	**8**	**2 4**	**1 7**
Contact Size	**12**	**12**	**16**	**16**	**8 16**	**12 16**

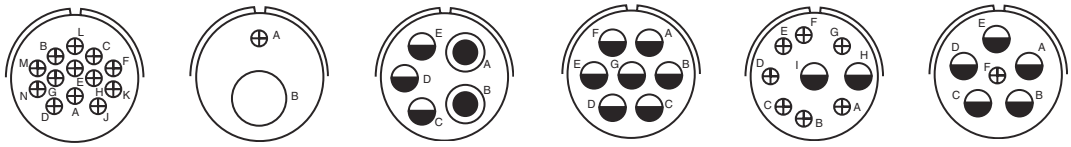

Insert Arrangement	**20-11**	**20-12**	**20-14**	**20-15**	**20-16**	**20-17**
Service Rating	**Inst.**	**A**	**A**	**A**	**A**	**A**
Number of Contacts	**13**	**1 1**	**2 3**	**7**	**2 7**	**5 1**
Contact Size	**16**	**4 16**	**8 12**	**12**	**12 16**	**12 16**

CONTACT LEGEND	**16**	**12**	**8**	**4**	**0**

ACA-B/GT Connectors
contact arrangements

front face of pin insert or rear face of socket insert illustrated

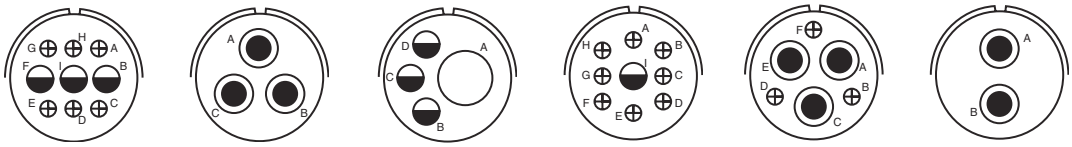

Insert Arrangement	**20-18**	**20-19**	**20-20**	**20-21**	**20-22**	**20-23**
Service Rating	**A**	**A**	**A**	**A**	**A**	**A**
Number of Contacts	**3 6**	**3**	**1 3**	**1 8**	**3 3**	**2**
Contact Size	**12 16**	**8**	**4 12**	**12 16**	**8 16**	**8**

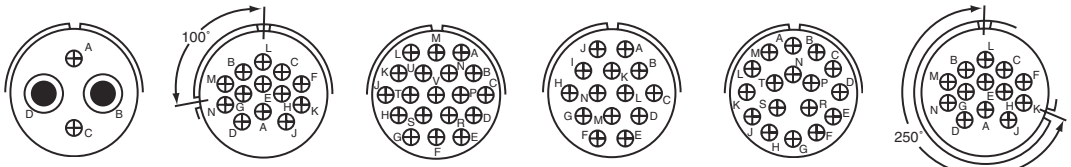

100° Rotation of 20-11

250° Rotation of 20-11

Insert Arrangement	**20-24**	**20-25**	**20-26**	**20-27**	**20-29**	**20-30**
Service Rating	**A**	**Inst.**	**A**	**A**	**A**	**Inst.**
Number of Contacts	**2 2**	**13**	**19**	**14**	**17**	**13**
Contact Size	**8 16**	**16**	**16**	**16**	**16**	**16**

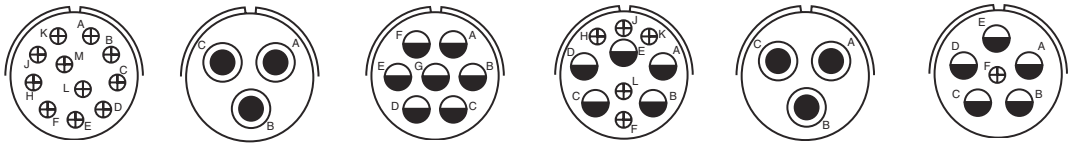

Insert Arrangement	**20-33**	**20-51**	**20-57**	**20-58**	**20-59**	**20-66**
Service Rating	**A**	**A**	**A**	**A**	**A**	**A**
Number of Contacts	**11**	**3***	**7***	**5 5**	**3***	**1 5**
Contact Size	**16**	**8**	**12 for #14 or 16 wire**	**12 16**	**8 for #10 or 12 wire**	**16 12 for #10 wire**

CONTACT LEGEND **16** **12** **8** **4** **0**

* Solderless

ACA-B/GT Connectors
contact arrangements

front face of pin insert or rear face of socket insert illustrated

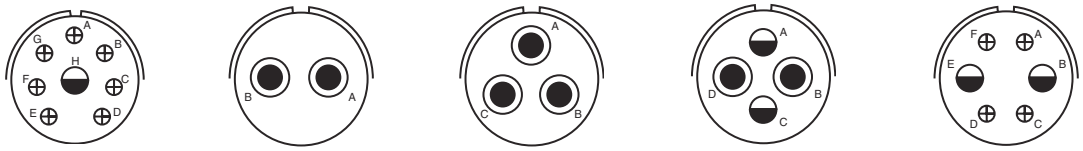

Insert Arrangement	**20-79**	**22-1**	**22-2**	**22-4**	**22-5**
Service Rating	**H=D; Bal. = A**	**D**	**D**	**A**	**D**
Number of Contacts	**7* 1***	**2**	**3**	**2 2**	**2 4**
Contact Size	**16 12 for #16 wire**	**8**	**8**	**8 12**	**12 16**

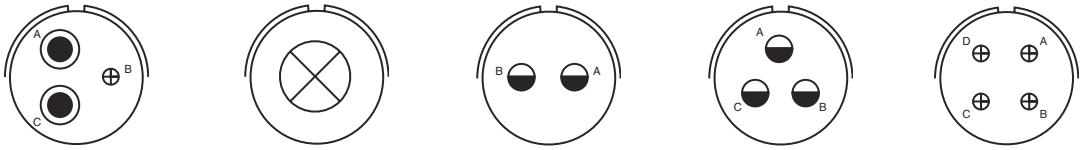

Insert Arrangement	**22-6**	**22-7**	**22-8**	**22-9**	**22-10**
Service Rating	**D**	**E**	**E**	**E**	**E**
Number of Contacts	**2 1**	**1**	**2**	**3**	**4**
Contact Size	**8 16**	**0**	**12**	**12**	**16**

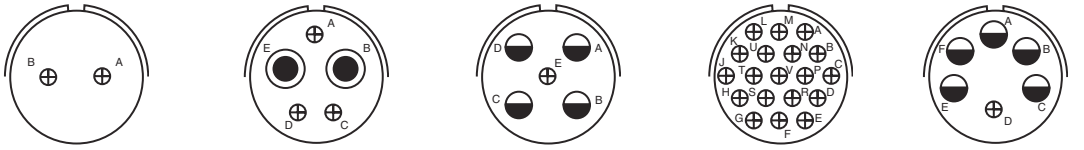

Insert Arrangement	**22-11**	**22-12**	**22-13**	**22-14**	**22-15**
Service Rating	**B**	**D**	**E = D; A, B, C, D = A**	**A**	**D = E; A, B, C, E, F = A**
Number of Contacts	**2**	**2 3**	**4 1**	**19**	**5 1**
Contact Size	**16**	**8 16**	**12 16**	**16**	**12 16**

CONTACT LEGEND **16 12 8 4 0**

* Solderless

ACA-B/GT Connectors
contact arrangements

front face of pin insert or rear face of socket insert illustrated

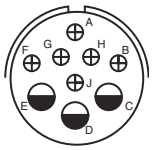
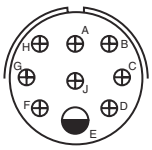
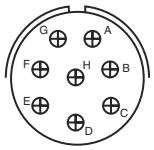
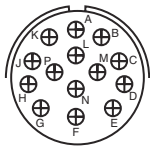
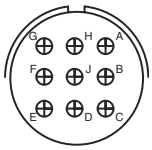

Insert Arrangement	**22-16**	**22-17**	**22-18**	**22-19**	**22-20**
Service Rating	**A**	**A = D; Bal. = A**	**A, B, F, G, H = D; C, D, E = A**	**A**	**A**
Number of Contacts	**3 6**	**1 8**	**8**	**14**	**9**
Contact Size	**12 16**	**12 16**	**16**	**16**	**16**

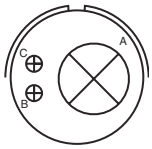
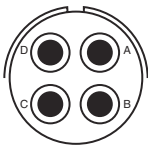
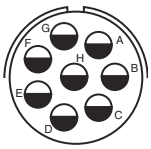
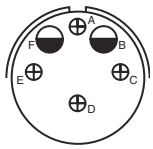
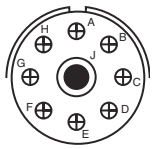

Insert Arrangement	**22-21**	**22-22**	**22-23**	**22-24**	**22-27**
Service Rating	**A**	**A**	**H = D; Bal. = A**	**C, D, E = D; A, B, F = A**	**J = D; Bal. = A**
Number of Contacts	**1 2**	**4**	**8**	**2 4**	**1 8**
Contact Size	**0 16**	**8**	**12**	**12 16**	**8 16**

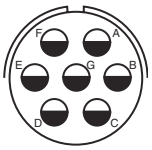
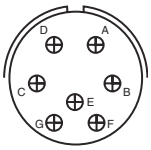
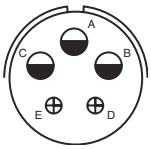
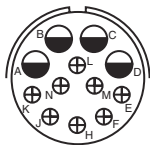
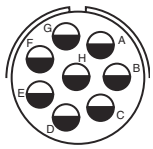

Insert Arrangement	**22-28**	**22-33**	**22-34**	**22-63**	**22-65**
Service Rating	**A**	**A, B, C, D = D; E. F. G = A**	**D**	**A**	**H = D; Bal. = A**
Number of Contacts	**7**	**7**	**3 2**	**4 8**	**8***
Contact Size	**12**	**16**	**12 16**	**12 16**	**12 for #14 or 16 wire**

CONTACT LEGEND **16 12 8 4 0**

* Solderless

ACA-B/GT Connectors
contact arrangements

front face of pin insert or rear face of socket insert illustrated

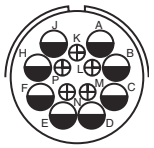
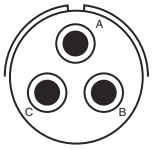
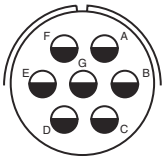
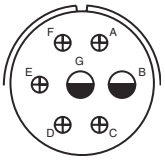
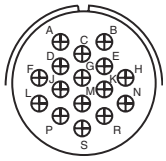

Insert Arrangement	**22-70**	**22-80**	**24-2**	**24-3**	**24-5**
Service Rating	**A**	**A**	**D**	**D**	**A**
Number of Contacts	**8 5**	**3***	**7**	**2 5**	**16**
Contact Size	**12 16**	**8 for #10 or 12 wire**	**12**	**12 16**	**16**

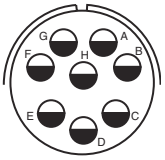
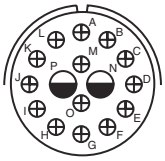
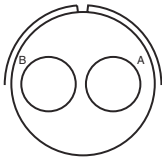
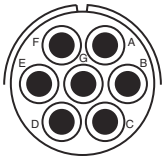
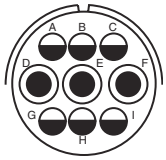

Insert Arrangement	**24-6**	**24-7**	**24-9**	**24-10**	**24-11**
Service Rating	**A, G, H = D; Bal. = A**	**A**	**A**	**A**	**A**
Number of Contacts	**8**	**2 14**	**2**	**7**	**3 6**
Contact Size	**12**	**12 16**	**4**	**8**	**8 12**

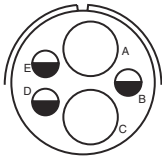
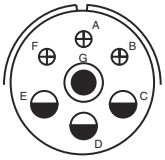
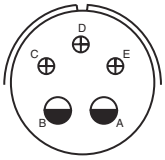
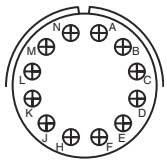
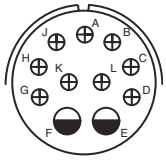

Insert Arrangement	**24-12**	**24-16**	**24-17**	**24-19**	**24-20**
Service Rating	**A**	**A, B, F, G = D; C, D, E = A**	**D**	**A**	**D**
Number of Contacts	**2 3**	**1 3 3**	**2 3**	**12**	**2 9**
Contact Size	**4 12**	**8 12 16**	**12 16**	**16**	**12 16**

CONTACT LEGEND **16 12 8 4 0**

* Solderless

ACA-B/GT Connectors
contact arrangements

front face of pin insert or rear face of socket insert illustrated

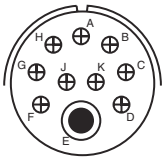
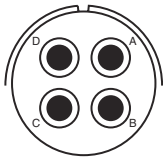
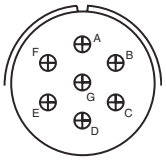
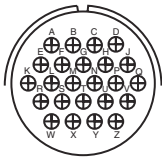
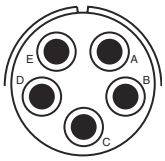

Insert Arrangement	**24-21**	**24-22**	**24-27**	**24-28**	**24-51**
Service Rating	**D**	**D**	**E**	**Inst.**	**A**
Number of Contacts	**1 9**	**4**	**7**	**24**	**5***
Contact Size	**8 16**	**8**	**16**	**16**	**B, E for AN #10 or 12 wire A, C, D for AN #8 wire**

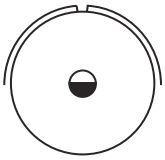
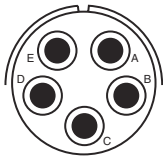

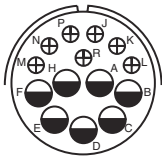
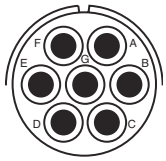

Insert Arrangement	**24-52**	**24-53**	**24-58**	**24-59**	**24-60**
Service Rating	**Hi-Volt**	**A**	**A**	**A**	**A**
Number of Contacts	**1**	**5***	**3 3 7**	**7 7**	**7***
Contact Size	**12**	**8**	**8 12 16**	**12 16**	**8 for #10 or 12 wire**

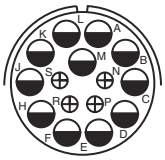
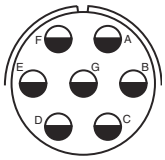
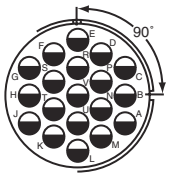

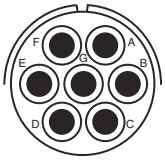
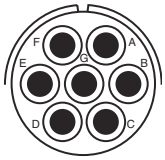

Insert Arrangement	**24-65**	**24-66**	**24-67**	**24-71**	**24-75**
Service Rating	**A**	**D**	**Inst.**	**A**	**A**
Number of Contacts	**11 4**	**7**	**19**	**2* 5***	**5 2**
Contact Size	**12 16**	**12**	**12**	**8 8 for #10 or 12 wire**	**8 8 for #16 wire**

CONTACT LEGEND **16 12 8 4 0**

* Solderless

ACA-B/GT Connectors
contact arrangements

front face of pin insert or rear face of socket insert illustrated

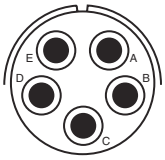
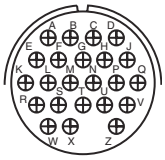
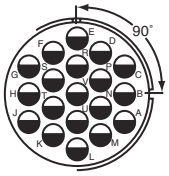

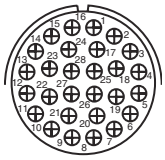

Insert Arrangement	**24-79**	**24-80**	**24-84**	**24-96**	**24-AJ**
Service Rating	**A**	**Inst.**	**A**	**Inst.**	**A**
Number of Contacts	**5**	**23**	**1 18**	**28**	**25**
Contact Size	**8**	**16**	**12 12 (Coax) RG-188/U or RG-174/U**	**16**	**16**

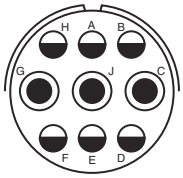
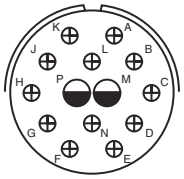
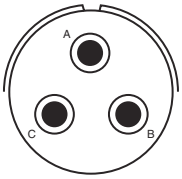
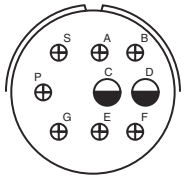

Insert Arrangement	**28-1**	**28-2**	**28-3**	**28-4**
Service Rating	**A, J, E = D; Bal. = A**	**D**	**E**	**G, P, S = E; Bal. = D**
Number of Contacts	**3 6**	**2 12**	**3**	**2 7**
Contact Size	**8 12**	**12 16**	**8**	**12 16**

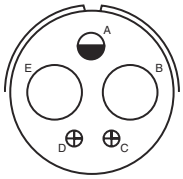
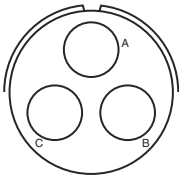
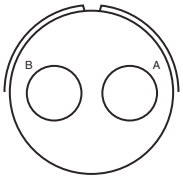
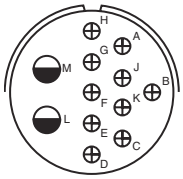

Insert Arrangement	**28-5**	**28-6**	**28-7**	**28-8**
Service Rating	**D**	**D**	**D**	**L, M = E; B = D; Bal. = A**
Number of Contacts	**2 1 2**	**3**	**2**	**2 10**
Contact Size	**4 12 16**	**4**	**4**	**12 16**

CONTACT LEGEND **16 12 8 4 0**

ACA-B/GT Connectors
contact arrangements

front face of pin insert or rear face of socket insert illustrated

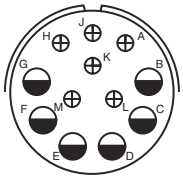

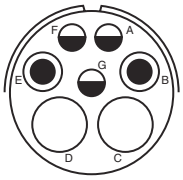

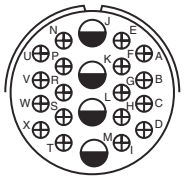

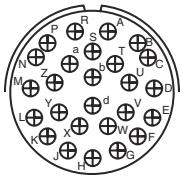

Insert Arrangement	**28-9**	**28-10**	**28-11**	**28-12**
Service Rating	**D**	**G = D; Bal. = A**	**A**	**A**
Number of Contacts	**6 6**	**2 2 3**	**4 18**	**26**
Contact Size	**12 16**	**4 8 12**	**12 16**	**16**

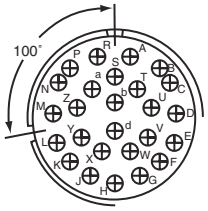

100° Rotation
of 28-12

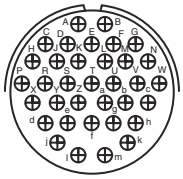

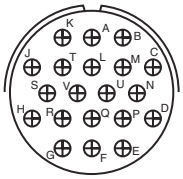

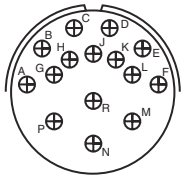

Insert Arrangement	**28-13**	**28-15**	**28-16**	**28-17**
Service Rating	**A**	**A**	**A**	**R = B; M, N, P = D; A to L = A**
Number of Contacts	**26**	**35**	**20**	**15**
Contact Size	**16**	**16**	**16**	**16**

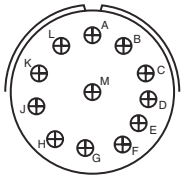

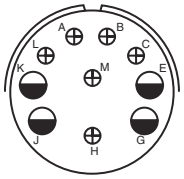

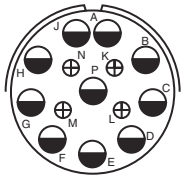

Insert Arrangement	**28-18**	**28-19**	**28-20**
Service Rating	**M = C; G, H, J, K,L = D; A, B = A; Bal. = Inst.**	**H, M = B; A, B, = D; Bal. = A**	**A**
Number of Contacts	**12**	**4 6**	**10 4**
Contact Size	**16**	**12 16**	**12 16**

* Solderless

CONTACT LEGEND **16 12 8 4 0**

ACA-B/GT Connectors
contact arrangements

front face of pin insert or rear face of socket insert illustrated

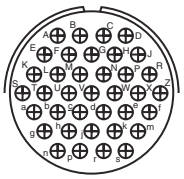
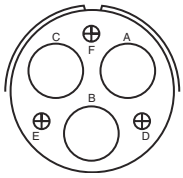
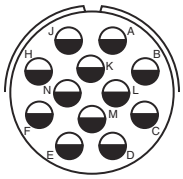
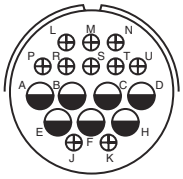

Insert Arrangement	**28-21**	**28-22**	**28-51**	**28-59**
Service Rating	**A**	**D**	**A**	**A**
Number of Contacts	**37**	**3 3**	**12**	**7 10**
Contact Size	**16**	**4 16**	**12**	**12 16**

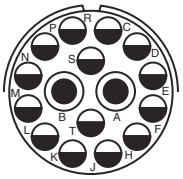
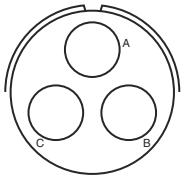
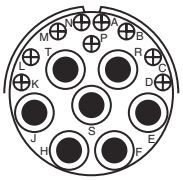
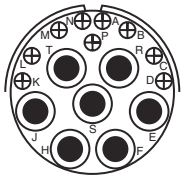

Insert Arrangement	**28-66**	**28-72**	**28-74**	**28-75**
Service Rating	**A**	**–**	**A**	**A**
Number of Contacts	**2 14**	**3**	**9* 4* 3***	**9* 7***
Contact Size	**8 12**	**4 (Coax) RG-59A/U or RG-62A/U**	**16 8 8 for #10 wire (S, T, R)**	**16 8 for #10 wire**

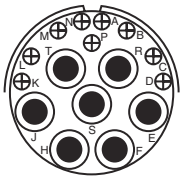
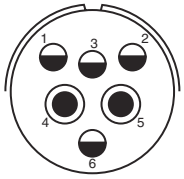
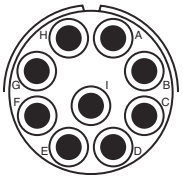
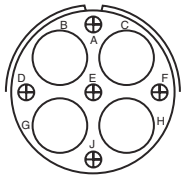

Insert Arrangement	**28-79**	**28-82**	**28-84**	**28-AY**
Service Rating	**A**	**D**	**A**	**A**
Number of Contacts	**7 9**	**2 4**	**9**	**4 5**
Contact Size	**8 16**	**8 12**	**8**	**4 16**

* Solderless

CONTACT LEGEND **16** **12** **8** **4** **0**

ACA-B/GT Connectors
contact arrangements

front face of pin insert or rear face of socket insert illustrated

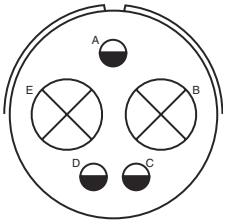

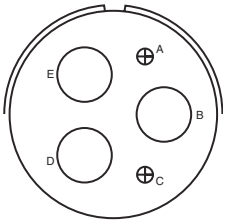

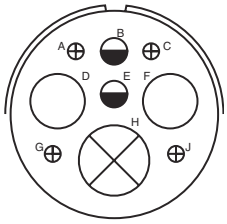

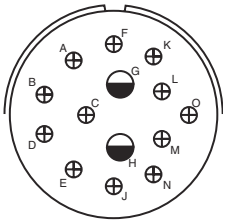

Insert Arrangement	32-1	32-2	32-3	32-4
Service Rating	A = E; B, C, D, E = D	E	D	F, J, K, N = A:, Bal. = D
Number of Contacts	2 3	3 2	1 2 2 4	2 12
Contact Size	0 12	4 16	0 4 12 16	12 16

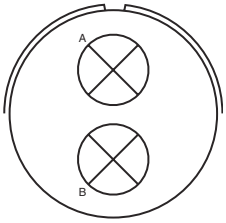

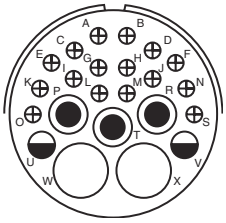

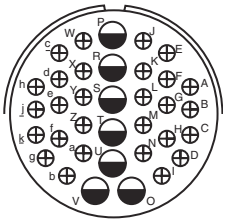

Insert Arrangement	32-5	32-6	32-7
Service Rating	D	A	A, B, h, j = Inst.; Bal. = A
Number of Contacts	2	2 3 2 16	7 28
Contact Size	0	4 8 12 16	12 16

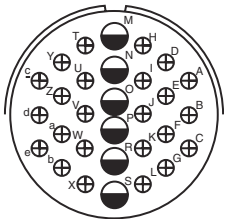

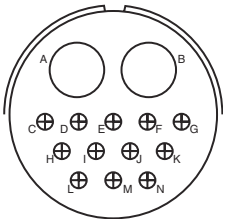

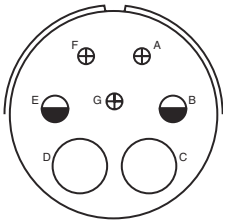

Insert Arrangement	32-8	32-9	32-10
Service Rating	A	D	A, F = E; G = B; B, E = D; C, D = A
Number of Contacts	6 24	2 12	2 2 3
Contact Size	12 16	4 16	4 8 16

CONTACT LEGEND 16 12 8 4 0

ACA-B/GT Connectors
contact arrangements

front face of pin insert or rear face of socket insert illustrated

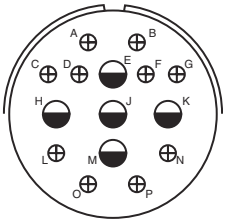

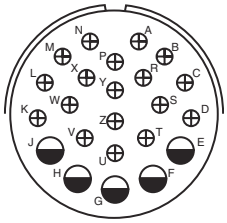

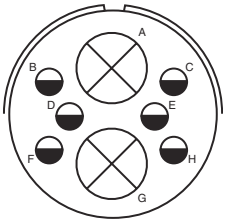

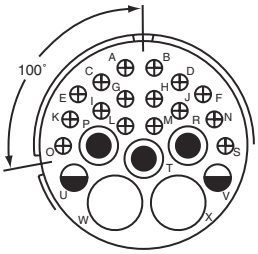

100° Rotation of 32-6

Insert Arrangement	**32-12**	**32-13**	**32-15**	**32-16**
Service Rating	**C, D, E, F, G = A; Bal. = D**	**D**	**D**	**A**
Number of Contacts	**5 10**	**5 18**	**2 6**	**2 3 2 16**
Contact Size	**12 16**	**12 16**	**0 12**	**4 8 12 16**

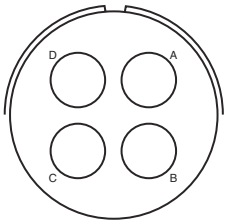

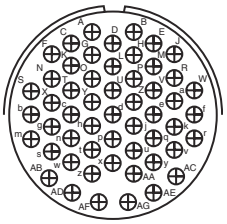

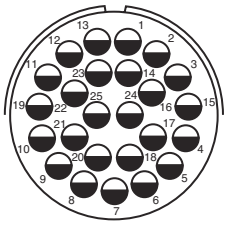

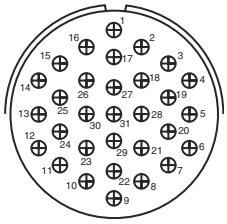

Insert Arrangement	**32-17**	**32-22**	**32-25**	**32-31**
Service Rating	**D**	**A**	**A**	**A**
Number of Contacts	**4**	**54**	**25**	**31**
Contact Size	**4**	**16**	**12**	**16**

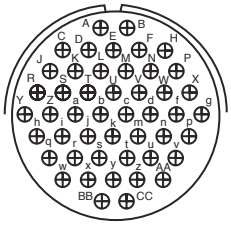

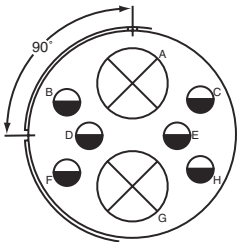

90° CW Rotation of 32-15

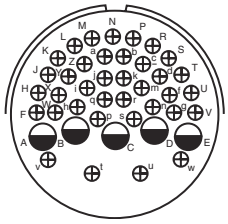

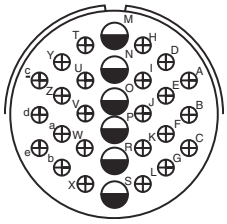

Insert Arrangement	**32-48**	**32-52**	**32-53**	**32-56**
Service Rating	**Inst.**	**D**	**t, u = E; Bal. = Inst.**	**A**
Number of Contacts	**48**	**2 6**	**5 37**	**24 6**
Contact Size	**16**	**0 12**	**12 16**	**16 12 for #10 wire**

CONTACT LEGEND **16 12 8 4 0**

ACA-B/GT Connectors
contact arrangements

front face of pin insert or rear face of socket insert illustrated

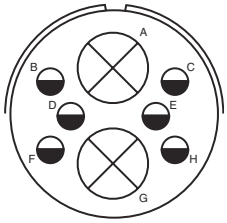

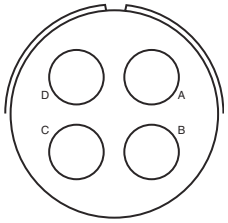

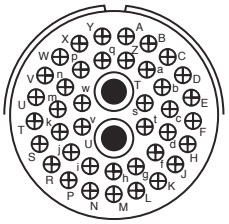

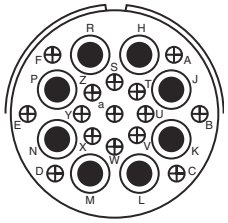

Insert Arrangement		**32-57**		**32-58**		**32-59**		**32-60**
Service Rating		**		–		A		A
Number of Contacts	6	2	4		40	2	15	8
Contact Size	12	0 (Coax) RG-71/U	4 (Coax) RG-161/U or RG-179/U		16	8 (Coax) RG-161/U	16	8 (Coax) RG-124/U

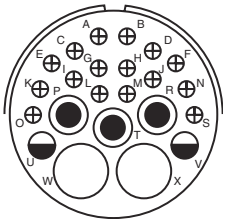

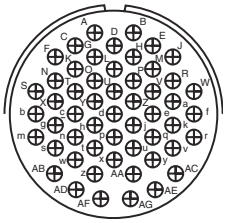

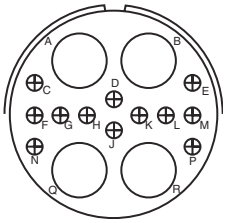

Insert Arrangement				**32-62**		**32-64**		**32-68**
Service Rating				**		Inst.		A
Number of Contacts	2	1	2	16	2	54	12	4
Contact Size	4	8	12	16	8 (Coax) RG-124/U	16	16	4 (Coax) RG-58C/U

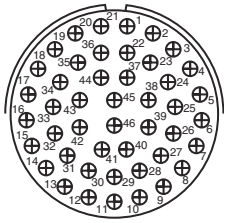

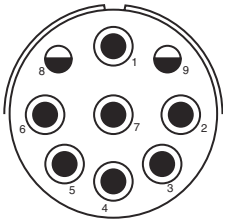

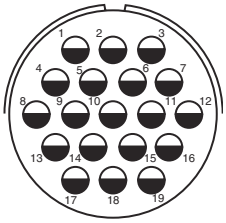

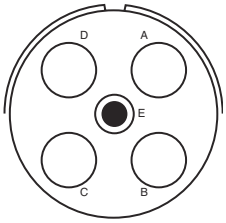

Insert Arrangement		**32-73**		**32-75**		**32-76**		**32-79**
Service Rating		A		8, 9 = D		A		D
Number of Contacts		46	2	7		19	4	1
Contact Size		16	12	8 (Coax) RG-180B/U		12	4	8

CONTACT LEGEND 16 12 8 4 0

** Consult Amphenol, Sidney, NY for service rating of power contacts.

ACA-B/GT Connectors
contact arrangements

front face of pin insert or rear face of socket insert illustrated

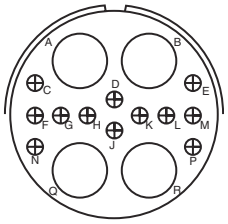

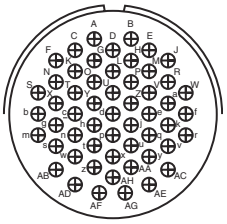

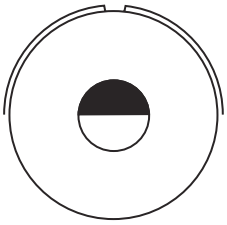

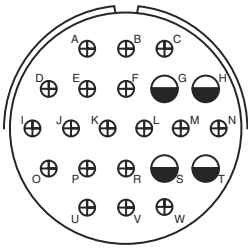

Insert Arrangement	**32-82**	**32-AF**	**32-AM**	**36-1**
Service Rating	**A**	**A**	**A**	**D**
Number of Contacts	**4 12**	**55**	**1**	**4 18**
Contact Size	**4 16**	**16**	**4/0**	**12 16**

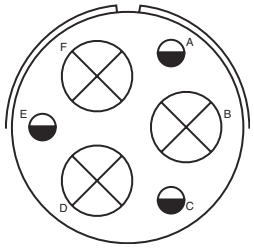

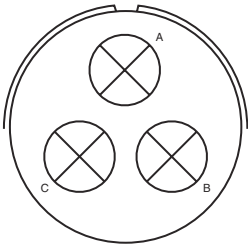

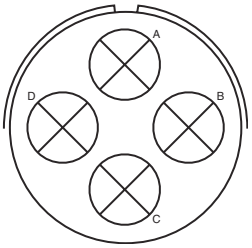

Insert Arrangement	**36-3**	**36-4**	**36-5**
Service Rating	**D**	**A = D; B, C = A**	**A**
Number of Contacts	**3 3**	**3**	**4**
Contact Size	**0 12**	**0**	**0**

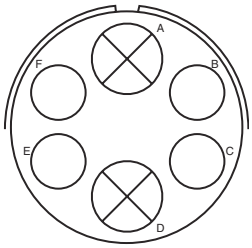

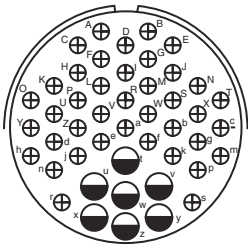

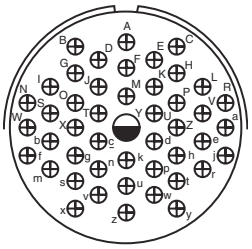

Insert Arrangement	**36-6**	**36-7**	**36-8**
Service Rating	**A**	**A**	**A**
Number of Contacts	**2 4**	**7 40**	**1 46**
Contact Size	**0 4**	**12 16**	**12 16**

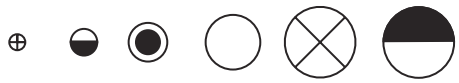

CONTACT LEGEND **16 12 8 4 0 4/0**

.

ACA-B/GT Connectors
contact arrangements

front face of pin insert or rear face of socket insert illustrated

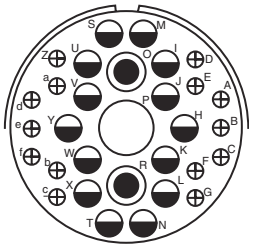

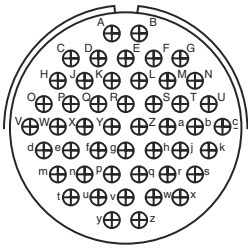

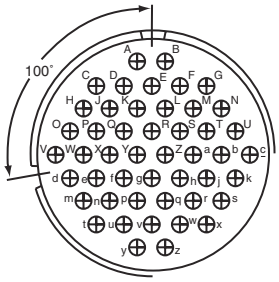

100° Rotation of 36-10

Insert Arrangement	**36-9**	**36-10**	**36-11**
Service Rating	**A**	**A**	**A**
Number of Contacts	**1 2 14 14**	**48**	**48**
Contact Size	**4 8 12 16**	**16**	**16**

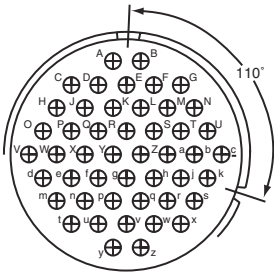

110° Rotation of 36-10

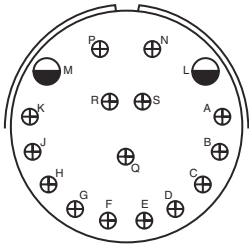

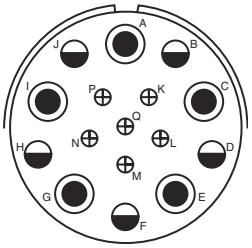

Insert Arrangement	**36-12**	**36-13**	**36-14**
Service Rating	**A**	**N, P, Q = E; Bal. = A**	**D**
Number of Contacts	**48**	**2 15**	**5 5 6**
Contact Size	**16**	**12 16**	**8 12 16**

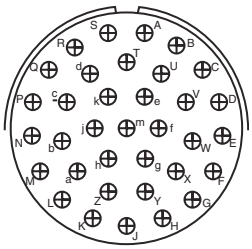

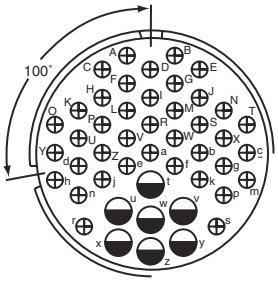

100° Rotation of 36-7

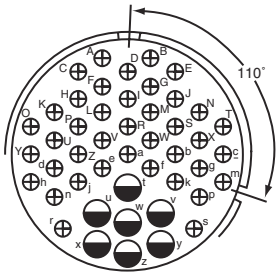

110° Rotation of 36-7

Insert Arrangement	**36-15**	**36-16**	**36-17**
Service Rating	**M = D; Bal. = A**	**A**	**A**
Number of Contacts	**35**	**7 40**	**7 40**
Contact Size	**16**	**12 16**	**12 16**

CONTACT LEGEND **16 12 8 4 0**

ACA-B/GT Connectors
contact arrangements

front face of pin insert or rear face of socket insert illustrated

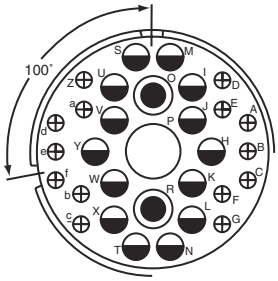

100° Rotation
of 36-9

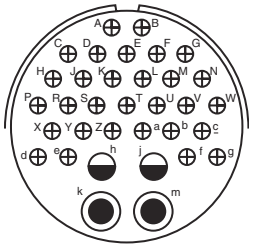

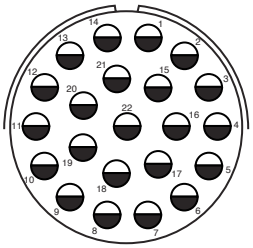

Insert Arrangement	**36-18**	**36-20**	**36-22**
Service Rating	**A**	**A**	**D**
Number of Contacts	**1 2 14 14**	**2 2 30**	**22**
Contact Size	**4 8 12 16**	**8 12 16**	**12**

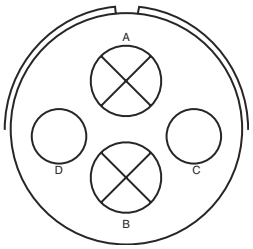

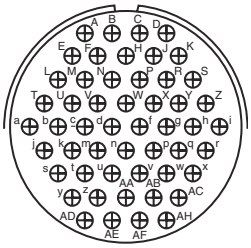

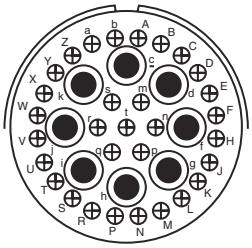

Insert Arrangement	**36-51**	**36-52**	**36-54**
Service Rating	**D**	**A**	**A**
Number of Contacts	**2 2**	**52**	**8 31**
Contact Size	**0 4**	**16**	**8 16**

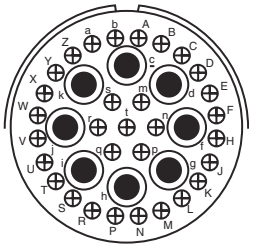

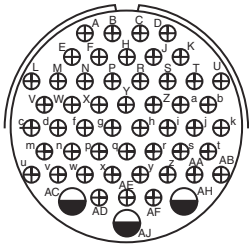

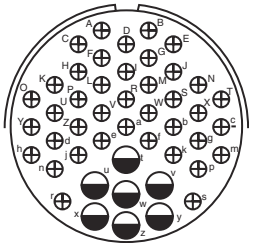

Insert Arrangement	**36-55**	**36-59**	**36-60**
Service Rating	**A**	**A**	**A**
Number of Contacts	**31 8**	**50 3**	**40 7**
Contact Size	**16 8 for #6 wire**	**16 12 for #10 wire**	**16 12 for #10 wire**

CONTACT LEGEND **16 12 8 4 0**

ACA-B/GT Connectors
contact arrangements

front face of pin insert or rear face of socket insert illustrated

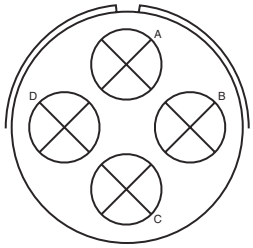

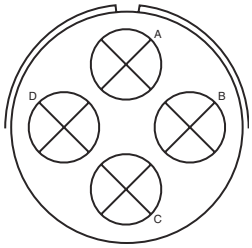

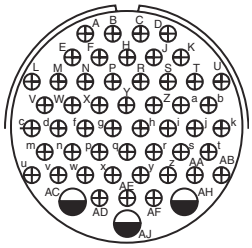

Insert Arrangement	**36-64**	**36-65**	**36-71**
Service Rating	**–**	**–**	**A**
Number of Contacts	**4**	**4**	**3 50**
Contact Size	**0 (Coax) RG-11/U RG-12/U, or RG-13/U**	**0 (Coax) RG-59/U, RG-62/U or RG-71/U**	**12 16**

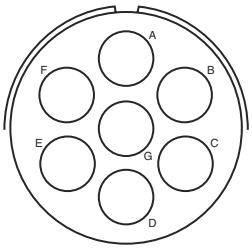

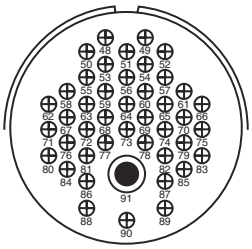

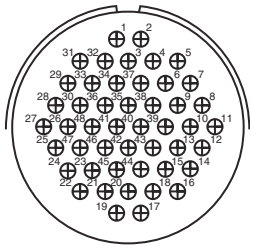

Insert Arrangement	**36-73**	**36-74**	**36-75**
Service Rating	**–**	**A**	**A**
Number of Contacts	**7**	**43 1**	**48**
Contact Size	**4 (Coax) RG-62B/U**	**16 8 (Coax) RG-187/B**	**16 for #14 wire**

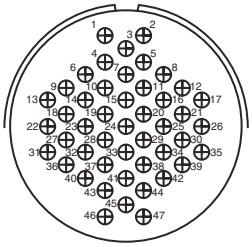

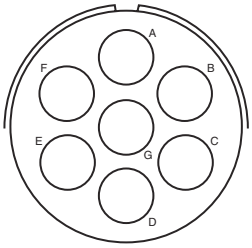

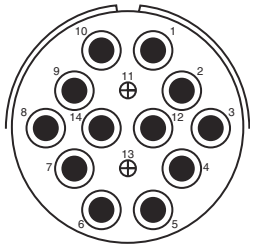

Insert Arrangement	**36-76**	**36-77**	**36-78**
Service Rating	**A**	**D**	**A**
Number of Contacts	**47**	**7**	**2 12**
Contact Size	**16**	**4**	**16 8**

CONTACT LEGEND **16 12 8 4 0**

ACA-B/GT Connectors
contact arrangements

front face of pin insert or rear face of socket insert illustrated

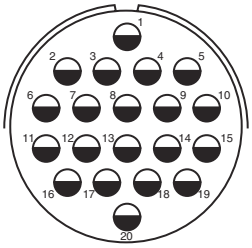

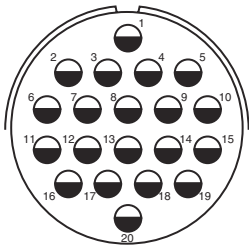

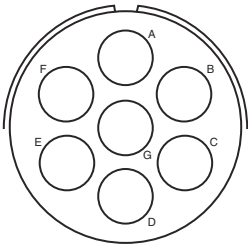

Insert Arrangement	**36-79**	**36-80**	**36-83**
Service Rating	**A**	**A**	**–**
Number of Contacts	**20**	**20**	**7**
Contact Size	**12**	**12 for #10 wire**	**4 (Coax) RG-58/U**

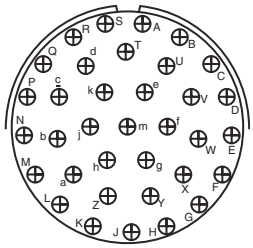

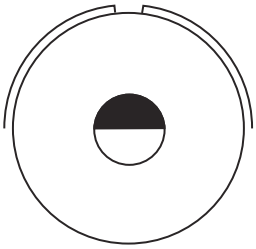

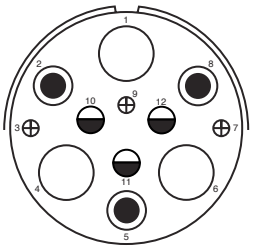

Insert Arrangement	**36-85**	**36-97**	**36-99**
Service Rating	**M = D; Bal. = A**	**C**	**D**
Number of Contacts	**35**	**1**	**3 3 3 3**
Contact Size	**16 for #12 wire**	**4/0**	**4 8 12 16**

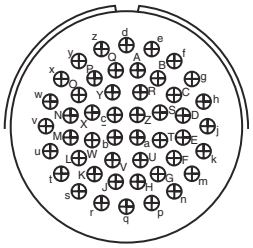

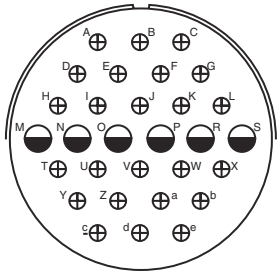

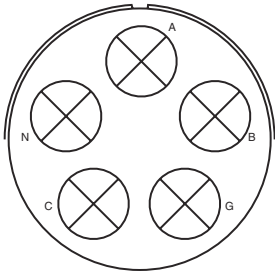

Insert Arrangement	**36-AF**	**40-1**	**40-5**
Service Rating	**A**	**D**	**A**
Number of Contacts	**48**	**6 24**	**5**
Contact Size	**16**	**12 16**	**0**

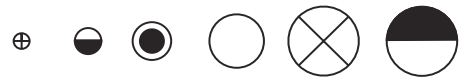

CONTACT LEGEND **16 12 8 4 0 4/0**

ACA-B/GT Connectors
contact arrangements

front face of pin insert or rear face of socket insert illustrated

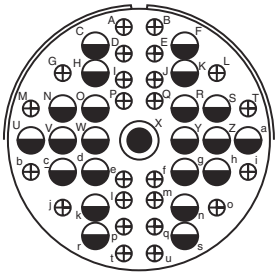

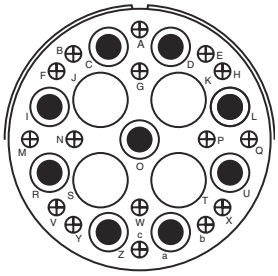

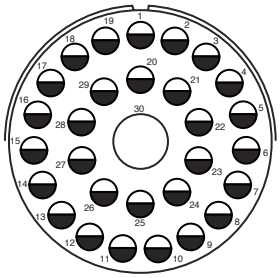

Insert Arrangement	**40-9**			**40-10**			**40-30**	
Service Rating	**A**			**A**			**A**	
Number of Contacts	**1**	**22**	**24**	**4**	**9**	**16**	**29**	**1**
Contact Size	**8**	**12**	**16**	**4**	**8**	**16**	**12**	**4**

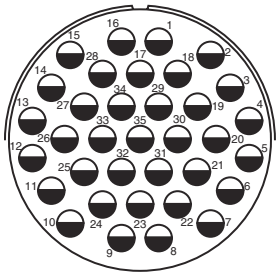

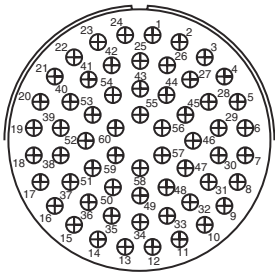

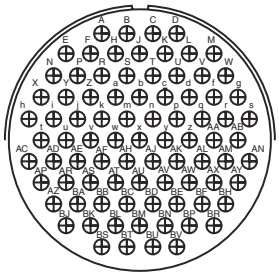

Insert Arrangement	**40-35**	**40-53**	**40-56**
Service Rating	**D**	**A**	**A**
Number of Contacts	**35**	**60**	**85**
Contact Size	**12**	**16**	**16**

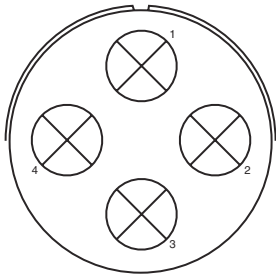

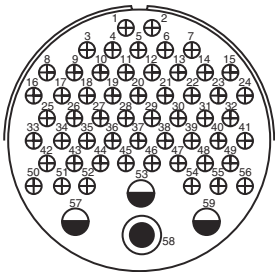

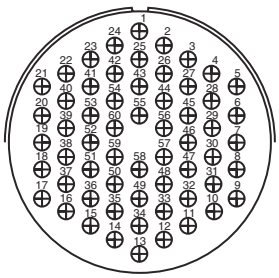

Insert Arrangement	**40-57**	**40-61**			**40-62**	
Service Rating	**E**	**A**			**A**	
Number of Contacts	**4**	**1**	**3**	**55**	**60**	
Contact Size	**0**	**8**	**12**	**16**	**16**	

CONTACT LEGEND	**16**	**12**	**8**	**4**	**0**

ACA-B/GT Connectors
contact arrangements

front face of pin insert or rear face of socket insert illustrated

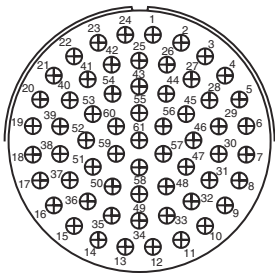

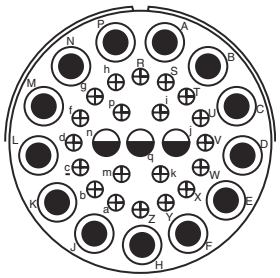

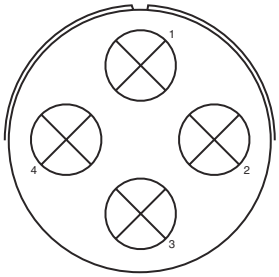

Insert Arrangement	**40-63**	**40-64**	**40-66**
Service Rating	**A**	**–**	**–**
Number of Contacts	**61**	**3 20 13**	**4**
Contact Size	**16 for #14 wire**	**12 16 8 (Coax) RG-124/U**	**0 (Coax) RG-63 B/U**

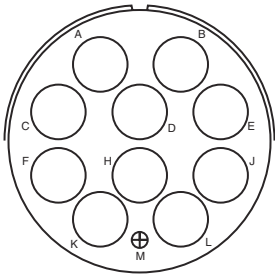

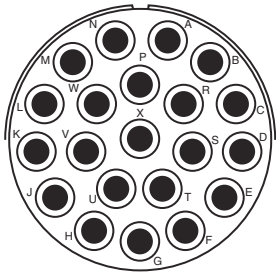

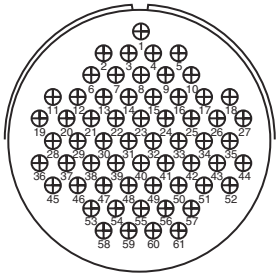

Insert Arrangement	**40-67**	**40-68**	**40-70**
Service Rating	**A**	**A**	**A**
Number of Contacts	**1 10**	**21**	**61**
Contact Size	**16 4 (Coax) RG-59/U**	**8**	**16**

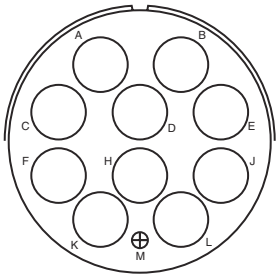

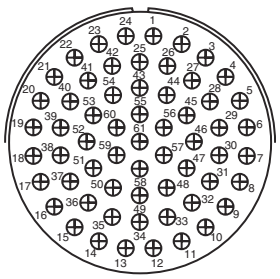

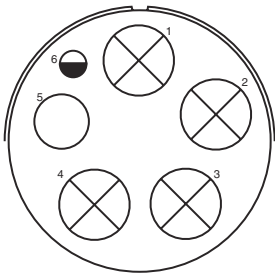

Insert Arrangement	**40-72**	**40-73**	**40-74**
Service Rating	**A**	**A**	**A**
Number of Contacts	**1 10**	**61**	**1 1 4**
Contact Size	**8 4 (Coax) RG-9B/U**	**16**	**12 4 (Coax) RG-62/U 0 (Coax) RG-9B/U or RG-214/U**

CONTACT LEGEND **16 12 8 4 0**

ACA-B/GT Connectors
contact arrangements

front face of pin insert or rear face of socket insert illustrated

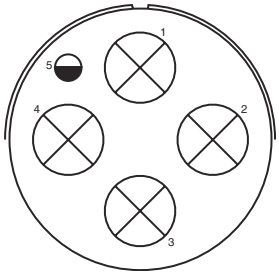

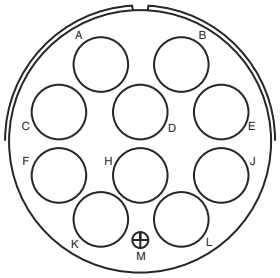

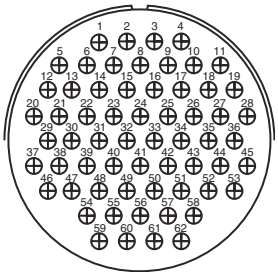

Insert Arrangement	**40-75**	**40-80**	**40-81**
Service Rating	**E**	**A**	**A**
Number of Contacts	**4 1**	**10 1**	**62**
Contact Size	**0 12**	**4 16**	**16 for #14 wire**

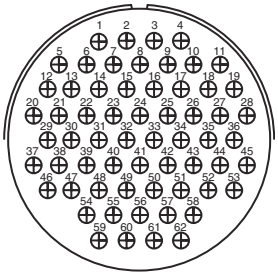

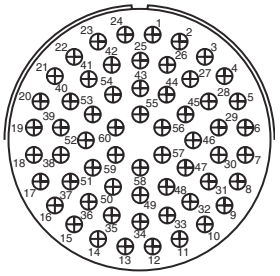

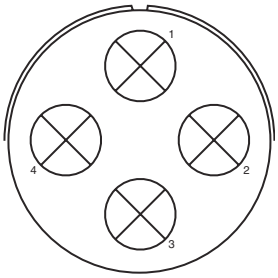

Insert Arrangement	**40-82**	**40-85**	**40-86**
Service Rating	**A**	**A**	**–**
Number of Contacts	**62**	**60**	**4**
Contact Size	**16**	**16 for #14 wire**	**0 (Coax) RG-115A/U**

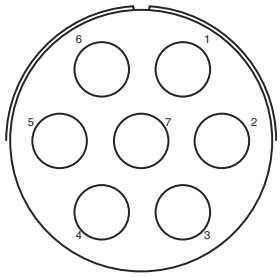

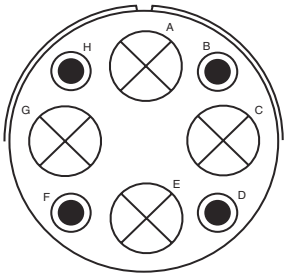

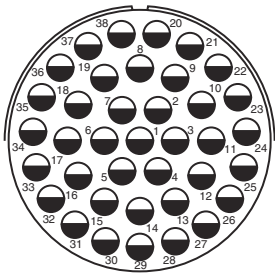

Insert Arrangement	**40-87**	**40-AD**	**40-AG**
Service Rating	**D**	**A**	**A**
Number of Contacts	**7**	**4 4**	**38**
Contact Size	**4**	**0 8**	**12**

CONTACT LEGEND 16 12 8 4 0

ACA-B/GT Connectors
contact arrangements

front face of pin insert or rear face of socket insert illustrated

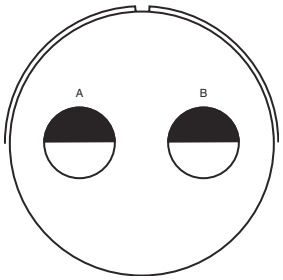

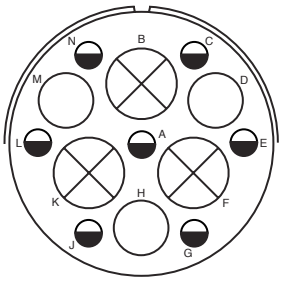

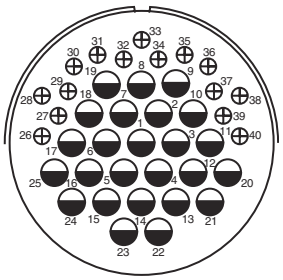

Insert Arrangement	**40-AP**	**40-AR**	**40-AS**
Service Rating	**E**	**Inst.**	**A**
Number of Contacts	**2**	**3 3 7**	**25 15**
Contact Size	**4/0**	**0 4 12**	**12 16**

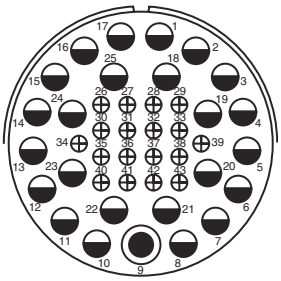

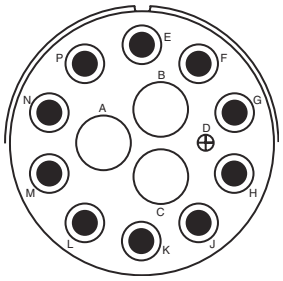

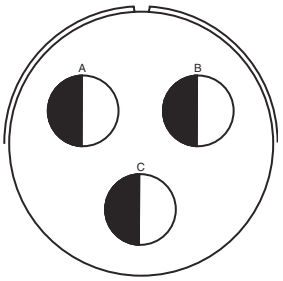

Insert Arrangement	**40-AT**	**40-AU**	**40-AV**
Service Rating	**A**	**A**	**D**
Number of Contacts	**1 24 18**	**3 10 1**	**3**
Contact Size	**8 12 16**	**4 8 16**	**2/0**

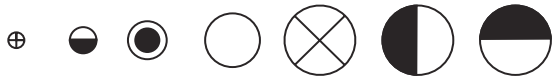

CONTACT LEGEND **16 12 8 4 0 2/0 4/0**

Amphenol® ACA-B Connectors

how to order, connector intermateability

Part Number System
(example part number shown)

ACA	3101	E	10SL-3	P	W	B	(F80)
1	2	3	4	5	6	7	8

1. **Connector Series**
   ACA designates Amphenol® ACA-B Reverse Bayonet Series
2. **Shell Style**
   3101 - Cable connecting receptacle
   3102 - Box mount receptacle (Class E only, see sect. 3)
   3103 - Wall mount receptacle for rear panel mounting
   3106 - Straight plug
   3107 - Jam nut receptacle - rear panel mount (Class A only, see sect. 3)
   3108 - 90° angle plug
3. **Connector Class**
   A Environmental, no rear threads (Applies to 3107 only)
   E Environmental resisting, with grommet seal and strain relief backshell
   F Environmental resisting, with grommet seal and solid backshell with rear accessory threads
   G Backshell for heat shrink termination
   R Environmental resisting with lightweight endbell
4. **Shell Size and Insert Arrangement**
   See pages 48-50 for insert availability charts, and pages 55-77 for insert pattern drawings.
5. **Contact Style**
   P designates pin contacts
   S designates socket contacts
   Note: standard contacts are silver plated. Consult Connector Modification for ordering gold plated contacts.
6. **Alternate Position**
   W, X, Y and Z - See page 51.
   No suffix required for normal position.
7. **Designation for Reverse Bayonet**
   B designates Reverse Bayonet coupling shells
8. **Connector Modification**
   Omit for standard olive drab connectors with solder type silver plated contacts.
   For a modification as listed below, add suffix in parenthesis to the end of the part number. Consult Amphenol Industrial Operations for further description or assistance.

   (RDS) with RADSOK® contacts (crimp sockets only)*
   (F80) with AWG crimp contacts
   (FO) less contacts. (contacts are to be ordered separately)
   (A176) gold contacts
   (T00) metric threads in flange holes
   (RFI) grounded - plug only
   (F42) less grommet and backshell
   (F85) less sleeve and grommet
   (A23) electroless nickel plating
   (A232) with black zinc cobalt plating
   (072) gray zinc nickel **NEW**

   * Consult page 54 for RADSOK® Technology Advantages.

MATEABILITY WITH IDENTICAL CONTACT ARRANGEMENTS

Connector Style	Mateable with Style
ACA3101	ACA 3106, 3108
ACA3102	ACA 3106, 3108
ACA3103	ACA 3106, 3108
ACA3106	ACA 3101, 3102, 3103, 3107
ACA3107	ACA 3106, 3108
ACA3108	ACA 3101, 3102, 3103, 3107

This catalog is on the Amphenol website:
www.amphenol-industrial.com.

See **www.amphenol-industrial.com** for the broad range of interconnection products offered by Amphenol.

GT Connectors
how to order, connector intermateability

Part Number System

GT	C	00	A	FF	36-5	P	W	(014)
	1	2	3	4	5	6	7	8

1. **Contact Style and Insert Material**
   C = Crimp
   CN = Crimp with stainless steel
   S = Solder
   SN = Solder with stainless steel
   CY = Crimp with Viton
   SY = Solder with Viton
   CL = Crimp with low smoke/flame retardant inserts
   SL = Solder with low smoke/flame retardant inserts
   No designation required for Neoprene components
2. **Shell Style**
   01 - Inline receptacle
   02 - Box mount receptacle
   030 - Square flange receptacle - rear panel mount
   05 - Dummy receptacle
   06 - Straight plug
   07 - Jam nut receptacle - rear panel mount
   070 - Jam nut receptacle with accessory threads
   08 - 90° angle plug
   TB - Thru-bulkhead receptacle
3. **Connector Class - For details, see pages 20-47**
   A - Adapter for accessory attachment, non-environmental
   AF - Adapter, clamp for individual wires, non-environmental
   AMI - Threaded internal adapter. Thread style/size to be specified at the end of the PN - Ex (M20) or (PG21)
   CF - Adapter, jacketed cable clamp, environmental
   CFZ - Adapter, jacketed cable clamp, individual wire sealing grommet, environmental
   F - Adapter, clamp for individual wires, individual wire sealing grommet, environmental.
   G - Adapter for heat shrink tubing, individual wire sealing grommet, environmental
   GTTB - Thru bulkhead receptacle, accepts mating plug on both sides
   R - Adapter for accessory attachment, individual wire sealing grommet, environmental
   R - (02) No thread, no accessories, environmental with panel sealing gasket
   RMI - Threaded internal adapter with individual wire sealing grommet. Thread style/size to be specified at the end of the PN - Es (M20) or (PG21)
   RV - Adapter, individual wire sealing grommet, environmental
   SB - Adapter for termination of EMI/RFI shielded braid with heat shrink tubing or boot, individual wire sealing grommet, environmental
4. **Designation for Mounting Hole - Receptacle Only**
   FF - UN Threads
   FM - Metric Threads
   No designation for standard through hole mounting holes.
5. **Shell Size and Arrangement**
   See pages 48-50
6. **Contact Style**
   P designates pin contacts
   S designates socket contacts
7. **Alternate Position**
   W, X, Y and Z - See page 51.
   No suffix required for normal position.
8. **Connector Modification***
   Omit for standard olive drab with silver plated contacts
   i.e.: (A31) Gold/nickel plated contacts
   (025) Black zinc cobalt
   (LC) Less contacts
   (072) Gray Zinc Nickel
   (116) Solder contacts less pre-filled solder
   (724) Gray Zinc Nickel with solder contacts less pre-filled solder **RoHS Compliant**
   (RDS) RADSOK® contacts (crimp sockets only)*

* Consult page 54 for RADSOK® Technology Advantages.

MATEABILITY WITH IDENTICAL CONTACT ARRANGEMENTS

Connector Style	Mateable with Style
GT01	GT06 / 062 / 064 / 065 / 08
GT02	GT06 / 08
GT030	GT06 / 08
GT06	GT01 / 02 / 030 / 05 / 070 / TB
GT07 / 070	GT06 / 08
GT08	GT01 / 02 / 030 / 05 / 070 / TB
GTTB	GT06 / 08

ACA-B/GT Connectors – accessories

10-40450, 10-36675, 10-580649 sealing gaskets

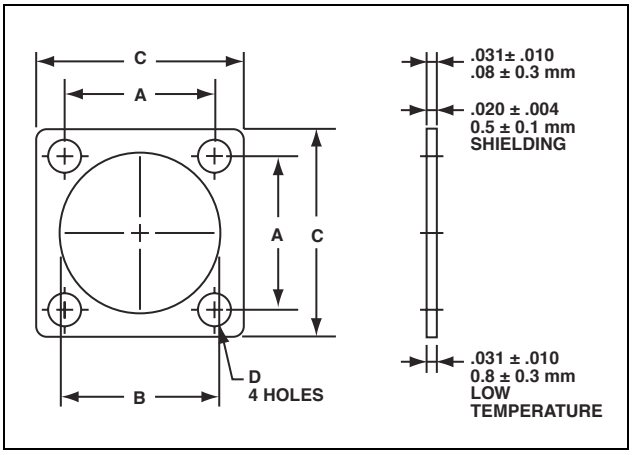

PLAIN FLAT GASKET
The Amphenol® plain flat gasket of synthetic rubber material is provided to take complete advantage of waterproof and pressure sealing features. It is for use with the flange mounted receptacle.

SHIELDING GASKET
This flat gasket is provided to give the maximum in connector performance. Its special feature is in providing the maximum radio shielding under difficult conditions of high receiver sensitivity and low signal strength while retaining the sealing characteristics of the plain gasket. This gasket is for use with the flange mounting receptacle.

LOW TEMPERATURE GASKET
This gasket is provided for applications where the major requirement is resistance to the injurious effects of extremely low temperature. Even at temperatures as low as –67°F this gasket retains its resiliency and will seal a pressure differential of 30 psi.

Additional versions of gaskets are available including low smoke zero halogen, and also high temperature and conductive types. Consult Amphenol Industrial Operations, Sidney NY, for further information.

Installation Dimensions					
MS Shell Size	A ± .010	Front Panel Versions B + .016 – .000	Rear Panel Version B + .016 – .000	C + .016 – .000	D ± .010
10SL	.719	.625	.724	1.000	.172
14S	.906	.875	.976	1.188	.172
16S	.969	1.000	1.087	1.281	.172
16	.969	1.000	1.087	1.281	.172
18	1.063	1.125	1.220	1.375	.203
20	1.156	1.250	1.354	1.500	.203
22	1.250	1.375	1.480	1.625	.203
24	1.375	1.500	1.618	1.750	.203
28	1.563	1.750	1.846	2.000	.203
32	1.750	2.000	2.110	2.250	.219
36	1.938	2.188	2.354	2.500	.219
40	2.188	2.438	2.587	2.750	.219

Installation Dimensions					
MS Shell Size	A ± 0.2	Front Panel Versions B + 0.4 – 0.0	Rear Panel Version B + 0.4 – 0.0	C + 0.4 – 0.0	D ± 0.2
10SL	18.2	15.9	18.4	25.4	4.36
14S	23.0	22.2	24.8	30.2	4.36
16S	24.6	25.4	27.6	32.5	4.36
16	24.6	25.4	27.6	32.5	4.36
18	27.0	28.57	31.0	35.0	5.15
20	29.4	31.75	34.4	38.1	5.15
22	31.8	34.9	37.6	41.2	5.15
24	34.9	38.1	41.1	44.5	5.15
28	39.7	44.45	46.9	50.8	5.15
32	44.5	50.8	53.6	57.2	5.56
36	49.2	55.57	59.8	63.5	5.56
40	55.6	61.92	65.7	69.9	5.56

Order Data for Front Panel Mount Gaskets			
Front Panel Plain Version	Front Panel Shielding Version	Front Panel Low Temperature Version	Front Panel Low Smoke ZH Version
10-40450-10	10-40450-10S	10-36675-10	LS-40450-10
10-40450-14	10-40450-14S	10-36675-14	LS-40450-14
10-40450-16	10-40450-16S	10-36675-16	LS-40450-16
10-40450-18	10-40450-18S	10-36675-18	LS-40450-18
10-40450-20	10-40450-20S	10-36675-20	LS-40450-20
10-40450-22	10-40450-22S	10-36675-22	LS-40450-22
10-40450-24	10-40450-24S	10-36675-24	LS-40450-24
10-40450-28	10-40450-28S	10-36675-28	LS-40450-26
10-40450-32	10-40450-32S	10-36675-32	LS-40450-32
10-40450-36	10-40450-36S	10-36675-36	LS-40450-36
10-40450-40	10-40450-40S	10-36675-40	LS-40450-40

Order Data for Rear Panel Mount Gaskets	
Rear Panel Plain Version	Rear Panel Low Smoke ZH Version
10-580649-11	LS-580649-11
10-580649-14	LS-580649-14
10-580649-16	LS-580649-16
10-580649-18	LS-580649-18
10-580649-20	LS-580649-20
10-580649-22	LS-580649-22
10-580649-24	LS-580649-24
10-580649-28	LS-580649-28
10-580649-32	LS-580649-32
10-580649-36	LS-580649-36
10-580649-40	LS-580649-40

ACA-B/GT Connectors – accessories
receptacle protection caps

- **Protective metal caps which seal the front of receptacles**
- **Includes a chain for retention of the cap at the required location**
- **All ACA( )-B and GT receptacles**

*** 10-580902-XXX**

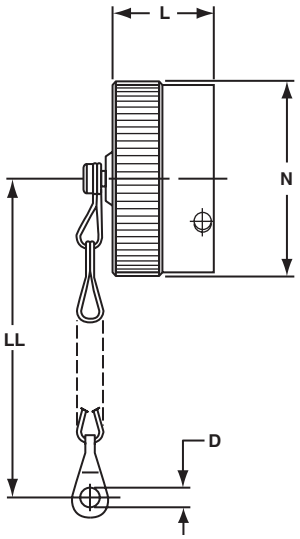

Finish	Suffix
Olive drab cadmium plate	-XX3
Electroless nickel	-XXG
Black zinc cobalt	-XXY
Gray zinc nickel	-XXFL

* To complete order number, add shell size and suffix number. For example, shell size 11 with olive drab cadmium plate would be 10-580902-113.

Table 1: Inches

Shell Size	D + .020 – .000	L Max.	N Max.	LL Approx.
11	.173	.700	.905	5.000
14	.173	.700	1.181	5.000
16	.173	.700	1.280	5.000
17	.173	.900	1.280	5.000
18	.173	.900	1.457	5.000
20	.173	.900	1.594	5.000
22	.173	.900	1.713	5.000
24	.173	.900	1.850	5.000
28	.220	.900	2.126	7.480
32	.261	.900	2.382	7.480
36	.261	.900	2.638	7.480
40	.261	.900	2.874	7.480

Table 2: Millimeters

Shell Size	D + 0.5 – 0.0	L Max.	N Max.	LL Approx.
11	4.4	17.8	23.0	127
14	4.4	17.8	30.0	127
16	4.4	17.8	32.5	127
17	4.4	22.9	32.5	127
18	4.4	22.9	37.0	127
20	4.4	22.9	40.5	127
22	4.4	22.9	43.5	127
24	4.4	22.9	47.0	127
28	5.6	22.9	54.0	190
32	5.6	22.9	60.5	190
36	5.6	22.9	67.0	175
40	5.6	22.9	73.0	190

All dimensions for reference only.

ACA-B/GT Connectors – accessories
plug protection caps

- **Protective metal caps which seal the front of plugs**
- **Includes a chain for retention of the cap at the required location**
- **All ACA( )-B and GT plugs**

*** 10-580903-XXX**

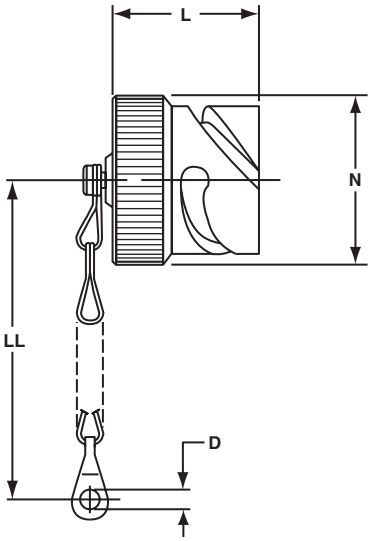

Finish	Suffix
Olive drab cadmium plate	-XX3
Electroless nickel	-XXG
Black zinc cobalt	-XXY
Gray zinc nickel	-XXFL

* To complete order number, add shell size and suffix number. For example, shell size 11 with olive drab cadmium plate would be 10-580903-113.

Table 1: Inches

Shell Size	D + .020 – .000	L Max.	N Max.	LL Approx.
11	.157	.945	.807	5.000
14	.157	.945	1.059	5.000
16	.157	.945	1.169	5.000
17	.157	1.260	1.169	5.000
18	.157	1.260	1.303	5.000
20	.189	1.260	1.437	5.520
22	.189	1.260	1.563	5.520
24	.189	1.260	1.701	5.520
28	.220	1.260	1.929	7.480
32	.261	1.260	2.193	7.480
36	.261	1.260	2.437	7.480
40	.261	1.260	2.665	7.480

Table 2: Millimeters

Shell Size	D + 0.5 – 0.0	L Max.	N Max.	LL Approx.
11	4.0	24	20.5	127
14	4.0	24	26.9	127
16	4.0	24	29.7	127
17	4.0	24	29.7	127
18	4.0	24	33.1	127
20	4.8	32	36.5	140
22	4.8	32	39.7	140
24	4.8	32	43.2	140
28	4.8	32	49.0	190
32	5.6	32	55.7	190
36	5.6	32	61.9	190
40	5.6	32	67.7	190

All dimensions for reference only.

ACA-B/GT Connectors - accessories

rear mounting data, panel cut-out dimensions, sealing plugs, sealing ranges

REAR MOUNTING DATA
MAXIMUM PANEL THICKNESS

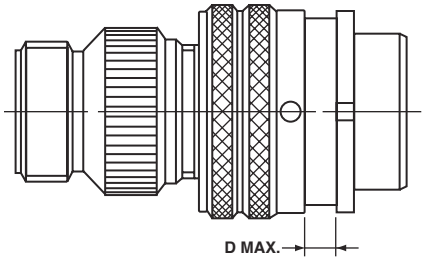

Size	Dimension D			
	GT00/020		GT030	
	Inches	(mm)	Inches	(mm)
10SL	.146	3.70	.303	7.70
14S	.146	3.70	.303	7.70
16S	.146	3.70	.303	7.70
16	.145	3.70	.242	6.15
18	.145	3.70	.303	7.70
20	.145	3.70	.303	7.70
22	.145	3.70	.303	7.70
24	.207	5.25	.303	7.70
28	.207	5.25	.343	8.70
32	.241	6.10	.309	7.85
36	.241	6.10	.309	7.85
40	.237	6.02	.309	7.85

SEALING PLUG
10-405996-XX

Sealing plugs are used to fill unused holes in multi-holed grommet configurations.

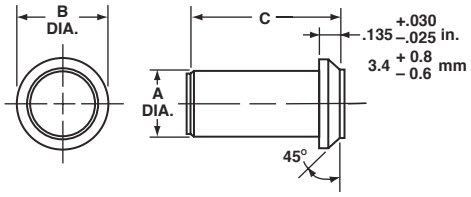

Order No.	Contact Size	Wire Size	Color Code	Inches		
				A Dia. ±.010	B ±.005	C ±.010
10-405996-16	16	20-16	Blue	.083	.133	.564**
10-405996-12	12	14-12	Yellow	.121	.171	.564**
10-405996-8	8	10-8	Red	.185	.315	.470
10-405996-4	4	4-6	Blue	.310	.415	.470
10-405996-0	0	0-2	Yellow	.440	.605	1.000

Millimeters		
A Dia. ± 0.2	B ± 0.1	C ± 0.2
2.1	3.4	14.3***
3.1	4.3	14.3***
4.7	8.0	11.9
7.9	10.5	11.9
11.2	15.4	25.4

** ± .020 (in.) *** ± 0.5 (mm)

GROMMET HOLE
SEALING RANGES

Hole Size	Sealing Range	
	(mm)	Inches
16	1.62 – 3.3	.064 – .130
12	2.89 – 4.31	.114 – .170
8	4.16 – 6.47	.164 – .255
4	6.9 – 9.3	.272 – .370
0	10.5 – 13.97	.415 – .550

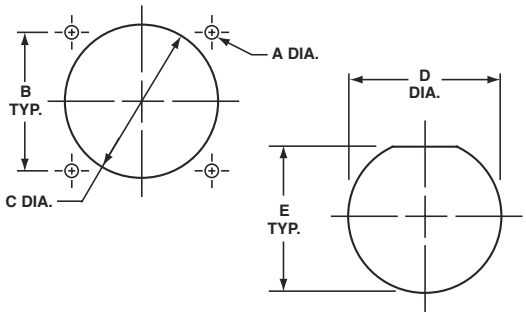

PANEL CUT-OUT DIMENSIONS

Shell Size	A Dia. Hole Size	Connector Styles				
		02, 020, 00, 030	Front Mount 02, 00, 020	Rear Mount 030	Jam Nut 070	Jam Nut 070
		B ±.004	C Dia.	C Dia.	D Dia.	E
10SL	.126	.717	11/16	1 3/4	7/8	.83
14S	.126	.906	13/16	1	1 1/8	1.08
16S/16	.126	.969	15/16	1 1/8	1 1/14	1.21
18	.126	1.063	1 1/16	1 1/4	1 3/8	1.32
20	.126	1.157	1 3/16	1 3/8	1 1/2	1.45
22	.126	1.252	1 5/16	1 1/2	1 5/8	1.57
24	.146	1.374	1 7/16	1 5/8	1 3/4	1.70
28	.146	1.563	1 11/16	1 7/8	2	1.95
32	.169	1.752	1 15/16	2 1/8	2 1/4	2.20
36	.169	1.937	2 1/8	2 3/8	2 1/2	2.45
40	.169	2.185	2 3/8	2 5/8	2 3/4	2.70

All dimensions for reference only.

GT Connectors – accessories

MS3057-A style cable clamp

- **Concentric cable clamps, insure strain relief and central location of the cable**
- **Can be used with bushing MS3420**

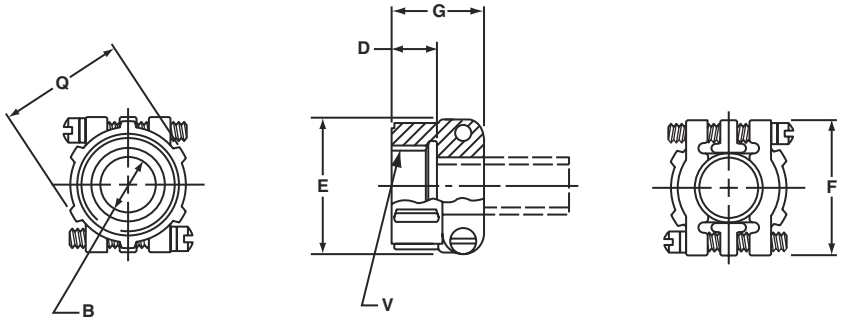

Inches

Part Number	Used with Shell Size	Used with Bushing	B	D	G	F	V Thread Class 2B
97-3057-1004	10SL	MS3420-4	.315	.395	.812	.866	.6250-24 UNEF
97-3057-1007	14S	MS3420-6	.442	.395	.875	1.063	.7500-20 UNEF
97-3057-1008	16 - 16S	MS3420-8	.568	.395	.945	1.145	.8750-20 UNEF
97-3057-1010	18	MS3420-10	.633	.395	.945	1.244	1.0000-20 UNEF
97-3057-1012	20 - 22	MS3420-12	.758	.395	.945	1.475	1.1875-18 UNEF
97-3057-1016	24 - 28	MS3420-16	.948	.395	1.031	1.700	1.4375-18 UNEF
97-3057-1020	32	MS3420-20	1.256	.460	1.094	2.055	1.7500-18 UNS
97-3057-1024	36	MS3420-24	1.380	.520	1.157	2.265	2.0000-18 UNS
10-824810-028	40	MS3420-28	1.625	.520	1.685	2.683	2.2500-16 UN

Millimeters

Part Number	Used with Shell Size	Used with Bushing	B	D	G	F
97-3057-1004	10SL	MS3420-4	8.0	10.0	20.6	22
97-3057-1007	14S	MS3420-6	11.0	10.0	22.2	27
97-3057-1008	16 - 16S	MS3420-8	14.4	10.0	24.0	29
97-3057-1010	18	MS3420-10	16.1	10.0	24.0	32
97-3057-1012	20 - 22	MS3420-12	19.2	10.0	24.0	37
97-3057-1016	24 - 28	MS3420-16	24.1	10.0	26.2	43
97-3057-1020	32	MS3420-20	31.9	11.7	27.8	52
97-3057-1024	36	MS3420-24	35.0	13.2	29.4	58
10-824810-028	40	MS3420-28	41.3	13.2	42.8	68

All dimensions for reference only.

GT Connectors – accessories
MS3420 bushing

- **Bushing of synthetic rubber to be used with cable clamps for protection of the cable or wires**
- **Can be telescoped for smaller cable diameters**

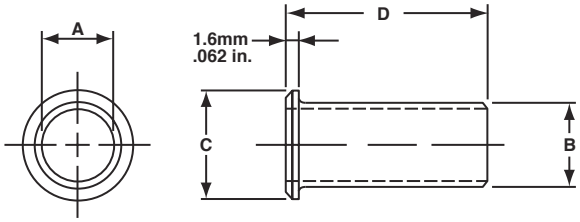

Inches

Part Number	Used with Cable Clamp	A	B	C	D
MS3420-3	M85049/41-3A	.130	.210	.379	2.875
MS3420-4	M85049/41-4A	.220	.302	.505	2.750
MS3420-6	M85049/41-6A	.312	.427	.619	2.625
MS3420-8	M85049/41-8A	.437	.552	.744	2.500
MS3420-10	M85049/41-10A	.562	.615	.889	2.375
MS3420-12	M85049/41-12A	.625	.740	1.084	2.250
MS3420-16	M85049/41-16A	.750	.927	1.314	2.125
MS3420-20	M85049/41-20A	.937	1.240	1.598	2.000
MS3420-24	M85049/41-24A	1.250	1.365	1.847	1.875
MS3420-28	M85049/41-28A	1.375	1.614	2.085	1.750

Millimeters

Part Number	Used with Cable Clamp	A	B	C	D
MS3420-3	M85049/41-3A	3.30	5.3	9.60	73.0
MS3420-4	M85049/41-4A	5.58	7.7	12.80	69.8
MS3420-6	M85049/41-6A	7.92	10.8	15.70	66.8
MS3420-8	M85049/41-8A	11.09	14.0	18.90	63.5
MS3420-10	M85049/41-10A	14.27	15.6	22.58	60.3
MS3420-12	M85049/41-12A	15.87	18.8	27.50	57.1
MS3420-16	M85049/41-16A	19.05	23.5	33.40	53.9
MS3420-20	M85049/41-20A	23.79	31.5	40.60	50.8
MS3420-24	M85049/41-24A	31.75	34.7	46.90	47.6
MS3420-28	M85049/41-28A	34.92	41.0	52.90	44.4

All dimensions for reference only.

GT Connectors – accessories

MS3057-C style (10-350349) cable clamp

- **Waterproof clamp for jacketed cables**
- **Provides mechanical strain relief plus concentric clamping over a wide range of cable sizes**
- **A neoprene* gland seal ensures a waterproof seal on the cable jacket**

* Other materials available

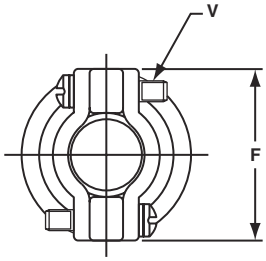

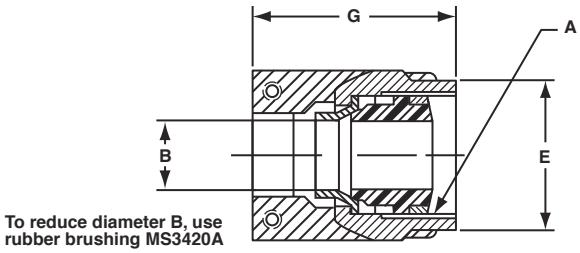

Part Number	Used with Shell Size	A Thread Class 2B in inches	V Thread Class 2A in inches	Used with Bushing	Bushing Opening Inches		Busing Opening Millimeters	
					Open	Closed	Open	Closed
10-350349-123	10SL	.6250-24 UNEF	6-32 UNC	MS3420-4A	.219	.010	5.56	0.25
10-350349-143	14S	.7500-20 UNEF	6-32 UNC	MS3420-6A MS3420-4A	.312 .219	.114 .020	7.93 5.56	2.89 0.50
10-350349-163	16 & 16S	.8750-20 UNEF	6-32 UNC	MS3420-8A MS3420-6A	.437 .312	.220 .085	11.10 7.93	5.60 2.15
10-350349-183	18	1.0000-20 UNEF	6-32 UNC	MS3420-10A MS3420-6A	.437 .312	.197 .085	11.10 7.93	5.00 2.15
10-350349-203	20 & 22	1.1875-18 UNEF	8-32 UNC	MS3420-12A MS3420-8A	.541 .437	.270 .177	13.74 11.10	6.85 4.50
10-350349-243	24 & 28	1.4375-18 UNEF	8-32 UNC	MS3420-16A MS3420-12A MS3420-8A	.748 .541 .437	.429 .260 .186	19.00 13.74 11.10	10.90 6.60 4.72
10-350349-323	32	1.7500-18 UNS	.250-20 UNC	MS3420-20A MS3420-16A MS3420-12A	.937 .748 .541	.620 .441 .273	23.80 19.00 13.74	15.74 11.20 6.93
10-350349-363	36	2.0000-18 UNS	.250-20 UNC	MS3420-24A MS3420-20A MS3420-16A	1.122 .937 .748	.681 .504 .358	28.50 23.80 19.00	17.30 12.80 9.10
10-350349-403	40	2.2500-16 UN	.250-20 UNC	MS3420-28A MS3420-20A MS3420-16A	1.250 .937 .748	.815 512 368	31.75 23.80 19.00	20.70 13.00 9.34

Inches

Part Number	Used with Shell Size	B		E ± .016	F ± .008	G + .020 − .000
		Open	Closed			
10-350349-123	10SL	.312	.094	.748	.890	1.272
10-350349-143	14S	.438	.230	.874	1.016	1.272
10-350349-163	16 & 16S	.531	.315	1.000	1.106	1.272
10-350349-183	18	.625	.378	1.122	1.220	1.390
10-350349-203	20 & 22	.748	.445	1.311	1.469	1.406
10-350349-243	24 &28	.937	.610	1.559	1.654	1.516
10-350349-323	32	1.250	.921	1.874	2.126	1.764
10-350349-363	36	1.378	.921	2.122	2.248	2.031
10-350349-403	40	1.624	1.177	2.374	2.500	2.031

Millimeters

B		E ± 0.4	F ± 0.2	G + 0.5 − 0.0
Open	Closed			
7.93	2.38	19.0	22.6	32.3
11.12	5.84	22.2	25.8	32.3
13.48	8.00	25.4	28.1	32.3
15.87	9.60	28.5	31.0	35.3
19.00	11.30	33.3	37.3	35.7
23.80	15.50	39.6	42.0	38.5
31.75	23.40	47.6	54.0	44.8
35.00	23.40	53.9	57.1	51.6
41.25	29.90	60.3	63.5	51.6

All dimensions for reference only.

ACA-B/GT accessories
glands

Nylon Cable Glands

Material: Nylon 66 (UL Approved 94V-2)
Seal Ring: UL 94V-2(UL Approved 94V-2)
Thread Type: Metric , PG, NPT
Temp Range: Static: - 40°C ~ +100°C
Dynamic: - 20°C ~ + 80°C
Short Term: +120°C
Current Colors: Gray, Black

Metal Cable Glands

Material: Brass with Nickel; Brass with Tin/Nickel
Clamping: UL approved PA6, 94V-0
Seal Ring: UL 94V-2 (UL approved NBR, 94V-2;UL approved DOW CORNING RUBBER, 94V-0
Thread Type: Metric, PG, NPT
Protective: IP68 (tighten with o-ring)
Temp Range: - 40°C ~ +100°C

Torque Value (N-M) of hex and cap nuts: 3.0-4.5 N-M
M12, M16, M20 are UL recognized under file # E339605

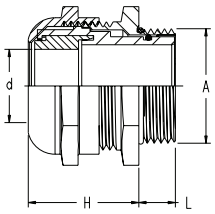

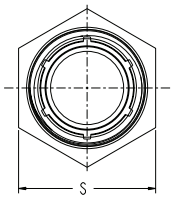

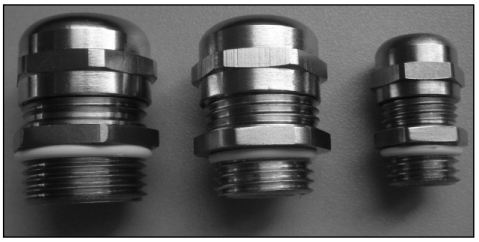

Nylon Cable Glands

AIGO Part	Thread "A"	Max "d" (mm)	Cable Range (mm)	Thread "L" (mm)	Clamp "H" (mm)	Spanner "S" (mm)
AIO-CSM12	M12x1.5	8	3 – 6.5	8	20	15
AIO-CSM16	M16x1.5	8	4 – 8	8	22	19
AIO-CSM18	M18×1.5	10	5 – 10	9	25	22
AIO-CSM20	M20×1.5	12	6 – 12	9	30	24
AIO-CSM22	M22×1.5	14	10 – 14	10	30	27
AIO-CSM24	M24×1.5	14	10 – 14	10	30	27
AIO-CSM25	M25x1.5	18	13 – 18	10	30	33
AIO-CSM30	M30×2.0	18	13 – 18	11	33	33
AIO-CSM32	M32×1.5	25	18 – 25	11	38	42
AIO-CSM33	M33×2.0	25	18 – 25	11	39	42
AIO-CSM40	M40×1.5	32	22 – 32	13	48	54
AIO-CSM50	M50×1.5	38	32 – 38	14	50	60
AIO-CSM72	M72×2.0	57	51 – 57	16	75	80
AIO-CSIN1/2	NPT1/2"	12	6 – 12	13.6	28	24
AIO-CSIN3/4	NPT3/4"	18	13 – 18	14.1	32	33
AIO-CSIN3/2	NPT1"1/2"	32	22 – 32	17.3	50	54
AIO-CSGIN1/2	G1/2"	12	6 – 12	9	26	24
AIO-CSGIN3/4	G3/4"	18	13 – 18	11	27	33
AIO-CSGIN1	G1"	25	18 – 25	11	33	42
AIO-CSGIN5/4	G1"1/4"	28	21 – 28	13	48	54
AIO-CSGIN3/2	G1"1/2"	32	22 – 32	13	48	54
AIO-CSGIN5/2	G2"1/2"	57	51 – 57	14	75	80
AIO-CSPG7	PG7	6.5	3 – 6.5	8	20	15
AIO-CSPG9	PG9	8	4 – 8	8	22	19
AIO-CSPG11	PG11	10	5 – 10	8	24	22
AIO-CSPG13.5	PG13.5	12	6 – 12	9	26	24
AIO-CSPG16	PG16	14	10 – 14	10	28	27
AIO-CSPG21	PG21	18	13 – 18	11	33	33
AIO-CSPG29	PG29	25	18 – 25	11	38	42
AIO-CSPG36	PG36	32	22 – 32	13	48	54
AIO-CSPG42	PG42	38	32 – 38	14	52	60

For additional information on other products available refer to our Cord Grips & Cable Glands, Catalog 12-055.

Metal Cable Glands

AIGO Part	Thread "A"	Max "d" (mm)	Cable Range (mm)	Thread "L" (mm)	Clamp "H" (mm)	Spanner "S" (mm)
AIO-CSJM12	M12x1.5	6.5	3 – 6.5	6.2	15	14
AIO-CSJM14	M14x1.5	8	4 – 8	5	19	15
AIO-CSJM16	M16x1.5	9	6 – 9	6.3	20	18
AIO-CSJM18	M18x1.5	10	5 – 10	7	20	22
AIO-CSJM20	M20x1.5	12	6 – 12	8.3	20	22
AIO-CSJM22	M22×1.5	14	10 – 14	8	24	24
AIO-CSJM24	M24×1.5	14	10 – 14	8	24	27
AIO-CSJM25	M25x1.5	18	13 – 18	7.8	23	30
AIO-CSJM27	M27×2.0	18	13 – 18	8	26	30
AIO-CSJM30	M30×2.0	18	13 – 18	8	26	32
AIO-CSJM32	M32×1.5	25	18 – 25	10	27	40
AIO-CSJM36	M36×2.0	25	18 – 25	10	34	40
AIO-CSJM40	M40×1.5	32	22 – 32	10	39	50
AIO-CSJM50	M50×1.5	38	32 – 38	11	39	60
AIO-CSJM63	M63×1.5	44	37 – 44	12	43	67
AIO-CSJM72	M72×2.0	52	46 – 52	16	47	75
AIO-CSJM80	M80×2.0	60	52 – 60	20	57	90
AIO-CSJM90	M90×2.0	70	62 – 70	20	57	100
AIO-CSJIN1/2	NPT1/2"	12	6 – 12	13.6	25	24
AIO-CSJIN3/4	NPT3/4"	18	13 – 18	14.1	26	30
AIO-CSJIN5/4	NPT1"1/4"	32	22 – 32	17.3	41	50
AIO-CSJIN3/2	NPT1"1/2"	32	22 – 32	17.3	46	50
AIO-CSJIN2	NPT2"	44	37 – 44	17.7	46	65
AIO-CSJIN5/2	NPT2 1/2"	52	46 – 52	23.7	58	80
AIO-CSJIN3	NPT3"	70	62 – 70	26	58	100
AIO-CSJGIN1/2	G1/2"	12	6 – 12	8	24	24
AIO-CSJGIN3/4	G3/4"	18	13 – 18	8	27	30
AIO-CSJGIN1	G1"	25	18 – 25	10	34	40
AIO-CSJGIN5/4	G1"1/4"	32	22 – 32	10	39	50
AIO-CSJGIN3/2	G1"1/2"	32	22 – 32	10	39	50
AIO-CSJGIN2	G2"	44	37 – 44	12	44	65
AIO-CSJGIN5/2	G2 1/2"	52	46 – 52	16	47	82
AIO-CSJPG7	PG7	6.5	3 – 6.5	6	18	14
AIO-CSJPG9	PG9	8	4 – 8	7	21	18
AIO-CSJPG11	PG11	10	5 – 10	7	20	22
AIO-CSJPG13.5	PG13.5	12	6 – 12	8	24	22
AIO-CSJPG16	PG16	14	10 – 14	8	25	24
AIO-CSJPG21	PG21	18	13 – 18	8	26	30
AIO-CSJPG36	PG36	32	22 – 32	10	38	50
AIO-CSJPG42	PG42	38	32 – 38	11	42	60
AIO-CSJPG48	PG48	44	37 – 44	12	44	65

Amphenol® GT Connectors
with RADSOK technology

Amphenol offers Amphe-Power Connectors, high amperage capability connectors designed for the most demanding industrial and transportation applications. The GT connectors, in most shell styles, can be enhanced with RADSOK contacts that handle up to 150% higher amperages than standard contacts.

The RADSOK contact is a hyperbolic, stamped grid configuration within the socket. As male pin is inserted, axial members in the female half deflect, imparting high current flow across the connection with minimal voltage loss. This design ensures a large, coaxial, face-to-face surface area engagement and provides higher current capacity with minimized temperature rise. The RADSOK's strongest benefit is its very low mill-volt drop because of the intimate contact provided by the spring force of the grid. RADSOK contacts are available in size 8 (69 amps), size 4 (120 amps), and size 0 (250 amps). Current Amphe-Power lines support from 50A to 500A continuous duty. Hybrid arrangements with RADSOK and power contacts can be tailored to meet customer needs.

For more information on GT Amphe-Power Connectors, request Brochure SL-391.

The RADSOK Contact Advantage:

- Low contact Resistance
- Low milli-volt drop performance
- Higher current capacity with minimized temperature rise.
- Reliability under vibration and shock.
- High quality, consistency and lower cost

Amphe-Power™ Amphe-GTR

The Amphe-Power™ GT series provides the benefit of a GT connector in a high performance composite material. The GT-R is listed to UL/CUL 2238 Standard, Control Number 19VP. It also meets all of the specifications for high power process control and server applications. Performance level is the same as that of the GT series. RADSOK contacts enable an increased current rating of 120A on individual contacts, and a standard PG thread achieves an IP67 seal rating.

Compression (setscrew) wire termination to the 4/6AWG or 8/10AWG conductors allows for easy field replacement of pin or socket contacts. It also provides for easy complete plug or receptacle assemblies, all without a need for specialized tooling.

Power GT

The Power GT is a modification to the GT series incorporating three 8.0mm RADSOK contacts mounted in a common termination to busbar or cable, enhanced to an ultra-high current density in a compact shell size 28 layout. This design created the first TUV "finger-proof" 500A connector in the marketplace with the "dead-front" pin design to prevent contact with live circuits. In environmental versions, this connector achieves IP67 performance.

The ninety-degree wire orientation on the plug provides low-profile mounting for tight packaging requirements. This plug is designed to be over-molded, and can also be fitted with mechanical hardware for individual requirements.

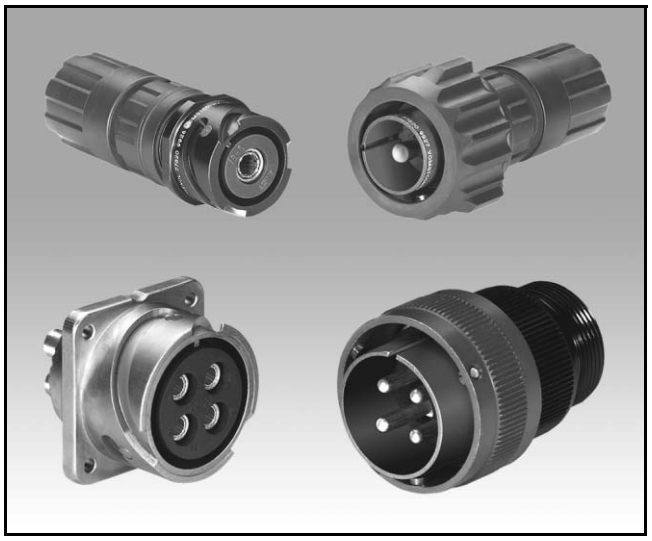

Amphenol ®GT Amphe-Power Connectors with RADSOK® high amperage contacts

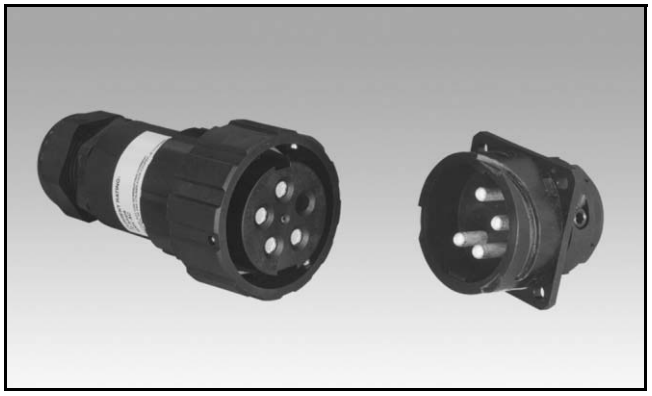

Amphe-Power Composite GTR Connector

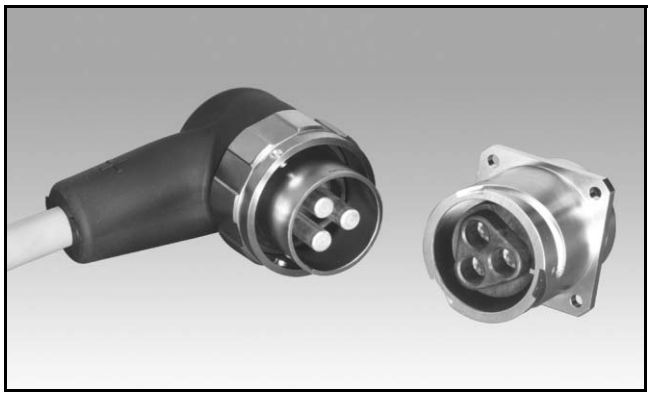

Power GT, Finger-Proof 500A Connector

Amphenol® GT Connectors
special applications

GTC-M Series - The GT with Metal Clip Inserts

Amphenol's GTC-M series combines the GT reverse bayonet connector and the rear release metal clip retention system which is used in the Amphenol®/Matrix® MIL-C-5015 connector line. Another benefit is the captivated coupling nut assembly which allows unmating without the rear accessories attached.

Improved environmental sealing is achieved with this series. The crimp joint is covered by a three-webbed fluorinated silicone grommet that seals on the wires without the necessity of an additional sealing clamp. An interfacial seal with conical towers on the pin insert matches with recesses on the socket; a match that provides the popular "cork and bottle" seal during mating. The grommet and the interfacial seal provides adequate sealing during environmental extremes. The GTC-M series is intermateable and intermountable with the standard GT series, and it uses standard M85049 style rear accessories. For more information on the GTC-M Series, request Product Data Sheet #181.

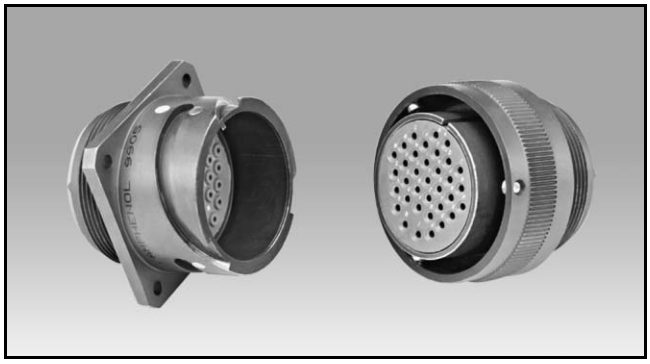

Amphenol ® GTC-M with Metal Clip Inserts

GT-PC Connectors for High Voltage Power Applications

The Amphenol® GT-PC connectors were developed for use in the High Voltage Power Distribution industry. Incorporating all the standard features of the popular GT series, these connectors will prevent accidental electrical shocks to the technicians. "Dead Front" pin contacts in size 0 are recessed into a socket insert, preventing inadvertent contact with a live circuit. Higher amperage levels are provided - up to 100 amps per contact. The GT-PC series has been UL approved. "First Mate - Last Break" features on one or more of the pins provide an additional measure of operator safety. Currently there are 5 insert patterns available. Consult Amphenol Industrial Operations for more information.

Amphenol ® GT-PC Connectors for High Voltage Power Applications

GT Connectors for the HMI Lighting Industry

Amphenol provides GT connectors for the rugged use experienced during stage shows and other entertainment events, even outside in the elements. The same 3-point bayonet coupling system and the same ruggedness to survive 2000 mating cycles are provided. The unique features of this connector series include color-coded receptacle shells with matching backshells on the cable plugs. The colors can be matched to specific wattage cables and/or light systems. A wide selection of environmental adapters designed to seal on the outside diameter of specific cable diameters can be fitted to the backshells. Applications for these connectors include power and control of lighting trusses, and portable power and dimmer racks. For more information request Product Data Sheet #174.

Amphenol ® GT Connectors for the HMI Lighting Industry

Additional Amphenol Industrial Connectors for the Rail Industry

ARCL Series

Amphenol has developed a heavy duty 5015 type connector with 38999 Series III type coupling for use in mass transportation and heavy equipment applications. The ARCL Series has the same electrical characteristics as 5015 standard product but it has rugged ratchet double start stub threads. These rugged double stub threads eliminate mis-mating and provide for easy cleaning.

Other features/benefits of the ARCL connector series:

- 5 key/keyway alignment feature.
- Operating temperature is from –55°C to +125°C. Operating voltage is to 3000 VAC (RMS) at sea level.
- Crimp and solder termination available.
- 5 shell styles with all the 5015 insert patterns available.
- Supplied with low smoke, low halogen inserts which are flame retardant, but also can be supplied with standard 5015 inserts.
- Wide variety of backend accessories for all styles of cable and conduit, and a variety of cable strain reliefs including over-molding and heat shrink boots.
- RADSOK high amperage sockets can be incorporated.

Star-Line® Series

Amphenol/Pyle Star-Line Series is another heavy duty environmental cylindrical connector widely used in mass transportation and in the oil exploration market. Ideal for high amperage and high density control and instrumentation applications, this series has features and benefits as follows;

- Hard anodic coating for dielectric strength with heat and corrosion resistance.
- Operating temperature is from –67°F to +257°F. Amperages up to 1135 amps at 1000VAC or DC rating available.
- Double lead Acme threads provide complete coupling in one turn of the coupling nut, and do not clog under adverse weather conditions.
- Solder, crimp and pressure terminals; circuit breaking power and control types available.
- UL listed and CSA listed for circuit breaking capability.
- 5 shell styles with over 150 insert patterns.
- 3 retention styles with captive contacts or insertable/removable contacts.
- Variety of backend accessories including basketweave cable grips, straight or angled adapters and receptacles mounted to junction boxes.

Over-Molded Cable

Cables can be designed with custom overmold to Amphenol Industrial cylindrical connectors for almost any application in mass transportation or any other types of industrial markets. Overmold seals to the rear of the connector and to the cable jacket to provide moisture sealing. Cables may be designed to meet any environmental performance requirement and any electrical performance requirement. Variety of materials are available: neoprene, hypalon and others.

Consult Amphenol Industrial Operations for further information on these industrial products.

Amphenol ® ARCL Series

Amphenol® Star-Line® Series

Over-Molded Cable for Industrial Connectors

Additional Amphenol Industrial Products
for the Rail Industry, cont.

Trans-Power® Connectors

Amphenol/Pyle provides head-end power connectors for commercial rail systems. These meet Amtrak specification D-77-24, APTA #RP-E-016. Features and benefits include:

- Slip-fit, double seated for environmental protection.
- Retention by receptacle cover or optional accessories.
- Crimp termination per Amtrak and APTA specifications.
- Socket contacts provide uniform pressure for low mating and unmating forces, low voltage drop, consistently low temperature rise and shock resistance.
- Operating ambient temperature is –57°F to +110°F. Electrical performance up to 600 volts, 400 Amps.
- All molded elastomeric rubber body on jumper. Raintight per U/L standard.

Amphenol ® Trans-Power® Connectors for Rail Mass Transit

27 Pole Train-line Receptacles and Jumpers

Amphenol/Pyle 27 pole MU (multiple unit) and communication receptacles and jumpers are provided for rail applications. Jumpers are either standard car to car, between locomotives or between locomotives and lead cars. These products are designed to Amtrak and APTA specifications. Other design features and benefits:

- Locomotive jumpers are keyed differently from all other 27 pole jumpers to prevent mis-mating. They also have identification markings to distinquish their proper usage on locomotives.
- Receptacles are a rugged aluminum housing with a spring loaded cover. Receptacles can be provided with or without leads.
- Push-pull mating.

Amphenol® 27 Pole Train-line Receptacle and Jumpers for Rail Mass Transit

Amphe-Y Composite Molded Connectors

The Amphe-Y is a new Amphenol product for mass transit application that uses RADSOK high amperage sockets. It is a molded interconnect system that provides rapid and safe connect and disconnect for traction motor installation and repair.

This packaging solution consists of a molded base plate, a silver-plated copper “connector” with RADSOK contacts, and a molded top cover. When attached to the traction motor, this unit creates a safe, reliable and efficient means of conducting high amperage current from the third rail or catenary to the propulsion controller. Each “leg” of this assembly can safely accommodate up to 1000 amps through the 18mm RADSOK contacts.

Amphenol has wide capabilities in designing specialty molded interconnect solutions, such as the new Amphe-Y, for power and/or harsh environment applications. Custom designs can include bayonet, theaded or push-pull coupling with crimp solder or pressure termination. They can utilize RADSOK or standard contacts and can be designed to meet specific environmental sealing requirements and temperature ratings.

Amphe-Y Molded Interconnect System for Rail Mass Transit

Consult Amphenol Industrial Operations for further information on these industrial products.

AMPHENOL CORPORATION
Amphenol Industrial
Phone: 888-364-9011
191 Delaware Avenue
Sidney, NY 13838-1395
www.amphenol-industrial.com

Notice: Specifications are subject to change without notice. Contact your nearest Amphenol Corporation Sales Office for the latest specifications. All statements, information and data given herein are believed to be accurate and reliable but are presented without guarantee, warranty, or responsibility of any kind expressed or implied. Statements or suggestions concerning possible use of our products are made without representation or warranty that any such use is free of patent infringement and are not recommendations to infringe any patent. The user should not assume that all safety measures are indicated or that other measures may not be required. Specifications are typical and may not apply to all connectors.

IC-4-2
HKA 6-2016