1-2364720-1 ✔ ACTIVE

TE Internal #: 1-2364720-1

Vertical, Cable-to-Board, 3 Position, 1 Row, 23mm [.905in] Centerline, Silver (Ag), Sealable, Printed Circuit Board, Power, Orange, Board Mount

View on TE.com >

Automotive Parts > Automotive Connectors > Automotive Headers

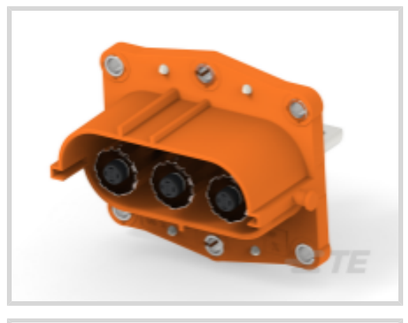
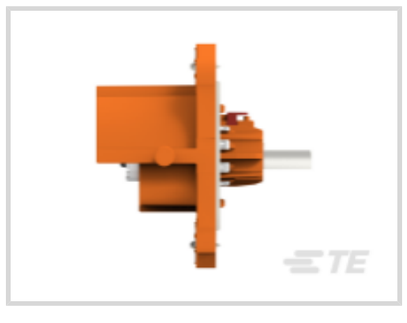
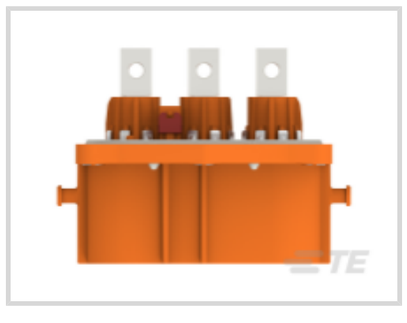
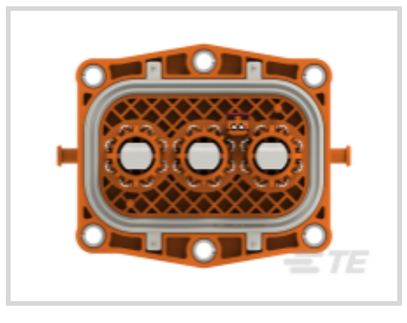


PCB Mount Orientation: **Vertical**

Termination Method to PCB: **Through Hole - Solder**

Sealable: **Yes**

Centerline (Pitch): **23 mm [.905 in]**

Connector System: **Cable-to-Board**

Features

Product Type Features

Mixed & Hybrid Header	No
Header Type	Fully Shrouded
Connector Product Type	Connector Assembly
Sealable	Yes
Connector System	Cable-to-Board
Connector & Contact Terminates To	Printed Circuit Board

Configuration Features

PCB Mount Orientation	Vertical
Number of Positions	3
Number of Rows	1

Body Features

Primary Product Color	Orange

Contact Features

Contact Type	Pin

Contact Mating Area Plating Material	Silver (Ag)

Termination Features

Termination Method to PCB	Through Hole - Solder

Mechanical Attachment

Mating Alignment	With
PCB Mount Alignment	With
PCB Mount Retention	Without
Connector Mounting Type	Board Mount

Housing Features

Centerline (Pitch)	23 mm[.905 in]

Usage Conditions

Operating Temperature (Max)	125 °C[257 °F]
Operating Temperature Range	-40 – 125 °C[-40 – 257 °F]

Operation/Application

Circuit Application	Power

Packaging Features

Packaging Method	Carton

Product Compliance

For compliance documentation, visit the product page on TE.com>

EU RoHS Directive 2011/65/EU	Compliant
EU ELV Directive 2000/53/EC	Compliant
China RoHS 2 Directive MIIT Order No 32, 2016	有害物质含量符合标准要求 No Restricted Substance(s) Above Threshold
EU REACH Regulation (EC) No. 1907/2006	Current ECHA Candidate List: JUNE 2025 (250) Not Yet Reviewed
Halogen Content	BFR/CFR/PVC Free, but Br/Cl >900 ppm in other sources.
Solder Process Capability	Not reviewed for solder process capability

Product Compliance Disclaimer

This information is provided based on reasonable inquiry of our suppliers and represents our current actual knowledge based on the information they provided. This information is subject to change. The part numbers that TE has identified as EU RoHS compliant have a maximum concentration of 0.1% by weight in homogenous materials for lead, hexavalent chromium, mercury, PBB, PBDE, DBP, BBP, DEHP, DIBP, and 0.01% for cadmium, or qualify for an exemption to these

limits as defined in the Annexes of Directive 2011/65/EU (RoHS2). Finished electrical and electronic equipment products will be CE marked as required by Directive 2011/65/EU. Components may not be CE marked.Additionally, the part numbers that TE has identified as EU ELV compliant have a maximum concentration of 0.1% by weight in homogenous materials for lead, hexavalent chromium, and mercury, and 0.01% for cadmium, or qualify for an exemption to these limits as defined in the Annexes of Directive 2000/53/EC (ELV). Regarding the REACH Regulations, TE's information on SVHC in articles for this part number is still based on the European Chemical Agency (ECHA) 'Guidance on requirements for substances in articles'(Version: 2, April 2011), applying the 0.1% weight on weight concentration threshold at the finished product level. TE is aware of the European Court of Justice ruling of September 10th, 2015 also known as O5A (Once An Article Always An Article) stating that, in case of 'complex object', the threshold for a SVHC must be applied to both the product as a whole and simultaneously to each of the articles forming part of its composition. TE has evaluated this ruling based on the new ECHA "Guidance on requirements for substances in articles" (June 2017, version 4.0) and will be updating its statements accordingly.

Compatible Parts

TE Part # 2356072-1
FAMILY SEAL,HVP800,NAT,RADIAL SEAL

Customers Also Bought



TE Part #114017-ZZ
SEALING PLUG, SIZE 12/16, WHT



TE Part #DT04-2P
REC, 2P, GRY, N



TE Part #DT06-2S
PLG, 2P, GRY, N



TE Part #CAT-D48-ST273
DEUTSCH Connector Solid Contacts



TE Part #CAT-D487-W416
Wedgelocks: DEUTSCH DT

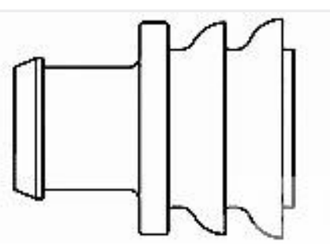

TE Part #281934-2
SINGLE WIRE SEAL



TE Part #CAT-AM71-CH8172
AMP SUPERSEAL 1.5MM, CONNECTOR HOUSING

Documents

Product Drawings

3POS,PIN DIA 8.0,HDR ASSY,180DEG

English

CAD Files

3D PDF

3D

Customer View Model

ENG_CVM_CVM_1-2364720-1_A.2d_dxf.zip

English

Customer View Model

ENG_CVM_CVM_1-2364720-1_A.3d_igs.zip

English

Customer View Model

ENG_CVM_CVM_1-2364720-1_A.3d_stp.zip

English

By downloading the CAD file I accept and agree to the **Terms and Conditions** of use.

Product Specifications

Application Specification

English