1-2322122-1 ✔ ACTIVE

TE Internal #: 1-2322122-1

TE Internal Description: HVP800 2P HEADER ASSY

View on TE.com >

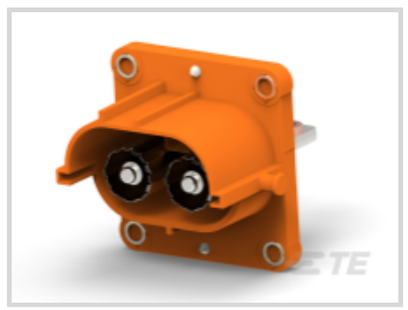
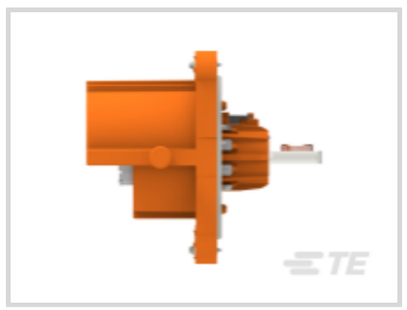
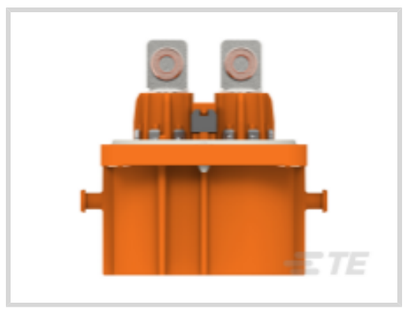
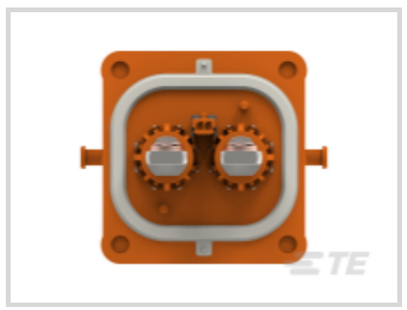
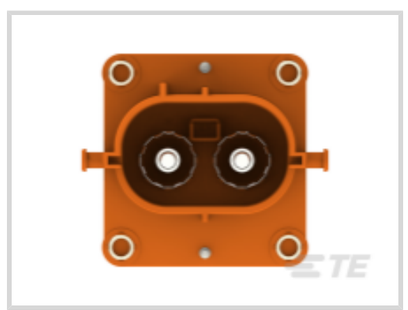

Product Compliance

For compliance documentation, visit the product page on TE.com>

EU RoHS Directive 2011/65/EU	Compliant
EU ELV Directive 2000/53/EC	Compliant
China RoHS 2 Directive MIIT Order No 32, 2016	有害物质含量符合标准要求 No Restricted Substance(s) Above Threshold
EU REACH Regulation (EC) No. 1907/2006	Current ECHA Candidate List: JUNE 2025 (250) Candidate List Declared Against: JUNE 2025 (250) Does not contain REACH SVHC
Halogen Content	Low Halogen - Br, Cl, F < 900 ppm per homogenous material. Also BFR/CFR/PVC Free
Solder Process Capability	Not applicable for solder process capability

Product Compliance Disclaimer

This information is provided based on reasonable inquiry of our suppliers and represents our current actual knowledge based on the information they provided. This information is subject to change. The part numbers that TE has identified as EU RoHS compliant have a maximum concentration of 0.1% by weight in homogenous materials for lead, hexavalent chromium, mercury, PBB, PBDE, DBP, BBP, DEHP, DIBP, and 0.01% for cadmium, or qualify for an exemption to these limits as defined in the Annexes of Directive 2011/65/EU (RoHS2). Finished electrical and electronic equipment products will be CE marked as required by Directive 2011/65/EU. Components may not be CE marked. Additionally, the part numbers that TE has identified as EU ELV compliant have a maximum concentration of 0.1% by weight in homogenous materials for lead, hexavalent chromium, and mercury, and 0.01% for cadmium, or qualify for an exemption to these limits as defined in the Annexes of Directive 2000/53/EC (ELV). Regarding the REACH Regulation, the information TE provides on SVHC in articles for this part number is based on the latest European Chemicals Agency (ECHA) 'Guidance on requirements for substances in articles' posted at this URL: https://echa.europa.eu/guidance-documents/guidance-on-reach

Compatible Parts



TE Part # 1-2177053-2
2POS,8MM HV,PLUG HSG,ASSY, SEALED



TE Part # 2-2310922-1
2POS,8MM HV,REC HSG,90D,ASSY, SEALED



TE Part # 1-2177053-1
2POS,8MM HV,PLUG HSG,ASSY, SEALED

Customers Also Bought



TE Part #2141155-1
PROTEC. COVER 8MM HV,90DEG



TE Part #2141156-1
SWS,8MM HV,WHT,50 SQMM



TE Part #3-2176326-0
CRGP 0603 2K7 1%



TE Part #3-2176326-1
CRGP 0603 3K3 1%



TE Part #3-2176326-4
CRGP 0603 5K6 1%



TE Part #2177058-1
INSULATION INSERT,180DEG



TE Part #2177059-1
PROTECTION CAP,180DEG



TE Part #2177061-2
SHIELD CRIMP FERRULE,180DEG



TE Part #2208608-3
8MM HV, CONTACT,ASSY



TE Part #1-2177053-2
2POS,8MM HV,PLUG HSG,ASSY, SEALED

Documents

Product Drawings

HVP800 2P HEADER ASSY

English

HVP800 2P HEADER ASSY

English

CAD Files

3D PDF

3D

Customer View Model

ENG_CVM_CVM_1-2322122-1_C.2d_dxf.zip

English

Customer View Model

ENG_CVM_CVM_1-2322122-1_C.3d_igs.zip

English

Customer View Model

ENG_CVM_CVM_1-2322122-1_C.3d_stp.zip

English

By downloading the CAD file I accept and agree to the **Terms and Conditions** of use.

Product Specifications

Application Specification

English

Application Specification

English