1-2273076-1 SUPERSEDED

TE Internal #: 1-2273076-1

TE Internal Description: M12 x 1.0 angled plug pigt A

View on TE.com >

Cable Assemblies > Copper Cable Assemblies > M8/M12 Cable Assemblies

Cable Assembly Length: **1.5 m [4.9 ft]**

M8/M12 Application Type: **Sensor/Actuator**

Number of Positions: **3**

Connector & Keying Code: **A**

Cable Assembly Type: **M12 Pigtail**

Features

Product Type Features

Cable Assembly Type	M12 Pigtail
Cable Assembly (End A)	M12 Plug

Configuration Features

Number of Positions	3

Electrical Characteristics

Operating Voltage	250 VDC

Body Features

Jacket Material	PVC
Connector Color (End A)	Black
Cable Color	Black
Wire Color (Base)	Brown, Blue, Black
Connector & Keying Code	A

Contact Features

Contact Current Rating (Max)	4 A

Mechanical Attachment

Thread Size	M12
Connector Orientation (End A)	Right Angle

Housing Features

Housing Material	Plastic

Dimensions

Outside Cable Diameter	4.6 mm[.181 in]
Wire Size	22 AWG

Operation/Application

M8/M12 Application Type	Sensor/Actuator
Shielded	No

Packaging Features

Packaging Method	Box
Packaging Quantity	25

Other

Field Serviceable	Yes
Cable Assembly Length	1.5 m[4.9 ft]
Cable Assembly Configuration	Single Ended

Product Compliance

For compliance documentation, visit the product page on TE.com>

EU RoHS Directive 2011/65/EU	Compliant
EU ELV Directive 2000/53/EC	Not Yet Reviewed
China RoHS 2 Directive MIIT Order No 32, 2016	No Restricted Materials Above Threshold
EU REACH Regulation (EC) No. 1907/2006	Current ECHA Candidate List: JUNE 2025 (250) Candidate List Declared Against: JAN 2022 (223) Does not contain REACH SVHC
Halogen Content	Low Halogen - Br, Cl, F < 900 ppm per homogenous material. Also BFR/CFR/PVC Free
Solder Process Capability	Not applicable for solder process capability

Product Compliance Disclaimer

This information is provided based on reasonable inquiry of our suppliers and represents our current actual knowledge based on the information they provided. This information is subject to change. The part numbers that TE has identified as EU RoHS compliant have a maximum concentration of 0.1% by weight in homogenous materials for lead, hexavalent chromium, mercury, PBB, PBDE, DBP, BBP, DEHP, DIBP, and 0.01% for cadmium, or qualify for an exemption to these limits as defined in the Annexes of Directive 2011/65/EU (RoHS2). Finished electrical and electronic equipment products will be CE marked as required by Directive 2011/65/EU. Components may not be CE marked. Additionally, the part numbers that TE has identified as EU ELV compliant have a maximum concentration of 0.1% by weight in homogenous materials for lead, hexavalent chromium, and mercury, and 0.01% for cadmium, or qualify for an exemption to these limits

as defined in the Annexes of Directive 2000/53/EC (ELV). Regarding the REACH Regulation, the information TE provides on SVHC in articles for this part number is based on the latest European Chemicals Agency (ECHA) 'Guidance on requirements for substances in articles' posted at this URL: https://echa.europa.eu/guidance-documents/guidance-on-reach

Customers Also Bought

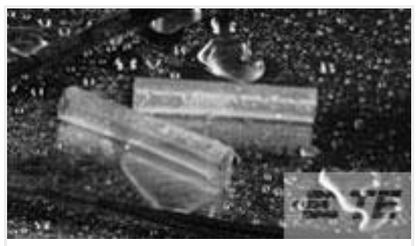

TE Part #035377P004
ES1000-NO.3-B8-X-STK

TE Part #CAT-C73765-M1F
M12 Panel Mount Wire

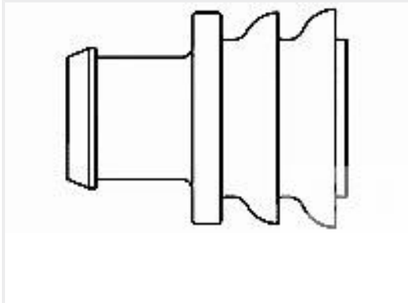

TE Part #281934-3
SINGLE WIRE SEAL

TE Part #338728-6
MICROM. MOB SMD CON

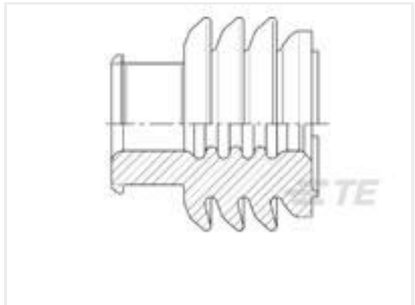

TE Part #1355437-2
MCP9,5 EINZELDICHTG

TE Part #1-2273022-2
M12 x 1.0 straight plug pigt A

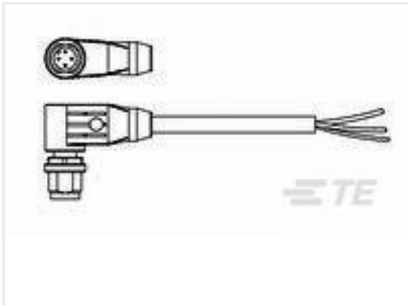

TE Part #1-2273082-1
M12 x 1.0 angled plug pigt A

TE Part #1483351-1
MICRO-MATCH LEAD 06P 100MM

Documents

CAD Files

3D PDF

3D

Customer View Model
ENG_CVM_CVM_1-2273076-1_A.2d_dxf.zip

English

Customer View Model
ENG_CVM_CVM_1-2273076-1_A.3d_igs.zip

English

Customer View Model
ENG_CVM_CVM_1-2273076-1_A.3d_stp.zip

English

By downloading the CAD file I accept and agree to the Terms and Conditions of use.

Datasheets & Catalog Pages

M8 / M12 Connector System Catalog

Japanese

M8 / M12 Connector System Catalog

English

Product Specifications

Product Specification

English