THIS DRAWING IS UNPUBLISHED. RELEASED FOR PUBLICATION – ,4:1 .
© COPYRIGHT – By – ALL RIGHTS RESERVED.

LOC	DIST
DW	—

REVISIONS

P	LTR	DESCRIPTION	DATE	DWN	APVD
	B2	REVISED(ECR-18-000596)	10JAN18	T.Z	H.W

1. EU ROHS–RELATED RESTRICTED SUBSTANCE SPEC IN HOMOGENEOUS MATERIAL REFER TO TEC–138–702 REV.G:
   LEAD < 1000PPM, CADMIUM < 100PPM, MERCURY < 1000PPM
   CHROMIUM VI < 1000PPM, PBB <1000PPM, PBDE < 1000PPM
2. HALOGEN FREE SPEC:
   CHLORINE (CI): 900 ppm MAX.
   BROMINE (Br): 900 ppm MAX.
   CHLORINE (CI) + BROMINE (Br): 1500 ppm MAX.

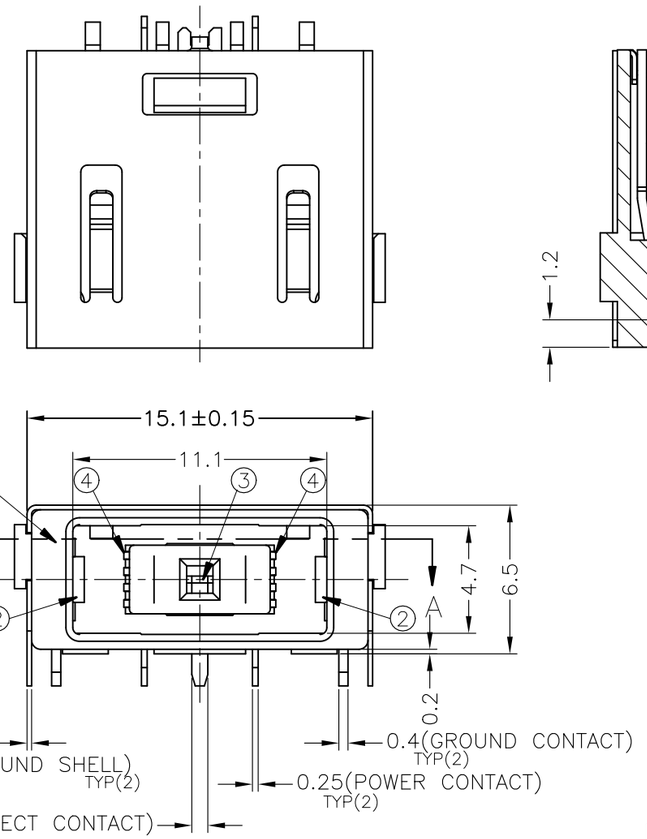

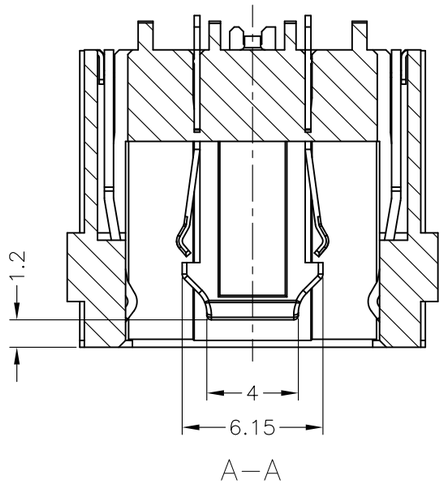

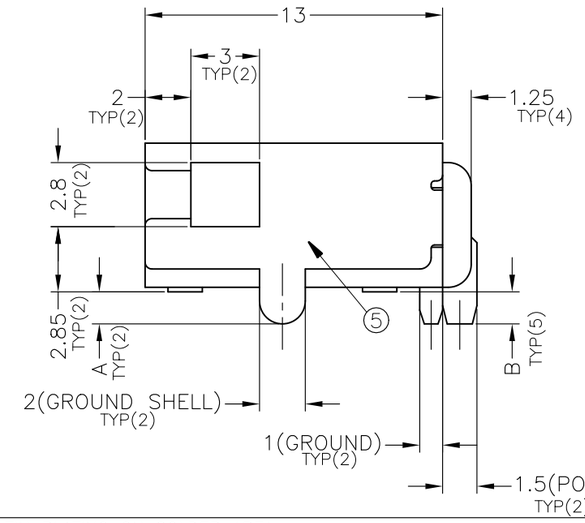

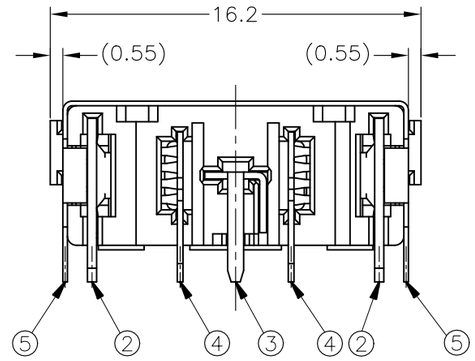

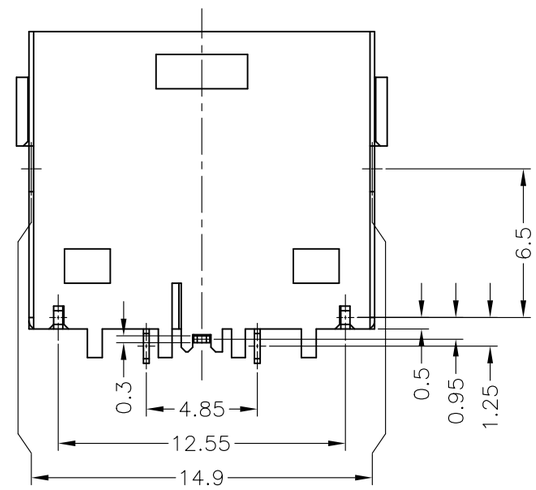

B2

	A'SSY P/N				
	1–2129458–3	1–2129458–2	1–2129458–1	2129458–2	2129458–1
DIM B	2.1	1.2	1.4	1.2	1.4
DIM A	2.1	1.2	1.4	1.2	1.4

Q'TY					FINISH/COLOR	MATERIAL	PART NAME	NO.
1	1	1	1	1	0.002mm MATTE TIN PLATING ON SOLDER AREA, 0.00127mm MIN. NICKEL UNDERPLATED ALL OVER	COPPER ALLOY	GROUND SHELL	⑤
2	2	2	2	2	0.0002mm GOLD PLATING ON CONTACT AREA, 0.002mm MATTE TIN PLATING ON SOLDER AREA, 0.002mm MIN. NICKEL UNDERPLATED ALL OVER	COPPER ALLOY	POWER CONTACT	④
1	1	1	1	1	0.0002mm GOLD PLATING ON CONTACT AREA, 0.002mm MATTE TIN PLATING ON SOLDER AREA, 0.002mm MIN. NICKEL UNDERPLATED ALL OVER	COPPER ALLOY	DETECT CONTACT	③
2	2	2	2	2	0.0002mm GOLD PLATING ON CONTACT AREA, 0.002mm MATTE TIN PLATING ON SOLDER AREA, 0.002mm MIN. NICKEL UNDERPLATED ALL OVER	COPPER ALLOY	GROUND CONTACT	②
1	1	1	1	1	BLACK	HIGH TEMPERATURE THERMO–PLASTIC (UL94V–0)	HOUSING	①

THIS DRAWING IS A CONTROLLED DOCUMENT.

DIMENSIONS: mm

TOLERANCES UNLESS OTHERWISE SPECIFIED:
0 PLC ± –
1 PLC ± –
2 PLC ± – ±0.25
3 PLC ± – ±3°
4 PLC ± –
ANGLES ± –

MATERIAL: SEE TABLE

FINISH: –

DWN	S.HUANG	20JUN2012
CHK	V.PENG	20JUN2012
APVD	W.KODAMA	20JUN2012
PRODUCT SPEC	108–99040	
APPLICATION SPEC	501–99041	
WEIGHT	1.94g	

TE Connectivity

NAME: DC POWER JACK CONNECTOR DIP TYPE (10.7A)

SIZE	CAGE CODE	DRAWING NO	RESTRICTED TO
A3	00779	C–2129458	–

CUSTOMER DRAWING

SCALE	SHEET	REV
4:1	1 OF 3	B2

THIS DRAWING IS UNPUBLISHED. RELEASED FOR PUBLICATION –,– .
© COPYRIGHT – By – ALL RIGHTS RESERVED.

LOC	DIST
DW	—

REVISIONS

P	LTR	DESCRIPTION	DATE	DWN	APVD
	–	SEE SHEET 1	–	—	—

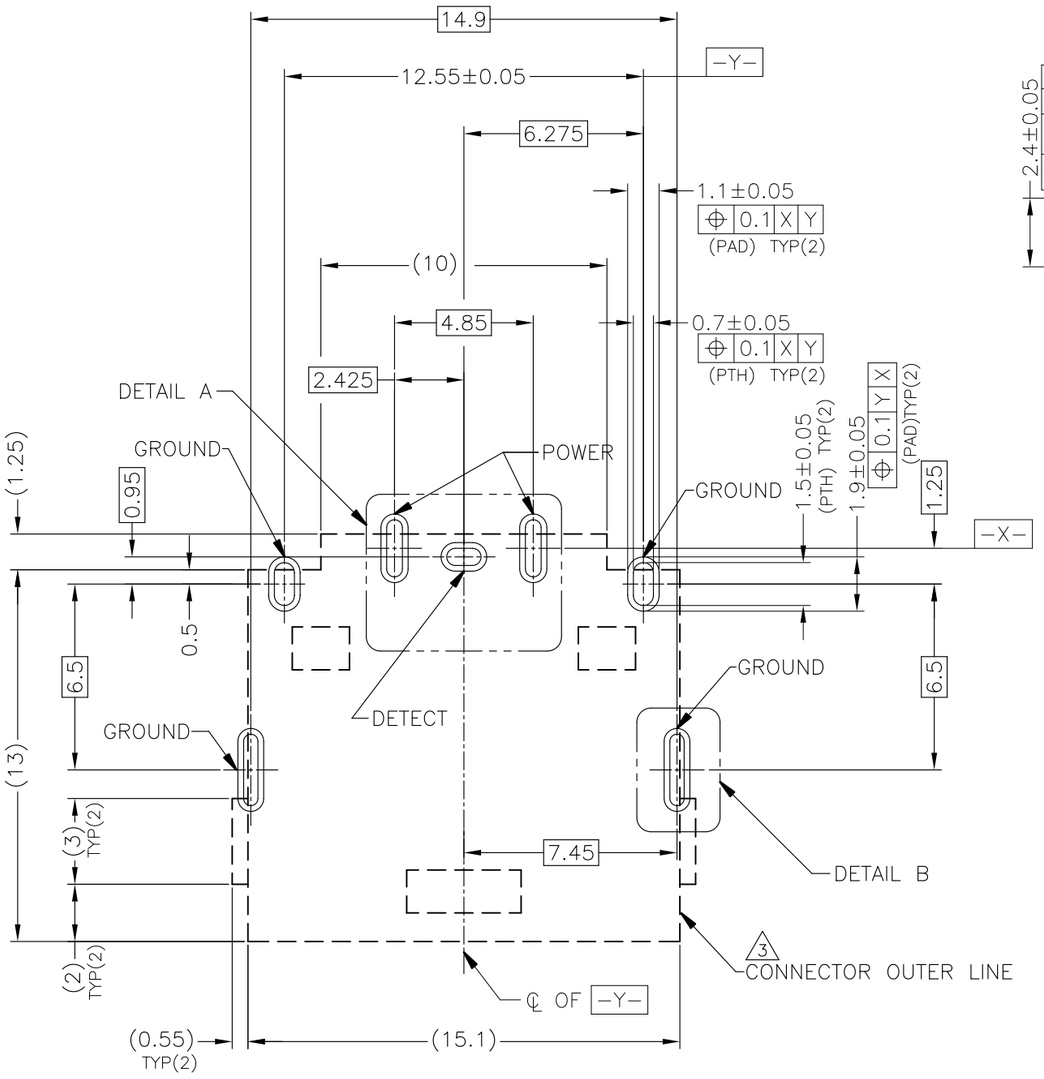

RECOMMENDED P.C.BOARD PATTERN LAYOUT (TOP VIEW)
TOLERANCE:±0.05 (THICKNESS=0.8mm)

3 [ ]: CONNECTOR OUTER LINE (NO COMPONENT AREA)

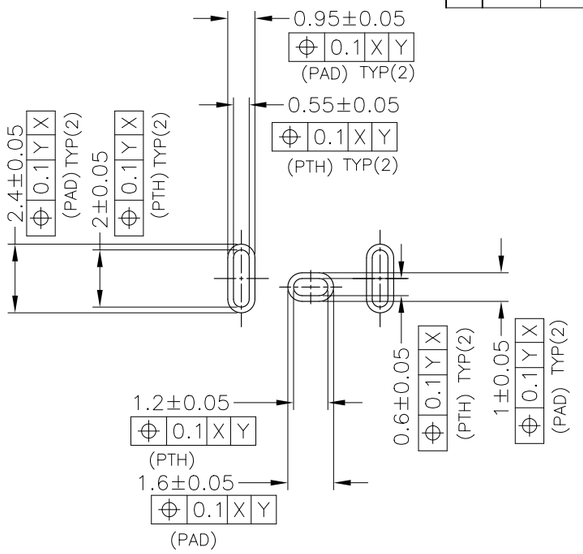

DETAIL A

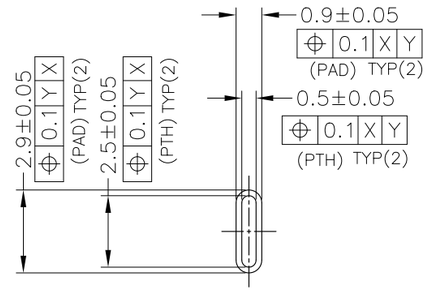

DETAIL B

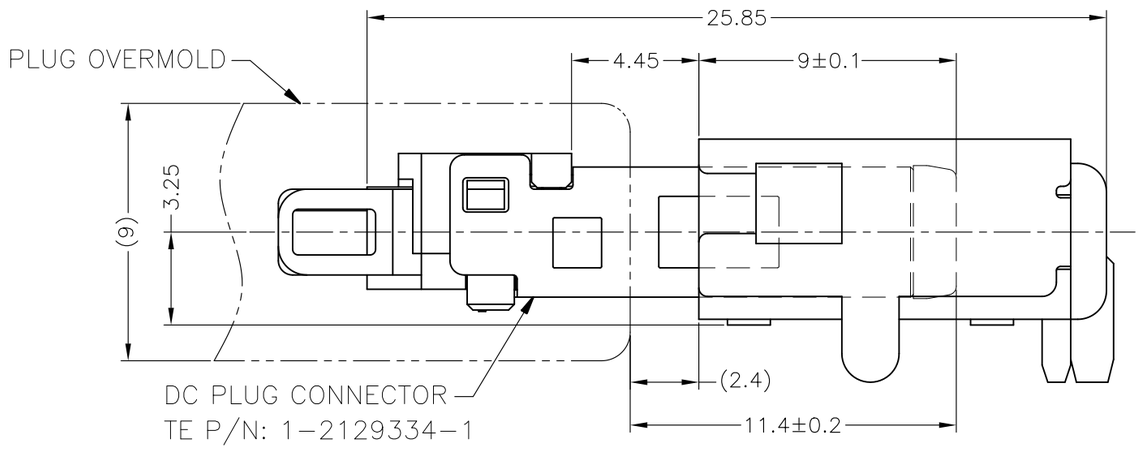

MATING CONDITION

THIS DRAWING IS A CONTROLLED DOCUMENT.		DWN –	TE Connectivity
		CHK –	
DIMENSIONS: mm	TOLERANCES UNLESS OTHERWISE SPECIFIED: 0 PLC ± – 1 PLC ± – 2 PLC ± – ±0.25 3 PLC ± – ±3° 4 PLC ± – ANGLES ± –	APVD –	NAME: DC POWER JACK CONNECTOR DIP TYPE (10.7A)
		PRODUCT SPEC —	
		APPLICATION SPEC —	
MATERIAL –	FINISH –	WEIGHT —	SIZE A3 · CAGE CODE 00779 · DRAWING NO C-2129458 · RESTRICTED TO —
		CUSTOMER DRAWING	SCALE 5:1 · SHEET 2 OF 3 · REV B2

THIS DRAWING IS UNPUBLISHED. RELEASED FOR PUBLICATION –,– .
© COPYRIGHT – By – ALL RIGHTS RESERVED.

LOC	DIST
DW	—

REVISIONS

P	LTR	DESCRIPTION	DATE	DWN	APVD
	–	SEE SHEET 1	–	—	—

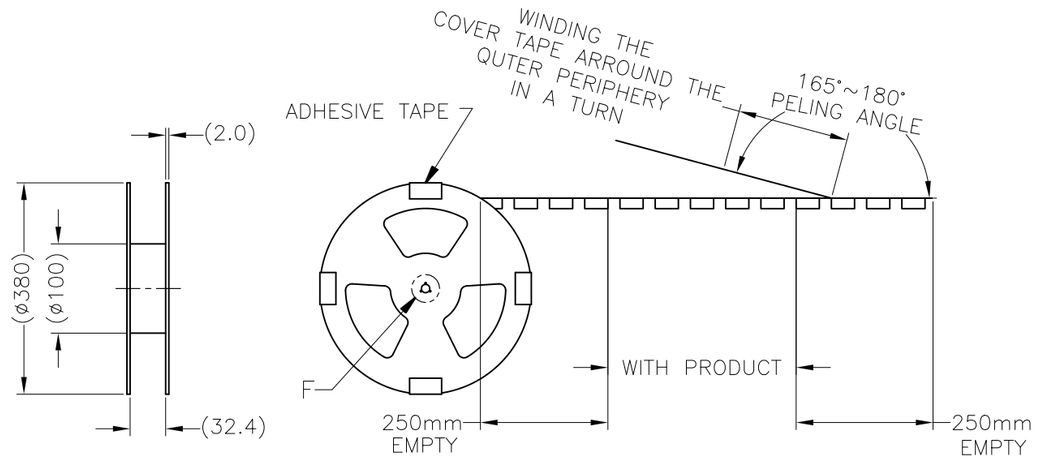

USER DIRECTION OF UNREELING

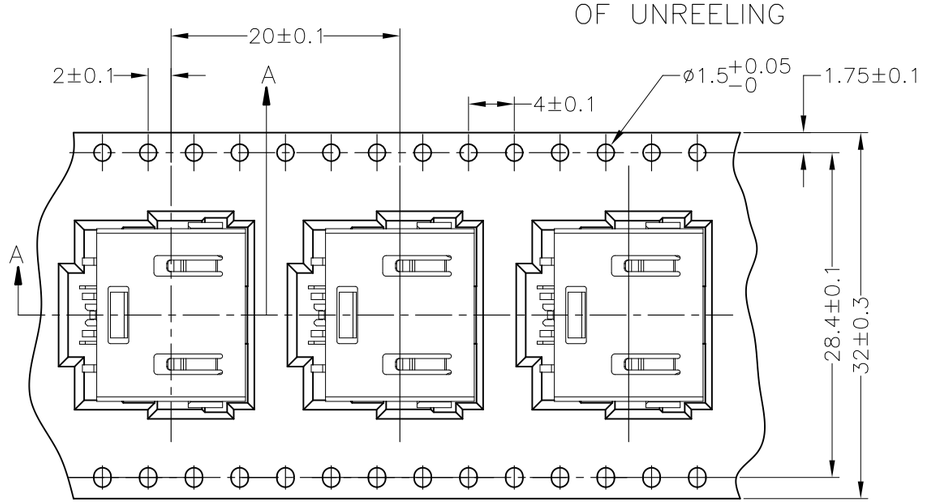

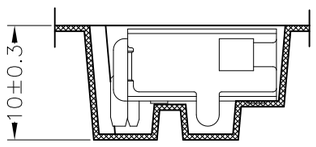

A–A

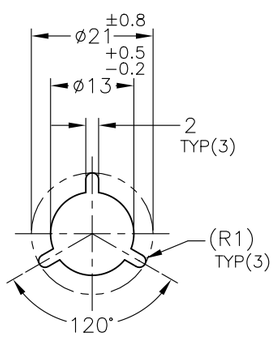

DETAIL F
SCALE: FREE

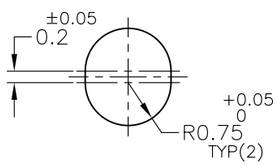

DETAIL G
SCALE 10:1

4. SHIPPING BOX DIMENSION: 445mmX445mmX270mm

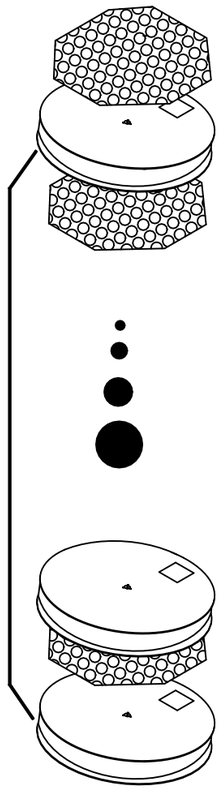

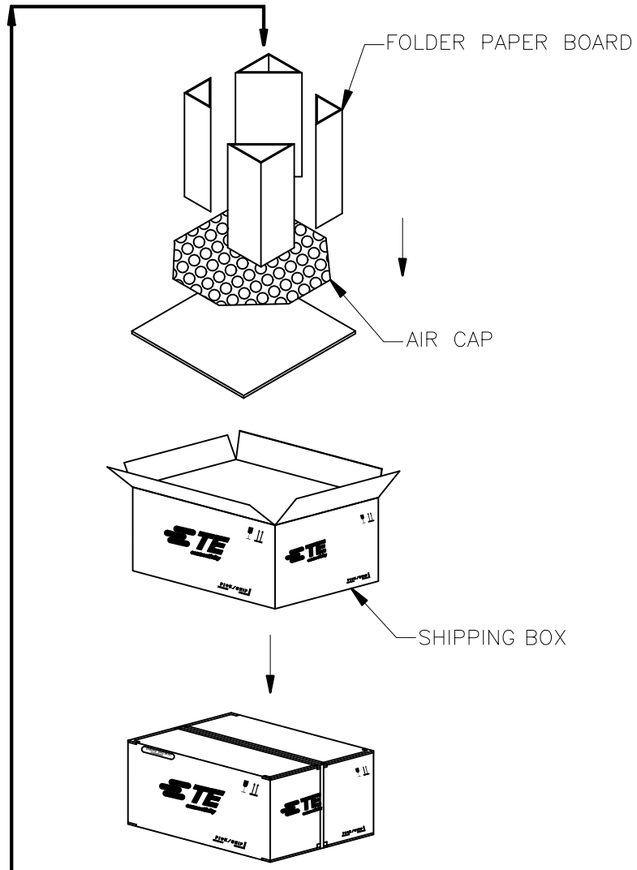

450	5	2250
PCS/REEL	REEL/SHIPPING BOX	TOTAL Q'TY

THIS DRAWING IS A CONTROLLED DOCUMENT.

DIMENSIONS: mm

TOLERANCES UNLESS OTHERWISE SPECIFIED:
0 PLC ± –
1 PLC ± –
2 PLC ± – ±0.25
3 PLC ± – ±3°
4 PLC ± –
ANGLES ± –

MATERIAL –
FINISH –

DWN –
CHK –
APVD –
PRODUCT SPEC —
APPLICATION SPEC —
WEIGHT —

TE Connectivity

NAME
DC POWER JACK CONNECTOR
DIP TYPE (10.7A)

SIZE	CAGE CODE	DRAWING NO	RESTRICTED TO
A3	00779	C-2129458	—

CUSTOMER DRAWING | SCALE NA | SHEET 3 OF 3 | REV B2