cannon

# Microminiature Connectors Catalog



ITT

cannon

# Amazing Things Happen

## When Great Things Connect

### More than a Century of Connections

ITT Cannon is a leading global manufacturer of interconnect solutions serving international customers in the aerospace and defense, industrial, transportation and medical end markets. Whether delivering critical specs to aircraft pilots, streaming data through communications satellites, or enabling ultrasound equipment to give expectant parents a first look at their unborn child, ITT Cannon connects the world's most important information with those who need it. Since 1915, Cannon products have been used in a history of "firsts". From the first "talking" movie to the first man on the moon, Cannon has set the standard for reliable, harsh environment interconnect solutions. Today we proudly continue our legacy of innovation with a goal to connect the world and inspire the successes of the next century - because amazing things happen when great things connect.

### The ITT Cannon Difference

- World-class design, engineering & manufacturing capabilities
- A commitment to quality at every touch point
- Global product reach with local customer service & support
- Unrivaled customization experience
- An innovative & trusted business partner

### About ITT

ITT is a diversified leading manufacturer of highly engineered critical components and customized technology solutions for the energy, transportation and industrial markets. Building on its heritage of innovation, ITT partners with its customers to deliver enduring solutions to the key industries that underpin our modern way of life. ITT is headquartered in Stamford, Connecticut, with employees in more than 35 countries and sales in approximately 125 countries. For more information, visit ITT.com



ITT



Military & Defense



Transportation



Commercial Aerospace



Medical



Industrial

## ITT Cannon's portfolio

of high performance interconnects is one of the most extensive in the industry, offering a wide range of custom and off-the-shelf connectors and cable assemblies for applications in the Commercial Aerospace, Military & Defense, Transporation, Industrial and Medical end markets. For more details, visit ITTCannon.com.

# Microminiature Interconnect Solutions

## Ultra lightweight, space-saving connectors and cable assemblies for unmatched performance & reliability in the harshest environments

ITT Cannon is your one-stop source for the design and manufacture of Microminiature solutions for the high performance connector market.

Offering one of the broadest selections of standard and custom Microminiature products available, our versatile portfolio includes a wide range of shell styles and configurations including rectangular, circular, quick disconnect, filter, hermetic, mixed signal packages and strip-style.

Each one features our Cannon-engineered Micro Twist Pin Contact System for maximum performance, as well as unique mechanical engagement and locking mechanisms to ensure reliability in the harshest environments.

Ideally suited for markets and applications that require extremely small, lightweight and reliable interconnects, our Microminiature Connectors feature higher density contact configurations than traditional rectangular solutions—without sacrificing quality or performance.



### Key Benefits

- Ultra small, lightweight & high performance form factor
- Available in 8 shell sizes that accommodate from 9 to 100 contacts, plus special power and coaxial contact arrangements
- Exceptional bandwidth performance
- Durability to withstand high shock and vibration
- Unique mechanical engagement & locking mechanisms
- Custom & turnkey cable assemblies
- RoHS compliant part numbers & plating options

### Key Features

- Micro Twist Pin Contact System recessed into plug insulators
- Positions: 9, 15, 21, 25, 31, 37, 51, 69, 100
- Wire size: AWG 24 thru AWG 32
- Micro socket: Free standing used in receptacle side
- Current rating: 3A
- Durability: 500 mating cycles
- Contacts: Copper alloy; gold plated
- Low profile configurations available
- Designed to MIL-DTL-83513 specifications
- Operating temperatures:
  MDM Standard: -55°C to +150°C
  High Temp MDM (F222): -55°C to +200°C
  Ultra-High Temp MDM (F300): -55°C to +230°C









## Markets & Applications

From automated space vehicles roving the surface of Mars, to oil & gas exploration in remote locations the world over, ITT Cannon's versatile, high performance Microminiature Connectors transmit data, power and signal when it matters most.

## Twist Pin Technology

At the heart of our Microminiature Connector Series is the Twist Pin Contact System, which Cannon engineers first developed and licensed in the 1960s. Highly reliable Twist Pin Technology allows continuity in very dense areas and under severe shock and vibration, requiring low engagement and separation forces. It is superior technology that outperforms traditional machined or stamped electrical contract systems.

## Cable Assemblies

Our extensive expertise in designing and manufacturing Microminiature Connectors translates into our ability to design and deliver both Turnkey and Custom Cable Assemblies.

### Microminiature Product Line

- MDM Micro-D (MIL-DTL-83513)
- MDM PCB (MIL-DTL-83513)
- MDM Vertical Mount
- MDLM Micro-D Metal Shell, Low Profile, Standard & F222
- MDM F222 High Temp Micro
- MDLM Board-Mount, Low Profile F222
- MDM F300 Ultra-High Temp Micro
- MCM C/P Coaxial Power Micro
- MDMH Hermetic Micro
- TMDM Filter Micro
- MD*Plastic Micro-D
- MDB Coaxial Micro
- MJS Micro Center Jacksrew
- MIK Micro Circular
- MIKM Micro Circular
- MIKQ Micro Circular
- MT* Strip-Style
- ME Micro Edgeboard
- Customs & Specials

For more details, see our Product Selection Guide on page 8-9.

Dimensions shown in ( ) are in mm
Specifications and dimensions subject to change

# Table of Contents


Cannon Brand & Portfolio Overview ..... 2-3
Microminiature Interconnect Solutions Overview ..... 4-5
Table of Contents ..... 6
Cannon Twist Pin Contact System ..... 7
Product Selection Guide ..... 8-9
Micro-D Metal Shell - .050" Contact Spacing (MDM) ..... 10-18
Micro-D Coaxial/Power - .050" Contact Spacing (MDM-C/P) ..... 19-20
Micro-D PCB - .050" Contact Spacing (MDM-PCB) ..... 21-24
Micro-D Vertical Mount CBS (MDM-PCB) ..... 25-30
200°C High-Temp Micro-D Wired Low Profile (MDLM F222) ..... 31-44
200°C High Temp Micro-D Board Mount PCB Low Profile (MDLM F222) ..... 35-38
200°C High Temp Micro-D ..... 39
200°C High Temp Micro-D Wired and Solder Pot (MDM-F222) ..... 40
230°C Ultra-High Temp Micro-D Wired and Solder Pot (MDM-F300) ..... 41
Micro-D Metal Shell - .050" Contact Spacing (MIL-DTL-83513) ..... 42-43
Accessories - Shielded Metal Backshell ..... 44
Hermetic (MDMH) ..... 45-46
Filter (TMDM) ..... 47-49
Micro-D Plastic Shell - .050" Contact Spacing (MD/MDB/MDB-PCB, MDV) ..... 50-61
Micro Center Jackscrew (MJS) ..... 62-66
Microminiature Circular - .050" Contact Spacing (MIK, MIKM, MIKQ) ..... 67-73
Microstrips .050" Contact Spacing (MT) ..... 74-77
Microminiature Strip - .100/.050" Contact Spacing (MT) ..... 78-79
Micro Edgeboard - .050" Contact Spacing (MEB) ..... 80-84
Cable Assemblies ..... 85
Flex Circuit Cable Assembly ..... 86
Custom Back Shells ..... 87
Appendix
- Standard Wire Termination "L" Code Chart ..... 88
- Standard Wire Termination "H" Code Chart ..... 89
- Wire Color Code Chart ..... 90
- Micro-D Accessories Dust Caps ..... 91

About ITT Cannon ..... 92
Product Safety Information ..... 93

# Cannon Twist Pin Contact System

At the heart of our Microminiature Connector Solutions is Cannon's proven Twist Pin Contact System, which features superior electrical and mechanical technology that outperforms traditional machined or stamped electrical contract systems. Highly reliable twist pin technology allows continuity in very dense areas and under severe shock and vibration, requiring low engagement and separation forces. Termination can consist of uninsulated pigtails or insulated wire all pre-harnessed at our factory to customer specifications. Cannon engineers developed and introduced Twist Pin Contact Technology in the 1960s, and have used it in the Cannon MDM Series Microminiature Connectors for decades. ITT Cannon Cannon's Twist Pin System consists of the Micro Socket and the Micro Pin or Twist Pin.



### Advantages of Cannon's Twist Pin Contact System

- Seven points of electrical contact (Micro 0.050 inch interconnect)
- Contact and crimp sleeve materials carefully optimized for extremely reliable crimps; no design tradeoffs
- Seamless crimp sleeves
- Multiple 4-indent wire crimps standard & smaller bore micro socket contacts
- Standard integral tail & thru bundle MicroPin contacts (high density packaging)
- High mating cycles
- High current handling capabilities
- System qualification in numerous aerospace, defense, electronic & high temperature geophysical applications
- Wide array of wire terminations

# How It Works: POS-A-Line Contact Alignment*

The flexible Twist Pin is recessed into the insulator and the rigid socket is exposed, reversing the traditional positions of pin and socket. During mating, the socket is guided into the pin insulator by the lead-in chamfer. The pin is kept from flexing beyond the socket capture radius by the walls of the cavity. The hemispherical weld of controlled radius at the tip of the pin combines with the lead-in chamfers of the socket contact and the pin insulator to carn the pin into alignment. By controlling the welding process and the dimensions of the socket contact and the insulators, it is impossible for the recessed pin to escape the socket capture radius.

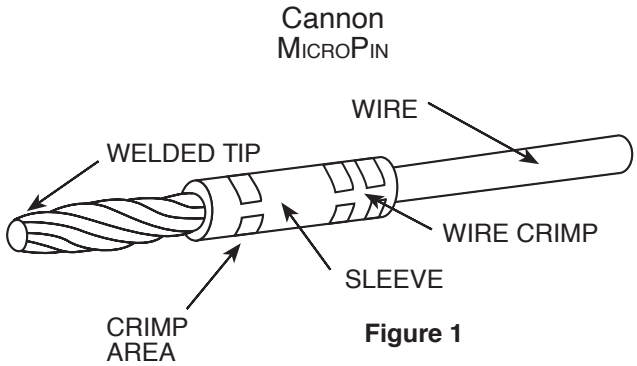


**Figure 1**

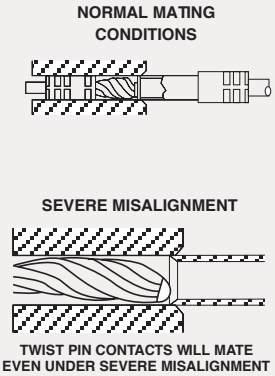


**Figure 2**

**Figure 2** - Illustrates the Twist Pin features, as well as mating & severe misalignment conditions.

***Figure 1** - The Twist Pin Contact System consists of several stranded cores making up the wire bundle. The strands are subsequently heat treated and a weld is performed on the tip of each contact. Crimp sleeves are then inserted over the contact and crimp areas are defined to produce a seamless crimp system. The Twist Pin Contact System is referred by ITT Cannon as a Pos-A-Line contact alignment system. Our reference to this system identifies that the flexible Twist Pin is recessed into the insulator and the rigid socket is exposed thus reversing the traditional positions of the pin and socket. During the mating sequence, the socket is guided into the pin insulator by the lead-in chamfer. The pin is kept from flexing beyond the socket capture radius by the walls of the cavity. The hemispherical weld of controlled radius at the tip of the pin combines with the lead-in chamfer of the socket contact and the pin insulator to cam the pin in alignment. ITT Cannon has developed a very robust Six Sigma manufacturing process that controls the welding process as well as the dimensions of the socket contact and insulator material. The net result is a contact system that makes it impossible for the recessed pin to escape the socket capture radius.

# Cannon Microminiature Connectors | Product Selection Guide

| | MDM | MDM PCB | MDLM Low Profile | MDM Coaxial/Power Combo | High Temp Micro MDM F222 | Ultra-High Temp Micro MDM F300 | MIL-DTL-83513 | MDMH Hermetics |
|---|---|---|---|---|---|---|---|---|
| |  |  |  |  |  |  |  |  |
| **Applications** | MDM Connectors are highly reliable, extremely small and lightweight with higher density contact configurations than traditional rectangular connectors. | MDM-PCB Metal Shell High Density Connectors are designed for use with flex circuitry, flat cable and printed circuit boards. Straight, Right Angle, Right Angle Narrow, and Straight Narrow PCB Profile. | MDLM high temperature (F222 200°C) Connectors are ideally suited for harsh environment applications that require a thinner, lower profile design package. Available in cable-to-cable, or broad mount configurations. | MDM C/P Connectors have been tooled in several coaxial layouts and offer versatility by combining coaxial and signal lines in the same connector. | MDM F222 High Temp Series is tested to withstand 200°C continuous operating temperature for 500 hours and meets the harsh environment requirements of the Oil and Gas exploration industries. | MDM F300 High Temp Series is tested to withstand 230°C continuous operating temperature for 500 hours and meets the harsh environment requirements of the Oil and Gas exploration industries. | MIL-DTL-83513 Connectors provide high density, lightweight, field-proven twist pin contact design used in avionics gear, communications equipment and satellites, as well as medical applications. | Hermetically-sealed MDMH Connectors are designed for applications where a vacuum, inert gas or a constant controlled pressure are required to eliminate adverse effects created by atmospheric changes. |
| **Available Layouts** | Plug and Socket | Plug and Socket | Plug and Socket | Plug and Socket | Plug and Socket | Plug and Socket | Plug and Socket | Plug and Socket |
| **Current Rating** | 3A max. | 3A max. | 3A max. | 3A max. | 3A max. | 3A max. | 3A max. | 3A max. |
| **Contact Resistance** | 8 milliohms max. | 8 milliohms max. | 8 milliohms max. | 8 milliohms max. | 8 milliohms max. | 8 milliohms max. | 8 milliohms max. | 24 milliohms max. |
| **Contact Material** | gold plated copper alloy | gold plated copper alloy | gold plated copper alloy | gold plated copper alloy | gold plated copper alloy | gold plated copper alloy | gold plated copper alloy | gold plated copper and steel |
| **Shell** | Metal | Metal | Metal | Metal | Metal | Metal | Metal | Metal |
| **Shell Material** | Aluminum | Aluminum | Aluminum | Aluminum | Steel | Stainless Steel | Aluminum | Steel |
| **Available Layouts** | 9, 15, 21, 25, 31, 37, 51, 69 & 100 | 9, 15, 21, 25, 31, 37, 51, 69 & 100 | 9, 15, 21, 25, 31, 37, 51 | 7C/P2, 24C/P4, 27C/P5 & 10C/P10 | 9, 15, 21, 25, 31, 37, 51 & 69 | 9, 15, 21, 25, 31, 37, 51 & 69 | 9, 15, 21, 25, 31, 37, 51 & 100 | 9, 15, 21, 25, 31, 37 & 51 |
| **Configuration** | Polarized D | Polarized D | Polarized D | Polarized D | Polarized D | Polarized D | Polarized D | Polarized D |
| **RoHS Plating** | Available | Available | Available | Available | Not Available | Not Available | Available | Available |
| **Factory Terminated** | Yes* | Yes | Yes | Yes | Yes | Yes | Yes | Yes* |
| **Space Applications** | Available | Available | Available | Available | Yes | No | Available | Yes |

* Solderpot versions available for end user termination

| | TMDM Filter | MD** | MJS | MIK | MIKM | MIKQ | MT* | MEB |
|---|---|---|---|---|---|---|---|---|
| |  |  |  |  |  |  | 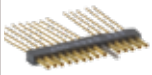 |  |
| **Applications** | MDM Filter Connectors are designed for use in commercial avionics and equipment, with increasing emphasis on EMI, RFI and EMP shielding. | MD** Microminiature Connectors are used in applications requiring highly reliable, extremely small, lightweight plastic connectors. | MJS Jackscrew Series provides a reliable interconnect for board-to-board, board-to-cable and cable-to-cable applications. | MIK Micro Circular Series are rugged yet lighweight and meet or exceed the applicable requirements of MIL-DTL-83513. Applications include biomedical, instrumentation and miniature black boxes. | MIKM Micro Circular Series are rugged yet light-weight and meet or exceed the applicable requirements of MIL-DTL-83513. Application include biomedical, instrumentation and miniature black boxes. | MIKQ Micro Circular Series are rugged yet lightweight and meet or exceed the applicable requirements of MIL-DTL-83513. Application include biomedical, instrumentation and miniature black boxes. | MT Microstrips provide an extremely dense and reliable interconnection solution in a minimum profile package, offering exceptional board-to-wire application flexibility. | Micro Edgeboard (MEB) Series provides a combination of high density and reliability for applications in airborne and space systems, computers and peripherals, and industrial/ commercial control systems. |
| **Available Layouts** | Plug and Socket | Plug and Socket | Plug and Socket | Plug and Socket | Plug and Socket | Plug and Socket | Plug and Socket | Plug and Socket |
| **Current Rating** | 3A max. | 3A max. | 3A max. | 3A max. | 3A max. | 3A max. | 3A max. | 3A max. |
| **Contact Resistance** | 15 milliohms max. | 8 milliohms max. | 8 milliohms max. | 8 milliohms max. | 8 milliohms max. | 8 milliohms max. | 8 milliohms max. | 8 milliohms max. |
| **Contact Material** | gold plated copper alloy | gold plated copper alloy | gold plated copper alloy | gold plated copper alloy | gold plated copper alloy | gold plated copper alloy | gold plated copper alloy | gold plated copper alloy |
| **Shell** | Metal | Plastic | Plastic | Plastic | Metal | Metal | Plastic | Plastic |
| **Shell Material** | Aluminum | Thermoplastic & Thermoset | Thermoplastic & Thermoset | Thermoplastic | Steel | Steel | Thermoplastic | Thermoset |
| **Available Layouts** | 9, 15, 21, 25, 31, 37 & 51 | 9, 15, 21, 25, 31, 37 & 51 | 10, 26, 51 & 66 Rect/ unshrouded 16, 28 & 35 - Rect/shrouded 26, 38, 42 & 76 - Polarized D | 7 & 55 | 7, 55 & 85 | 7, 19 & 37 | MTV - 1 thru 120 MTB - 1 thru 80 | 64, 128, 92 & 184 |
| **Configuration** | Polarized D | Polarized D | Rectangular & Polarized D | Circular | Circular | Circular | | |
| **RoHS Plating** | No | Available | Available | Available | Available | Available | Available | Available |
| **Factory Terminated** | Yes | Yes* | Yes* | Yes | Yes | Yes | Yes | Yes |
| **Space Applications** | Yes | Available | Available | Yes | Yes | Yes | Yes | Yes |

Dimensions shown in ( ) are in mm
Specifications and dimensions subject to change

# Micro-D Metal Shell - .050" Contact Spacing MDM



Cannon MDM Series Microminiature Connectors are used in applications requiring highly reliable, extremely small and lightweight solutions with higher density contact configurations. They are available in eight shell sizes that accommodate from 9 to 100 contacts, as well as special arrangements with power and coaxial contacts. Cannon MDM Series Microminiature Connectors employ size 24 Micro-Pin / Micro-Socket Contacts on .050 (1.27) centers in a contact density identical to the standard Micro-D connector series, but with Aluminum shells to increase strength, prevent chipping, cracking or breaking and provide electromagnetic (EMI and RFI shielding. They also feature a silicone elastomer compression interfacial seal to provide a moisture and humidity seal between each contact and between the contacts and shell.

## Specifications

| Standard Materials and Finishes | |
|---|---|
| Shell | - 6061-T6 Aluminum alloy per QQ-A-200/8, yellow chromate/cadmium, Type II, Class 3 over electroless nickel per SAE AMS-C-26074, Class 4. |
| Insulator | - Liquid Crystal Polymer per MIL-M-24519, Type GLCP-30F (9-100)<br>- Glass filled diallyl phthalate per MIL-M-14, Type SDGF (7*2 and 24*4)<br>- Polyphenylene sulfide per MIL-M-24519, Type GST-40F (16*5)<br>- Polyester per MIL-M-24519, Type GPT-30F (10*10) |
| Contacts | - Copper alloy, gold plate |
| Mounting Hardware | - 300 Series stainless steel, passivated |
| Kit, Jackpost (3) items | - 300 Series stainless steel, passivated |
| Washer | - 400 Series stainless stell, passivated |
| Standard Epoxy | - Hysol EE4215/HD3561, color black<br>- Hysol EE4198/HD3561, color green<br>- Hysol MG40FS molding compound |

| Mechanical Features | |
|---|---|
| Coupling | - Friction/jackscrews |
| Polarization | - Keystone-shaped shells |
| Contact Spacing Centers | - .050 (1.27) |
| Shell Styles | - Plug and receptacle |
| No. of Contacts | 9 thru 100 signal;<br>5 signal/2 coaxial;<br>5 signal/2 power;<br>11 signal/5 coaxial;<br>11 signal/5 power;<br>0 signal/10 coaxial;<br>0 signal/10 power;<br>20 signal/4 coaxial;<br>20 signal/4 power |
| Coaxial Cable | - RG - 178/U |
| Wire Size | - #24 thru #32 AWG |
| Contact Termination | - Multiple indent crimp |

## Performance Data

| Test | Method | Criteria of Acceptance |
|---|---|---|
| Dielectric Withstanding Voltage | Method 3001:<br>600 VAC at sea level<br>150 VAC at 70,00' altitude | No breakdown<br>No breakdown |
| Insulation Resistance | Method 3003 | 5,000 megohms minimum |
| Thermal Shock | Method 1003. Condition A: - 55°C to +125°C | No physical damage |
| Physical Shock | Method 2004, Condition E: 50 G's, 3 axes, 6 millisecond duration sawtooth pulse | No physical damage<br>No loss of continuity > 1 μsec |
| Vibration | Method 2005, Condition IV: 20 G's, 10-20,000 Hz. 12 hrs | No physical damage<br>No loss of continuity > 1 μsec |
| Durability | 500 cycles of mating and unmating, 500 CPH max. | No mechanical or electrical defects |
| Moisture Resistance | Method 1002, Type II, omit steps 7a & 7b | Insulation resistance > 100 megohms |
| Salt Spray | Method 1001, Condition B: 48 hours | Shall be capable of mating and unmating, and meet contact resistance requirements |
| Contact Resistance (MIL-STD-202) | Method 1001, Condition B: At 3 amps<br>At 1 milliamp | 8 milliohms maximum<br>10 milliohms maximum |
| Contact Retention | Per MIL-DTL-83513 | 5 lb. minimum axial load |

# Micro-D Metal Shell - .050" Contact Spacing

## How to Order

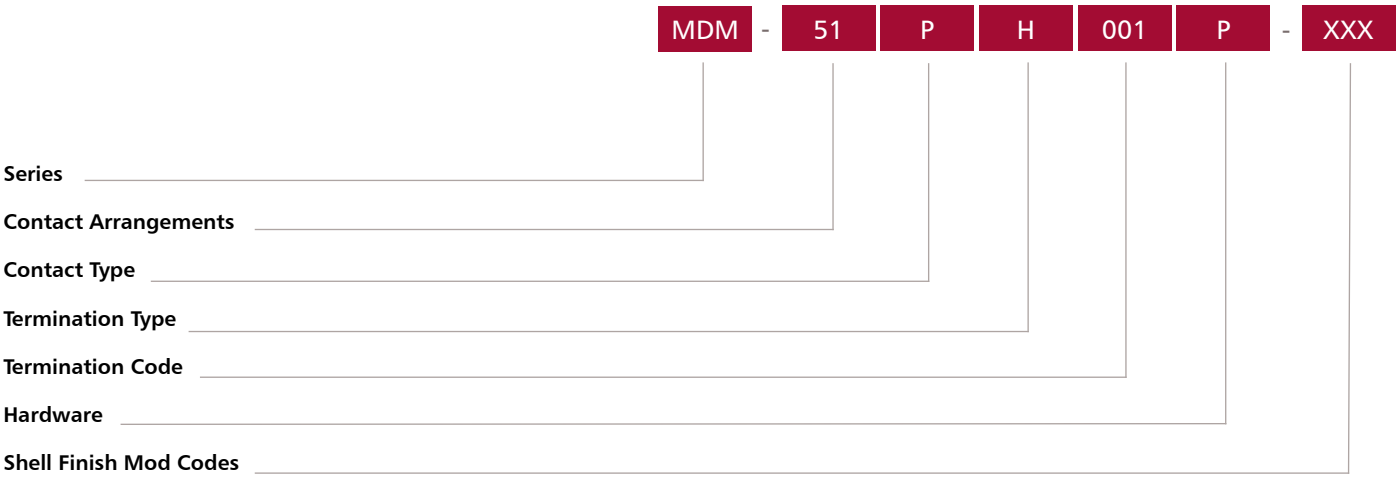


**Series**
MDM - Micro Liquid Crystal Polymer (LCP)
RMDM - RoHS Compliant**

**Contact Arrangements**
9, 15, 21, 25, 31, 37, 51, 69, 100 (standard)
16C5, 10C10, 7C2, 24C4 (coaxial) } Consult Factory for Coax
16P5, 10P10, 7P2, 24P4 (power) } or Power Combo Layouts

**Contact Type**
P - Pin
S - Socket

**Termination Type**
H - Harness-insulated wire.
L - Solid-uninsulated wire.
S - Solder pot to accept #26 AWG MAX. harness wire. (Not available with power contact arrangements.)

**Termination code***
(H) 001 - 18",7/34 strand,#26 AWG, MIL-W-16878/4, Type E Teflon, yellow.
(H) 003 - 18", 7/34 strand, #26 AWG, MIL-W-16878/4, Type E Teflon, color coded to MIL-STD-681 System I.
(L) 1 - 1/2" uninsulated solid #25 AWG gold plated copper.
(L) 2 - 1" uninsulated solid #25 AWG gold plated copper.

* For additional termination codes, please see pages 89-91.

**Hardware Options**
M - Military specification hardware, see page 17 or military hardware codes.
P - Jackpost
K - Jackscrew-standard profile
L - Jackscrew-low profile
F - Float mount
B - No hardware standard. 091 (2.31) dia. hole for sizes 9-51; .120 (3.05) dia. hole for size 100.
A - .125 (3.18) dia. mounting holes for sizes 9-51; 166 (4.22) dia. hole for size 100.
B1 - .1475 (3.75) dia. hole for size 100 (Per MIL-DTL-83513)

**Shell Finish Modification Codes**
No Number - (Standard cadmium/yellow chromate over nickel
A174 - Electroless nickel (RoHS Standard)
A172 - Gold over nickel (RoHS compliant)
A141 - Irridite/alodine
A30 - Black anodize

**Modification Codes**
F222 - High Temp (200°C)*
F234 - 24 AWG Wire
K139 - F222 High (200°C) and F234 (24 AWG Wire)

*For F222, High Temperature information, please reference F222
**If RoHS is required, you must use the "RMDM" suffix for the series, the termination tail will be gold plated; not tinned. RoHS requested parts must include A174 plating modifiers.

RoHS COMPLIANT PART NUMBERS

Dimensions shown in ( ) are in mm
Specifications and dimensions subject to change

## Contact Arrangements

### Face View of Pin insert - Use Reverse Order for Socket Side

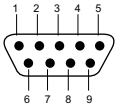


**9 Contacts**

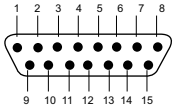


**15 Contacts**

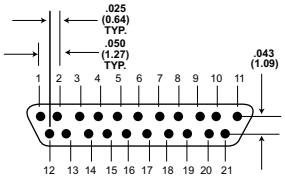


**21 Contacts**

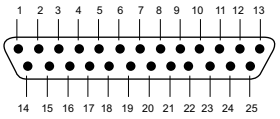


**25 Contacts**

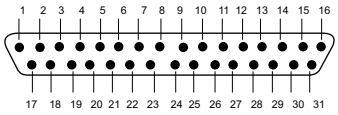


**31 Contacts**

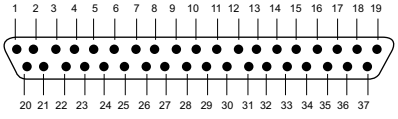


**37 Contacts**

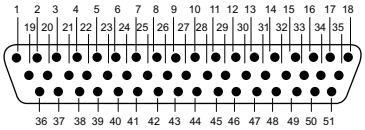


**51 Contacts**

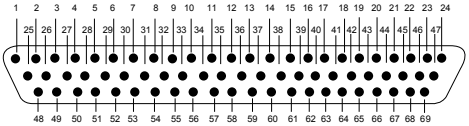


69 Contacts

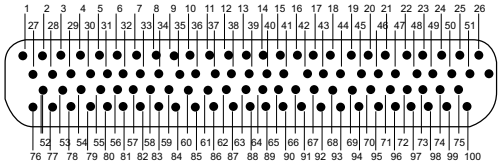


100 Contacts

Contact identication numbers are for reference only and do not appear on insulation or connector body.

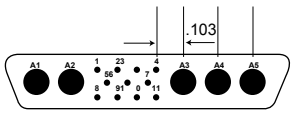


**Size 51 Shell**
**11 Micro contact**
**5 Coax or 5 Power**
**16P5**
**16C5**

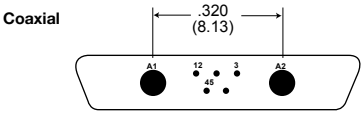


**Size 25 Shell**
**5 Micro contact**
**2 Coax or 2 Power**
**7P2**
**7C2**

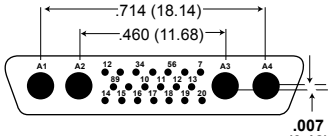


**Size 51 Shell**
**20 Micro contacts**
**4 Coax or 4 Power**
**(Not MS)**
**25P4**
**25C4**

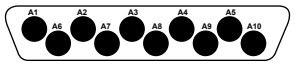


**Size 100 Shell**
**0 Micro contact**
**10 Coax or 10 Power**
**10P10**
**10C10**

# Micro-D Metal Shell - .050" Contact Spacing

(Conforms to MIL-DTL-83513)

## Plug



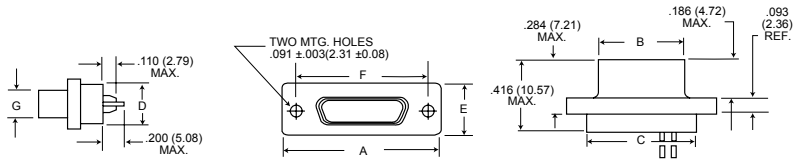


## Receptacle



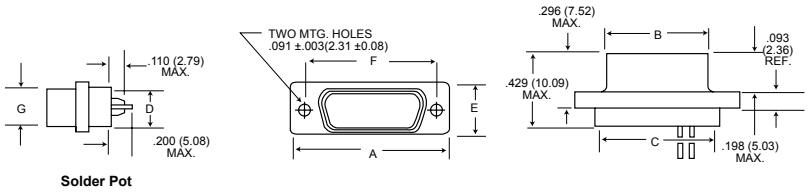


## Receptacle (MDM-100 only)



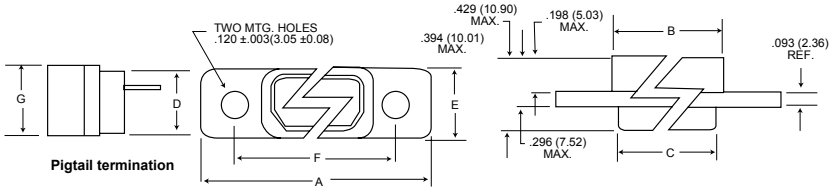


| Part Number By Shell Size | A Max. | B Max. | C Max. | D Max. | E Max. | F +_.005 (0.13) | G Max. | Average Weights** oz. (gm.) ±5% |
|---|---|---|---|---|---|---|---|---|
| MDM-9P* | .785 (19.94) | .334 (8.48) | .400 (10.16) | .270 (6.86) | .308 (7.82) | .565 (14.35) | .185 (4.70) | .063 (1.79) |
| MDM-9S* | .785 (19.94) | .402 (10.21) | .400 (10.16) | .270 (6.86) | .308 (7.82) | .565 (14.35) | .253 (6.43) | .063 (1.79) |
| MDM-15P* | .935 (23.75) | .484 (12.29) | .550 (13.97) | .270 (6.86) | .308 (7.82) | .715 (18.16) | .185 (4.70) | .084 (2.39) |
| MDM-15S* | .935 (23.75) | .552 (13.97) | .550 (13.97) | .270 (6.86) | .308 (7.82) | .715 (18.16) | .253 (6.43) | .083 (2.37) |
| MDM-21P* | 1.085 (27.56) | .634 (16.10) | .700 (17.78) | .270 (6.86) | .308 (7.82) | .865 (21.97) | .185 (4.70) | .105 (2.99) |
| MDM-21P* | 1.085 (27.56) | .702 (17.83) | .700 (17.78) | .270 (6.86) | .308 (7.82) | .865 (21.97) | .253 (6.43) | .104 (2.97) |
| MDM-25P* | 1.185 (30.10) | .734 (18.64) | .800 (20.32) | .270 (6.86) | .308 (7.82) | .965 (24.51) | .185 (4.70) | .119 (3.39) |
| MDM-25S* | 1.185 (30.10) | .802 (20.37) | .800 (20.32) | .270 (6.86) | .308 (7.82) | .965 (24.51) | .253 (6.43) | .118 (3.36) |
| MDM-31P* | 1.335 (33.91) | .884 (22.45) | .950 (24.13) | .270 (6.86) | .308 (7.82) | 1.115 (28.32) | .185 (4.70) | .140 (3.99) |
| MDM-31S* | 1.335 (33.91) | .952 (24.18) | .950 (24.13) | .270 (6.86) | .308 (7.82) | 1.115 (28.32) | .245 (6.43) | .139 (3.96) |
| MDM-37P* | 1.485 (37.72) | 1.034 (26.26) | 1.100 (27.94) | .270 (6.86) | .308 (7.82) | 1.265 (32.13) | .185 (4.70) | .161 (4.59) |
| MDM-37S* | 1.485 (37.72) | 1.102 (27.99) | 1.100 (27.94) | .270 (6.86) | .308 (7.82) | 1.265 (32.13) | .253 (6.43) | .160 (4.56) |
| MDM-51P* | 1.435 (36.45) | .984 (24.99) | 1.050 (26.67) | .310 (7.87) | .351 (8.92) | 1.215 (30.86) | .228 (5.79) | .193 (5.50) |
| MDM-51S* | 1.435 (36.45) | 1.052 (26.72) | 1.050 (26.67) | .310 (7.87) | .351 (8.92) | 1.215 (30.86) | .296 (7.52) | .188 (5.35) |
| MDM-69P | 1.735 (44.07) | 1.348 (34.24) | 1.35 (34.29) | 0.31 (7.87) | 0.351 (8.92) | 1.515 (38.48) | 0.292 (7.42) | .226 (6.407) |
| MDM-69S | 1.735 (44.07) | 1.284 (32.62) | 1.35 (34.29) | 0.31 (7.87) | 0.351 (8.92) | 1.515 (38.48) | 0.228 (5.79) | .216 (6.124) |
| MDM-100P* | 2.170 (55.12) | 1.384 (35.15) | 1.442 (36.63) | .360 (9.14) | .394 (10.01) | 1.800 (45.72) | .271 (6.88) | .500 (14.3) |
| MDM-100S* | 2.170 (55.12) | 1.508 (38.10) | 1.442 (36.63) | .360 (9.14) | .394 (10.01) | 1.800 (45.72) | .394 (10.01) | 1.040 (29.5) |

*Add lead type and length; see How To Order.

***Weight given is 1/2" uninsulated, solid, #25 AWG gold plated copper pigtails.

## Panel Mounting Dimensions (Sizes 9 - 100)

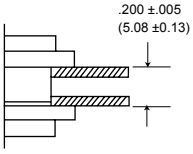


**Plug and Receptacle Rear Mounted**

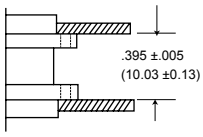


**Plug and Receptacle Front Mounted**

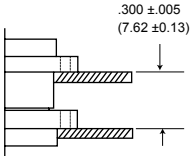


**Plug Front Mounted Receptacle Rear Mounted**

Dimensions shown in ( ) are in mm

Specifications and dimensions subject to change

# Micro-D Metal Shell - .050" Contact Spacing MDM

## Connector Saver



Save wear and tear on your equipment and system connectors with Cannon's MDM Connector Saver. Eliminate multiple mating and de-mating during testing and final checkout by simply mating the "Connector Saver" to your unit and using the opposite side for your testing interface. This result is less wear, less tear and less chance of damage. Our MDM Connector Saver is available in all eight standard MDM layouts. Mating hardware is also available and can be included with the original order, or it may be ordered separately.

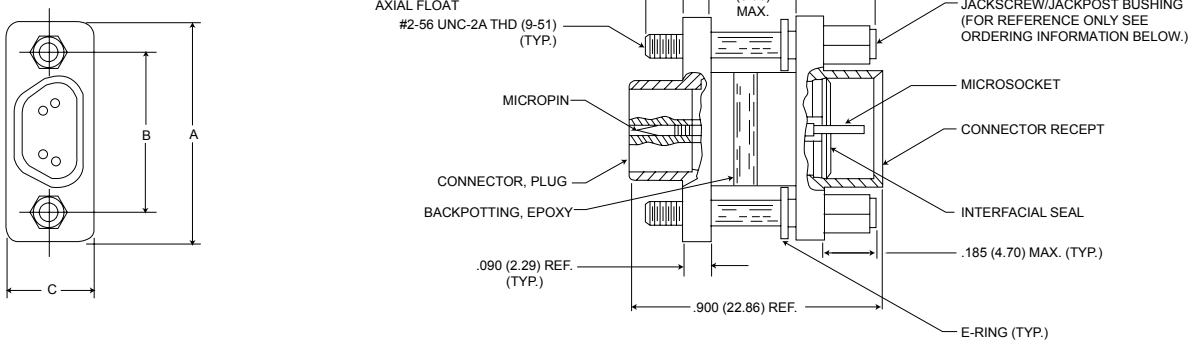


**MDM Size 9 Shown**

| Size | Electroless Nickel (A174) Plated RoHS Compliant | | Cadmium over Nickel (A101) Plated | | *Hardware Kits | A Max. | B ± .005 (0.13) | C Max. |
|---|---|---|---|---|---|---|---|---|
| | With Hardware | W/O Hardware | With Hardware | W/O Hardware | | | | |
| 9 | MDM98479-86 | MDM98479-18 | MDM98479-78 | MDM-97294-371 | 320-9505-014** | .785 (19.94) | .565 (14.35) | .308 (7.82) |
| 15 | MDM98479-87 | MDM98479-19 | MDM98479-79 | MDM-97294-372 | 320-9505-014** | .935 (23.75) | .715 (18.16) | .308 (7.82) |
| 21 | MDM98479-88 | MDM98479-20 | MDM98479-80 | MDM-97294-373 | 320-9505-014** | 1.085 (27.56) | .865 (21.97) | .308 (7.82) |
| 25 | MDM98479-89 | MDM98479-21 | MDM98479-81 | MDM-97294-374 | 320-9505-014** | 1.185 (30.10) | .965 (24.51) | .308 (7.82) |
| 31 | MDM98479-90 | MDM98479-14 | MDM98479-82 | MDM-97294-375 | 320-9505-014** | 1.335 (33.91) | 1.115 (28.32) | .308 (7.82) |
| 37 | MDM98479-91 | MDM98479-15 | MDM98479-83 | MDM-97294-376 | 320-9505-014** | 1.485 (37.72) | 1.265 (32.13) | .308 (7.82) |
| 51 | MDM98479-92 | MDM98479-16 | MDM98479-84 | MDM-97294-377 | 320-9505-014** | 1.435 (36.45) | 1.215 (30.86) | .351 (8.91) |
| 100 | MDM98479-93 | MDM98479-17 | MDM98479-85 | MDM-97294-717 | 320-9508-014** | 2.170 (55.12) | 1.800 (45.72) | .394 (10.01) |

* Kit contains 2 jackpost/jackscrew bushings and 2 E-Rings.
** Size 9-51-#2-56 UNC-2B Thread
*** Size 100-#4-40 UNC-2B Thread

Contact factory for availability of 69 pin Micro

# Micro-D Metal Shell - .050" Contact Spacing



## Panel Cutouts

### Shell Sizes 9 thru 69

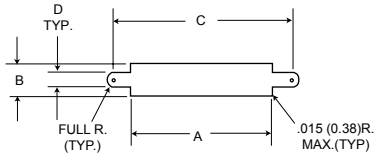


**Figure 1**
**Front Mounting**

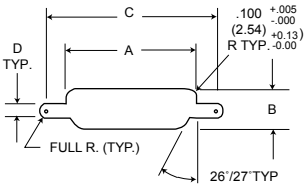


**Figure 2**
**Rear Mounting**

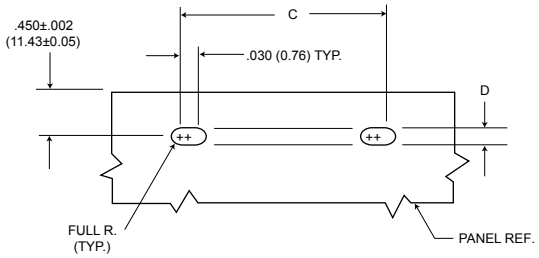


**Figure 3**
**Edgeboard Mounting**

### Shell Size 100

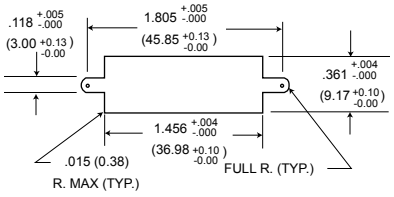


**Figure 1**
**Front Mounting**

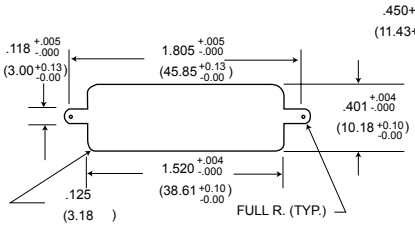


**Figure 2**
**Rear Mounting**

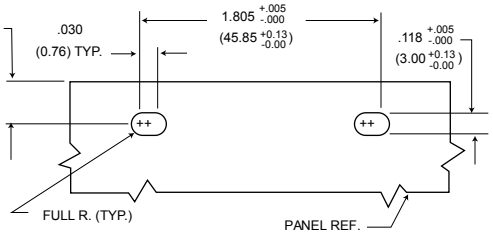


**Figure 3**
**Edgeboard Mounting**

For 9-69 Shell Sizes

NOTES:

1. Front panel mounting is the preferred mounting method. Front panel mounting dimensions (figure 1) will accommodate either #2-56 screws or jackpost hardware.
2. Rear panel mount dimensions (figure 2) will accommodate #2-56 screw hardware only. When mounting the connector with rear panel mount jackpost see the panel cut-out dimensions.
3. Edgeboard mounting bracket (figure 3) uses #2- 56 screws. Dimension .450+/-.002 (11.43+/-0.05) locates the MDM receptacle flush with the end of the board.

For 100 Shell Size

NOTES:

1. Front mounting is the preferred mounting method. Front panel mounting dimensions (figure 1) will accommodate either #4-40 screws or jackpost hardware.
2. Rear panel mount dimensions (figure 2) will accommodate #4-40 screw hardware only see the panel cut-out dimensions.
3. Edgeboard mounting bracket (figure 3) uses #4-40 screws. Dimension .450+/-.002 (11.43+/-0.05) locates the MDM receptacle flush with the end of the board.

| Shell Size | Cutout Figure | A +.004 -.000 | B +.004 -.000 | C +.005 -.000 | D +.005 -.000 |
|---|---|---|---|---|---|
| 9 | 1 | .408 | .271 | .570 | .089 |
| | 2 | .401 | .252 | .570 | .089 |
| | 3 | - | - | .570 | .089 |
| 15 | 1 | .558 | .271 | .720 | .089 |
| | 2 | .551 | .252 | .720 | .089 |
| | 3 | - | - | .720 | .089 |
| 21 | 1 | .708 | .271 | .870 | .089 |
| | 2 | .701 | .252 | .870 | .089 |
| | 3 | - | - | .870 | .089 |
| 25 | 1 | .808 | .271 | .970 | .089 |
| | 2 | .801 | .252 | .970 | .089 |
| | 3 | - | - | .970 | .089 |
| 31 | 1 | .958 | .271 | 1.120 | .089 |
| | 2 | .951 | .252 | 1.120 | .089 |
| | 3 | - | - | 1.120 | .089 |
| 37 | 1 | 1.108 | .271 | 1.270 | .089 |
| | 2 | 1.101 | .248 | 1.270 | .089 |
| | 3 | - | - | 1.270 | .089 |
| 51 | 1 | 1.058 | .315 | 1.220 | .089 |
| | 2 | 1.051 | .295 | 1.220 | .089 |
| | 3 | - | - | 1.220 | .089 |
| 69 | 1 | 1.348 | 0.315 | 1.52 | .089 |
| | 2 | 1.341 | 0.308 | 1.52 | .089 |
| | 3 | - | - | 1.52 | .089 |

Dimensions shown in ( ) are in mm
Specifications and dimensions subject to change

## Mounting Hardware Views (sizes 9-69)

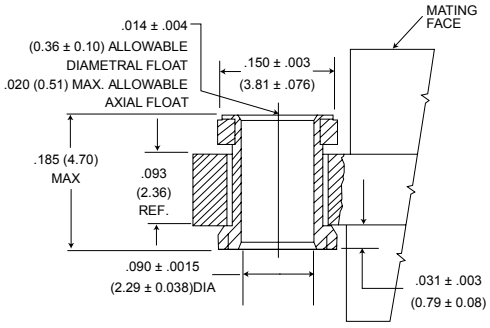


**Float Mount - (F)**

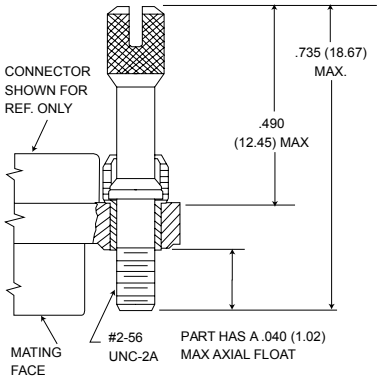


**Jackscrew - (K) Standard Profile**

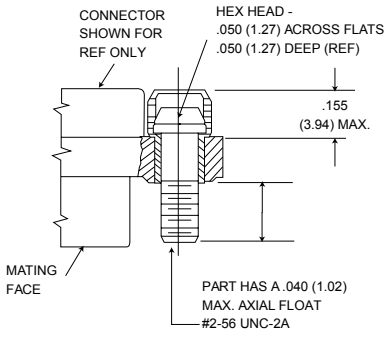


**Jackscrew - (L) Low Profile**

Shown here is a cutaway view of the float mount for the MDM connector. The basic shell dimensions are the same for the float mount and the screw mounting hole configurations. View shown is for standard float mount front panel mounting. Reverse mounting is available on request.

* NOTE: Torque values are as follows:
Low Profile Jackscrew (L)-2.5 in-lbs
Standard Jackscrew (K)-2.5 in-lbs

## Mounting Hardware to Military Specification (for sizes 9-69) per MIL-DTL-83513/5

This hardware supplied in kits unassembled (2 pieces of each item).

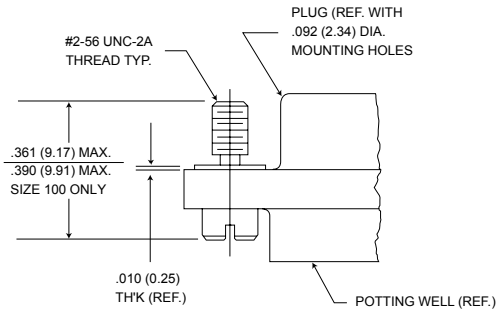


**Figure 1. Jackscrew - Low profile**
**Slotted Head**
Size 9-69
**Size 100***

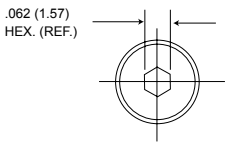


**Allen head**
**Optional Head Configuration**
**Plug and Receptacle**
**Low and High Profile**
**Size 9-51**
**Size 100* (same dimensions)**

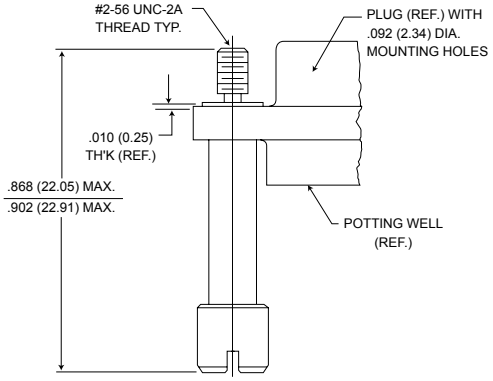


**Figure 2. Jackscrew - High Profile**
**Slotted Head**
Size 9-69
**Size 100***

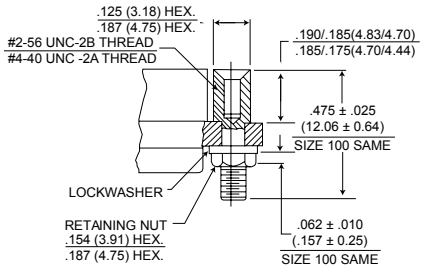


**Figure 3. Jackpost Assembly**
Size 9-69
**Size 100***

*Size 100 requires B1 size mounting holes for Mil-Spec hardware

Note: Torque values as follows:
Size 9-51 4.0 in-lbs
Size 100 6.0 in-lbs

To order hardware kits separately, order either by M83513/5-** or by 320-950X-XXX.

| Description | Size 9-69 Mod Code Part Number | * * | Size 100* Mod Code Part Number | * * |
|---|---|---|---|---|
| Slotted Head Jackscrew Assy Low Profile (Figure 1) | M5 320-9508-025 | 05 | M15 320-9508-021 | 15 |
| Slotted Head Jackscrew Assy Low Profile (Figure 2) | M6 320-9508-027 | 06 | M16 320-9508-023 | 16 |
| Allen Head Jackscrew Assy Low Profile (Figure 1) | M2 320-9508-026 | 02 | M12 320-9508-022 | 12 |
| Allen Head Jackscrew Assy High Profile (Figure 2) | M3 320-9508-028 | 03 | M13 320-9508-024 | 13 |
| Jackpost Assy (Figure 3) | M7 320-9505-033 | 07 | M17 320-9505-030 | 17 |

# Micro-D Metal Shell - .050" Contact Spacing

## Mounting Hardware Views for Front Panel Mount (for sizes 9-69)

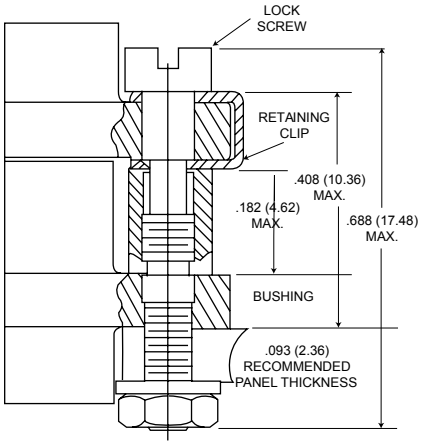


**Screw Lock Assembly***
*NOTE Torque value is 2.5 in/lbs max.

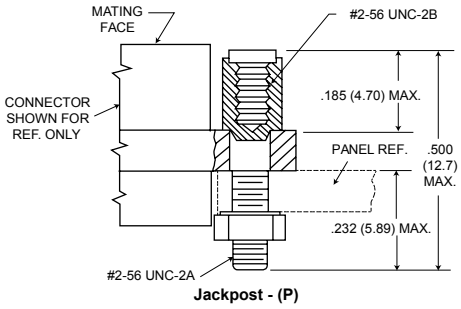


**Jackpost - (P)**

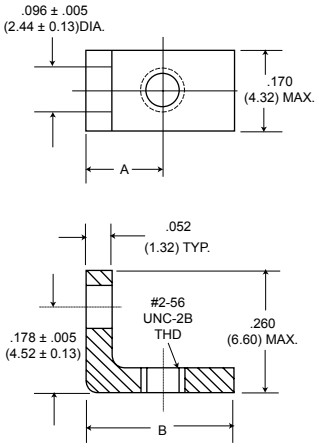


90° Angle Mounting Bracket

| Description | Part Number | A +/-.005 (±0.13) | B +/- .010 |
|---|---|---|---|
| Screw | 322-9500-000 | N/A | |
| Jackpost kit | 320-9505-000 | N/A | |
| Mounting Bracket 90° MDM for 9 thru 37 Shell Sizes | 015-9516-002 | .147 (3.73) | .277 (7.82) |
| Mounting Bracket 90° MDM for 51 Shell Size | 015-9516-003 | .169 (4.29) | .350 (8.89) |

NOTES: Screw lock assembly (322-9500-000) can be used for front mounting only. Jackpost kit (320-9505-000) consists of two assemblies, shipped unassembled.

## Jackpost Bushing (for rear panel mounting-for sizes 9-69)

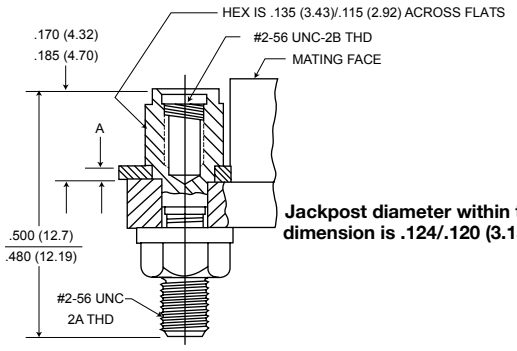


**Jackpost diameter within the "A" dimension is .124/.120 (3.15/3.05).**

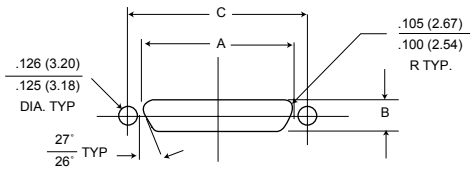


| Panel A Thickness | A +.005 (0.13) -.000 (0.00) | Jackpost Kit Number* |
|---|---|---|
| 3/32 (2.4) | .087 (2.21) | 320-9505-007 |
| 1/16 (1.6) | .056 (1.42) | 320-9505-006 |
| 3/64 (1.2) | .042 (1.07) | 320-9505-005 |
| 1/32 (0.8) | .025 (0.64) | 320-9505-004 |

*A kit consists of 2 jackpost, 2 nuts, 2 washers.

### Plug and Receptacle Dimensions

| Shell Size | A +.004 (0.10) -.000 (0.00) | B +.004 (0.10) -.000 (0.00) | C +_.005 (0.13) |
|---|---|---|---|
| 9 | .401 (10.19) | .252 (6.40) | .565 (14.35) |
| 15 | .551 (14.00) | .252 (6.40) | .715 (18.16) |
| 21 | .701 (17.81) | .252 (6.40) | .865 (21.97) |
| 25 | .801 (20.34) | .252 (6.40) | .965 (24.51) |
| 31 | .951 (24.16) | .252 (6.40) | 1.115 (28.34) |
| 37 | 1.101 (27.97) | .252 (6.40) | 1.265 (32.13) |
| 51 | 1.051 (26.70) | .295 (7.49) | 1.215 (30.86) |
| 69 | 1.351 (34.32) | 0.295 (7.50) | 1.515 (38.48) |

Dimensions shown in ( ) are in mm
Specifications and dimensions subject to change

# Micro-D Metal Shell - .050" Contact Spacing

## Mounting Hardware Views (for size 100)

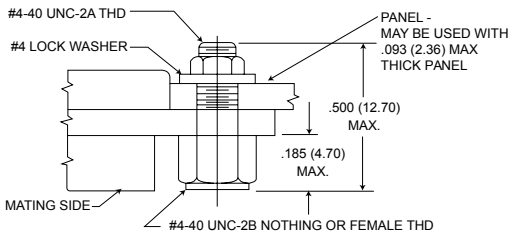


**Jackpost - (P)**

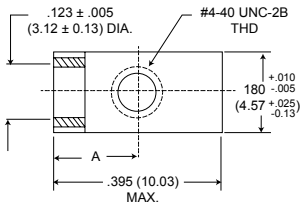


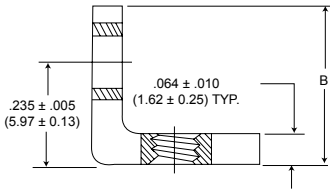


90° Angle Mounting Bracket

| Description | Part Number | A +/-.005 (±0.13) | B Max. |
|---|---|---|---|
| Screw | 322-9500-000 | N/A | |
| Jackpost kit | 320-9505-000 | N/A | |
| Mounting Bracket 90° MDM for 9 thru 37 Shell Sizes | 015-9516-002 | .147 (3.73) | .308 (7.82) |
| Mounting Bracket 90° MDM for 51 Shell Size | 015-9516-003 | .169 (4.29) | .350 (8.89) |

This hardware is factory installed.

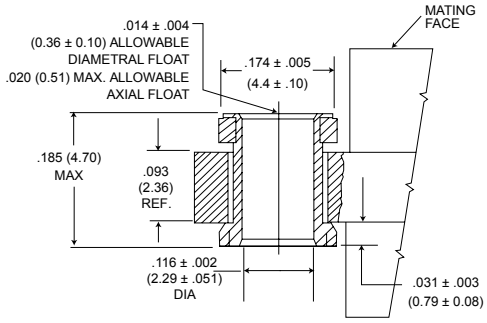


**Float Mount - (F) Std.**

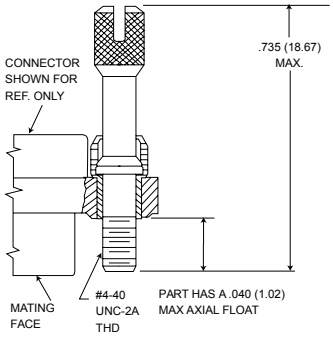


**Jackscrew - (K) Standard**

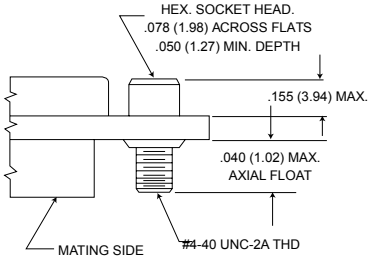


**Jackscrew - (L) (Low Profile)**

*NOTE: Torque values are as follows:
Low Profile Jackscrew (L)-4.0 in-lbs
Standard Profile Jackscrew (K)-4.0 in-lbs

## Jackpost Bushing (for Rear Panel Mounting size 100)

| Panel Thickness | A +.005 (0.13) -.000 (0.00) | Jackpost Kit Number* |
|---|---|---|
| 3/32 (2.4) | .087 (2.21) | 320-9505-013 |
| 1/16 (1.6) | .058 (1.42) | 320-9505-012 |
| 1/32 (0.8) | .025 (0.64) | 320-9505-010 |
| 3/64 (1.2) | .042 (1.07) | 320-9505-011 |

*2 jackposts, 2 nuts, 2 washers

Torque value for size 100
Note: Size 100 requires B mounting hole shell size when using rear panel mount jackposts

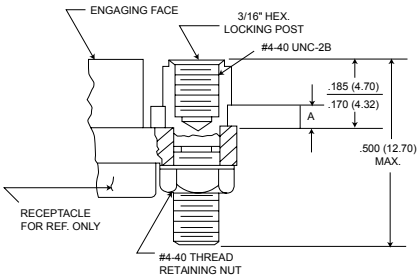


**Dimensions for Rear Panel Mounting**

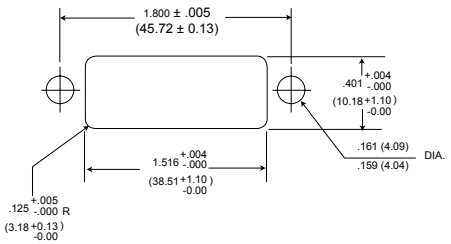

# Micro-D Coaxial/Power Combo - .050" Contact Spacing MDM



Cannon offers three options of the MDM Coaxial/Power Microminiature Connector:

**MDM Coaxial:** The MDM Metal Shell Connectors have been tooled in several coaxial layouts, offering the versatility of combining coaxial & signal lines in the same connector.

**MDM Power:** The same insulator used with coaxial contacts is available with power contacts, offering the versatility of combining power and signal lines in the same connector.

**MDM Coaxial/Power:** Power and coaxial contacts can be interchanged as desired.

## How to Order

| MDM | - | 51 | P | H | 001 | P | - | XXX |
|---|---|---|---|---|---|---|---|---|

**Series**

**Contact Arrangements**

**Contact Type**

**Termination Type**

**Termination Code**

**Hardware**

**Shell Finish Mod Codes**

**Series**
MDM - Liquid Crystal Polymer (LCP)
RMDM - RoHS Compliant MDM**

**Contact Arrangements**
9-15-21-25-31-37-51-100 (standard)
16C5, 10C10, 7C2, 24C4 (coaxial) } or combination of
16P5, 10P10, 7P2, 24P4 (power) } coax and power

**Contact Type**
P - Pin
S - Socket

**Termination Type**
H - Harness-insulated wire.
L - Solid-uninsulated wire.
S - Solder pot to accept #26 AWG MAX. harness wire. (Not available with power contact arrangements)

**Hardware**
M - Military specification hardware, see page 17 for military hardware codes.
P - Jackpost
K - Jackscrew-standard profile
L - Jackscrew-low profile
F - Float mount
B - No hardware standard.091 (2.31) dia. hole for sizes 9-51; .120 (3.05) dia. hole for size 100.
A - .125 (3.18) dia. mounting holes for sizes 9-51; .166 (4.22) dia. hole for size 100.
B1 - .1475 (3.75) dia. hole for size 100 (Per MIL-DTL-83513)

**Termination code***
(H) 001 - 18",7/34 strand,#26 AWG, MIL-W-16878/4, Type E Teflon, yellow.
(H) 003 - 18", 7/34 strand, #26 AWG, MIL-W-16878/4, Type E Teflon, color coded to MIL-STD-681 System I.
(L) 1 - 1/2" uninsulated solid #25 AWG gold plated copper.
(L) 2 - 1" uninsulated solid #25 AWG gold plated copper.

**Shell Finish Modification Codes**
No Number - (Standard cadmium/yellow chromate over nickel)
A174 - Electroless nickel
A172 - Gold over nickel (RoHS Compliant)
A141 - Irridite/alodine (RoHS Compliant)
A30 - Black anodize

**If RoHS is required, you must use the "RMDM" suffix for the series, the termination tail will be gold plated; not tinned. RoHS requested parts must include A174 plating modifiers.

RoHS COMPLIANT PART NUMBERS

* See pp. 89-91 for additional termination codes.

Dimensions shown in ( ) are in mm
Specifications and dimensions subject to change

# Micro-D Coaxial/Power Combo - .050" Contact Spacing MDM-C/P

7C2/7P2

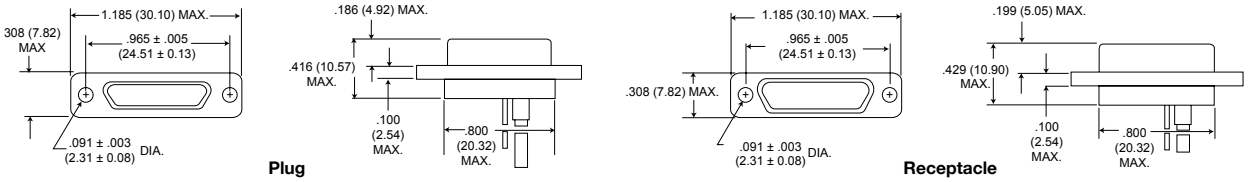


24C4/24P4

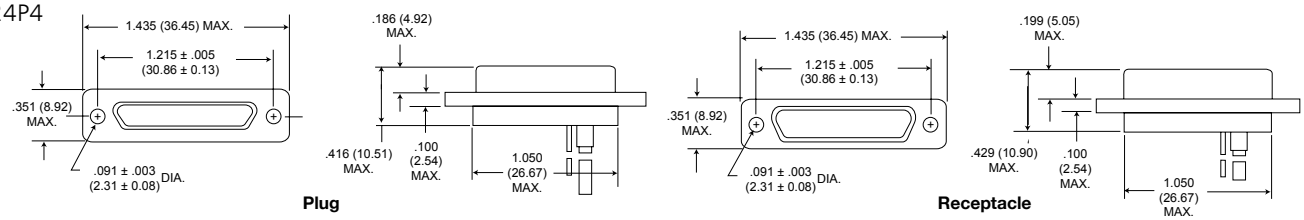


## Power Contacts

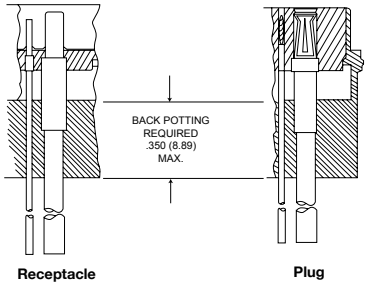


## Coaxial Contacts

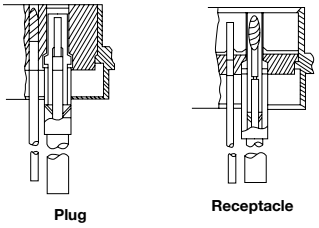

# Micro-D Straight and Right Angle PCB - .050" Contact Spacing

# MDM-PCB



Our MDM-PCB Microminiature Connectors are designed for use with flex circuitry, flat cable and printed circuit boards or multi-layer boards. These interconnects use a standard MDM metal shell and provide high density and high reliability in board-to-board, board-to-cable and cable-to-cable applications. MDM PCB micro connectors are available in 8 shell sizes with 9 to 100 contacts. Terminations may be straight (BS) or at 90° right angle (BR, CBR) board thickness. Jackpost mounting for use with locking hardware is also available.

## How to Order - MDM-PCB Series

| MDM | - | 25 | P | BS | P | - | T | L39 | A174 |
|---|---|---|---|---|---|---|---|---|---|

**Series**

**Contact Arrangements**

**Contact Type**

**Termination Type**

**Mounting Hardware (Shell Flange)**

**Mounting Hardware**

**Termination Tail Length Modification Code**

**Shell Finish Modification Codes**

**Series**
MDM - Micro "D" Metal Shell
RMDM - RoHS Compliant MDM

**Contact Arrangements****
9, 15, 21, 25, 31, 37, 51, and 100

**Contact Type**
P - Pin (Plug)
S - Socket (Receptacle)

**Termination Type**
BS - Straight PCB Termination
BR - Right Angle PCB Termination
CBR - Right Angle Narrow Profile PCB Terminations

**Mounting Hardware (Shell Flange)**
P - Jackpost
M7 - Jackposts M83513/5-07 (Sizes 9-51)
M17 - Jackposts M83513/5-17 (Size 100)
Blank - none

**Mounting Hardware for PCB**
T - Threaded Insert (metal)
#2-56 Thd for Shell Sizes 9 thru 51
#4-40 Thd for Shell Size 100

Blank - none

**Termination Tail Length Modification Code**
Blank - .109 (2.77) ±.015 (0.38) Standard (solder dipped)
L61 - .125 (3.18)
L67 - 140 (3.56)
L56 - .150 (3.81)
L66 - .172 (4.34)
L57 - .190 (4.83)
L39 - .250 (6.35)
L58 - .375 (9.52)

**Shell Finish Modification Codes**
None - Yellow Chromate/Cadmium over Nickel
A174 - Electroless Nickel
A172 - Gold over Nickel (RoHS Compliant)
A141 - Irridite/Alodine (RoHS Compliant)
A30 - Black Anodize
(For special modification codes, consult customer service.)

NOTE: Back molding material – Epoxy Hysol #MG40FS

RoHS COMPLIANT PART NUMBERS

**Consult factory for PCB 69 pin configuration

Dimensions shown in ( ) are in mm
Specifications and dimensions subject to change

# Micro-D PCB - .050" Contact Spacing MDM-PCB

## BS (Board Straight) Series

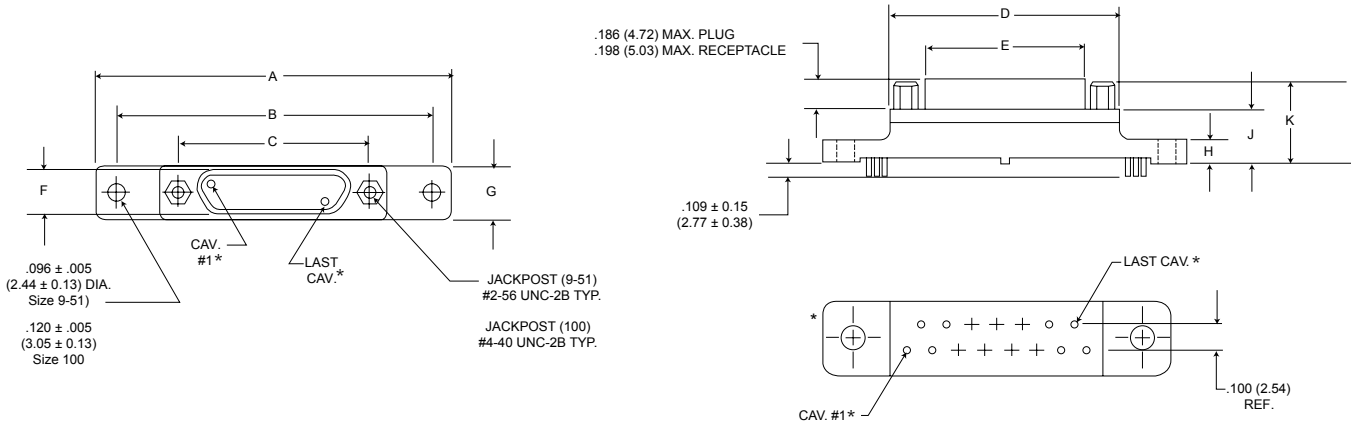


### PCB Termination Arrangements* (Viewed from PCB solder side)

*Identification number shown for plug connector, use reverse order for socket connector.

NOTE: Dimensions shown are for reference only-consult factory for final design dimensions.

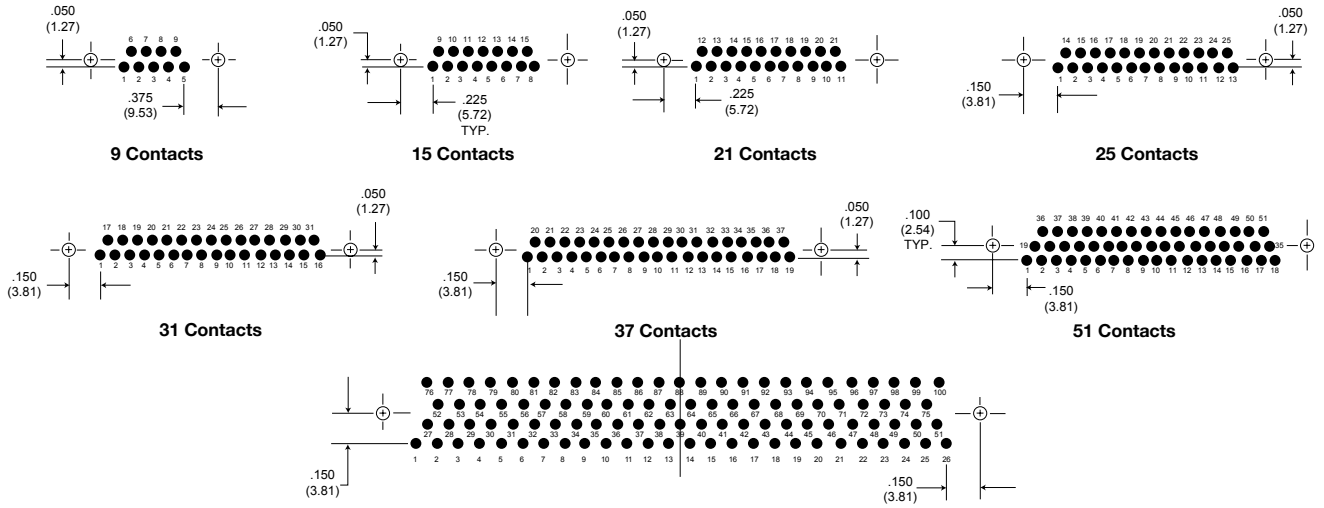


**9 Contacts** **15 Contacts** **21 Contacts** **25 Contacts**

**31 Contacts** **37 Contacts** **51 Contacts**

**100 Contacts**

NOTE: Standard lead termination is #24 AWG, solid copper, solder or tin dipped
All Termination Configurations .100 (2.54) x .100 (2.54) Grid Pattern, Offset .050 (1.27)

| Part Number By Shell Size | A Max. | B ±.007 (.18) | C ±.005 (.13) | D Max. | E Max. | F Max. | G Max. | H Max. | J Max. | K Max. |
|---|---|---|---|---|---|---|---|---|---|---|
| MDM-9PBS* | 1.390 (35.31) | 1.150 (29.21) | .565 (14.35) | .785 (19.94) | .334 (8.48) | .185 (4.70) | .308 (7.82) | .165 (4.19) | .355 (9.02) | .555 (14.10) |
| MDM-9SBS* | 1.390 (35.31) | 1.150 (29.21) | .565 (14.35) | .785 (19.94) | .402 (10.21) | .253 (6.43) | .308 (7.82) | .165 (4.19) | .355 (9.02) | .555 (14.10) |
| MDM-15PBS* | 1.390 (35.31) | 1.150 (29.21) | .715 (18.16) | .935 (23.75) | .484 (12.29) | .185 (4.70) | .308 (7.82) | .165 (4.19) | .355 (9.02) | .555 (14.10) |
| MDM-15SBS* | 1.390 (35.31) | 1.150 (29.21) | .715 (18.16) | .935 (23.75) | .552 (13.97) | .253 (6.43) | .308 (7.82) | .165 (4.19) | .355 (9.02) | .555 (14.10) |
| MDM-21PBS* | 1.690 (43.93) | 1.450 (36.83) | .865 (21.97) | 1.085 (27.56) | .634 (16.10) | .185 (4.70) | .308 (7.82) | .165 (4.19) | .355 (9.02) | .555 (14.10) |
| MDM-21SBS* | 1.690 (43.93) | 1.450 (36.83) | .865 (21.97) | 1.085 (27.56) | .702 (17.83) | .253 (6.43) | .308 (7.82) | .165 (4.19) | .355 (9.02) | .555 (14.10) |
| MDM-25PBS | 1.740 (44.20) | 1.500 (38.10) | .965 (24.51) | 1.185 (30.10) | .734 (18.64) | .185 (4.70) | .308 (7.82) | .165 (4.19) | .355 (9.02) | .555 (14.10) |
| MDM-25SBS* | 1.740 (44.20) | 1.500 (38.10) | .965 (24.51) | 1.185 (30.10) | .802 (20.37) | .253 (6.43) | .308 (7.82) | .165 (4.19) | .355 (9.02) | .555 (14.10) |
| MDM-31PBS* | 2.040 (51.82) | 1.800 (45.72) | 1.115 (28.32) | 1.335 (33.91) | .884 (22.45) | .185 (4.70) | .308 (7.82) | .165 (4.19) | .355 (9.02) | .555 (14.10) |
| MDM-31SBS* | 2.040 (51.82) | 1.800 (45.72) | 1.115 (28.32) | 1.335 (33.91) | .952 (24.18) | .253 (6.43) | .308 (7.82) | .165 (4.19) | .355 (9.02) | .555 (14.10) |
| MDM-37PBS* | 2.340 (59.44) | 2.100 (53.34) | 1.265 (32.13) | 1.485 (37.72) | 1.034 (26.26) | .185 (4.70) | .308 (7.82) | .165 (4.19) | .355 (9.02) | .555 (14.10) |
| MDM-37SBS* | 2.340 (59.44) | 2.100 (53.34) | 1.265 (32.13) | 1.485 (37.72) | 1.102 (27.99) | .253 (6.43) | .308 (7.82) | .165 (4.19) | .355 (9.02) | .555 (14.10) |
| MDM-51PBS* | 2.270 (67.66) | 2.000 (50.80) | 1.215 (30.86) | 1.435 (36.45) | .984 (24.99) | .228 (5.79) | .351 (8.92) | .165 (4.19) | .355 (9.02) | .555 (14.10) |
| MDM-51SBS* | 2.270 (67.66) | 2.000 (50.80) | 1.215 (30.86) | 1.435 (36.45) | 1.052 (26.72) | .296 (7.52) | .351 (8.92) | .165 (4.19) | .355 (9.02) | .555 (14.10) |
| MDM-100PBS* | 3.070 (77.98) | 2.800 (71.12) | 1.800 (45.72) | 2.175 (55.24) | 1.384 (35.15) | .271 (6.88) | .460 (11.68) | .303 (7.70) | .550 (12.70) | .686 (17.42) |
| MDM-100SBS* | 3.070 (77.98) | 2.800 (71.12) | 1.800 (45.72) | 2.175 (55.24) | 1.508 (38.30) | .394 (10.01) | .460 (11.68) | .303 (7.70) | .550 (12.70) | .686 (17.42) |

*For jackpost, add letter "P" or "M7" for sizes 9-51, "M17" for size 100.

# Micro-D PCB - .050" Contact Spacing

# MDM-PCB

## BR (Board Right Angle) Series

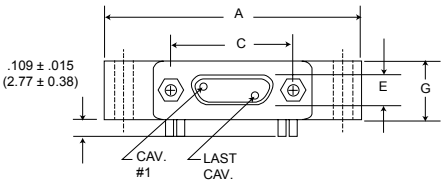


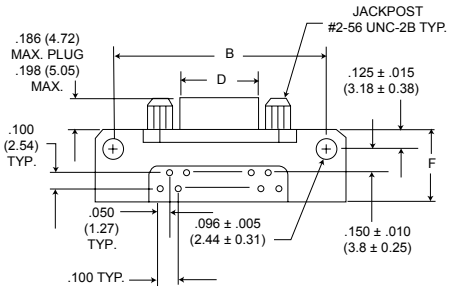


PCB Termination Arrangements (Viewed from bottom of connector, PCB solder side.)

Identification number shown for plug connector, use reverse order for socket connector.

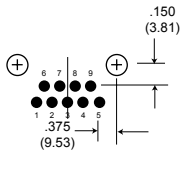


**9 Contacts**

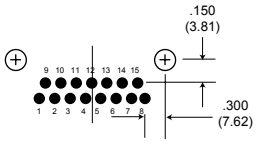


**15 Contacts**

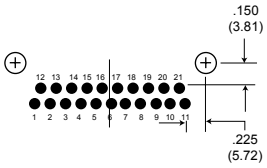


**21 Contacts**

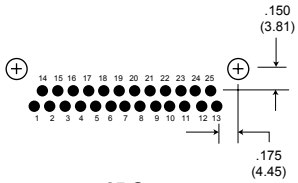


**25 Contacts**

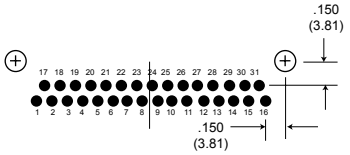


**31 Contacts**

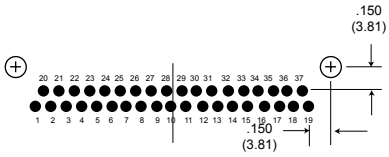


**37 Contacts**

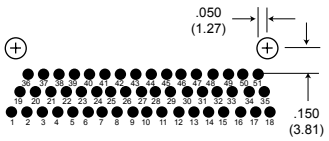


**51 Contacts**

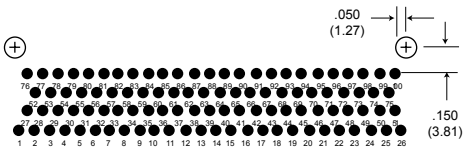


**100 Contacts**

NOTE: Standard lead termination is #24 AWG, gold plated, solid copper, solder or tin dripped.

All Termination Configurations .100 (2.54) x .100 (2.54) Grid Pattern, Offset .050 (1.27).

| Part Number By Shell Size | A Max. | B ± .007 (.18) | C ± .005 (.13) | D Max. | E Max. | F Max. | G Max. |
|---|---|---|---|---|---|---|---|
| MDM-9PBR* | 1.390 (35.31) | 1.150 (29.21) | .565 (14.35) | 334 (8.48) | .185 (4.70) | .455 (11.56) | .308 (7.82) |
| MDM-9SBR* | 1.390 (35.31) | 1.150 (29.21) | .565 (14.35) | .402 (10.21) | .253 (6.43) | .455 (11.56) | .308 (7.82) |
| MDM-15PBR* | 1.540 (39.12) | 1.300 (33.02) | .715 (18.16) | .484 (12.29) | .185 (4.70) | .455 (11.56) | .308 (7.82) |
| MDM-15SBR* | 1.540 (39.12) | 1.300 (33.02) | .715 (18.16) | .552 (13.97) | .253 (6.43) | .455 (11.56) | .308 (7.82) |
| MDM-21PBR* | 1.690 (42.93) | 1.450 (36.83) | .865 (21.97) | .634 (16.10) | .185 (4.70) | .455 (11.56) | .308 (7.82) |
| MDM-21SBR* | 1.690 (42.93) | 1.450 (36.83) | .865 (21.97) | .702 (17.83) | .253 (6.43) | .455 (11.56) | .308 (7.82) |
| MDM-25PBR* | 1.790 (45.47) | 1.550 (39.37) | .965 (24.51) | .734 (18.64) | .185 (4.70) | .455 (11.56) | .308 (7.82) |
| MDM-25SBR* | 1.790 (45.47) | 1.550 (39.37) | .965 (24.51) | .802 (20.37) | .253 (6.43) | .455 (11.56) | .308 (7.82) |
| MDM-31PBR* | 2.040 (51.82) | 1.800 (45.72) | 1.115 (28.32) | .884 (22.45) | .185 (4.70) | .455 (11.56) | .308 (7.82) |
| MDM-31SBR* | 2.040 (51.52) | 1.800 (45.72) | 1.115 (28.32) | .952 (24.18) | .253 (6.43) | .455 (11.56) | .308 (7.82) |
| MDM-37PBR* | 2.340 (59.44) | 2.100 (53.34) | 1.265 (32.13) | 1.034 (26.26) | .185 (4.70) | .455 (11.56) | .308 (7.82) |
| MDM-37SBR* | 2.340 (59.44) | 2.100 (53.34) | 1.265 (32.13) | 1.102 (27.99) | .253 (6.43) | .455 (11.56) | .308 (7.82) |
| MDM-51PBR* | 1.875 (47.63) | 1.600 (40.64) | 1.215 (30.86) | .984 (24.99) | .228 (5.79) | .565 (14.35) | .351 (8.92) |
| MDM-51SBR* | 1.875 (47.63) | 1.600 (40.64) | 1.215 (30.86) | 1.052 (26.72) | .296 (7.52) | .565 (14.35) | .351 (8.92) |
| MDM-100PBR* | 2.74 (69.72) | 2.500 (63.50) | 1.800 (45.72) | 1.384 (35.15) | .271 (6.88) | .755 (19.18) | .394 (10.01) |
| MDM-100SBR* | 2.74 (69.72) | 2.500 (63.50) | 1.800 (45.72) | 1.508 (38.10) | .394 (10.01) | .755 (19.18) | .394 (10.01) |

*For jackpost, add letter "P" or "M7" for sizes 9-51, "M17" for size 100. *Add lead type and length; see How To Order.

Dimensions shown in ( ) are in mm

Specifications and dimensions subject to change

# Micro-D PCB - .050" Contact Spacing

# MDM-PCB

## CBR (Condensed Board Right Angle) Series

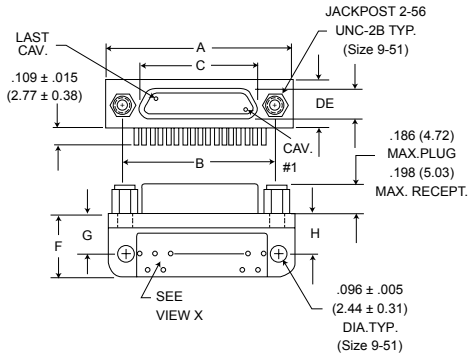


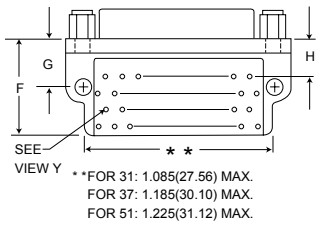


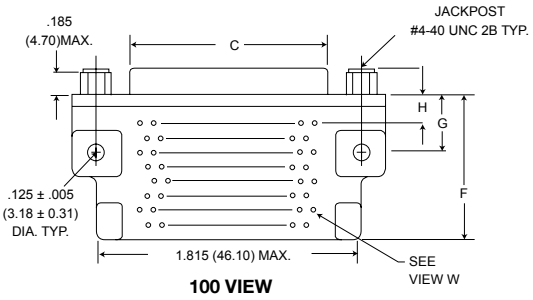


**100 VIEW**

PCB Termination Arrangements (Viewed from bottom of connector, PCB solder side.)

Identification number shown for plug connector, use reverse order for socket connector.

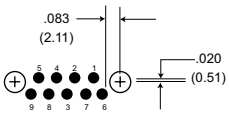


**9 Contacts View X**

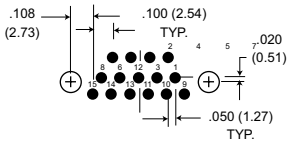


**15 Contacts View X**

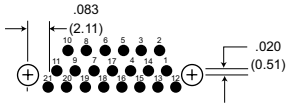


**21 Contacts View X**

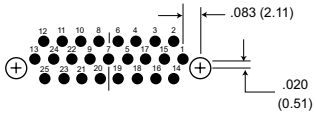


**25 Contacts View X**

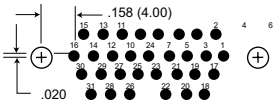


**31 Contacts View Y**

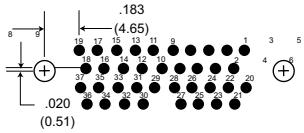


**37 Contacts View Y**

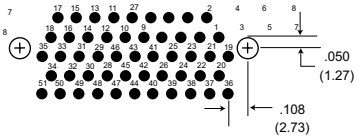


**51 Contacts View Y**

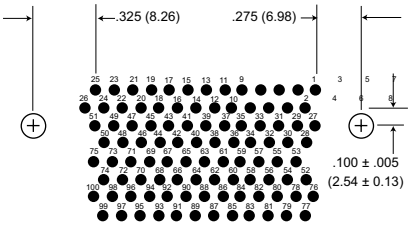


**100 Contacts View W**

All Termination Configurations .100 (2.54) x .100 (2.54) Grid Pattern, Offset .050 (1.27).

NOTE: Standard lead termination is #24 AWG, solid copper, solder or tin dripped.

| Part Number By Shell Size | A Max. | B ± .005 (.13) | C Max. | D Max. | E Max. | F Max. | G ± .010 (.25) | H ± .010 (.25) |
|---|---|---|---|---|---|---|---|---|
| MDM-9PCBR* | .785 (19.94) | .565 (14.35) | 334 (8.48) | 308 (7.82) | .185 (4.70) | 420 (10.67) | .250 (6.35) | .230 (5.81) |
| MDM-9SCBR* | .785 (19.94) | .565 (14.35) | .402 (10.21) | .308 (7.82) | .253 (6.43) | .420 (10.67) | .250 (6.35) | .230 (5.81) |
| MDM-15PCBR* | .935 (23.75) | .715 (18.16) | .484 (12.29) | .308 (7.82) | .185 (4.70) | .420 (10.67) | .250 (6.35) | .130 (3.30) |
| MDM-15SCBR* | .935 (23.75) | .715 (18.16) | .552 (13.97) | .308 (7.82) | .253 (6.43) | .420 (10.67) | .250 (6.35) | .130 (3.30) |
| MDM-21PCBR* | 1.085 (27.56) | .865 (21.97) | .634 (16.10) | .308 (7.82) | .185 (4.70) | .420 (10.67) | .250 (6.35) | .130 (3.30) |
| MDM-21SCBR* | 1.085 (27.56) | .865 (21.97) | .702 (17.83) | .308 (7.82) | .253 (6.43) | .420 (10.67) | .250 (6.35) | .130 (3.30) |
| MDM-25PCBR* | 1.185 (30.10) | .965 (24.51) | .734 (18.64) | .308 (7.82) | .184 (4.70) | .420 (10.67) | .250 (6.35) | .130 (3.30) |
| MDM-25SCBR* | 1.185 (30.10) | .965 (24.51) | .802 (20.37) | .308 (7.82) | .253 (6.43) | .420 (10.67) | .250 (6.35) | .130 (3.30) |
| MDM-31PCBR* | 1.335 (33.91) | 1.115 (28.32) | .884 (22.45) | .308 (7.82) | .185 (4.70) | .520 (13.21) | .250 (6.35) | .130 (3.30) |
| MDM-31SCBR* | 1.335 (33.91) | 1.115 (28.32) | .952 (24.18) | .308 (7.82) | .253 (6.43) | .520 (13.21) | .250 (6.35) | .130 (3.30) |
| MDM-37PCBR* | 1.485 (37.72) | 1.265 (32.13) | 1.034 (26.26) | .308 (7.82) | .185 (4.70) | .520 (13.21) | .250 (6.35) | .130 (3.30) |
| MDM-37SCBR* | 1.485 (37.72) | 1.265 (32.13) | 1.102 (27.99) | .308 (7.82) | .253 (6.43) | .520 (13.21) | .250 (6.35) | .130 (3.30) |
| MDM-51PCBR* | 1.435 (36.45) | 1.215 (30.86) | .984 (24.99) | .351 (8.92) | .228 (5.79) | .650 (16.15) | .300 (7.62) | .150 (3.81) |
| MDM-51SCBR* | 1.435 (36.45) | 1.215 (30.86) | 1.052 (26.72) | .351 (8.92) | .296 (7.52) | .650 (16.15) | .300 (7.62) | .150 (3.81) |
| MDM-100PCBR* | 2.170 (55.12) | 1.800 (45.72) | 1.384 (35.15) | .394 (10.01) | .271 (6.88) | 1.000 (25.40) | .400 (10.16) | .200 (5.08) |
| MDM-100SCBR* | 2.170 (55.12) | 1.800 (45.72) | 1.508 (38.10) | .394 (10.01) | .394 (10.01) | 1.000 (25.40) | .400 (10.16) | .200 (5.08) |

*For jackpost, add letter "P" or "M7" for sizes 9-51, "M17" for size 100.

ITT

Dimensions shown in ( ) are in mm

Specifications and dimensions subject to change

# Micro-D Vertical Mount (CBS) PCB



## How to Order - MDM Vertical Mount, PCB Series

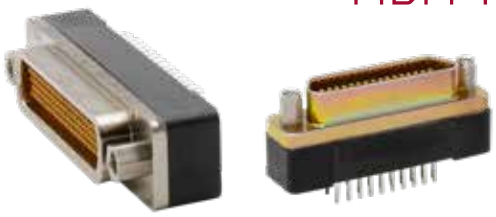

| MDM | - | 25 | S | CBS | P | - | T | L66 | A174 |
|---|---|---|---|---|---|---|---|---|---|

**Series**

**Contact Arrangements**

**Contact Type**

**Termination Type**

**Mounting Hardware (Shell Flange)**

**Mounting Hardware**

**Termination Tail Length Modification Code**

**Shell Finish Modification Codes**

**Series**
MDM - Micro "D" Metal Shell
RMDM - RoHS Compliant MDM*

**Contact Arrangements**
9, 15, 21, 25, 31, 37, 51, 69, and 100

**Contact Type**
S - Socket (Receptacle)
P - Plug

**Termination Type**
CBS - Straight Narrow Profile

**Mounting Hardware (Shell Flange)**
P - Jackpost, Permanently Mounted
R1 - Jackpost - Rear Panel Mount .032 Panel Thickness (shipped loose)
R2 - Jackpost - Rear Panel Mount .047 Panel Thickness (shipped loose)
R3 - Jackpost - Rear Panel Mount .062 Panel Thickness (shipped loose)
R4 - Jackpost - Rear Panel Mount .093 Panel Thickness (shipped loose)
R5 - Jackpost - Rear Panel Mount .125 Panel Thickness (shipped loose)
Blank - Thru Hole

**Mounting Hardware for PCB (Potting)**
T - Threaded Insert (metal)
Blank - none

**Termination Tail Length Modification Code**
Blank - .109 (2.77) ±.015 (0.38) Standard (solder dipped)
L67 - 140 (3.56)
L66 - .172 (4.34)

**Shell Finish Modification Codes**
None - Yellow Chromate/Cadmium over Nickel
A174 - Electroless Nickel (RoHS Compliant)

(For special modification codes, consult customer service.)

*If RoHS is required, you must use the "RMDM" suffix for the series, the termination tail will be gold plated; not tinned. RoHS requested parts must include A174 plating modifiersShell Finish options A174 can be ordered without being RoHS compliant.

RoHS COMPLIANT PART NUMBERS

Dimensions shown in ( ) are in mm
Specifications and dimensions subject to change

## CBS (Board Vertical Mount) Series Shell Size 9 - 37

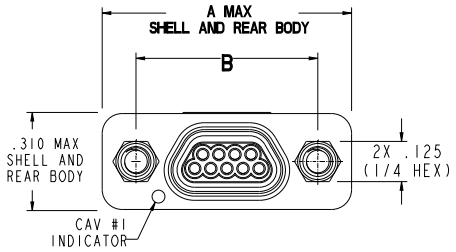


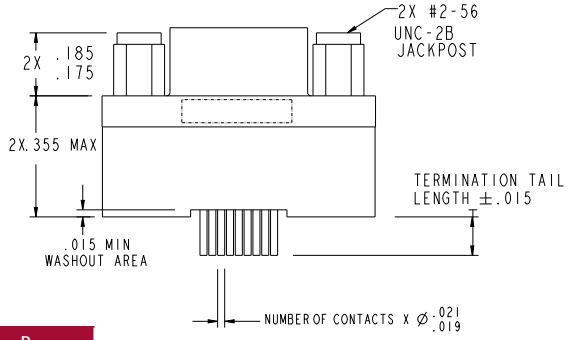


| Shell Size | A Max. | B ± .005 |
|---|---|---|
| 9 | .785 | .565 |
| 15 | .935 | .715 |
| 21 | 1.085 | .865 |
| 25 | 1.185 | .965 |
| 31 | 1.335 | 1.115 |
| 37 | 1.485 | 1.265 |

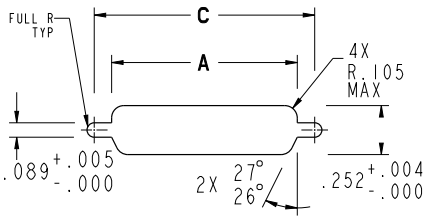


| Shell Size | A +.004 - .000 | C +.005 - .000 |
|---|---|---|
| 9 | .401 | .570 |
| 15 | .551 | .720 |
| 21 | .701 | .870 |
| 25 | .801 | .970 |
| 31 | .951 | 1.120 |
| 37 | 1.101 | 1.270 |

### SIZE 9

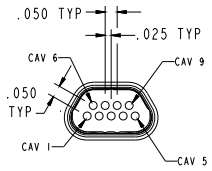


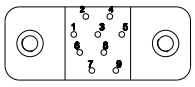

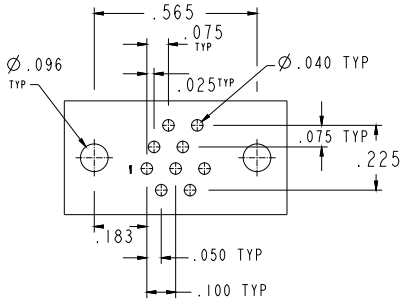


### SIZE 15

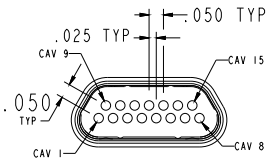


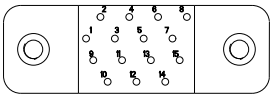

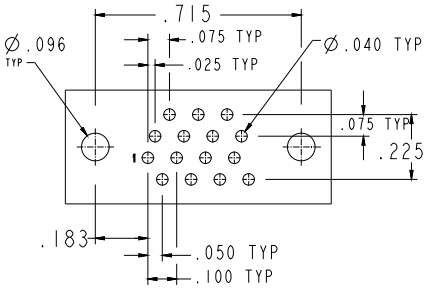

CBS (Board Vertical Mount) Series Shell Size 9 - 37

## SIZE 21

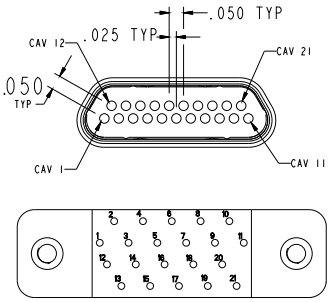


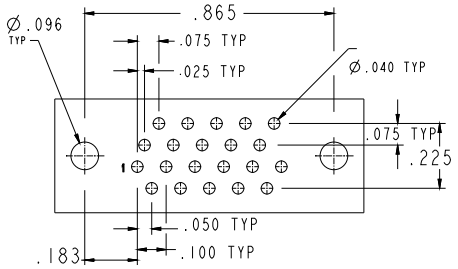


## SIZE 25

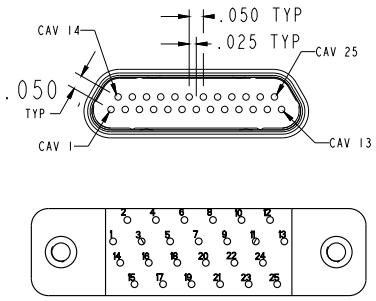


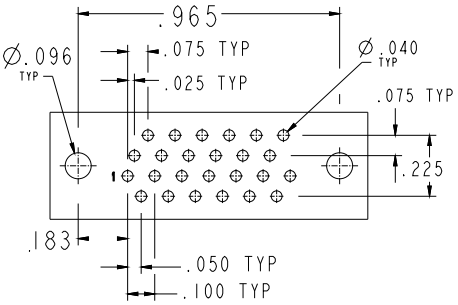


## SIZE 31

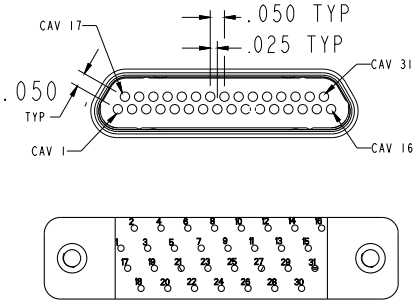


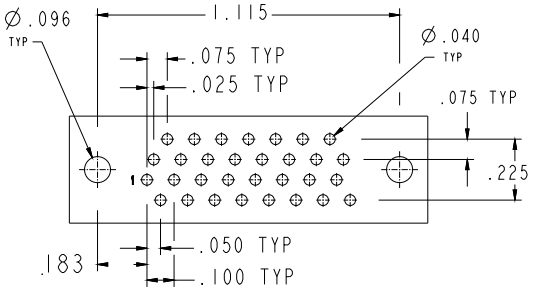


## SIZE 37

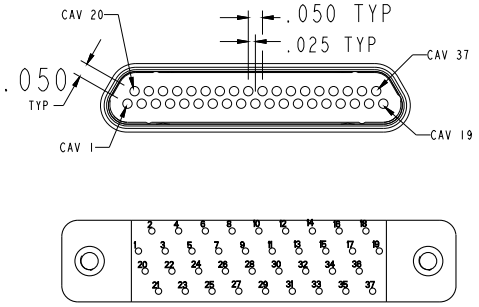


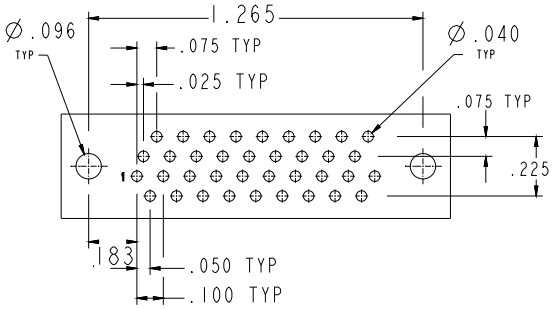


Dimensions shown in ( ) are in mm
Specifications and dimensions subject to change

## CBS (Board Vertical Mount) Series Shell Size 51 - 69

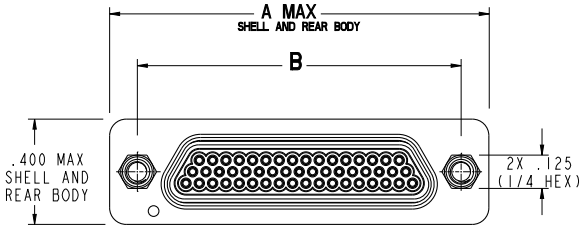


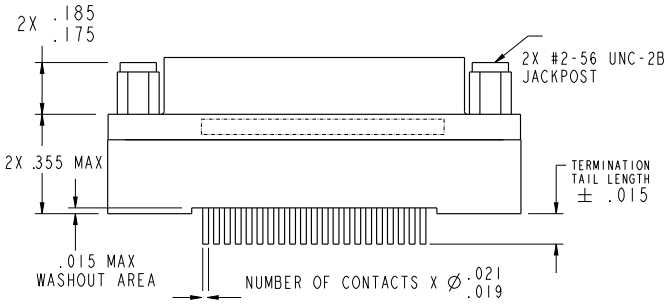


| Shell Size | A Max. | B ± .005 |
|---|---|---|
| 51 | 1.435 | 1.215 |
| 69 | 1.735 | 1.515 |

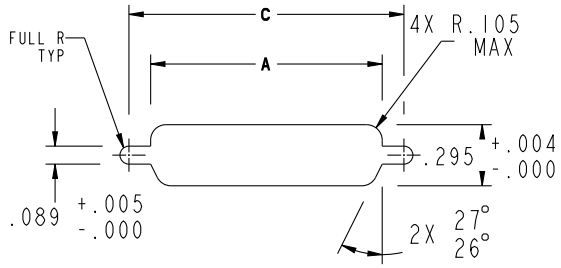


| Shell Size | A +.004 - .000 | C +.005 - .000 |
|---|---|---|
| 51 | 1.501 | 1.220 |
| 69 | 1.801 | 1.520 |

### SIZE 51

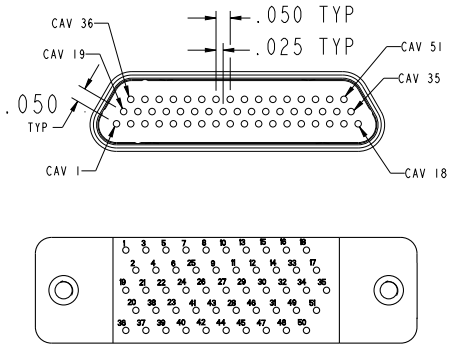


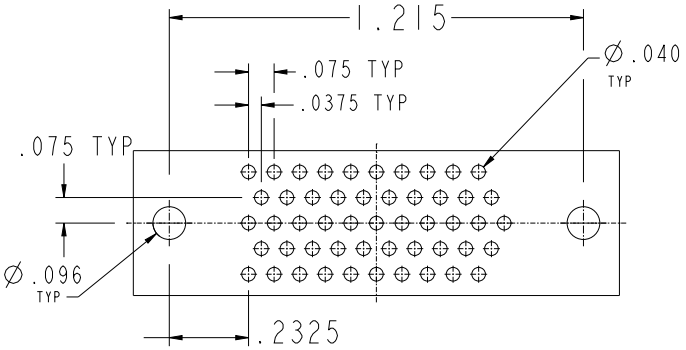


### SIZE 69

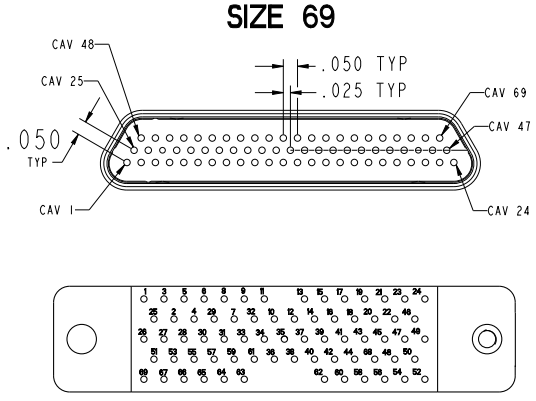


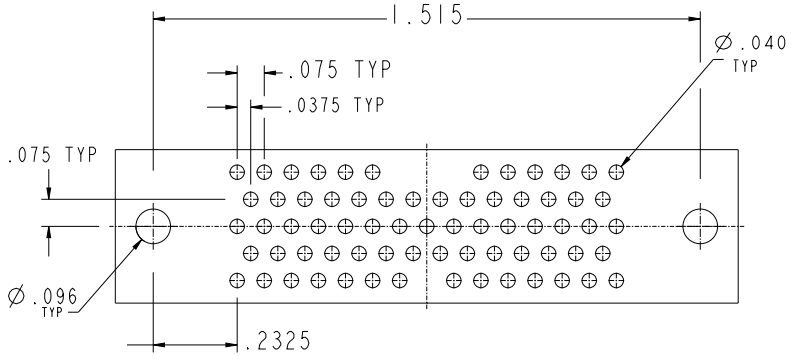

## CBS (Board Vertical Mount) Series Shell Size 100

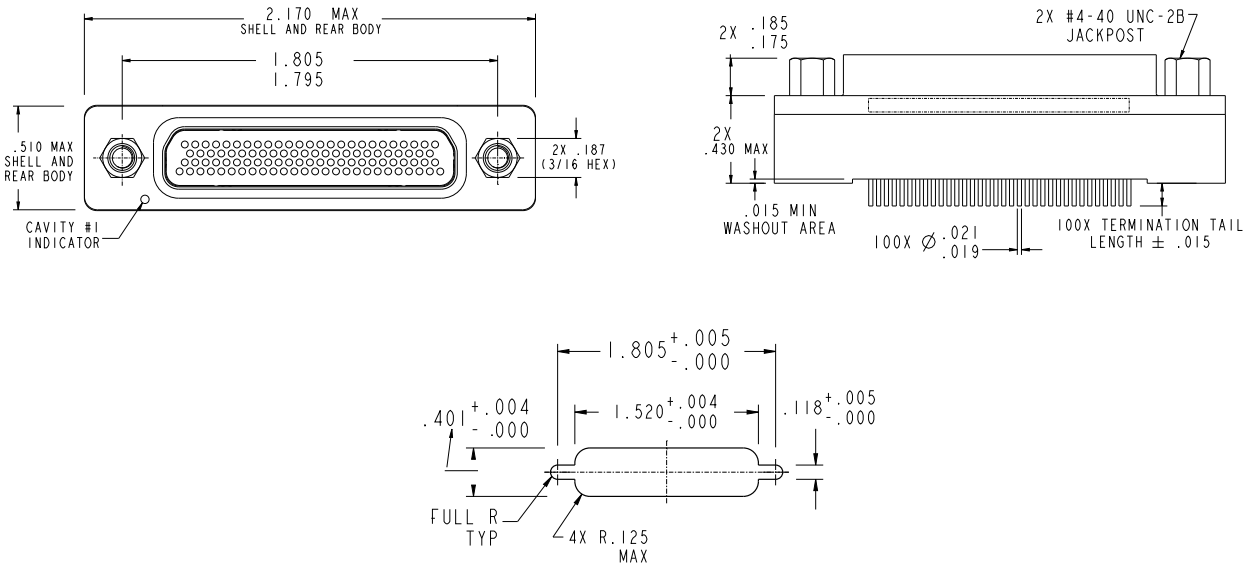


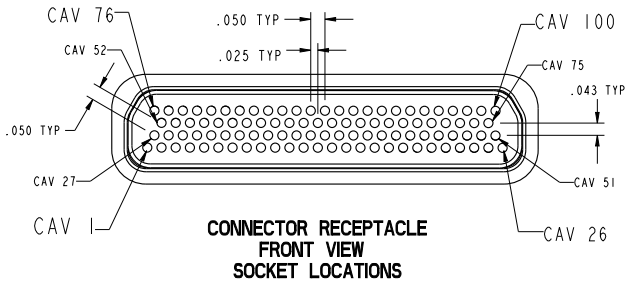


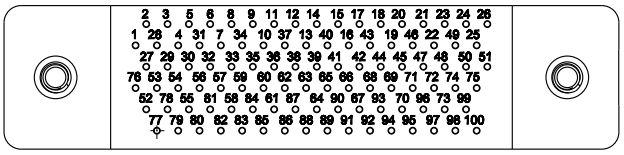


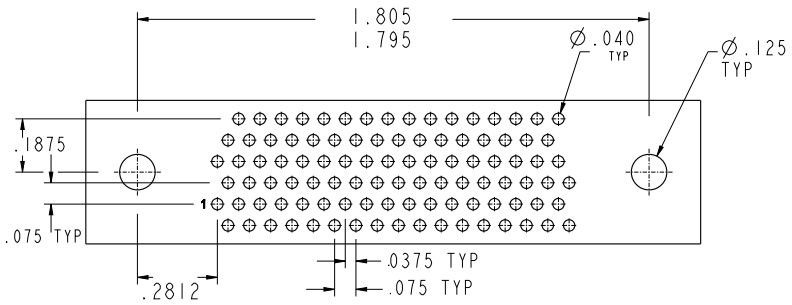


Dimensions shown in ( ) are in mm
Specifications and dimensions subject to change

## CBS (Board Vertical Mount) Mounting & Hardware - Sizes 9 - 37

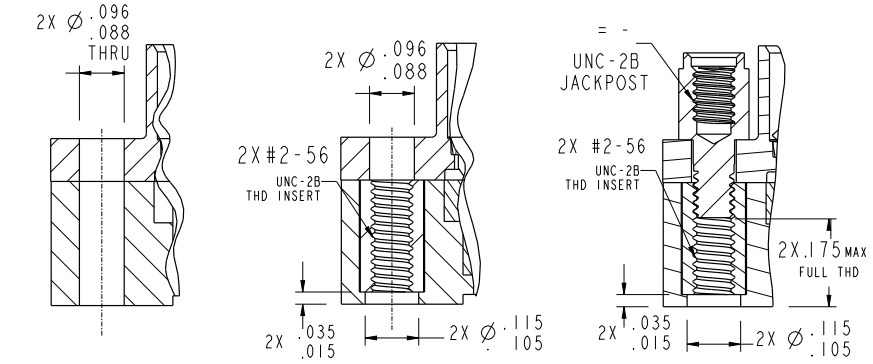


NO HARDWARE
MDM-9S TO 37SCBS(-A***)

THREADED INSERT
MDM-9S TO 37SCBS-T*(-A***)

THREADED INSERT
& JACK-POST INSTALLED
MDM-9S TO 37SCBSP-T*(-A***)

## CBS (Board Vertical Mount) Mounting & Hardware- Size 51 - 69

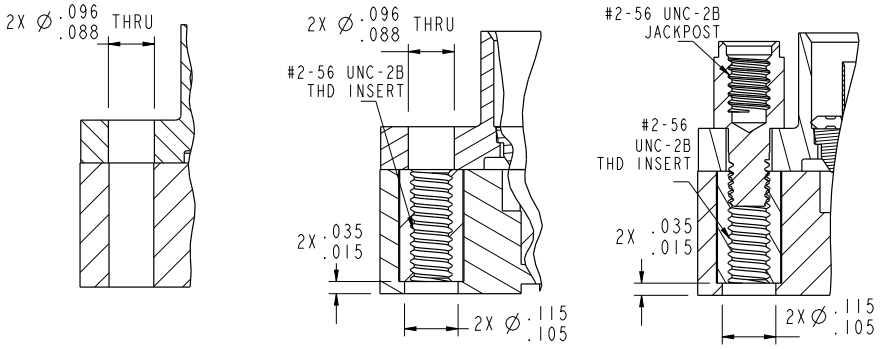


NO HARDWARE
MDM-51S TO 69SCBS-(A***)

THREADED INSERT
MDM-51S TO 69SCBS-T*(-A***)

THREADED INSERT
& JACK-POST INSTALLED
MDM-51S TO 69SCBSP-T*(-A***)

## CBS (Board Vertical Mount) Mounting & Hardware - Size 100

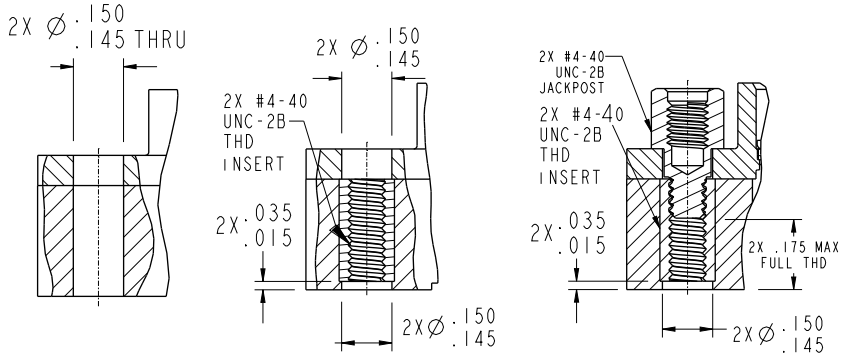


NO HARDWARE
MDM-100SCBS(-A***)

THREADED INSERT
MDM-100SCBS-T*(-A***)

THREADED INSERT &
JACKPOST INSTALLED
MDM-100SCBSP-T*(-A***)

# 200ºC High-Temp Micro-D, Wired Low Profile 0.50" Spacing

# MDLM-F222



Our Micro-D Metal Shell Low Profile Connectors offer the flexibility and small profile that today's electronics systems demand. Using the dielectric footprint of Cannon's MD Series Connector and an aluminum shell designed to be a thinner, lower profile package, ITT Cannon engineers have developed a connector family that meets all of the performance criteria of the Cannon MDM and MIL-DTL-83513 Connectors. The Micro-D Metal Shell Low Profile Series is available in standard cable plugs and receptacles in contact sizes 9 through 51 positions. This family of connectors, like the original MDM series, features Cannon Twist Pin Contact Technology on 0.050 inch spacing.

## Specifications

| | |
|---|---|
| **Material** | 6061-T6 Aluminum Alloy per QQ-A-200/8 |
| **Finishes (-A174)** | Electroless nickel plate per SAE-AMS-C-26074, Class 4m .001-.0015 inch thick |
| **Insulators (9-51** | Liquid Crystalline Polymer per MIL-M-24519, Type GLCP-30F |
| **Contacts** | Gold Plate per MIL-DTL-45204 .000050 inch thick min over Copper Alloy per SAE-AMS-2418 .000010 inch thick min. |
| **Hardware** | 300 Series stainless steel, passivated |
| **Float Mount Washer** | 400 Series stainless steel, passivated |
| **Standard Epoxy** | Hysol EE4215/HD3561, color: black |
| **MECHANICAL FEATURES** | |
| **Coupling** | Friction/Jackscrews |
| **Polarization** | Keystone-shaped shells |
| **Contact Spacing Centers** | .050 (1.27) |
| **No. of Contacts** | 9 thru 51 signal |
| **Wire Size (Standard)** | #25 Solid Wire, #26 Standard Wire |
| **Contact Termination** | Multiple indent crimp |

| Test | Method | Criteria of Acceptance |
|---|---|---|
| Dielectric Withstanding Voltage | Method 3001: 600 VAC at sea level 150 VAC at 70,000 altitude | No breakdown No breakdown |
| Insulation Resistance | Method 3003 | 5,000 megaohms minimum |
| Thermal Shock | Method 1003, condition A: -55° C to +125° C | No physical damage |
| Physical Shock | Method 2004, Condition E: 50 G's, 3 axes, 6 milliseconds duration sawtooth pulse | No physical damage no loss of continuity > 1 μsec |
| Vibration | Method 2005, Condition IV: 20 G's, 10-2,000 Hz. 12 hrs. | No physical damage no loss of continuity > 1 μsec |
| Durability | 500 cycles of mating and unmating, 500 CPH max | No mechanical or electrical defects |
| Moisture Resistance | Method 1002, Type II, omit steps 7a and 7b | Insulation resistance > 100 megaohms |
| Salt Spray | Method 1001, Condition B: 48 Hours | Shall be capable of mating and unmating, and meet contact resistance requirements |
| Contact Resistance MIL-STD-202 | Method 1001, Condition B:<br>at 3 amps<br>at 1 milliamp | <br>8 milliohms maximum<br>10 milliohms maximum |
| Contact Retention | Per MIL-DTL-85313 | 5 lb. minimum axial load |

Dimensions shown in ( ) are in mm
Specifications and dimensions subject to change

# 200°C High-Temp Micro-D, Wired Low Profile 0.50" Spacing

# MDLM-F222

## How to Order | Part Number Nomenclature



MDLM - 25 P 6 P Y 18 L - A174 F222

**Series**
MDLM - MDM Low Profile
RMDLM - RoHS Compliant** MDM Low Profile

**Contact Arrangement**
9, 15, 21, 25, 31, 37 & 51

**Contract Type**
P - Pin
S - Socket

**Wire Gauge (AWG)**
4 - #24 Gauge
6 - #26 Gauge (Standard)
8 - #28 Gauge

**Wire Type**
P - Teflon (PTFE Insulated) Wire Per MIL-W-16878/4 (Standard)
T - Teflon (TFE) Wire Per MIL-W-22759/11
E - Cross-Linked Tefzel (ETFE Insulated) Wire Per MIL-W-22759/33

**Wire Color**
W - White
Y - Yellow (Standard)
S - Color Coded pet MIL-STD-681, System 1
T - Ten Color Repeat

**Overall Wire Length (Inches)**
1 Inch Minimum and Must be Rounded to the Nearest Whole Inch
Examples:
- 5 - 5 inches
- 18 - 18 inches
- 50 - 50 inches
- 120 - 120 inches

**Hardware**
B - No hardware, Ø.091 Hole
A - No hardware, Ø.125 Hole
P - Jackpost
K - Jackscrew-Standard
L - Jackscrew-Low Profile

Military Specification Hardware
M2 - Jackscrew-low profile (Allen Head)
M3 - Jackscrew-standard profile (Allen Head)
M5 - Jackscrew-low profile (Slotted Head)
M6 - Jackscrew-standard profile (Slotted Head)
M7 - Jackpost

**Shell Finish and Material**
A174 - Aluminum with Standard Shell Finish Electroless Nickel (RoHS Compliant)
A172 - Aluminum with Gold over Nickel (RoHS Compliant)
A141 - Aluminum with Irridite/Alodine (RoHS Compliant)
A30 - Aluminum with Black Anodize (RoHS Compliant)

**Mod Codes**
F222 - High Temperature 200°C
(Consult Factory for all other Mod Codes)

*If RoHS is required, you must use the "RMDLM" suffix for the series, the termination tail will be gold plated; not tinned. RoHS requested parts must include A174 plating modifiers

ITT

Dimensions shown in ( ) are in mm
Specifications and dimensions subject to change

# 200°C High-Temp Micro-D, Wired
# Low Profile 0.50" Spacing

MDLM-F222

## Plug

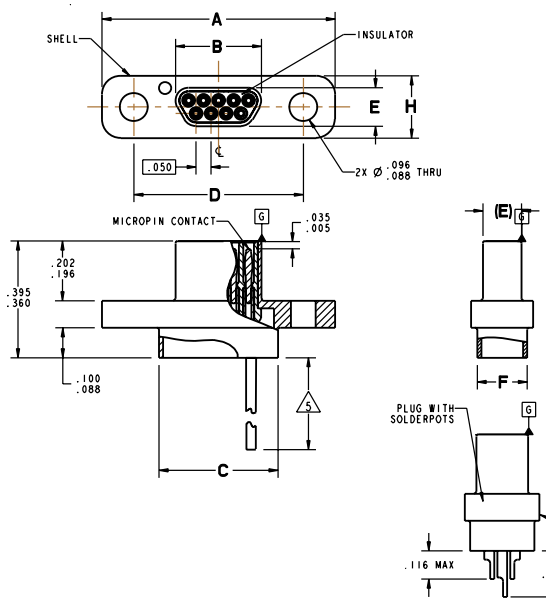


## Receptacle

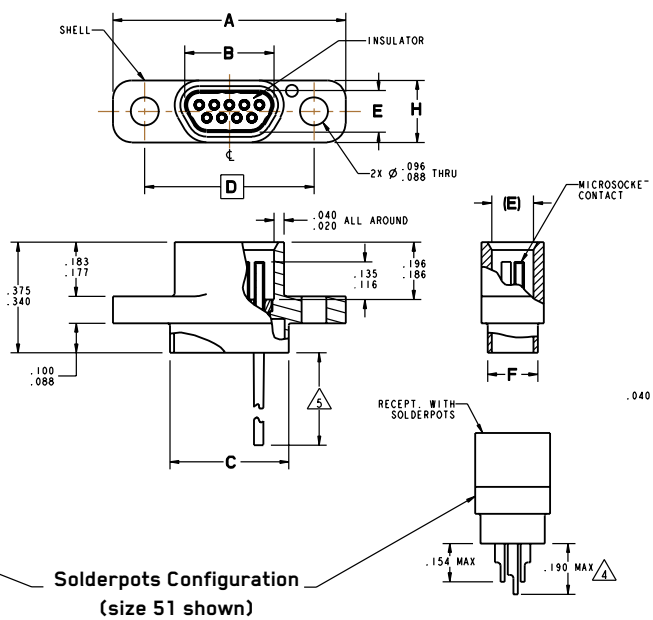


**Solderpots Configuration**
**(size 51 shown)**

| Size | Plug Dimensions | | | | | | |
|---|---|---|---|---|---|---|---|
| | A ± .010 | B Max. | C +10/-18 | D | E Max. | F ± .010 | H Max. |
| -9P | .778 | .2918 | .398 | .565 | .1338 | .173 | .208 |
| -15P | .928 | .4418 | .548 | .715 | | | |
| -21P | 1.078 | .5918 | .698 | .865 | | | |
| -25P | 1.178 | .6918 | .798 | .965 | | | |
| -31P | 1.328 | .8418 | .948 | 1.115 | | | |
| -37P | 1.478 | .9918 | 1.098 | 1.265 | | | |
| -51P | 1.428 | .9418 | 1.048 | 1.215 | .1768 | .220 | .250 |

| Size | Receptacle Dimensions | | | | | | |
|---|---|---|---|---|---|---|---|
| | A ± .010 | B Max. | C +10/-18 | D | E Max. | F ± .010 | H Max. |
| -9S | .778 | .2922 | .398 | .565 | .1342 | .173 | .208 |
| -15S | .928 | .4222 | .548 | .715 | | | |
| -21S | 1.078 | .5922 | .698 | .865 | | | |
| -25S | 1.178 | .6922 | .798 | .965 | | | |
| -31S | 1.328 | .8422 | .948 | 1.115 | | | |
| -37S | 1.478 | .9922 | 1.098 | 1.265 | | | |
| -51S | 1.428 | .9422 | 1.048 | 1.215 | .1772 | .220 | .250 |

Dimensions shown in ( ) are in mm
Specifications and dimensions subject to change

# 200°C High-Temp Micro-D Wired, Low Profile 0.50" Spacing

# MDLM-F222

## Standard Layouts

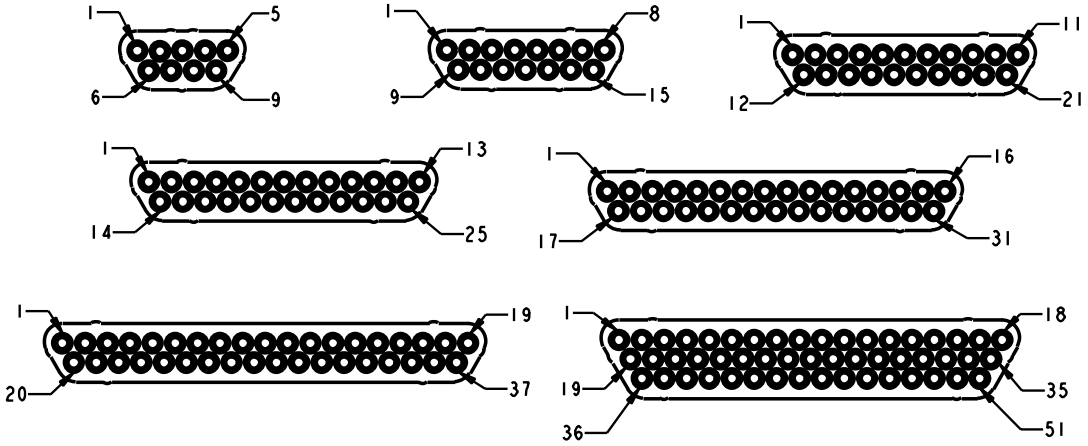


## Panel Cutouts

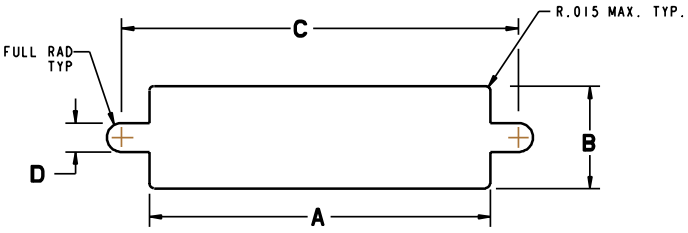


Front Mounting (Preferred)

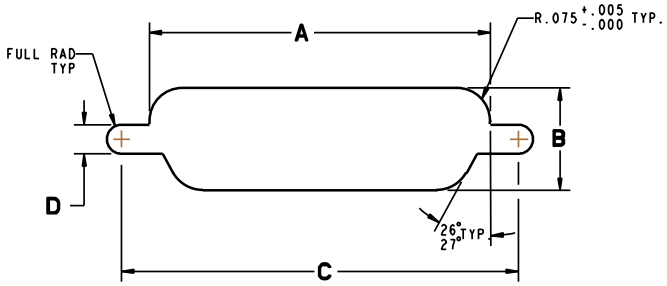


Rear Mounting

| Cutout Dimensions | | | | | |
|---|---|---|---|---|---|
| Shell Size | Cutout Config. | A | B | C | D |
| -9 | Front | .409 | .172 | .570 | .089 |
| | Rear | .379 | .219 | | |
| -15 | Front | .559 | .172 | .720 | |
| | Rear | .529 | .219 | | |
| -21 | Front | .709 | .172 | .870 | |
| | Rear | .679 | .219 | | |
| -25 | Front | .809 | .172 | .970 | |
| | Rear | .779 | .219 | | |
| -31 | Front | .959 | .172 | 1.120 | |
| | Rear | .929 | .219 | | |
| -37 | Front | 1.109 | .172 | 1.270 | |
| | Rear | 1.079 | .219 | | |
| -51 | Front | 1.059 | .215 | 1.220 | |
| | Rear | 1.029 | .261 | | |

Dimensions shown in ( ) are in mm
Specifications and dimensions subject to change

# 200°C High-Temp Micro-D, Board Mount PCB, Low Profile 0.50" Spacing

MDLM-F222

## How to Order | Part Number Nomenclature

### Board Mount PCB

MDLM - 25 P CBR P T L67 A172 - F222

**Series**
MDLM - MDM Low Profile
RMDLM - RoHS Compliant MDM Low Profile

**Contact Arrangement**
9, 15, 21, 25, 31, 37 & 51

**Contact Type**
P - Pin
S - Socket

**Termination Type**
CBR - Right Angle Narrow Profile PCB Termination

**Hardware**
Blank - No hardware, Ø.092 Hole
M* - Military Specification Hardware per: MIL-DTL-83513/5
M7 - Jackpost
*There will be a threaded nut behind flange as to allow later optional Jackpost installation

**Mounting Hardware for PCB**
Blank - Thru-Hole
T - Threaded Insert (Future Offering)

**Termination Tail Length (Gold plated Solid 24 AWG Wire)**
Blank - .109 Inch (Standard)
L67 - .140 inch
L66 - .172 inch

**Shell Finish**
Blank - Electroless Nickel (RoHS Compliant)
A172 - Gold over Nickel (RoHS Compliant)

**Mod Code**
F222 - High Temperature 200°C
(Consult Factory for all other Mod Codes)

Dimensions shown in ( ) are in mm
Specifications and dimensions subject to change

## Plug

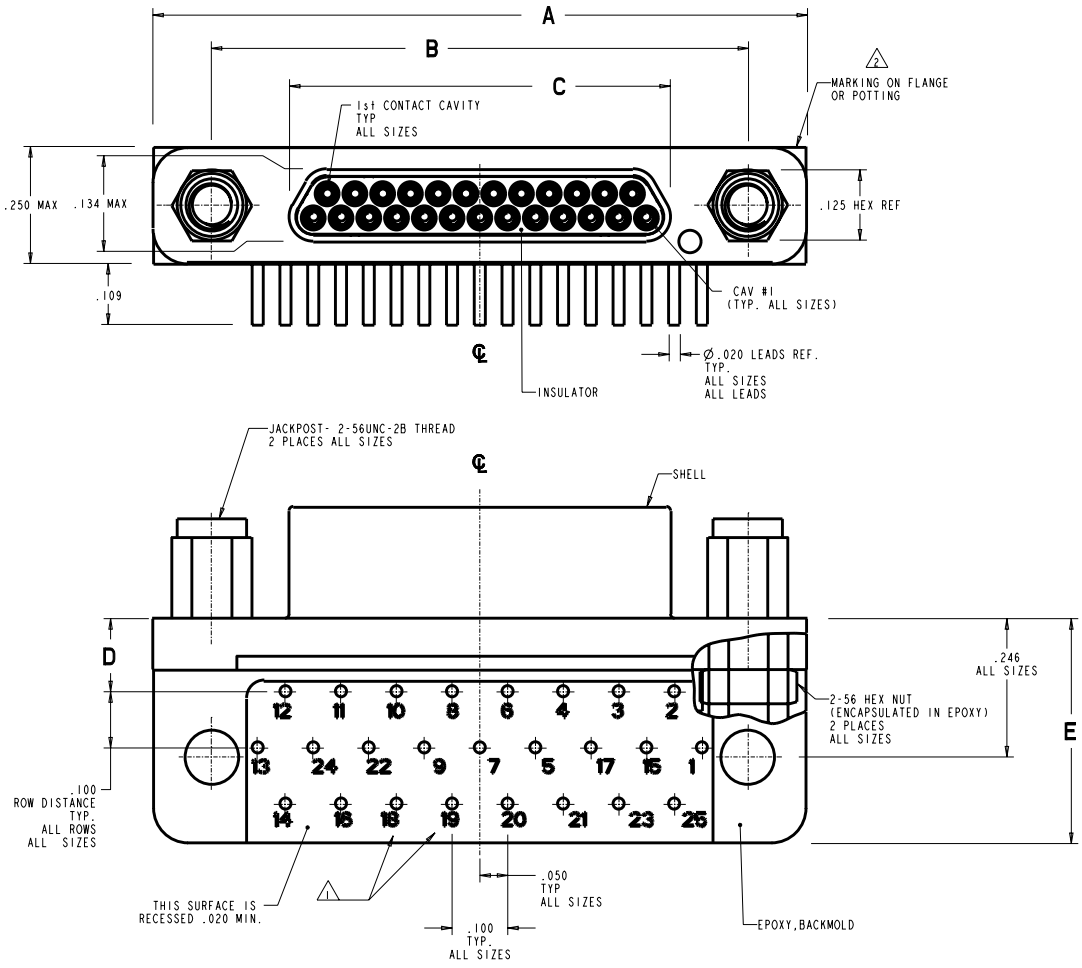


| Size | Plug Dimensions | | | | |
|---|---|---|---|---|---|
| | A Max. | B ± .003 | C Max. | D ± .005 | E Max. |
| 9 | 0.785 | 0.565 | 0.292 | 0.23 | 0.42 |
| 15 | 0.935 | 0.715 | 0.442 | 0.13 | 0.42 |
| 21 | 1.085 | 0.865 | 0.592 | 0.13 | 0.42 |
| 25 | 1.185 | 0.965 | 0.692 | 0.13 | 0.42 |
| 31 | 1.335 | 1.115 | 0.842 | 0.13 | 0.52 |
| 37 | 1.485 | 1.265 | 0.994 | 0.13 | 0.52 |

# 200°C High-Temp Micro-D, Board Mount PCB Low Profile 0.50" Spacing

MDLM-F222

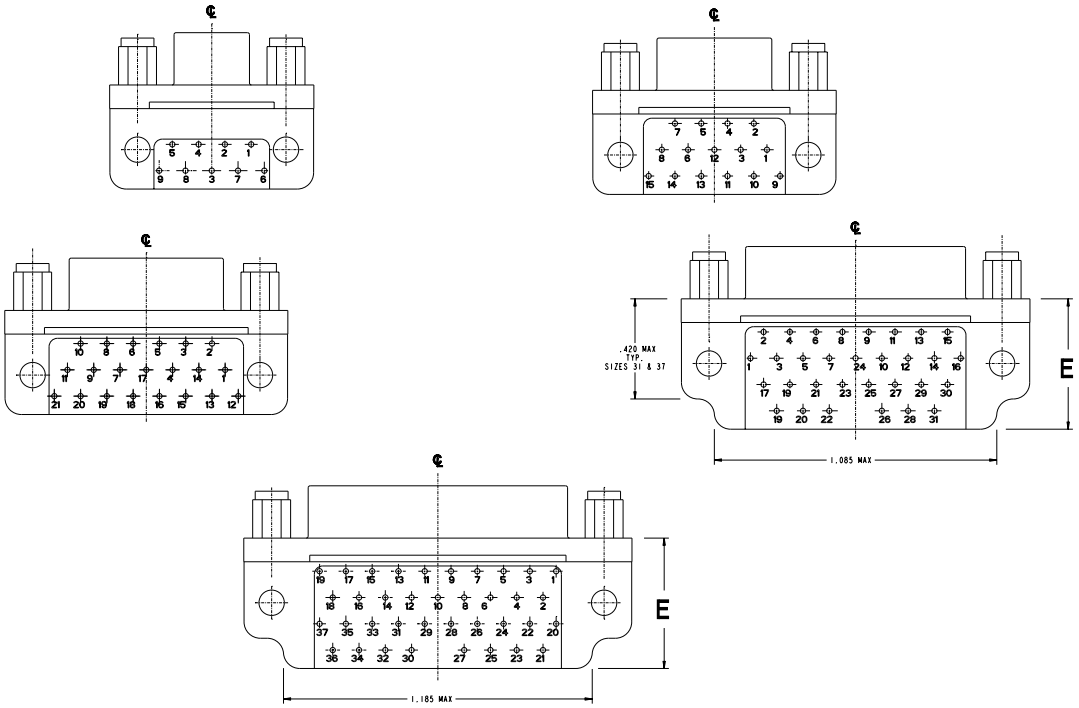


## Panel Cutouts

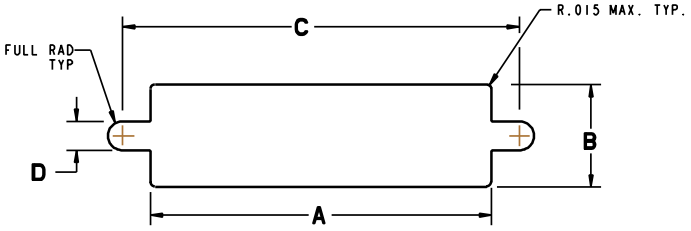


Front Mounting (Preferred)

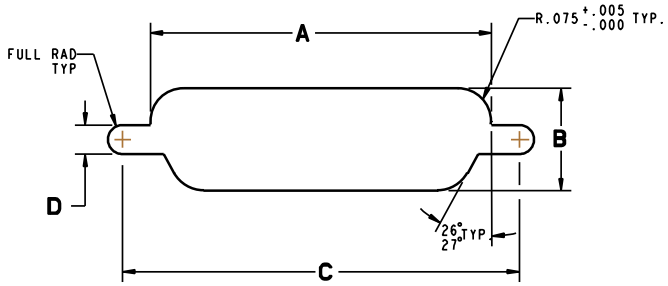


Rear Mounting

| Cutout Dimensions | | | | | |
|---|---|---|---|---|---|
| Shell Size | Cutout Config. | A | B | C | D |
| -9 | Front | .409 | .172 | .570 | .089 |
| | Rear | .379 | .219 | | |
| -15 | Front | .559 | .172 | .720 | |
| | Rear | .529 | .219 | | |
| -21 | Front | .709 | .172 | .870 | |
| | Rear | .679 | .219 | | |
| -25 | Front | .809 | .172 | .970 | |
| | Rear | .779 | .219 | | |
| -31 | Front | .959 | .172 | 1.120 | |
| | Rear | .929 | .219 | | |
| -37 | Front | 1.109 | .172 | 1.270 | |
| | Rear | 1.079 | .219 | | |
| -51 | Front | 1.059 | .215 | 1.220 | |
| | Rear | 1.029 | .261 | | |

Dimensions shown in ( ) are in mm
Specifications and dimensions subject to change

## Recommended American Standard Machine Screws for Connector Float Mounting

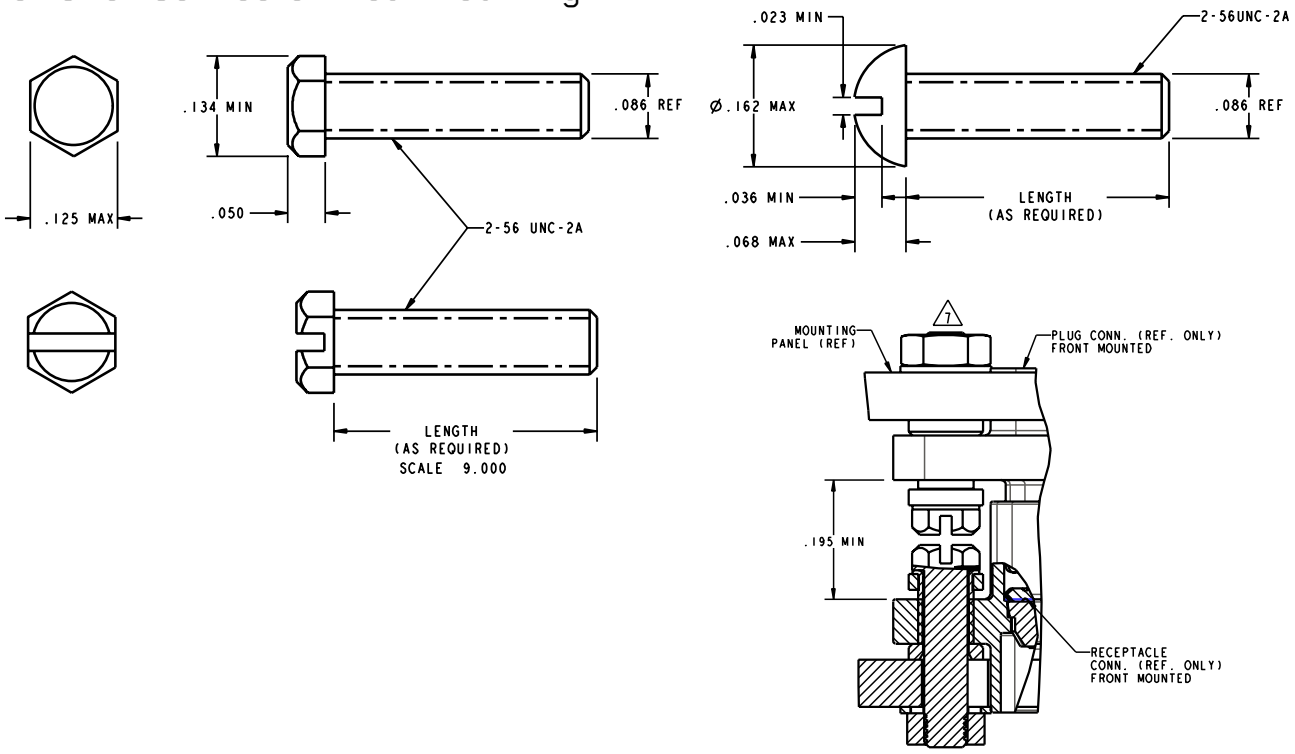


Float Mounting

# 200˚C High Temp Micro-D

# MDM-F222



With the increasing demand for more ruggedized interconnect solutions that can withstand extreme temperatures and operating conditions, our High Temp Micro-MDM F222 leads the industry with exceptional versatility and performance. This highly engineered, highly reliable microminiature interconnect features Cannon Micro Twist Pin Technology and is qualification tested to withstand 200ºC continuous operating temperature for 500 hours.

## Specifications & Options for 200˚C High Temp Micro-MDM F222

**Configurations**

- Terminations
  - Stranded wire
  - Solid wire
  - Solder pots
  - PCB
- Straight
- Right angle
- Condensed right angle
- Signal contacts:
  9, 15, 21,25, 31, 37, 51, 69 100

**Electrical Wire Size**

- Stranded wire:
  - 24 AWG thru 32 AWG
- Solid wire:
  - 25 AWG
- Solder pots:
  - 26 AWG or smaller
- PC tails:
  - 24 AWG

**Material and Finishes**

- Shell material
  - Aluminum alloy
- Shell plating
  - Electroless nickel
  - Yellow chromate /cadmium over nickel
- Insulator
  - Liquid crystal polymer per MIL-M-24519, type GLCP-30F
- At temperatures above 175°C, yellow chromate over cadmium can cause shell discoloration and deterioration of the chromate conversion coating.

## Hardware Configurations

| Commercial | | Per MIL-DTL-83513 | |
|---|---|---|---|
| Code | Description | Code | Description |
| A | No hardware (.125 dia. hole for sizes 9-69 &.166 dia. hole for size 100") | | **Size 9-51** |
| B | No hardware (standard) (.091 dia. hole for size 9-69 & .120 dia. hole for size 100) | M2 | Jackscrew-low profile (allen head) |
| B1 | No hardware (.1475 dia. hole for size 100) | M3 | Jackscrew-standard profile (allen head) |
| F | Float mount | M5 | Jackscrew-low profile (slotted head) |
| K | Jackscrew-standard profile | M6 | Jackscrew-standard profile (slotted head) |
| L | Jackscrew-low profile | M7 | Jackpost |
| P | Jackpost | | **Size 100** |
| | **PCB Only** | M12 | Jackscrew-low profile (allen head) |
| R1 | Rear Panel Mount Jackpost, .032" Panel | M13 | MDM-BT-25TE-SJS |
| R2 | Rear Panel Mount Jackpost, .047" Panel | M15 | Jackscrew-low profile (slotted head) |
| R3 | Rear Panel Mount Jackpost, .062" Panel | M16 | Jackscrew-standard profile (slotted head) |
| R4 | Rear Panel Mount Jackpost, .093" Panel | M17 | Jackpost |

## Termination Modification Codes

| Stranded Teflon® Wire per MIL-W-16878/4 (H) | | | Solid Uninsulated Wire (L) | |
|---|---|---|---|---|
| Length | All Yellow | Color Coded | Termination Code | Length |
| 3 (76.2) | H020 | H027 | L61 | .125 (3.18) |
| 6 (152.4) | H019 | H016 | L56 | .150 (3.81) |
| 8 (203.2) | H026 | H034 | L57 | .190 (4.83) |
| 10 (254.0) | H029 | H025 | L39 | .250 (6.35) |
| 12 (304.8) | H028 | H002 | L58 | .375 (9.52) |
| 18 (457.2) | H001 | H003 | L1 | .500 (12.70) |
| 20 (508.0) | H038 | H023 | L14 | .750 (19.05) |
| 24 (609.6) | H009 | H004 | L2 | 1.000 (25.40) |
| 30 (762.0) | H010 | H005 | L7 | 1.500 (38.10) |
| 36 (914.4) | H011 | H006 | L6 | 2.000 (50.80) |
| 48 (1219.2) | H013 | H048 | L16 | 2.500 (63.50) |
| 72 (1828.8) | H017 | H046 | L10 | 3.000 (76.20) |
| 120 (3048.0) | H042 | H041 | | |

The above termination MODs are the most frequently ordered. For additional codes please see pp. 80-82

Dimensions shown in ( ) are in mm
Specifications and dimensions subject to change

# 200°C High Temp Micro-MDM F222

How to Order | Part Number Configurator



200 °C

## Wired & Solder Pot

| R | - | MDM | 25 | P | H | 003 | M2 | A174 | - | F222 |
|---|---|---|---|---|---|---|---|---|---|---|

**RoHS Compliant**

**Series**
MDM - MD Metal Shell

**Contact Arrangement**
9, 15, 21, 25, 31, 37, 51, 69 & 100

**Contact Type**
P - Pin
S - Socket

**Termination Type**
H - Insulated Stranded Wire
L - Uninsulated Stranded Wire
S - Solderpot

**Termination Modified Code**
See Termination Modification table for Harness Types (H) & Solid Uninsulated Types (L)

**Hardware**

Commercial
A - No hardware (.125 dia. hole for sizes 9-51 &.166 dia. hole for size 100")
B - No hardware (standard) (.091 dia. hole for size 9-51 & .120 dia. hole for size 100)
B1 - No hardware (.1475 dia. hole for size 100)
F - Float mount
K - Jackscrew-standard profile
L - Jackscrew-low profile M7 Jackpost
P - Jackpost

Military Size 9-51
M2 - Size Jackscrew-low profile (allen head)
M3 - Jackscrew-standard profile (allen head)
M5 - Jackscrew-low profile (slotted head)
M6 - Jackscrew-standard profile (slotted head)
M7 - Jackpost

Military Size 100
M12 - Jackscrew-low profile (allen head)
M13 - Jackscrew-standard profile (allen head)
M14 - Jackscrew-low profile (slotted head)
M16 - Jackscrew-standard profile (slotted head)
M17 - Jackpost

**Shell Finish**
Blank - Yellow Chromate/Cadmium (Not RoHS Compliant)
A174 - Electroless Nickel (RoHS Compliant)

**Mod Code**
F222 - High Temperature 200°C

***If RoHS is required, you must use the "RMDM" suffix for the series, the termination tail will be gold plated; not tinned. RoHS requested parts must include A174 plating modifiers Shell Finish options A174 and A172 can be ordered without being RoHS compliant.

# 230˚C Ultra-High Temp Micro MDM F300



## How to Order | Part Number Configurator

230 °C



The Ultra-High Temp Micro-MDM series is qualification tested to withstand 230ºC continuous operating temperature for 500 hours and meets the harsh requirements of the Oil and Gas exploration industries. Cannon's Ultra-High Temp Micro-MDM F300 connector is designated by an F300 modification code and uses high performance Micro Twist Pin Contacts, special insulating materials and high temperature wire.

| MDM | - | 25 | P | R | 030 | L | - | F300 |
|---|---|---|---|---|---|---|---|---|

**Series**
MDM - MD Metal Shell

**Contact Arrangement**
9, 15, 21, 25, 31, 37, 51 & 69

**Contact Type**
P - Pin
S - Socket

**Termination Type**
R - Insulated Standards Wire
S - Solder Pot

**Termination Modified Code**
See high-temp wire table.
Applies to both wire lenght and type.

**Hardware**

P - Jackpost

R1 - Rear Panel Mount Jackpost .032" Panel

R2 - Rear Panel Mount Jackpost .047" Panel

R3 - Rear Panel Mount Jackpost .062" Panel

R4 - Rear Panel Mount Jackpost .093" Panel

K - Jackscrew-Standard Profile

L - Jackscrew-Low Profile

F - Float Mount

B - No hardware (Standard)
.091 dia. hole for sizes 9-51
.120 dia. hole for size 100

A - No hardware
.125 dia. hole for sizes 9-51
.166 dia. hole for size 100

B1 - No hardware
.1475 dia. hole for size 100
(Per MIL-DTL-83513)

Hardware per MIL-DTL-83513/5:
Size 9-25:

M2 - Jackscrew-low profile (Allen Head)

M3 - Jackscrew-standard profile (Allen Head)

M5 - Jackscrew-low profile (Slotted Head)

M6 - Jackscrew-standard profile (Slotted Head)

M7 - Jackpost

**Shell Finish / MOD Codes**
F300 - Stainless Steel Passivated Only

| High-Temp Wires \| Callouts | | | | |
|---|---|---|---|---|
| M22759/87-26-9 | | | | |
| Length | Yellow | White | 10-Color Repeat | System 1 |
| 1 | 030 | R30 | T30 | U30 |
| 2 | 024 | R24 | T24 | U24 |
| 3 | 020 | R20 | T20 | U20 |
| 4 | - | R33 | T33 | U33 |
| 5 | 031 | R31 | T31 | U31 |
| 6 | 019 | R65 | T19 | 072 |
| 8 | 026 | R26 | T26 | U26 |
| 9 | 015 | R15 | T15 | U15 |
| 10 | 029 | R29 | T29 | U29 |
| 12 | 028 | R66 | T28 | 073 |
| 16 | 029 | R39 | T39 | U39 |
| 17 | 036 | R36 | T36 | U36 |
| 18 | 001 | R67 | T01 | 074 |
| 20 | 038 | R38 | T38 | U38 |
| 21 | 055 | R55 | T55 | U55 |
| 24 | 009 | R68 | T09 | 075 |
| 30 | 010 | R10 | T10 | U10 |
| 35 | 018 | R18 | T18 | U18 |
| 36 | 011 | R69 | T11 | 076 |
| 40 | 037 | R37 | T37 | U37 |
| 42 | 012 | R12 | T12 | U12 |
| 48 | 013 | R70 | T13 | 077 |
| 50 | 040 | R40 | T40 | U40 |
| 60 | 014 | R14 | T14 | U14 |
| 72 | 017 | R71 | T17 | 078 |
| 80 | 032 | R32 | T32 | U32 |
| 92 | 022 | R22 | T22 | U22 |
| 96 | 035 | R35 | T35 | U35 |
| 120 | 042 | R42 | T42 | U42 |
| 180 | 043 | R43 | T43 | U43 |

## Jackpost Bushing

### Rear Panel Mount For SIzes 9-69

| Hardware Identifier | Panel Mount Thickness | Kit Part Number |
|---|---|---|
| R1 | 0.032" | 320-9505-004 |
| R2 | 0.047" | 320-9505-005 |
| R3 | 0.062" | 320-9505-006 |
| R4 | 0.093" | 320-9505-007 |

Dimensions shown in ( ) are in mm
Specifications and dimensions subject to change

# Micro-D Metal Shell - .050" Contact Spacing | MIL-DTL-83513

## How to Order | Part Number Nomenclature – Slash Sheets 1-5, 10-33



| M83513/ | 01 | - | H100 | ** | **** |
|---|---|---|---|---|---|

**Series**

MDM - Metal Shell, Liquid Crystal Polymer (LCP)
MDB - Diallyl Phthalate Insulator
MDVB - Polyester Insulator
M83513 - Per MIL-DTL-83513 Micro Specification

**MIL-DTL-83513 Slash Sheet**

01 - Plug, Connector, Solderpot
02 - Receptacle, Connector, Solderpot
03 - Plug, Connector, Crimp Type
04 - Receptacle, Connector, Crimp Typet
} Metal Shell
05 - Hardware Only ⚠1

**Insert Arrangements**

**METAL SHELL**

A - 9 Contact
B - 15 Contact
C - 21 Contact
D - 25 Contact
E - 31 Contact
F - 37 Contact
G - 51 Contact
H - 100 Contact

**Wire Type**

No Number - For Solderpot
01 - 18" long, #26 AWG per MIL-W-22759/11-26-9 (all white)
02 - 36" long, #26 AWG per MIL-W-22759/11-26-9 (all white)
03 - 18" long, #26 AWG per MIL-W-22759/11-26 Color Coded per MIL-STD-681, System 1, 10 colors repeating ⚠6
04 - 36" long, #26 AWG per MIL-W-22759/11-26-Color Coded per MIL-STD-681, System 1, 10 colors repeating ⚠6
05 - .5" long. #25 AWG, type S per QQ-W-343, Gold Plated
06 - 1.0" long, #25 AWG, type S per QQ-W-343, Gold Plated
07 - .5" long, #25 AWG, type S per QQ-W-W-343, Tin Plated
08 - 1.0" long, #25 AWG, type S per QQ-W-343, Tin Plated
09 - 18" long, #26 AWG per MIL-W-22759/33-26-9 (all white) ⚠3
10 - 36" long, #26 AWG per MIL-W-22759/33-26-9 (all white) ⚠3
11 - 18" long, #26 AWG per MIL-W-22759/33-26 Color Coded per MIL-STD-681, System 1, 10 colors repeating ⚠3 ⚠6
12 - 36" long, #26 AWG per MIL-W-22759/33-26 Color Coded per MIL-STD-681, System 1, 10 colors repeating ⚠3 ⚠6
13 - 72" long, #26 AWG per MIL-W-22759/11-26-9 (all white)
14 - 72" long, #26 AWG per MIL-W-22759/11-26 ⚠3 ⚠6
15 - 72" long, #26 AWG per MIL-W-22759/33-26-9 (all white)
16 - 72" long, #26 AWG per MIL-W-22759/33-26 Color Coded per MIL-STD-681, System 1, 10 colors repeating ⚠3 ⚠6

**Shell Finish**

C - for Cadmium/Yellow chromate over nickels
N - A174 - Electroless Nickel A174

NOTE:
1 - For every Mil Spec Part Number, ITT has one corresponding part number shown an example
2 - Tolerance on wire lengths: 18", 36" and 72" long — +1.00"/-0.00" .5" and 1.00" — + .200"/-.000"
⚠3 - For space application, connector shell finish must be "A174" and wire must be per MIL-W-22759/33-26.
4 - Any deviations to these P/N's will result in assignment of a special P/N, consult factory.
⚠6 - Color coding in accordance with MIL-STD-681, System 1, no parenthesis. See pages 86-87 for color code chart.
⚠1 - For mounting hardware to Military Specification (sizes 9 to 100) see page 16.

# Micro-D Metal Shell - .050" Contact Spacing | MIL-DTL-83513

## How to Order | Part Number Nomenclature – Slash Sheets 1-5, 10-33



| M83513/ | 10 | - | A | ** | C | * |
|---|---|---|---|---|---|---|

**Series**
**M83513 - Per MIL-DTL-83513 Micro Specification**
Connector, Electrical, Rectangular
Microminiature, Polarized Shell
PC Board Mounting

**MIL-DTL-83513 Slash Sheet**

| | | |
|---|---|---|
| 10 | - | Connector, Plug, Condensed Board Right Angle (CBR), Sizes 9 – 37 |
| 11 | - | Connector, Plug, CBR, Size 51 |
| 12 | - | Connector, Plug, CBR, Size 100 |
| 13 | - | Connector, Receptacle, CBR, Sizes 9 – 37 |
| 14 | - | Connector, Receptacle, CBR Size 51 |
| 15 | - | Connector, Receptacle, CBR, Size 100 |
| 16 | - | Connector, Plug, Board Right Angle (BR), Sizes 9 – 37 |
| 17 | - | Connector, Plug, BR, Size 51 |
| 18 | - | Connector, Plug, BR, Size 100 |
| 19 | - | Connector, Receptacle, BR, Sizes 9 – 37 |
| 20 | - | Connector, Receptacle, BR Size 51 |
| 21 | - | Connector, Receptacle, BR Size 100 |
| 22 | - | Connector, Plug, Board Straight (BS), Sizes 9 – 37 |
| 23 | - | Connector, Plug, BS, Size 51 |
| 24 | - | Connector, Plug, BS, Size 100 |
| 25 | - | Connector, Receptacle, BS, Sizes 9 – 37 |
| 26 | - | Connector, Receptacle, BS, Size 51 |
| 27 | - | Connector, Receptacle, BS Size 100 |
| 28 | - | Connector, Plug, CBS, Sizes 9 – 37 |
| 29 | - | Connector, Plug, CBS, Size 51 |
| 30 | - | Connector, Plug, CBS Size 100 |
| 31 | - | Connector, Receptacles, CBS 9 – 37 |
| 32 | - | Connector, Receptacles, CBS 51 |
| 33 | - | Connector, Receptacles, CBS 100 |

**Insert Arrangements**
**METAL SHELL**

| | | | | | |
|---|---|---|---|---|---|
| A | - | 9 Contact | E | - | 31 Contact |
| B | - | 15 Contact | F | - | 37 Contact |
| C | - | 21 Contact | G | - | 51 Contact |
| D | - | 25 Contact | H | - | 100 Contact |

**Wire Type**

| | | |
|---|---|---|
| 01 | - | .109" long, #24 AWG solid copper wire per QQ-W-343, Type "S", solder dipped |
| 02 | - | .140" long, #24 AWG solid copper wire per QQ-W-343, Type "S", solder dipped ⚠ |
| 03 | - | .172" long, #24 AWG solid copper wire per QQ-W-343, Type "S", solder dipped |

**Shell Finish**

| | | |
|---|---|---|
| C | - | Cadmium / Yellow chromate over nickel |
| N | - | Electroless Nickel ⚠⚠ |

**HARDWARE**

| | | |
|---|---|---|
| N | - | No jackpost |
| P | - | Jackpost (permanently attached) |
| T | - | Threaded insert |
| W | - | Jackpost and Threaded insert |

NOTE:
1 - For every Mil Spec Part Number, ITT has one corresponding part number
⚠ - Tolerance on wire lengths: 18", 36" and 72" long — +1.00"/-0.00" .5" and 1.00" — + .200"/-.000"
⚠ - For space application, connector shell finish must be "A174" and wire must be per MIL-W-22759/33-26.
4 - Any deviations to these P/N's will result in assignment of a special P/N, consult customer service.

Dimensions shown in ( ) are in mm
Specifications and dimensions subject to change

# Accessories

## Shielded metal backshell

A single piece, machined aluminum shell for ITT Cannon MDM connectors. Cable braid can be fixed to the shell with the band-it strap (supplied with the backshell) to give a shielded termination. Stainless steel mounting hardware, either jackposts or low profile jack screws, comes with the backshell.

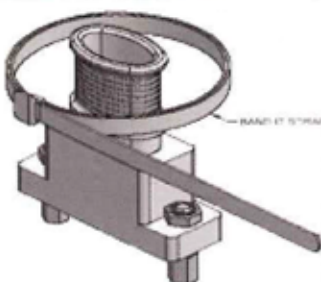

| MATERIALS AND FINISHES | |
|---|---|
| Backshell Material | Aluminum |
| Backshell Finish | Electroless Nickel or Yellow Chromate over Cadmium |
| Hardware Material | Stainless Steel |

MDM-BT - 15 TE - SJS - CAD

**Band Tied Backshell**

**Shell Size**

**Series**
**TE** - Top entry
**AE** - Angles (45°) entry
**SE** - Side entry

**Hardware**
**SJS** - Spring clips and jackscrews
**JP** - Jackposts

**Planting**
**Blank** - Electroless nickel
**CAD** - Yellow chromate over cadmium

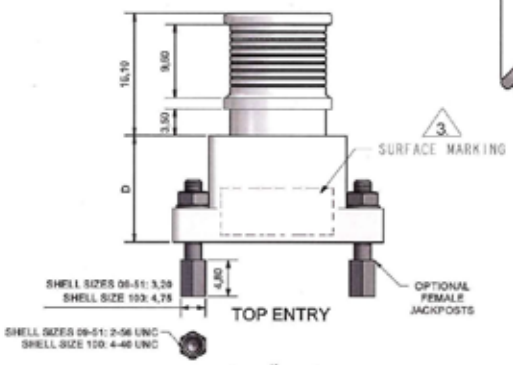


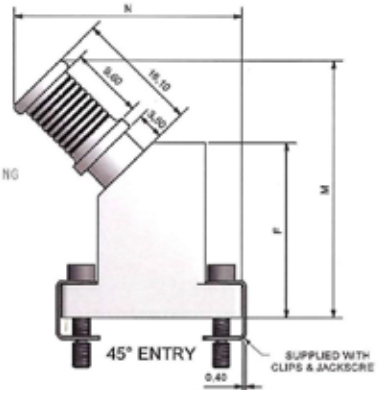


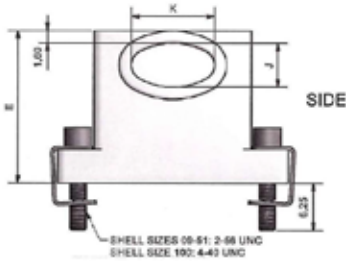


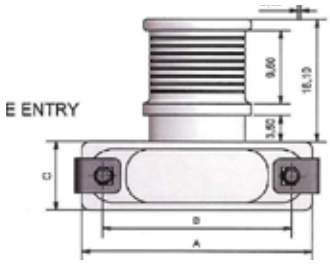


| Shell Size | A | B | C | D | E | F | Styles TE & SE | | Style AE | |
|---|---|---|---|---|---|---|---|---|---|---|
| | | | | | | | J | K | J | K |
| 9 | 0.776 (19.7) | 0.565 (14.4) | 0.354 (9.0) | 0.394 (10.0) | 0.591 (15.0) | 0.827 (21.0) | 0.228 (5.8) | 0.276 (7.0) | 0.189 (4.8) | 0.189 (4.8) |
| 15 | 0.921 (23.4) | 0.715 (18.2) | 0.354 (9.0) | 0.472 (12.0) | 0.650 (16.5) | 0.906 (23.0) | 0.228 (5.8) | 0.425 (10.8) | 0.189 (4.8) | 0.189 (4.8) |
| 21 | 1.075 (27.3) | 0.865 (22.0) | 0.354 (9.0) | 0.551 (14.0) | 0.709 (18.0) | 0.984 (25.0) | 0.228 (5.8) | 0.425 (10.8) | 0.228 (5.8) | 0.276 (7.0) |
| 25 | 1.175 (29.9) | 0.965 (24.5) | 0.354 (9.0) | 0.630 (16.0) | 0.787 (20.0) | 1.063 (27.0) | 0.228 (5.8) | 0.598 (15.2) | 0.228 (5.8) | 0.425 (10.8) |
| 31 | 1.327 (33.7) | 1.115 (28.3) | 0.354 (9.0) | 0.669 (17.0) | 0.827 (21.0) | 1.102 (28.0) | 0.228 (5.8) | 0.598 (15.2) | 0.228 (5.8) | 0.425 (10.8) |
| 37 | 1.476 (37.5) | 1.265 (32.1) | 0.354 (9.0) | 0.709 (18.0) | 0.866 (22.0) | 1.142 (29.0) | 0.228 (5.8) | 0.791 (20.1) | 0.228 (5.8) | 0.598 (15.2) |
| 51 | 1.421 (36.1) | 1.215 (30.9) | 0.394 (10.0) | 0.748 (19.0) | 0.906 (23.0) | 1.181 (30.0) | 0.268 (6.8) | 0.898 (22.8) | 0.268 (6.8) | 0.697 (17.7) |
| 69 | 1.727 (43.71) | 1.515 (38.48) | 0.394 (10.0) | 0.748 (19.0) | 0.906 (23.0) | 1.181 (30.0) | 0.268 (6.8) | 1.140 (28.9) | 0.268 (6.8) | 1.158 (29.4) |
| 100 | 2.165 (55.0) | 1.800 (45.7) | 0.433 (11.0) | 0.827 (21.0) | 0.984 (25.0) | 1.496 (38.0) | 0.307 (7.8) | .024 (26.0) | 0.307 (7.8) | 1.024 (26.0) |

Dimensions shown in ( ) are in mm
Specifications and dimensions subject to change



Our MDMH Hermetic Microminiature Connectors are ideal for applications that require more robust sealing than can be achieved with epoxy resins. The MDMH uses size 24 AWG contacts that are compression glass sealed through a steel shell and into a diallyl pthalate front-end insulator. When mated, an interfacial seal provides environmental protection. We recommend MDMH Hermetic receptacles be soldered to the chassis or container for a completely leak-proof joint. MDMH Hermetic receptacles mate with standard MDM plugs.

## Specifications

**STANDARD MATERIALS & FINISHES**

| | |
|---|---|
| Shell | Mild steel, tin-lead plated |
| Insulator | Glass filled diallyl phthalate per MIL-M-14. Type SDGF |
| Contacts | Copper alloy, gold plated sockets on mild steel gold plated pins.<br>Solder pots - mild steel gold plated |
| Hermetic seal | Compression glass |
| Leak rate | 1 micron cubic ft/hr max (1.04 x 10-5 cc/sec at 1 ATM pressure differential) |
| **ELECTRICAL DATA** | |
| No. of contacts | 9 to 100 |
| Dielectric withstanding voltage | 150 VAC |
| Insulation resistance | 5000 Mohm minimum |
| Wire size | #26 through #30 AWG |
| Contact termination | Solder pot |
| **MECHANICAL FEATURES** | |
| Size or length | 8 sizes |
| Service class | Hermetically sealed |
| Coupling | Friction/jacks |
| Polarization | Keystone shaped shells |
| Contact spacing | .050 (1.27) centers |
| Shell style | Receptacle, solder mount |

## How to Order

MDMH - 51 S S

**Hermetic Micro D Receptacle Series**

**Contact Arrangement**
9, 15, 21, 25, 31, 37, 51, 100

**Socket Contacts (only)**

**Termination Type**

Dimensions shown in ( ) are in mm
Specifications and dimensions subject to change

## Contact Arrangements

Face vew of socket insert - use reverse order for wiring side.

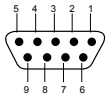


**9 Contacts**

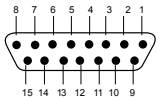


**15 Contacts**

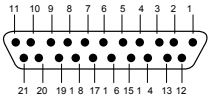


**21 Contacts**

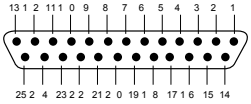


**25 Contacts**

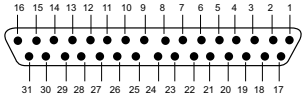


**31 Contacts**

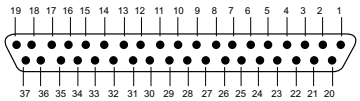


**37 Contacts**

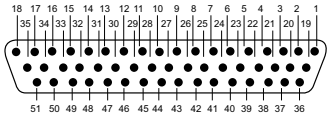


**51 Contacts**

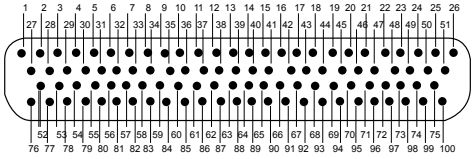


**100 Contacts**

Contact identification numbers are for reference only and do not appear on insulator or connector body.

## Shell Dimensions

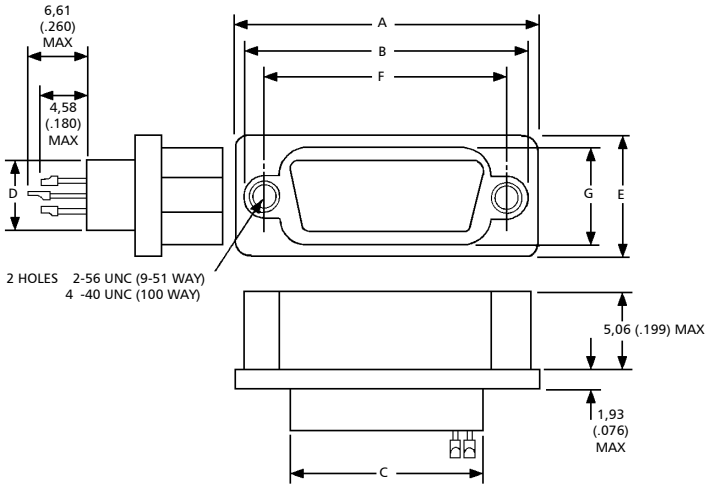


| Part Number By Shell Size | A Max. | B Max. | C Max. | D Max. | E Max. | F ±.005 (0,13) | G Max. |
|---|---|---|---|---|---|---|---|
| MDMH-9S | .885 (22,48) | .738 (18,74) | .400 (10,16) | .270 (6,86) | .430 (10,92) | .565 (14,35) | .261 (6,63) |
| MDMH-15S | 1.035 (26,29) | .888 (22,55) | .550 (13,97) | .270 (6,86) | .430 (10,92) | .715 (18,16) | .261 (6,63) |
| MDMH-21S | 1.185 (30,10) | 1.038 (26,36) | .770 (17,78 | .270 (6,86) | .430 (10,92) | .865 (21,97) | .261 (6,63) |
| MDMH-25S | 1.285 (32,64) | 1.137 (28,87) | .800 (20,32) | .270 (6,86) | .430 (10,92) | .965 (24,51) | .261 (6,63) |
| MDMH-31S | 1.435 (36,45) | 1.288 (32,72) | .950 (24,13) | .270 (6,86) | .430 (10,92) | 1.115 (28,32) | .261 (6,63) |
| MDMH-37S | 1.585 (40,26) | 1.438 (36,53) | 1.100 (27,94) | .270 (6,86) | .430 (10,92) | 1.265 (32,13) | .261 (6,63) |
| MDMH-51S | 1.535 (38,99) | 1.388 (35,26 | 1.050 (26,67) | .310 (8,00) | .473 (12,01) | 1.215 (30,86) | .315 (8,00) |
| MDMH-100S | 2.275 (57,78) | 2.078 (52,78) | 1.455 (36,97) | .365 (9,27) | .522 (13,26) | 1.800 (45,72) | .410 (10,41) |



Our TMDM Filtered Microminiature Connectors feature transverse monolith filters for noise reduction and EMI, RFI and EMP shielding. These high performance connectors feature a ruggedized, one-piece aluminum shell and are ideally suited for commercial aerospace, military avionics and military equipment applications. The TMDM Filtered Micro is designed with Cannon's own TwistPin Contact System and is environmentally sealed. The TMDM receptacle accommodates from 8 to 37 sizes, 24 AWG socket contacts on 1.27 (.050) centers and mates with standard MDM Microminiature Connector plugs.

## Specifications

**STANDARD MATERIALS & FINISHES**

| | |
|---|---|
| Shell | Aluminum alloy per QQ-A-200/8 with electroless nickel finish per QQ-N-290 |
| Insulator | Glass filled diallyl phthalate per MIL-M-14. Type SDGF |
| Contact, socket | Copper alloy, 50 microinch gold per MIL-G-45204, Type II, Class I |
| Interfacial seal | Silicone base rubber |
| **ELECTRICAL DATA** | |
| No. of contacts | 9 to 37 |
| Dielectric withstanding voltage | 300 VAC |
| Insulation resistance | 5000 Mohm at 100 VDC |
| Voltage rating (working) | 100 VDC |
| Current rating | 3 amps max. |
| Maximum capacitance | 250, 500, 1000, 2000 picofarads |
| Filter type | C |
| **MECHANICAL FEATURES** | |
| Size or length | 6 sizes |
| Coupling | Friction/jackscrews |
| Polarization | Keystone shaped shell |
| Contact spacing | .050 (1.27) centers |
| Shell style | Single piece receptacle |

## How to Order

| TMDM | - | C1 | 15 | S | H | 001 | B- | * |
|---|---|---|---|---|---|---|---|---|

**Series**
**Filter type**
**Number of contacts**
**Contact Style**
**Termination code ***
**Termination**
**Mounting code**
**Modification code**

**Series**
Filter TMDM - Micro "D" - Metal housing

**Filter type**
"C" capacitor type
C1 - 150 - 250 pF capacitance
C2 - 300 - 500 pF capacitance
C3 - 700 - 1000 pF capacitance
C4 - 1300 - 2000 pF capacitance

**Number of contacts**
9, 15, 21, 25, 31, 37 only

* No number - Electroless Nickel A172
- Gold over Nickel

**Contact style**
S - socket (receptacle)
P - Pin (plug)

**Termination code***
H - harness, insulated solid or stranded wire
L - lead, solid uninsulated wire

**Termination**
Consult standard wire termination code for lead material and lead length

**Mounting code**
A - Flange mounting, Ø.125 (3,18) mounting holes
B - Flange mounting, Ø.092 (2,34) mounting holes
L - Low profile (slotted head)
M2 - Allen head jackscrew assembly, low profile
M3 - Allen head jackscrew assembly, high profile
M5 - Slot head jackscrew assembly, low profile
M6 - Slot head jackscrew assembly, high profile
M7 - Jacknut assembly
P - Jackpost

**Modification code**
Shell finish MOD. Codes.*
To be assigned as required

Dimensions shown in ( ) are in mm
Specifications and dimensions subject to change

## Guaranteed Minimum Attenuation

| Filter designation | Capacitance range (pF) | Minimum Insertion Loss-decibels | | | | | | | |
|---|---|---|---|---|---|---|---|---|---|
| | | 10 MHz | 15 MHz | 30 MHz | 50 MHz | 100 MHz | 200 MHz | 500 MHz | 1 GHz |
| C1 | 150 - 250 | | | | 4 | 6 | 15 | 20 | 35 |
| C2 | 300 - 500 | | | 3 | 6 | 12 | 18 | 25 | 40 |
| C3 | 700 - 1000 | | 3 | 7 | 13 | 17 | 25 | 38 | 48 |
| C4 | 1300 - 2000 | 5 | 8 | 13 | 18 | 23 | 30 | 40 | 50 |

## Standard Wire Termination Codes

Cannon Modification Codes – (Not Mil Spec)
The following termination codes are listed for your information. For additional codes please refer to Appendix on pp. 88-91. All wire lengths are minimum.

Harness Type (H) #26 AWG per
MIL-W-16878/4 Type E Teflon, stranded

| Length | | All Yellow | Color Coded |
|---|---|---|---|
| 3 | (76.2) | H020 | H027 |
| 6 | (152.4) | H019 | H016 |
| 8 | (203.2) | H026 | H034 |
| 10 | (254.0) | H029 | H025 |
| 12 | (304.8) | H028 | H002 |
| 18 | (457.2) | H001 | H003 |
| 20 | (508.0) | H038 | H023 |
| 24 | (509.6) | H009 | H004 |
| 30 | (762.0) | H010 | H005 |
| 36 | (914.4) | H011 | H006 |
| 48 | (1219.2) | H013 | H048 |
| 72 | (1828.8) | H017 | H046 |
| 120 | (1828.8) | H042 | H041 |

Solid Uninsulated Type (L)
#25 AWG gold plated copper.

| Code | Length | |
|---|---|---|
| L61 | .125 | (.18) |
| L56 | .150 | (3.81) |
| L57 | .190 | (4.83) |
| L39 | .250 | (5.35) |
| L58 | .375 | (9.52) |
| L1 | .500 | (12.70) |
| L14 | .750 | (19.05) |
| L2 | 1.000 | (25.40) |
| L7 | 1.500 | (38.10) |
| L6 | 2.000 | (50.80) |
| L6 | 2.500 | (63.50) |
| L10 | 3.000 | (76.20) |

## Shell Dimensions

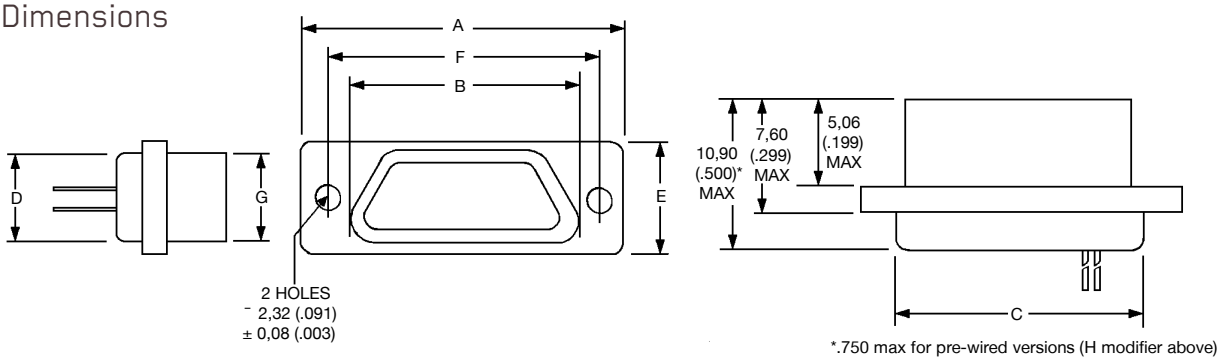


*.750 max for pre-wired versions (H modifier above)

| Part Number By Shell Size | A Max. | B Max. | C Max. | D Max. | E Max. | F ±0,13 (.005) | G Max. |
|---|---|---|---|---|---|---|---|
| MDMT-9S* | .785 (19,94) | .400 (10,16) | .400 (10,16) | .270 (6,86) | .308 (7,83) | .565 (14,36) | .251 (6,38) |
| MDMT-15S* | .935 (23,75) | .550 (13,97) | .550 (13,97) | .270 (6,86) | .308 (7,83) | .715 (18,17) | .251 (6,38) |
| MDMT-21S* | 1.085 (27,60) | .700 (17,78) | .770 (17,78 | .270 (6,86) | .308 (7,83) | .865 (21,98) | .251 (6,38) |
| MDMT-25S* | 1.185 (30,10) | .800 (20,32) | .800 (20,32) | .270 (6,86) | .308 (7,83) | .965 (24,52) | .251 (6,38) |
| MDMT-31S* | 1.335 (33,90) | .950 (24,13) | .950 (24,13) | .270 (6,86) | .308 (7,83) | 1.115 (28,30) | .251 (6,38) |
| MDMT-37S* | 1.485 (37,70) | 1.100 (28,00) | 1.100 (28,00) | .270 (6,86) | .308 (7,83) | 1.265 (32,20) | .251 (6,38) |

## Typical Filter Performance

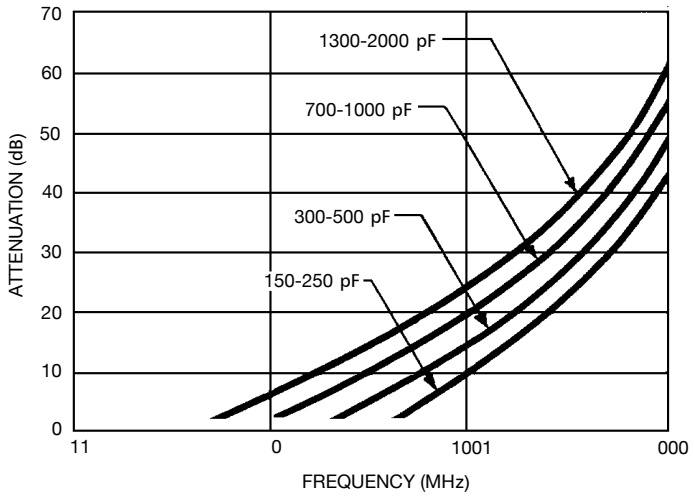






# Micro-D Plastic Shell - .050" Contact Spacing MD**



Cannon MD** Microminiature Solutions are used in applications requiring highly reliable, extremely small and lightweight interconnects. They are available in two insulator materials, two mounting variations, seven shell sizes accommodating from 9 to 51 contacts and a special arrangement of five micro contacts and two coaxial. The insulator materials give the Cannon MD** connector wide versatility in most applications. They can also terminate a wide variety of stranded or solid wire directly to Micro-D contacts, which is often desirable in high density arrangements. MD** Connectors can also be custom harnessed to meet any customer requirement.

## Specifications

**STANDARD MATERIALS & FINISHES**

| | |
|---|---|
| Shell/Insulator (One Piece) | MD/MDB: Glass-filled thermoset plastic<br>MDV/MDVB: Thermoplastic |
| Contacts | - Copper alloy, gold plate |

**ELECTRICAL DATA**

| | |
|---|---|
| No. of contacts | - 9 to 51: (1 arrangement of 5 contacts and 2 coaxial - for screw mount only) |
| Coaxial Cable | - RG-178/U (Not available for MD clip mount) |
| Wire Size | - #24 thru #32 AWG |
| Contact Termination | - Multi-indent crimp |

**MECHANICAL FEATURES**

| | |
|---|---|
| Size or length | - 7 sizes |
| Coupling | - Friction/jackscrews |
| Polarization | - Keystone-shaped shells |
| Contact spacing Centres | - .050 (1.27mm) |
| Shell style | - Plug and receptacle |

Consult factory for availability

# Micro-D Plastic Shell - .050" Contact Spacing

MD**

## How to Order (PCB ordering information page 22)

| R | MD** | 1- | 9 | P | H | 001 | P |
|---|---|---|---|---|---|---|---|

**RoHS Compliant**
**Series-Insulator Style-Material**
**Contact Spacing**
**Contact Style**
**Contact Arrangement**
**Contact Type**
**Termination Type**
**Locking Harware Code**

**Series-Insulator Style-Material**
MDB - Screw mounting-
Diallyl phthalate

MDVB - Screw mounting-Polyester

**Contact Spacing**
1 - .050 (1.27) centers

**Contact Arrangements**
9-15-21-25-31-37-51. See page 13.

**Contact Type**
P - Pin
S - Socket

**Termination Type**
H - Insulated solid or stranded wire
L - Uninsulated solid wire
S - Solder pot to accept #26 AWG max. harness wire

**Termination Code**
See page 83-85 for additional codes
(H) 001 - 18", 7/34 strand, #26 AWG, MIL-W-16878/4, Type E Teflon, Yellow.
(H) 003 - 18", 7/34 strand, #26 AWG, MIL-W-16878/4, Type E Teflon, color coded to MIL-STD-681 System I.
(L) 1 - 1/2" uninsulated solid #25 AWG gold plated copper.
(L) 2 - 1"uninsulated solid #25 AWG gold plated copper.

**Locking Hardware (Screw Mounting Only)**
P - Jackpost
K - Jackscrew-standard
L - Jackscrew-low profile
F - Float mount
M - Military specification hardware, see page 17.

No designator - No hardware - standard mounting .091 (2.31) hole diameter

RoHS COMPLIANT PART NUMBERS

Dimensions shown in ( ) are in mm
Specifications and dimensions subject to change

# Micro-D Plastic Shell - .050" Contact Spacing MDB/MDVB

## With Screw Mounting Holes (Conforms to MIL-DTL-83513)



**MDB** Glass-filled Diallyl Phthalate Plastic Insulator

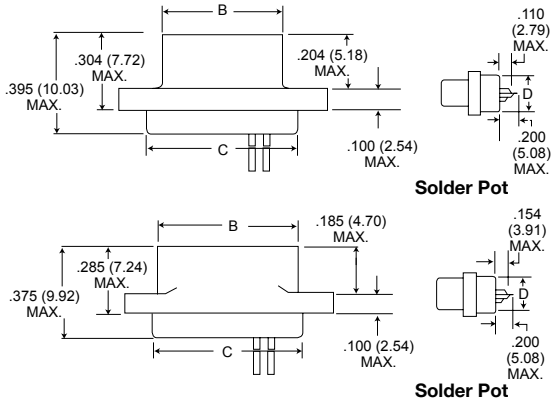


**MDVB** Glass-filled Polyester Plastic Insulator

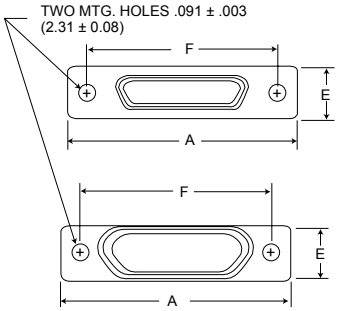


| Part Number by Shell Size | | A Max. | B Max. | C Max. | D Max. | E Max. | F ±0,13 (.005) | Avg. Weight*** ±5% (oz.) ±5% (gm.) |
|---|---|---|---|---|---|---|---|---|
| MDB1-9P** | MDVB1-9P** | .788 (20.02) | .292 (7.42) | .408 (10.36) | .173 (4.39) | .218 (5.54) | .565 (14.36) | .026 (0.73) |
| MDB1-9S** | MDVB1-9S** | .788 (20.02) | .380 (9.65) | .408 (10.36) | .173 (4.39) | .218 (5.54) | .565 (14.36) | .025 (0.70) |
| MDB1-15P** | MDVB1-15P** | .938 (23.82) | .442 (11.23) | .588 (14.17) | .173 (4.39) | .218 (5.54) | .715 (18.16) | .038 (1.10) |
| MDB1-15S** | MDVB1-15S** | .938 (23.82) | .530 (13.46) | .588 (14.17) | .173 (4.39) | .218 (5.54) | .715 (18.16) | .035 (1.00) |
| MDB1-21P** | MDVB1-21P** | 1.088 (27.64) | .592 (15.04) | .708 (17.98) | .173 (4.39) | .218 (5.54) | .865 (21.97) | .053 (1.50) |
| MDB1-21S** | MDVB1-21S** | 1.088 (27.64) | .680 (17.27) | .708 (17.98) | .173 (4.39) | .218 (5.54) | .865 (21.97) | .050 (1.40) |
| MDB1-25P** | MDVB1-25P** | 1.188 (30.18) | .692 (17.58) | .808 (20.56) | .173 (4.39) | .218 (5.54) | .965 (24.51) | .063 (1.80) |
| MDB1-25S** | MDVB1-25S** | 1.188 (30.18) | .780 (19.81) | .808 (20.56) | .173 (4.39) | .218 (5.54) | .965 (24.51) | .056 (1.60) |
| MDB1-31P** | MDVB1-31P** | 1.338 (33.98) | .842 (21.39) | .958 (24.33) | .173 (4.39) | .218 (5.54) | 1.115 (28.32) | .080 (2.30) |
| MDB1-31S** | MDVB1-31S** | 1.338 (33.98) | .930 (23.62) | .958 (24.33) | .173 (4.39) | .218 (5.54) | 1.115 (28.32) | .073 (2.10) |
| MDB1-37P** | MDVB1-37P** | 1.488 (37.80) | .992 (25.20) | 1.108 (28.14) | .173 (4.39) | .218 (5.54) | 1.265 (32.13) | .086 (2.45) |
| MDB1-37S** | MDVB1-37S** | 1.488 (37.80) | 1.080 (27.43) | 1.108 (28.14) | .173 (4.39) | .218 (5.54) | 1.265 (32.13) | .076 (2.15) |
| MDB1-51P** | MDVB1-51P** | 1.438 (36.52) | .942 (23.93) | 1.058 (26.87) | .220 (5.59) | .260 (6.60) | 1.215 (30.86) | .109 (3.10) |
| MDB1-51S** | MDVB1-51S** | 1.438 (36.52) | 1.030 (26.16) | 1.058 (26.87) | .220 (5.59) | .260 (6.60) | 1.215 (30.86) | .093 (2.64) |

**Add lead type and length, see Part Number Explanation.
***Weight given is with 1/2", uninsulated solid #25 AWG gold plated copper pigtails.

* For Standard Wire Termination codes refer to the wire pp. 89-91.

# Micro-D Plastic Shell - .050" Contact Spacing MD*D-PCB



Cannon's MD*D-PCB Microminiature Connectors are designed with standard, all-plastic shells for use with flex circuitry, printed circuit and multi-layer boards. They are easily mounted and soldered, and offer high density and high reliability in board-to-board and board-to-cable applications. MD*D-PCB connectors are extremely small, lightweight and ruggedized for exceptional performance in the harshest environments. They are available in seven shell sizes, with 9 to 51 contacts in the popular 90° narrow profile PCB termination and a variety of tail lengths for varying board thickness. Jackpost mounting is also available for use with locking hardware.

## How to Order

| R | MD*B | - | 37 | S | CBR | * | L39 | - | *** |
|---|---|---|---|---|---|---|---|---|---|

**RoHS Compliant**
**Series**
**Contact Arrangement**
**Contact Type**
**Termination Type**
**Hardware**
**Termination Tail Length**
**Modification Codes (Consult Factory)**

**Connector Series**
MDVB, MDB

**Connector Arrangements**
9-15-21-25-31-51

**Contact Type**
**P** - Pin
**S** - Socket

**Termination Type**
**CBR** - 90° Narrow Profile PCB Terminations

**Hardware**
**P** - Jackpost
**M7** - Jackposts, M635135-07
**No Letter** - Less Hardware

**Termination Tail Length Codes**
**None** - .109 (2.77) ± 0.15 (0.38) Standard
**L61** - .125 (3.18)
**L66** - .150 (3.81)
**L57** - .190 (4.83)
**L39** - .250 (6.35)
**L58** - .375 (9.52)

RoHS COMPLIANT PART NUMBERS

Dimensions shown in ( ) are in mm
Specifications and dimensions subject to change

# Micro-D Plastic Shell - .050" Contact Spacing MD*B-PCB

## CBR Series (90° Mounting Narrow Profile)

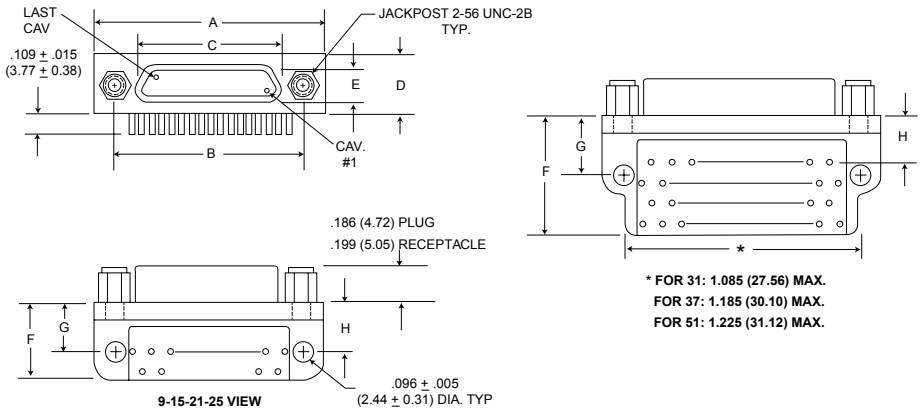


PCB Termination Arrangements (Viewed from bottom of connector, on PCB solder side.)

Indentification number shown for plug connector, use reverse order for socket connector.

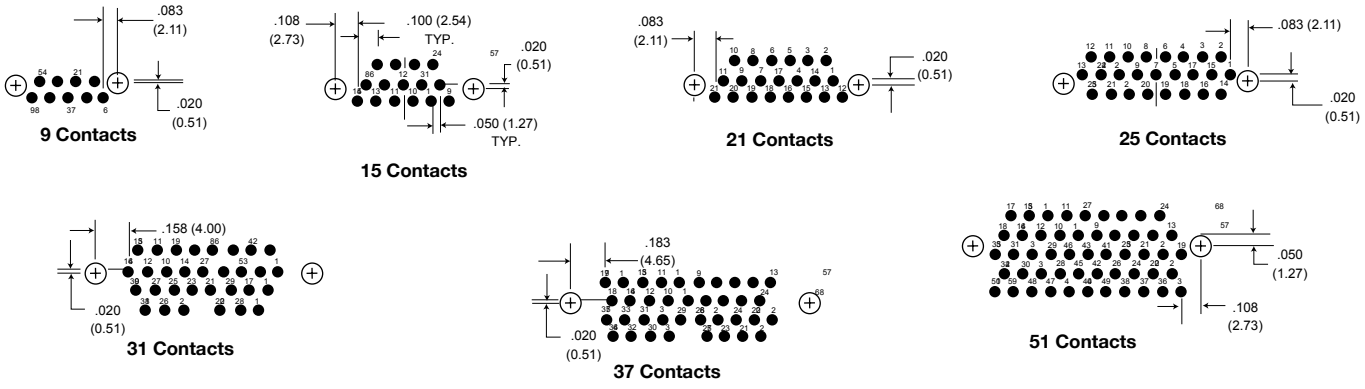


All Termination Configurations .100 (2.54) x .100 (2.54) Grid Pattern, Offset .050 (1.27)

| Part Number By Shell Size | A Max. | B ± .005 (0.13) | C Max. | D Max. | E Max. | F Max. | G ± .010 (0.25) | H ± .010 (0.25) |
|---|---|---|---|---|---|---|---|---|
| MD*B-9PCBR* | .788 (20.01) | .565 (14.35) | .292 (7.42) | .218 (5.54) | .134 (3.40) | .420 (10.67) | .250 (6.35) | .230 (5.84) |
| MD*B-9SCBR* | .788 (20.01) | .565 (14.35) | .375 (9.52) | .218 (5.54) | .218 (5.54) | .420 (10.67) | .250 (6.35) | .230 (5.84) |
| MD*B-15PCBR* | .938 (23.82) | .715 (18.16) | .442 (11.23) | .218 (5.54) | .134 (3.40) | .420 (10.67) | .250 (6.35) | .130 (3.30) |
| MD*B-15SCBR* | .938 (23.82) | .715 (18.16) | .525 (13.34) | .218 (5.54) | .218 (5.54) | .420 (10.67) | .250 (6.35) | .130 (3.30) |
| MD*B-21PCBR* | 1.088 (27.63) | .865 (21.97) | .592 (15.04) | .218 (5.54) | .134 (3.40) | .420 (10.67) | .250 (6.35) | .130 (3.30) |
| MD*B-21SCBR* | 1.088 (27.63) | .865 (21.97) | .675 (17.14) | .218 (5.54) | .218 (5.54) | .420 (10.67) | .250 (6.35) | .130 (3.30) |
| MD*B-25PCBR* | 1.188 (30.17) | .965 (24.51) | .692 (17.58) | .218 (5.54) | .134 (3.40) | .420 (10.67) | .250 (6.35) | .130 (3.30) |
| MD*B-25SCBR* | 1.188 (30.17) | .965 (24.51) | .775 (19.68) | .218 (5.54) | .218 (5.54) | .420 (10.67) | .250 (6.35) | .130 (3.30) |
| MD*B-31PCBR* | 1.338 (33.98) | 1.115 (28.32) | .842 (21.39) | .218 (5.54) | .134 (3.40) | .420 (10.67) | .250 (6.35) | .130 (3.30) |
| MD*B-31SCBR* | 1.338 (33.98) | 1.115 (28.32) | .925 (23.50) | .218 (5.54) | .218 (5.54) | .420 (10.67) | .250 (6.35) | .130 (3.30) |
| MD*B-37PCBR* | 1.488 (37.79) | 1.265 (32.13) | .994 (25.25) | .218 (5.54) | .134 (3.40) | .520 (13.21) | .250 (6.35) | .130 (3.30) |
| MD*B-37SCBR | 1.488 (37.79) | 1.265 (32.13) | 1.075 (27.30) | .218 (5.54) | .218 (5.54) | .520 (13.21) | .250 (6.35) | .130 (3.30) |
| MD*B-51PCBR* | 1.438 (36.52) | 1.215 (30.86) | .942 (23.93) | .258 (6.55) | .177 (4.50) | .550 (13.97) | .300 (7.62) | .150 (3.81) |
| MD*B-51SCBR | 1.438 (36.52) | 1.215 (30.86) | 1.026 (26.06) | .258 (6.55) | .258 (6.55) | .550 (13.97) | .300 (7.62) | .150 (3.81) |

* For jackpost locking add letter "P" or "M7".

NOTE: Standard lead termination is #24 AWG, solid copper, solder or tin dipped.

## MDB Coaxial Series with Screw Mounting Holes

Cannon MDB Coaxial Microminiature Connectors feature two coaxial and five MicroPin /Micro-Socket contacts. Crimp-type coaxial contacts accommodate RG-178/U cables. A plastic insertion/extraction tool is supplied, with each connector assembly having a removable coaxial assembly.

## How to Order - MDB Coaxial

| R | MDB | 1 | -7 | C2 | * | S | H | ** | * | K |
|---|---|---|---|---|---|---|---|---|---|---|

**RoHS Compliant**
**Series**
**Signal Contact Spacing**
**Total Contact Cavities**
**Number of Coaxials**
**Coaxial Type**
**Signal Contact Type**
**Signal Contact Lead Type**
**Signal Contact Lead Length**
**Modification**
**Hardware**

**Series**
Micro-D Coaxial

**Signal Contact Spacing**
1 - .050 (1.27) centers

**Total Contact Cavities** 7

**Number of Coaxials** 2

**Coaxial Type**
No Letter - Coaxial assembly installed and non removable
RO - Coaxial assembly ordered separately
RA - Coaxial shipped assembled but uninstalled

**Signal Contact Type**
P - Pin
S - Socket

**Signal Contact Lead Type**
L - Uninsulated, solid wire
H - Insulated, solid or stranded
S - Solder pot*

**Signal Contact Lead Length**
See Standard Wire Termination Code on page 83-85. Coaxial cable will be RG-178U unless otherwise specified; length will be same as wire modification.

**Modification**
Consult customer service

**Hardware**
No letter - No hardware
standard mounting. 091 (2.31) hole diameter
F - Float
K - Jackscrew (standard)
L - Jackscrew (low profile)
P - Jackpost

* Not available with removal be coax cable type connectors RO and RA.

RoHS COMPLIANT PART NUMBERS

## How to Order - Coaxial Cable Assemblies

RoHS COMPLIANT PART NUMBERS

| R | MD | CC | S | * | *** |
|---|---|---|---|---|---|

**RoHS Compliant**
**Series**
**Coaxial Cable**
**Contact**
**Coaxial Cable Type**
**Coaxial Cable Length**

**Series**
MD

**Coaxial Cable**
CC

**Signal Contact Type**
P - Pin (used with socket side connection)
S - Socket (used with pin type connection

**Coaxial Cable Type**
1 - RG178/U

**Coaxial Cable Length**
See Standard Wire Termination Codes on page 37. Coaxial cable will be RG-178U unless otherwise specified; length will be the same as wire modfication.

Dimensions shown in ( ) are in mm
Specifications and dimensions subject to change

## Dimension - MDB Coaxial Series

(See page 12 for layouts)

**Plug**

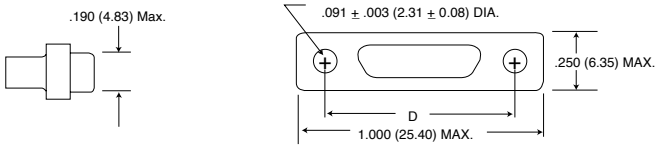


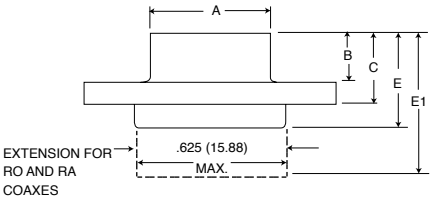


**Receptacle**

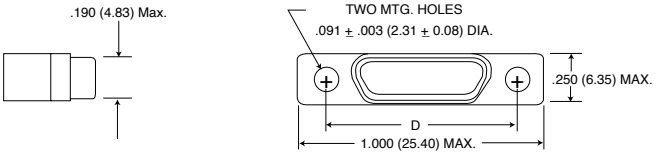


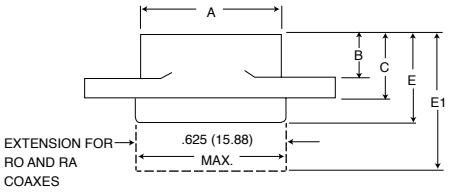


| Part Number By Shell Size | A Max. | B Max. | C Max. | D +_ .005 (0.13) | E Max. | E1 Max. | Avg. Weight** (oz) +_ 5% (gm.) +_ 5% |
|---|---|---|---|---|---|---|---|
| MDB1-7C2P* | .510 (12.95) | .204 (5.18) | .298 (7.57) | .782 (19.86) | .395 (10.03) | .510 (12.95) | .290 (8.30) |
| MDB1-7C2S* | .602 (15.29) | .185 (4.70) | .279 (7.09) | .782 (19.86) | .375 (9.52) | .540 (13.72) | .273 (7.80) |

* Add lead type and length, see Part Number Explanation.
** Weight given is with 7 inch (177.80) insulated leads, #26 AWG silver plated copper pigtails and RG178/U coaxials.

# Micro-D Plastic Shell - .050" Contact Spacing

## Mounting Hardware Views (Sizes 9-51) - Front Panel Mounting

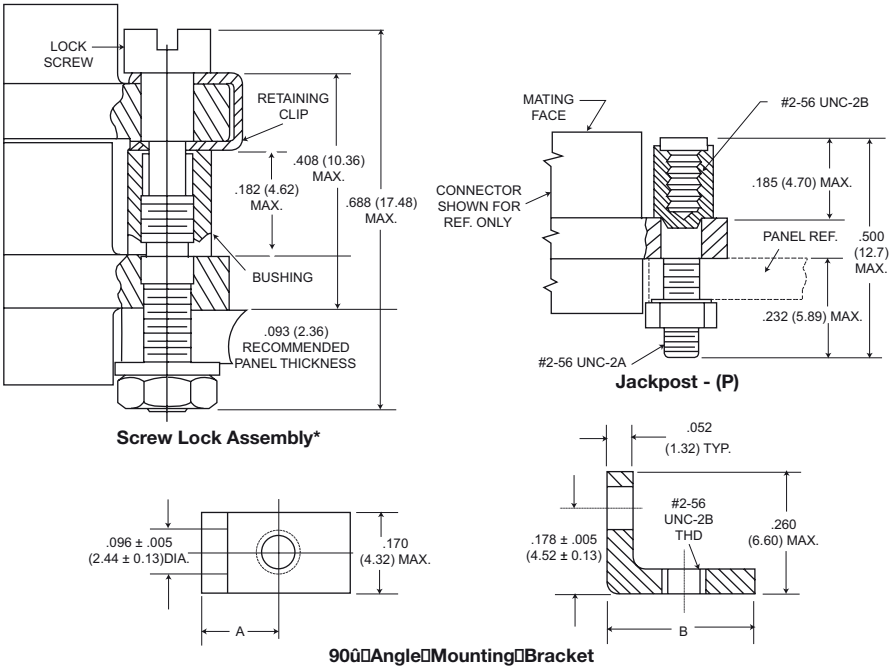


**Screw Lock Assembly***

**Jackpost - (P)**

**90û Angle Mounting Bracket**

*NOTE: Torque value is 4.0 in/lbs max.

| Description | Part Number | A +/-.005 (0.13) | B Max. |
|---|---|---|---|
| Screw Lock Assembly Jackpost Kit | 322-9500-000<br>320-9505-000 | | |
| Mounting Bracket, 90° Angle- MD*1 for 9 thru 37 Shell Sizes | 015-9516-000 | .100 (2.54) | .215 (5.46) |
| MD*1 for 51 Shell Size | 015-9516-000 | .122 (3.10) | .257 (6.53) |

NOTES: Screw lock assembly (322-9500-000) can be used for front mounting. Jackpost kit (320-9505-000) consists of 2 assemblies, shipped unassembled.

This hardware is factory installed.

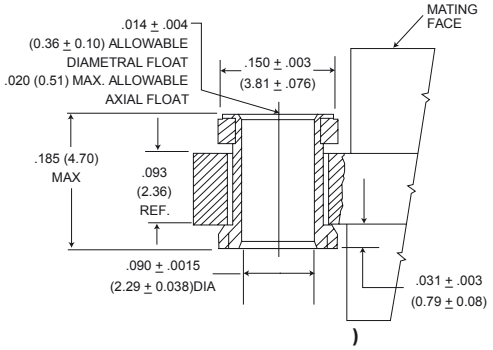


**Float Mount - (F )**

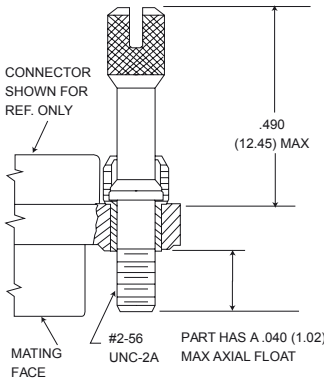


**Jackscrew - (K) Standard**

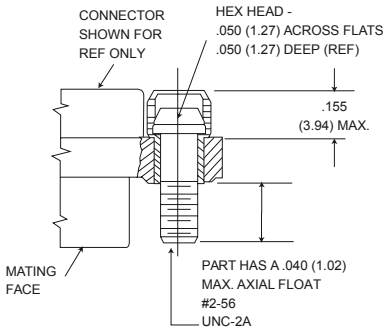


**Jackscrew - (L) Low Profile**

Shown here is a cutaway view of the float mount for the MD connector. The basic shell dimensions are the same for the float mount and the screw mounting hole configurations. View shown is for standard float mount front panel mounting. Reverse mounting is available on request.

* NOTE: Torque values are as follows:
Low Profile Jackscrew (L)-2.5 in/lbs
Standard Jackscrew (K)-2.5 in/lbs

Dimensions shown in ( ) are in mm
Specifications and dimensions subject to change

# Micro-D Plastic Shell - .050" Contact Spacing

## Mounting Hardware to Military Specification (Sizes 9 - 51) PER MIL-DTL-83513/5

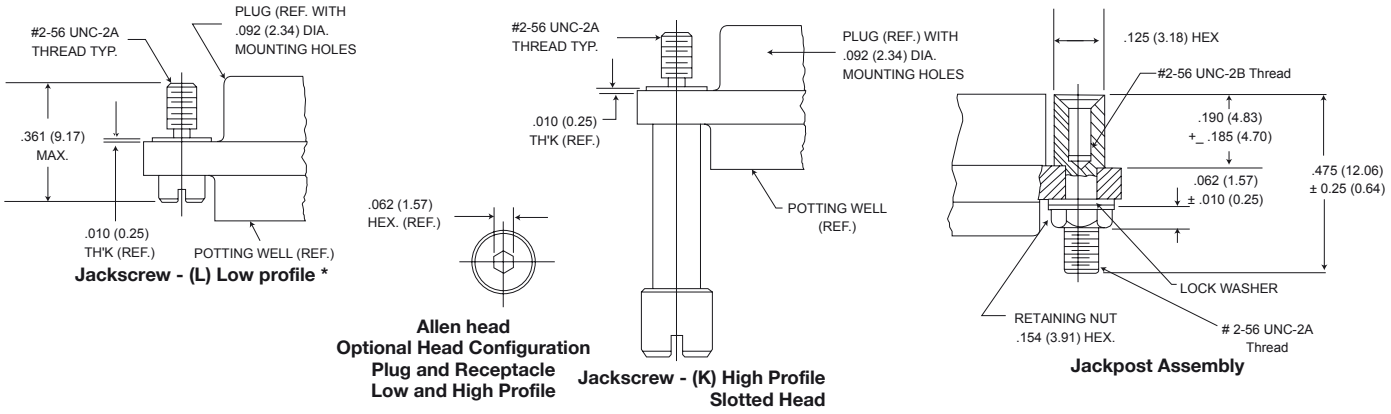


| Description | M83513/5 | Mode Code | Part Number |
|---|---|---|---|
| Slotted Head Jackscrew Assy Low Profile | -05 | M5 | 320-9508-025 |
| Slotted Head Jackscrew Assy High Profile | -06 | M6 | 320-9508-027 |
| Allen Head Jackscrew Assy Low Profile | -02 | M2 | 320-9508-026 |
| Allen Head Jackscrew Assy High Profile | -03 | M3 | 320-9508-028 |
| Jackpost Assy | -07 | M7 | 320-9505-033 |

## Jackpost Bushing (For Rear Panel Mounting)

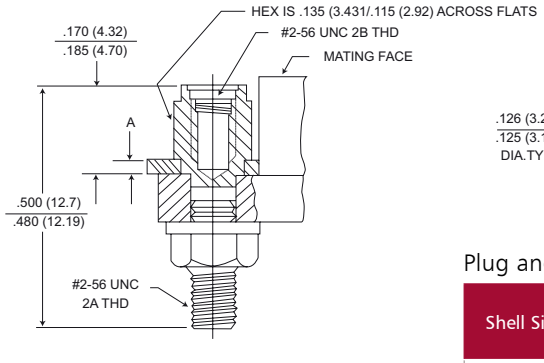


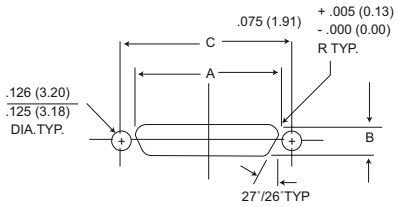


| Panel Thickness | A Dim. | Jackpost Kit Number* |
|---|---|---|
| 3/32 (2.4) | .092/.087 (2.34/2.21) | 320-9505-007 |
| 1/16 (1.6) | .061/.056 (2.34/1.42) | 320-9505-006 |
| 3/64 (1.2) | .047/.042 (1.19/1.07) | 320-9505-005 |
| 1/32 (0.8) | .030/.025 (0.76/0.64) | 320-9505-004 |

*2 Jackposts, 2 nuts, 2 washers.
NOTE: Torque value for jackpost 2.5 in/lbs

### Plug and Receptacle Dimensions

| Shell Size | A +.004 (0.10) -.000 (0.00) | B +.004 (0.10) -.000 (0.00 | C +.005 (0.13) |
|---|---|---|---|
| 9 | .379 ( 9.63) | .219 (5.56) | .565 (14.35) |
| 15 | .529 (13.44) | .219 (5.56) | .715 (18.16) |
| 21 | .679 (17.25) | .219 (5.56) | .865 (21.97) |
| 25 | .779 (19.79) | .219 (5.56) | .965 (24.51) |
| 31 | .929 (23.60) | .219 (5.56) | 1.115 (28.32) |
| 37 | 1.079 (27.41) | .219 (5.56) | 1.265 (32.13) |
| 51 | 1.029 (26.14) | .261 (6.63) | 1.215 (30.86) |

## Jackpost Bushing (For Rear Panel Mounting)

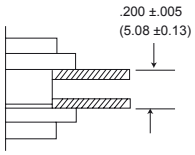


**Plug and Receptacle Rear Mounted**

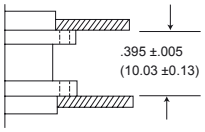


**Plug and Receptacle Front Mounted**

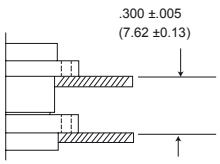


**Plug Front Mounted Receptacle Rear Mounted**

ITT

Dimensions shown in ( ) are in mm
Specifications and dimensions subject to change

# Micro-D Plastic Shell - .050" Contact Spacing

## Panel Cutouts

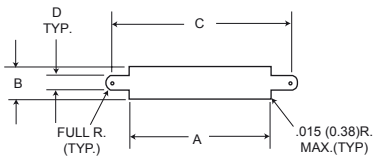


**Figure 1**
**Front Mounting**

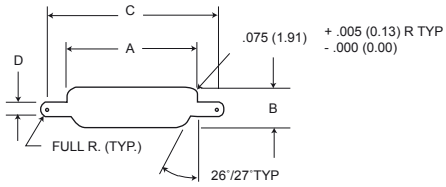


**Figure 2**
**Rear Mounting**

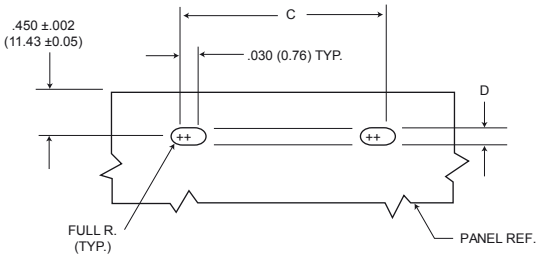


**Figure 3**
**Edgeboard Mounting**

| Size | Cutout Figure | A + .004 (0.10) - .000 (0.00) | B + .004 (0.10) - .000 (0.00) | C + .005 (0.13) - .000 (0.00) | D + .005 (0.13) - .000 (0.00) |
|---|---|---|---|---|---|
| 9 | 1 | .409 (10.39) | .172 (4.37) | .570 (14.48) | .089 (2.26) |
| | 2 | .379 ( 9.63) | .219 (5.56) | .570 (14.48) | .089 (2.26) |
| | 3 | - | - | .570 (14.48) | .089 (2.26) |
| 15 | 1 | .559 (14.20) | .172 (4.37) | .720 (18.29) | .089 (2.26) |
| | 2 | .529 (13.44) | .219 (5.56) | .720 (18.29) | .089 (2.26) |
| | 3 | - | - | .720 (18.29) | .089 (2.26) |
| 21 | 1 | .709 (18.00) | .172 (4.37) | .870 (22.10) | .089 (2.26) |
| | 2 | .679 (17.25) | .219 (5.56) | .870 (22.10) | .089 (2.26) |
| | 3 | - | - | .870 (22.10) | .089 (2.26) |
| 25 | 1 | .809 (20.55) | .172 (4.37) | .970 (24.64) | .089 (2.26) |
| | 2 | .779 (19.79) | .219 (5.56) | .970 (24.64) | .089 (2.26) |
| | 3 | - | - | .970 (24.64) | .089 (2.26) |
| 31 | 1 | .959 (24.36) | .172 (4.37) | 1.120 (28.45) | .089 (2.26) |
| | 2 | .929 (23.60) | .219 (5.56) | 1.120 (28.45) | .089 (2.26) |
| | 3 | - | - | 1.120 (28.45) | .089 (2.26) |
| 37 | 1 | 1.109 (28.17) | .172 (4.37) | 1.270 (32.26) | .089 (2.26) |
| | 2 | 1.079 (27.41) | .219 (5.56) | 1.270 (32.26) | .089 (2.26) |
| | 3 | - | - | 1.270 (32.26) | .089 (2.26) |
| 51 | 1 | 1.059 (26.90) | .215 (5.46) | 1.220 (30.99) | .089 (2.26) |
| | 2 | 1.029 (26.14) | .261 (6.63) | 1.220 (30.99) | .089 (2.26) |
| | 3 | - | - | 1.220 (30.99) | .089 (2.26) |

NOTE:
1. Front mounting (figure 1) and rear mounting (figure 2) accommodates #2-56 screws.
2. Front mounting is preferred. However, when rear mounting is necessary. use detail on previous page.
3. Edgeboard mounting bracket (figure3) uses #2-56 screws. Dimension .450 ± .002 (11.43 ± 0.05) locates the MD receptacle flush with the end of the board.

Dimensions shown in ( ) are in mm
Specifications and dimensions subject to change

# Micro-D Plastic Shell - .050" Contact Spacing MD/MDV

## How to Order

| R | MD | 1- | 9 | P | H | 001 | P |
|---|---|---|---|---|---|---|---|

**RoHS Compliant**
**Series-Insulator Style-Material**
**Contact spacing**
**Contact Arrangement**
**Contact Type**
**Termination Type**
**Termination Code**
**Locking Software**

**Series-Insulator Style-Material**
MD - Clip mounting -Diallyl phthalate
MDV - Clip mounting-Polyester

**Contact Spacing**
1 - .050 (1.27) centers

**Contact Arrangement**
9-15-21-25-31*-37-51. See page 13.

**Contact Type**
P - Pin
S - Socket

**Termination Type**
H - Insulated solid or stranded wire
L - Uninsulated solid wire
S - Solder pot to accept #26 AWG max. harness wire.

**Termination Code****
(H) 001 - 18", 7/34 strand, #26 AWG, MIL-W-16878/4, Type E Teflon, Yellow.
(H) 003 - 18", 7/34 strand, #26 AWG, MIL-W-16878/4, Type E Teflon, color coded to MIL-STD-681 System I.
(L) 1 - 1/2" uninsulated solid #25 AWG gold plated copper.
(L) 2 - 1" uninsulated solid #25 AWG gold plated copper.

No designator - No hardware - standard mounting.091 (2.31) hole diameter
*Not available in clip mounting. **See page 81-87 for additional codes

RoHS COMPLIANT PART NUMBERS

## With Clip Mounting Slots

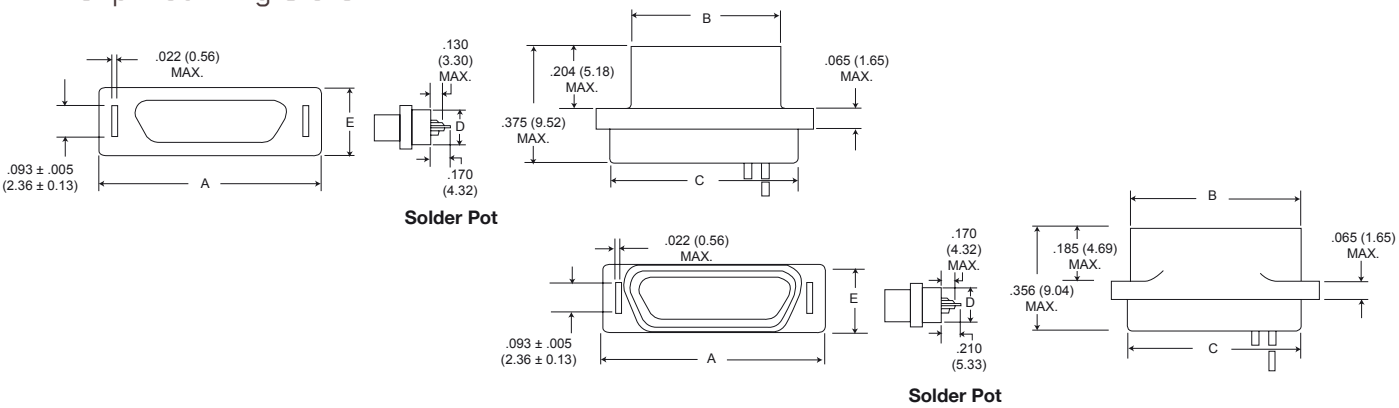


| Part Number By Shell Size | | A Max. | B Max. | C Max. | D Max. | E Max. | Avg. Weight*** ±5% (oz.)/±5% (gm.) |
|---|---|---|---|---|---|---|---|
| MD1-9P** | MDV1-9-P** | .512 (13.00) | .292 (7.42) | .405 (10.29) | .170 (4.32) | .215 (5.46) | .026 (0.73) |
| MD1-9S** | MDV1-9S** | .512 (13.00) | .376 (9.55) | .405 (10.29) | .170 (4.32) | .215 (5.46) | .026 (0.73) |
| MD1-15P** | MDV1-15P** | .662 (16.81) | .442 (11.23) | .555 (14.10) | .170 (4.32) | .215 (5.46) | .038 (1.10) |
| MD1-15S** | MDV1-15S** | .662 (16.81) | .526 (13.36) | .555 (14.10) | .170 (4.32) | .215 (5.46) | .038 (1.10) |
| MD1-21P** | MDV1-21P** | .812 (20.62) | .592 (15.04) | .705 (17.91) | .170 (4.32) | .215 (5.46) | .053 (1.50) |
| MD1-21S** | MDV1-21S** | .812 (20.62) | .676 (17.17) | .705 (17.91) | .170 (4.32) | .215 (5.46) | .050 (1.40) |
| MD1-25P** | MDV1-25P** | .912 (23.16) | .692 (17.58) | .805 (20.45) | .170 (4.32) | .215 (5.46) | .063 (1.80) |
| MD1-25S** | MDV1-25S** | .912 (23.16) | .776 (19.71) | .805 (20.45) | .170 (4.32) | .215 (5.46) | .056 (1.60) |
| MD1-37P** | MDV1-37P** | 1.212 (30.78) | .992 (25.20) | 1.105 (28.07) | .170 (4.32) | .215 (5.46) | .086 (2.45) |
| MD1-37S** | MDV1-37S** | 1.212 (30.78) | 1.076 (27.33) | 1.105 (28.07) | .170 (4.32) | .215 (5.46) | .076 (2.15) |
| MD1-51P** | MDV1-51P** | 1.162 (29.51) | .942 (23.93) | 1.055 (26.80) | .213 (5.41) | .258 (6.55) | .109 (3.10) |
| MD1-51S** | MDV1-51S** | 1.162 (29.51) | .026 (26.06) | 1.055 (26.80) | .213 (5.41) | .258 (6.55) | .093 (2.65) |

** Add lead type and length, see Part Number Explanation. *** Weight given is with 1/2", uninsulated solid #25 AWG gold plated copper pigtails.

ITT

Dimensions shown in ( ) are in mm
Specifications and dimensions subject to change

# Micro-D Plastic Shell - .050" Contact Spacing MD**

## Panel Mounting Hardware

| Description | Part Number |
|---|---|
| Panel Mounting Key | 201-9100-000 |
| Mounting Key and Coupling Clip Assembly | 294-9100-000 |
| Mounting Screw Bracket | 015-9100-000 |
| *Edgeboard Mounting Bracket | 015-5009-000 |
| **Edgeboard Mounting Bracket and Coupling Clip Assembly | MD51428-1 |

* Must be ordered separately; specify left and right hand for complete assembly.
** Must be ordered separately; assembly contains set of left and right hand types.

### Dimensions (Clip Mounting Only)

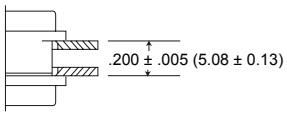


**Plug and Receptacle Rear Mounted**

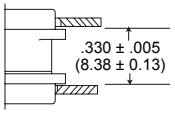


**Plug and Receptacle Front Mounted**

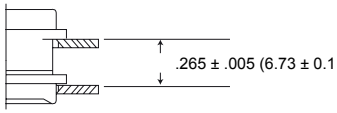


**Plug Front Mounted Receptacle Rear Mounted**

## Panel Cutouts

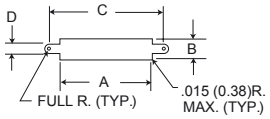


**Figure 1**

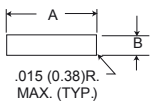


**Figure 2**

**Front Mounting**

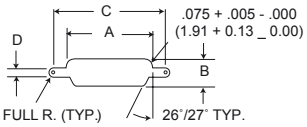


**Figure 3**
**Rear Mounting**

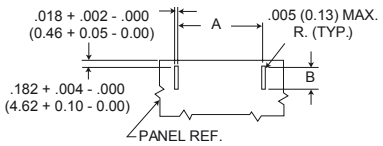


**Figure 4**
**Edgeboard Mounting**

| Shell Size | Cutout Figure | A + .004 (0.10) - .000 (0.00) | B + .004 (0.10) - .000 (0.00) | C + .004 (0.10) - .000 (0.00) | D + .005 (0.13) - .000 (0.00) |
|---|---|---|---|---|---|
| 9 | 1 | .408 (10.36) | .172 (4.37) | .650 (16.51) | .089 (2.26) |
| | 2 | .408 (10.36) | .172 (4.37) | - | - |
| | 3 | .378 ( 9.60) | .217 (5.51) | .650 (16.51) | .089 (2.26) |
| | 4 | .400 (10.16) | .091 (2.31) | - | - |
| 15 | 1 | .588 (14.94) | .172 (4.37) | .795 (20.19) | .089 (2.26) |
| | 2 | .588 (14.94) | .172 (4.37) | - | - |
| | 3 | .528 (13.28) | .217 (5.51) | .795 (20.19) | .089 (2.26) |
| | 4 | .550 (13.97) | .091 (2.31) | - | - |
| 21 | 1 | .738 (18.75) | .172 (4.37) | .945 (24.00) | .089 (2.26) |
| | 2 | .738 (18.75) | .172 (4.37) | - | - |
| | 3 | .678 (17.27) | .217 (5.51) | .945 (24.00) | .089 (2.26) |
| | 4 | .700 (17.78) | .091 (2.31) | - | - |
| 25 | 1 | .838 (21.29) | .172 (4.37) | 1.045 (26.54) | .089 (2.26) |
| | 2 | .838 (21.29) | .172 (4.37) | - | - |
| | 3 | .778 (19.76) | .217 (5.51) | 1.045 (26.54) | .089 (2.26) |
| | 4 | .800 (20.32) | .091 (2.31) | - | - |
| 37 | 1 | 1.138 (28.91) | .172 (4.37) | 1.345 (34.16) | .089 (2.26) |
| | 2 | 1.138 (28.91) | .172 (4.37) | - | - |
| | 3 | 1.078 (27.38) | .217 (5.51) | 1.345 (34.16) | .089 (2.26) |
| | 4 | 1.078 (27.38) | .091 (2.31) | - | - |
| 51 | 1 | 1.088 (27.64) | .215 (5.46) | 1.295 (32.89) | .089 (2.26) |
| | 2 | 1.088 (27.64) | .215 (5.46) | - | - |
| | 3 | 1.028 (26.11) | .260 (6.60) | 1.295 (32.89) | .089 (2.26) |
| | 4 | 1.050 (26.67) | .091 (2.31) | - | - |

NOTE:
1. A panel thickness of 1/8" (3.17mm) maximum is recommended for ease of tab bending when a panel mounting key & clip assembly or edgeboard mounting brackets are used.
2. Front mounting is preferred. However, when rear mounting is necessary, use figure 3 for dimensions.
3. Figure 4 is for edge board mounting bracket or edgeboard clip assembly. The .184 +_ .002 (2.67 +_ 0.05) dimension locates the MD socket insulator flush with the end of the board.
4. Screw brackets (015-9100-000) will accommodate #2-56 screws.
5. Front mounting (Figure 1) and rear mounting (Figure 3) accommodate #2-56 screws.

Dimensions shown in ( ) are in mm
Specifications and dimensions subject to change

# Micro Center Jackscrew

# MJS



Cannon's MJS Micro Center Jackscrew Series provides a reliable interconnect for board-to-board, board-to-cable and inline cable-to-cable applications. Layouts accommodating up to 76 MicroPin/Micro-Socket contacts are available with a wide range of options.

## How to Order

| R | MJS | * | - | 26 | P | H | 001 |
|---|---|---|---|---|---|---|---|

**RoHS Compliant**
**Series**
**Insulator Material**
**Contact Arrangement**
**Contact Type**
**Termination Type**
**Termination Code**

**Series**
MJS - Micro Center Jackscrew

**Insulator Material**
B - Diallyl phthalate
V - Polyester
U - Polyetherimide
R - Polyphenylene sulfide

**Contact Arrangements**
**Unshrounded Receptacle:** 10, 26, 51, 66
**Shrouded Receptacle:** 10, 26, 34, 38, 42, 76
**Low Profile Plug and Receptacle** (shrouded): 28

**Contact Type**
P - Pin
S - Socket

**Termination Type**
H - Insulated wire harness.
I - Integral tail (MJSV-28S only).
L - Solid - uninsulated wire.
S - Solder pot to accept #26 AWG harness wire.
T - Thru bundle pigtail (MJSV-28P only).

**Termination Codes***
(H) 001 - 18" , 7/34 strand, #26 AWG, MIL-W-16878/4, Type E Teflon, yellow.
(H) 003 - 18", 7/34 strand, #26 AWG, MIL-W-16878/4, Type E Teflon, color coded to MIL-STD-681 System I.
(L) 1 - 1/2" uninsulated solid #25 AWG gold plated copper.
(L) 2 - 1" uninsulated solid #25 AWG gold plated copper.

* See Termination Codes shown below.

RoHS COMPLIANT PART NUMBERS

## Standard Wire Termination Codes

The following termination codes are listed for your information. For additional codes please refer to Appendix on pp. 88-91. All wire lengths are minimum.

**Harness Type (H)**
#26 AWG per MIL-W-16878/4 Type E Teflon, 7/34 stranded.

| Length | All Yellow | Color Coded |
|---|---|---|
| 3 (76.2) | H 020 | H 027 |
| 6 (152.4) | H 019 | H 016 |
| 8 (203.2) | H 026 | H 034 |
| 10 (254.0) | H 029 | H 025 |
| 12 (304.8) | H 028 | H 002 |
| 18 (457.2) | H 001 | H 003 |
| 20 (508.0) | H 038 | H 023 |

| Length | All Yellow | Color Coded |
|---|---|---|
| 24 (609.6) | H 009 | H 004 |
| 30 (762.0) | H 010 | H 005 |
| 36 (914.4) | H 011 | H 006 |
| 48 (1219.2) | H 013 | H 048 |
| 72 (1828.8) | H 017 | H 046 |
| 120 (3048.0) | H 042 | H 041 |

**Solid Uninsulated Type (L)**
#25 AWG gold plated solid copper.

| Termination Code | Length | Termination Code | Length |
|---|---|---|---|
| L61 | .125 (3.18) | L14 | .750 (19.05) |
| L56 | .150 (3.81) | L2 | 1.000 (25.40) |
| L57 | .190 (4.83) | L7 | 1.500 (38.10) |
| L39 | .250 (6.35) | L6 | 2.000 (50.80) |
| L58 | .375 (9.53) | L16 | 2.500 (63.50) |
| L1 | .500 (12.70) | L10 | 3.000 (76.20) |

## Contact Arrangements

Face view of pin-use reverse order for socket

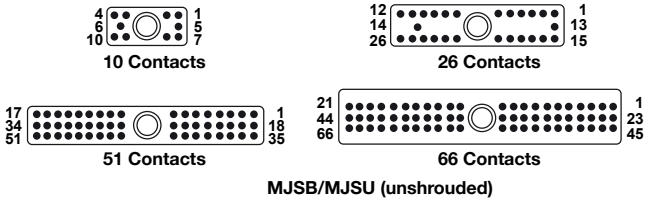


MJSB/MJSU (unshrouded)

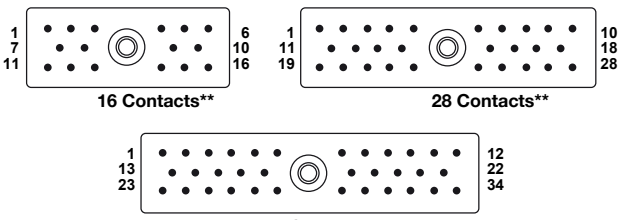


MJSV (shrouded)

Identification numbers are for reference only and do not appear on connectors.
*Low profile configuration **MJSV & MJSR

Dimensions shown in ( ) are in mm
Specifications and dimensions subject to change

# Micro Center Jackscrew

MJS

## Unshrouded Receptacle (10-26-51-66)

MJSB/MJSU

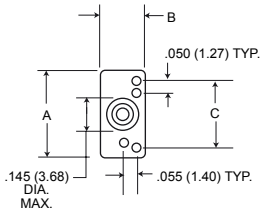


**Rear View**

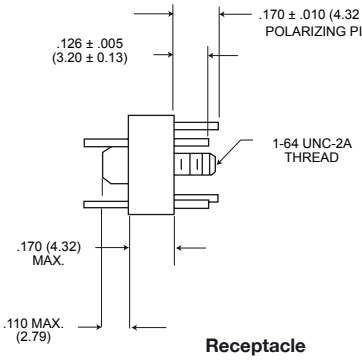


**Receptacle**

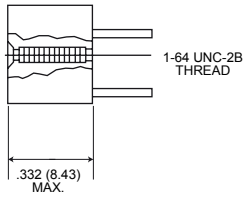


**Plug**

| Unshrouded Standard Materials and Finishes | |
|---|---|
| Micropin | Copper alloy, 50 miro-inch gold |
| Microsocket | Copper alloy, 50 micro-inch gold |
| Insulator | Diallyl phthalate, green color<br>or polyetherimide, natural color |
| Jackscrew | Stainless steel, passivated & lubricated |
| Retainer, Jackscrew | Stainless steel, passivated |
| Insert, Threaded | Stainless steel, passivated |
| Post, Polarizing | Stainless steel, passivated |

| Part Number | A<br>Max. | B<br>Max. | C<br>Bsc. |
|---|---|---|---|
| MJSB or MJSU-10P | .378 (9.60) | .190 (4.83) | .290 (7.37) |
| MJSB or MJSU-10S | .378 (9.60) | .190 (4.83) | .290 (7.37) |
| MJSB or MJSU-26P | .778 (19.76) | .190 (4.83) | .690 (17.53) |
| MJSB or MJSU-26S | .778 (19.76) | .190 (4.83) | .690 (17.53) |
| MJSB or MJSU-51P | 1.028 (26.11) | .260 (6.60) | .940 (23.88) |
| MJSB or MJSU-51S | 1.028 (26.11) | .260 (6.60) | .940 (23.88) |
| MJSB or MJSU-66P | 1.280 (32.51) | .260 (6.60) | 1.190 (30.23) |
| MJSB or MJSU-66S | 1.280 (32.51) | .260 (6.60) | 1.190 (30.23) |

## Shrouded Receptacle (16-28*-34)

MJSB/MJSU

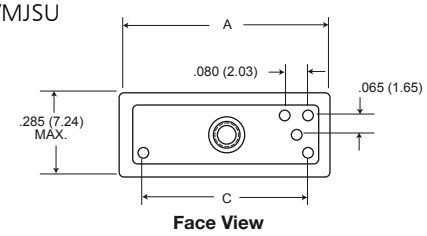


**Face View**

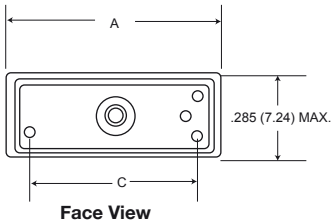


**Face View**

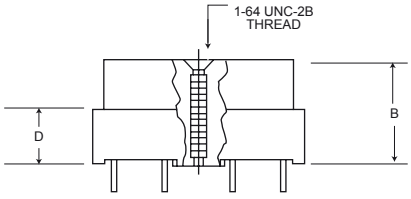


**Plug**

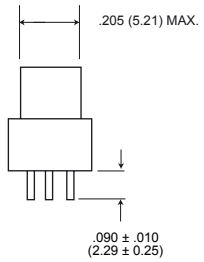


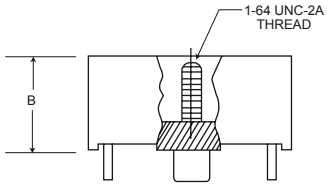


**Receptacle**

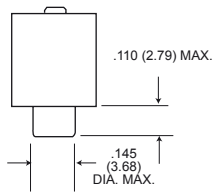


| Shrouded Standard Materials and Finishes | |
|---|---|
| Micropin | Copper alloy, 50 miro-inch gold |
| Microsocket | Copper alloy, 50 micro-inch gold |
| Insulator | Polyester, black color<br>Polyphenylene sulfide, black color |
| Jackscrew | Stainless steel, passivated |
| Retainer, Jackscrew | Stainless steel, passivated |
| Insert, Threaded | Stainless steel, passivated |
| Post, Polarizing | Stainless steel, passivated |

| Part Number | A<br>Max. | B<br>Max. | C<br>Ref. | D<br>± .006 (0.15) |
|---|---|---|---|---|
| MJSV or MJSR-16P | .700 (17.78) | .345 (8.76) | .545 (13.84) | .175 (4.45) |
| MJSV or MJSR-16S | .700 (17.78) | .320 (8.13) | .545 (13.84) | - |
| MJSV-28P* or MJSR-28P* | 1.020 (25.91) | .232 (5.89) | .865 (21.97) | .062 (1.57) |
| MJSV-28S* or MJSR-28S* | 1.020 (25.91) | .246 (6.25) | .865 (21.97) | - |
| MJSV-34P or MJSR-34P | 1.180 (29.97) | .330 (8.38) | 1.025 (26.04) | .160 (4.06) |
| MJSV-34S or MJSR-34S | 1.180 (29.97) | .305 (7.75) | 1.025 (26.04) | - |

*Low profile configuration, for "L" (uninsulated solid wire) termination add .090 (2.29) to the "B" dimension. For "H" (insulated wire) termination add .200 (5.08) to the "B" dimension. For special configurations with backpotted standoffs consult factory.

Dimensions shown in ( ) are in mm
Specifications and dimensions subject to change

# Micro Center Jackscrew

# MJS

## Shrouded Plug

MJSR-42P

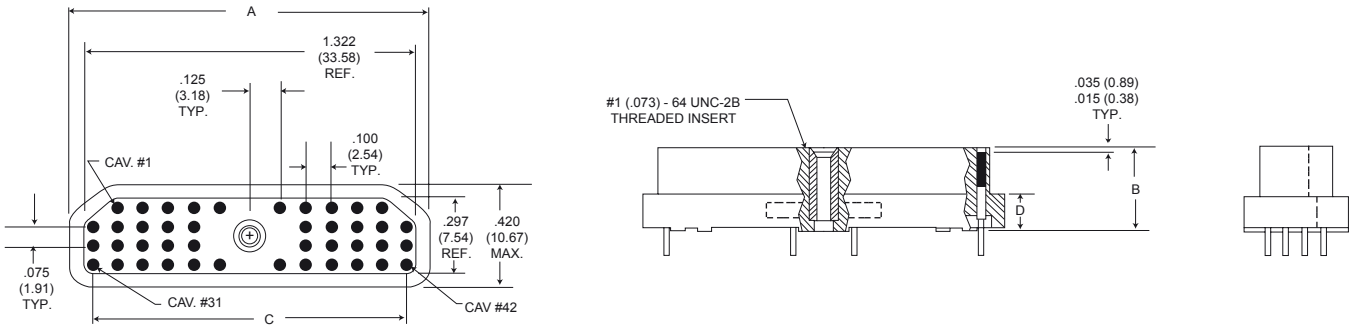


## Shrouded Receptacle

MJSR-42S

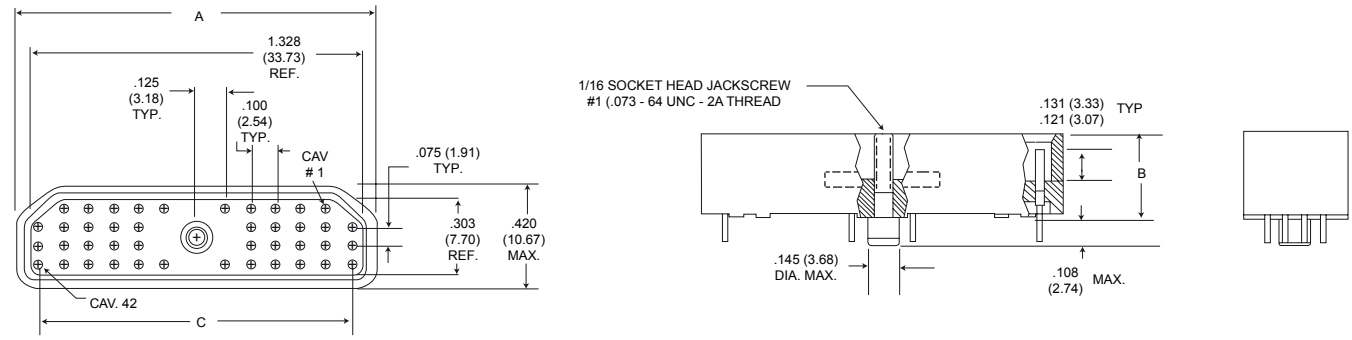


| Standard Materials and Finishes | |
|---|---|
| Micropin | Copper alloy, 50 miro-inch gold |
| Microsocket | Copper alloy, 50 micro-inch gold |
| Insulator | Polyphenylene sulfide, black color |
| Jackscrew | Stainless steel, passivated |
| Retainer, Jackscrew | Stainless steel, passivated |
| Insert, Threaded | Stainless steel, passivated |

| Part Number | A<br>Max. | B<br>Max. | C<br>Ref. | D<br>± .006 (0.15) |
|---|---|---|---|---|
| MJSR-42P | 1.445 (36.70) | .345 (8.76) | 1.250 (31.75) | .142 (3.61) |
| MJSR-42S | 1.445 (36.70) | .357 (9.07) | 1.250 (31.75) | - |

# Micro Center Jackscrew

# MJS

## Shrouded Receptacle (76)

MJSR-76P

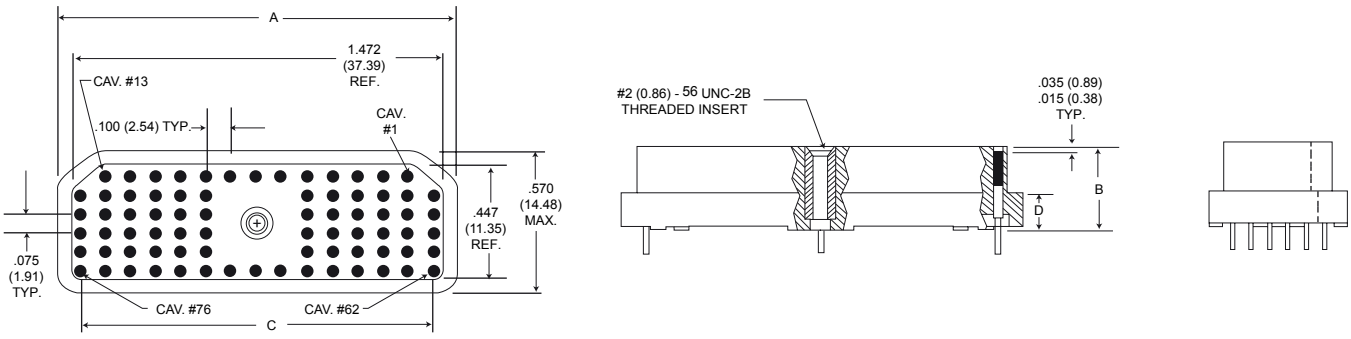


MJSR-76S

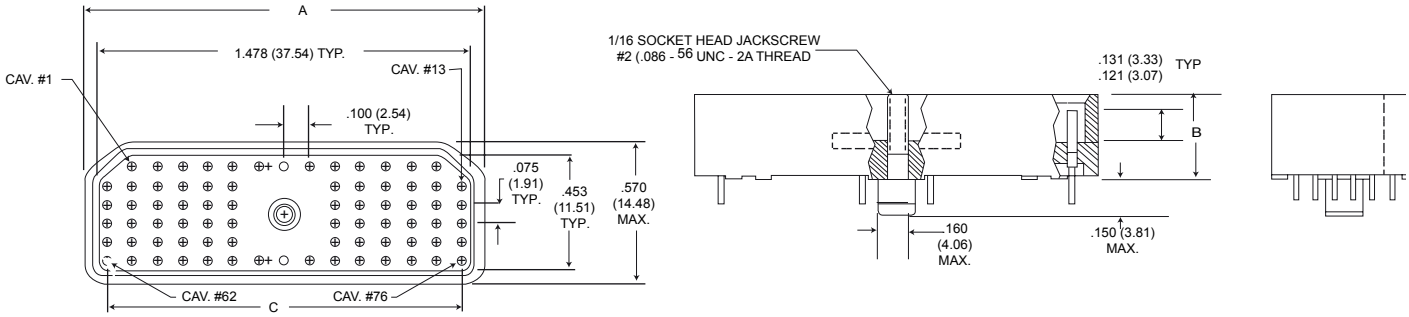


| Standard Materials and Finishes | |
|---|---|
| Micropin | Copper alloy, 50 miro-inch gold |
| Microsocket | Copper alloy, 50 micro-inch gold |
| Insulator | Polyphenylene sulfide, black color |
| Jackscrew | Stainless steel, passivated |
| Retainer, Jackscrew | Stainless steel, passivated |
| Insert, Threaded | Stainless steel, passivated |

| Part Number | A<br>Max. | B<br>Max. | C<br>Ref. | D<br>± .006 (0.15) |
|---|---|---|---|---|
| **MJSR-76P** | 1.595 (40.51) | .345 (8.76) | 1.400 (35.56) | .142 (3.61) |
| **MJSR-76S** | 1.595 (40.51) | .357 (9.07) | 1.400 (35.56) | - |

Dimensions shown in ( ) are in mm
Specifications and dimensions subject to change

## Plug (Molded-In Insert - Special)

MJSV**P

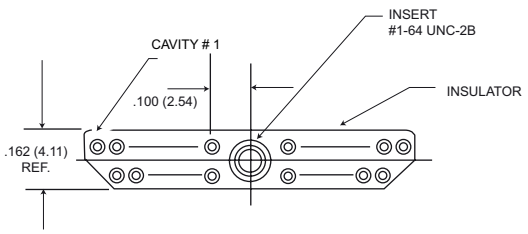


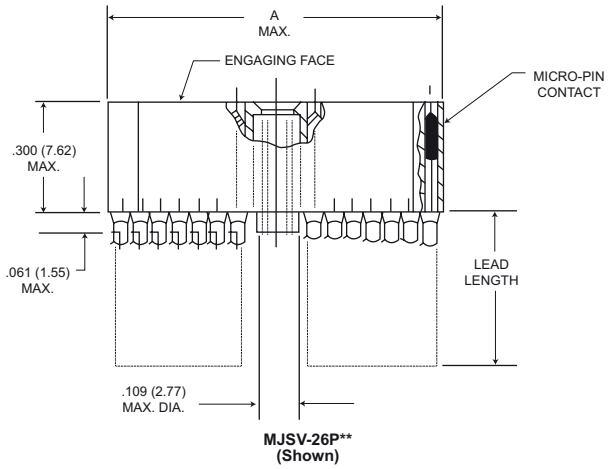


**MJSV-26P**
(Shown)**

| Part Number | A Max. |
|---|---|
| MJSV-26P** | .868 (22.05) |
| MJSV-38P** | 1.168 (29.67) |

## Receptacle (Special)

MJSV**S*

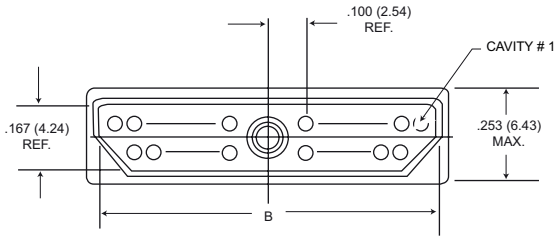


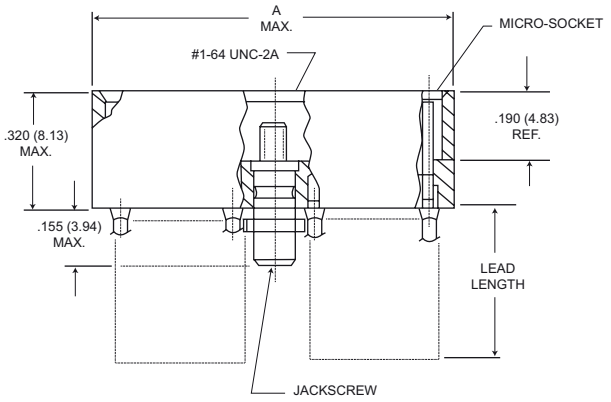


**MJSV-26S**
(Shown)**

| Part Number | A Max. | B Max. |
|---|---|---|
| MJSV-26S** | .943 (23.95) | .874 (22.20) |
| MJSV-38S** | 1.243 (31.57) | 1.174 (29.82) |

## Contact Arrangements

Face view of pin - use reverse order for socket

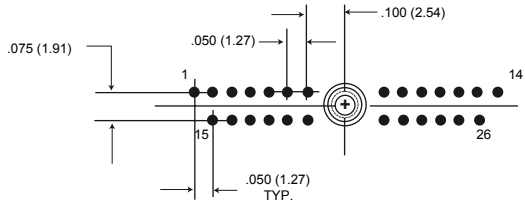


**26 Contacts**

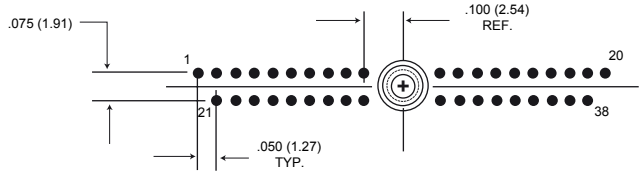


**38 Contacts**

Identification numbers are for reference and do not appear on connectors.

# Microminiature Circular - .050" Contact Spacing MIK



Cannon's MIK Microminiature Circular Series Connectors are ruggedized, lightweight and meet the applicable requirements of MIL-DTL- 83513. Key markets and applications include biomedical, instrumentation and miniature black boxes. Our MIK Connector is designed to accommodate up to 55 contacts on .050 (1.27) centers (equivalent to 420 contacts per square inch). Five keyway polarization prevents cross plugging. Standard MIK Connectors are available in two shell sizes accommodating two contact arrangements pre-wired to your specific requirements. The threaded coupling nuts support connector strength and reliability. MIK receptacles can either be front or back panel mounted.

## How to Order

| R | MIK | M | 6- | 55 | P | * | ** | *** |
|---|---|---|---|---|---|---|---|---|

**RoHS Compliant**
**Series**
**Connector Type**
**Shell Type**
**Contact Arrangement**
**Contact Type**
**Termination Type**
**Termination Length Code**
**Hardware**

**Series**
MIK - Microminiature Circular

**Connector Type**
Blank - Screw couping, plastic
M - Screw coupling, metal shell
Q - Push/Pull, metal shell

**Shell Styles**
Blank - Wall mounting receptacle MIK and MIKM only)
6 - Straight plug (MIKM and MIKQ)
7 - Jam nut mount (MIKQ only)
9 - Rear panel mounted receptacle (MIKQ)

**Contact Arrangements**
7, 19, 37, 55, 85s

**Contact Type**
P - Pin
S - Socket

**Termination Types**
H - Insulated round hook-up wire
L - Uninsulated round solid wire

**Termination Length Code (Standards)**
(H) 001 - 18", 7/34 strand, #26 AWG, MIL-W-16878/4, Type E Teflon, yellow.
(H) 003 - 18",7/34 strand, #26 AWG, MIL-W-16878/4, Type E Teflon, color coded to MIL-STD-681 System I.
(L) 1 - 1/2" uninsulated solid #25 AWG gold plated copper.
L) 2 - 1" uninsulated solid #25 AWG gold plated copper.

**Hardware**
G - Cable nut and grip (MIKQ plug only)
N - Nut only (MIKQ plug only)

RoHS COMPLIANT PART NUMBERS

NOTE: Contact types cannot be interchanged between shell styles.

## Contact Arrangements

Face View, Pin Side-(Male Twist Pin Contacts)

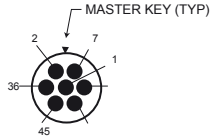

MIK/MIKM/MIKQ
7 Contacts

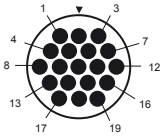

MIKQ
19 Contacts

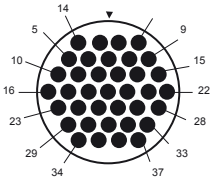

MIKQ
37 Contacts

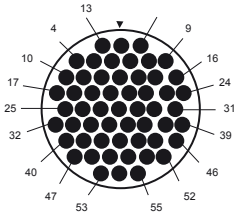

MIK/MIKM
55 Contacts

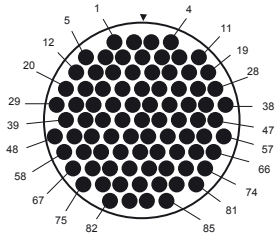

MIKM
85 Contacts

Cavity identification numbers are for reference only, they do not appear on connectors.

Dimensions shown in ( ) are in mm
Specifications and dimensions subject to change

# Microminiature Circular - .050" Contact Spacing MIK

MIK Connectors accommodate up to 55 contacts on .050 (1.27) centers (equivalent to 420 contacts per square inch). Five keyway polarization prevents cross plugging. The threaded coupling nuts provide strong, reliable coupling. MIK receptacles can be either front or back panel mounted; in back mounting applications, panel thickness of up to 3/32" can be used on larger sizes. Maximum temperature range -55°C to +125°C. Standard MIK connectors are available in two shell sizes, accommodating two contact arrangements pre-wired to your specific requirements.

## Specifications

| Standard Materials and Finishes | |
|---|---|
| | **MIK** |
| Shell | Thermoplastic |
| Coupling Nut | Stainless Steel Passivated |
| Insulator | Glass-reinforced Thermoplastic |
| Contacts | 50 Microinch<br>Gold Plated<br>Copper Alloy |

| Electro/Mechanical Features | |
|---|---|
| | **MIKM** |
| No of Contacts | 7,55 |
| Wire Size | #24 AWG thru #32 AWG |
| Contact Termination | Crimp |
| Contact Rating | 3 Amps |
| Coupling | Threaded |
| Polarization | Keyways |
| Contact Spacing | .050 (1.27) Centers |
| Shell Styles | 0-Wall Mtg. 6-Straight Plug |

## Standard Wire Termination Codes

The following termination codes are listed for your information.
For additional codes please refer to Appendix pp. 88-91.
All wire lengths are minimum.

**Harness Type (H)**
#26 AWG per MIL-W-16878 Type E, Teflon Stranded

| Length | All Yellow | Color Coded |
|---|---|---|
| 3 (76.2) | 020 | 027 |
| 6 (152.4) | 019 | 016 |
| 8 (203.2) | 026 | 034 |
| 10 (254.0) | 029 | 025 |
| 12 (304.8) | 028 | 002 |
| 18 (457.2) | 001 | 003 |
| 20 (508.0) | 038 | 023 |
| 24 (609.6) | 009 | 004 |
| 30 (762.0) | 010 | 005 |
| 36 (914.4) | 011 | 006 |
| 48 (1219.2) | 013 | 048 |
| 72 (1828.8) | 017 | 046 |
| 120 (3048.0) | 042 | 041 |

## Shell Dimensions

MIK (Rear Panel Mount Thickness - see Tabulation "T")

Weight given is 1/2" uninsulated, solid #25 AWG gold plated copper pigtails

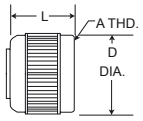


**Plug**

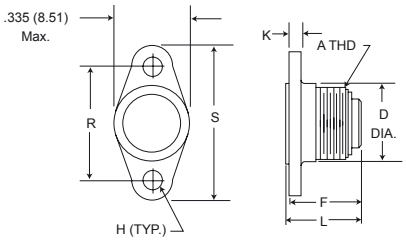


**Receptacle**
**Shell Size 7 only**

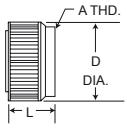


**Plug**

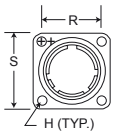


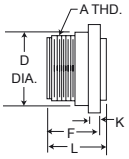


**Receptacle**
**Shell Size 55 only**

## Plug

| Part Number By Shell Size | A Thread | D Max. | L Max. | Avg. Weight** (oz) (gm.) ± 5% |
|---|---|---|---|---|
| MIK6-7P | 5/16-24UNF-2B | .375 (9.52) | .315 (8.00) | .054 (1.54) |
| MIK6-55P | 9/16-24UNF-2A | .755 (19.18) | .460 (11.68) | .202 (5.72) |

## Receptacle

| Part Number By Shell Size | A Thread | D ± .010 (0.25) | F Max. | H ± .003 (0.08) | K ± .010 (0.25) | L Max. | R ± .005 (0.13) | S Max. | T Max. | Avg. Weight oz. (gm.) ± 5% |
|---|---|---|---|---|---|---|---|---|---|---|
| MIK0-7S | 5/16-24UNF-2B | .325 (8.26) | .315 (8.00) | .078 (1.98) | .062 (1.57) | .355 (9.02) | .460 (11.68) | .630 (16.00) | .032 (0.81) | .022 (.635) |
| MIK0-55S | 9/16-24UNF-2A | .625 (15.88) | .440 (11.18) | .089 (2.26) | .100 (2.54) | .495 (12.57) | .580 (14.73) | .760 (19.30) | .062 (1.57) | .134 (3.81) |

Dimensions shown in ( ) are in mm
Specifications and dimensions subject to change

# Microminiature Circular - .050" Contact Spacing MIKM



Cannon's MIKM Microminiature Circular Connector is designed with a steel shell and receptacle for improved ruggedness and RFI resistance. It accommodates up to 55 contacts on .050 (1.27) centers (equivalent to 420 contacts per square inch) and features five keyway polarization to prevent cross plugging. The threaded coupling nuts offer strong, reliable coupling. MIKM receptacles can be either front or back panel mounted; in back mounting applications, panel thickness of up to 3/32" can be used on the larger sizes. Maximum temperature range - 55°C to + 125°C.

## Specifications

| Standard Material and Finishes | |
|---|---|
| | **MIK** |
| Shell | Stainless Steel |
| Coupling Nut | Stainless Steel Passivated |
| Insulator | Glass-reinforced Thermoplastic |
| Contacts | 50 Microinch<br>Gold Plated<br>Copper Alloy |

| Electro/Mechanical Features | |
|---|---|
| | **MIKM** |
| No. of Contacts | 7,55, 85 |
| Wire Size | #24 AWG thru #32 AWG |
| Contact Termination | Crimp |
| Contact Rating | 3 Amps |
| Coupling | Threaded |
| Polarization | Keyways |
| Contact Spacing | .050 (1.27) Centers |
| Shell Styles | 0-Wall Mtg. 6-Straight Plug |

## Standard Wire Termination Codes

The following termination codes are listed for your information.
For additional codes please refer to Appendix on pp. 88-91.
**All wire lengths are minimum.**

**Harness Type (H)**

#26 AWG per MIL-W-16878 Type E, Teflon Stranded

| Length | -All Yellow | Color Coded |
|---|---|---|
| 3 (76.2) | 020 | 027 |
| 6 (152.4) | 019 | 016 |
| 8 (203.2) | 026 | 034 |
| 10 (254.0) | 029 | 025 |
| 12 (304.8) | 028 | 002 |
| 18 (457.2) | 001 | 003 |
| 20 (508.0) | 038 | 023 |
| 24 (609.6) | 009 | 004 |
| 30 (762.0) | 010 | 005 |
| 36 (914.4) | 011 | 006 |
| 48 (1219.2) | 013 | 048 |
| 72 (1828.8) | 017 | 046 |
| 120 (3048.0) | 042 | 041 |

## Shell Dimensions

MIKM (Rear Panel Mount Thickness .335 (8.51) max. - see Tabulation "T")

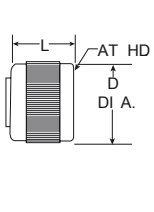


**Plug**

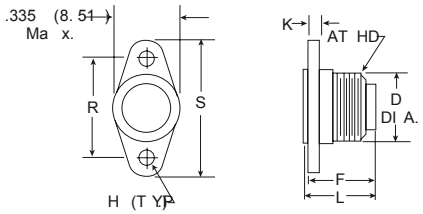


**Receptacle**
**Shell Size 7 only**

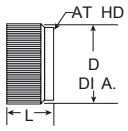


**Plug**

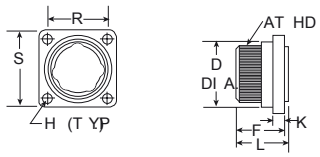


**Receptacle**
**Shell Size 55 & 85**

## Plug

| Part Number By Shell Size | A Thread | D Max. | L Max. | Avg. Weight oz. (gm.)+_5% |
|---|---|---|---|---|
| MIK6-7P | 5/16-24UNF-2A | .375 (9.52) | .315 (8.00) | .054 (1.54) |
| MIK6-55P | 5/8-24UNEF-2B | .755 (19.18) | .440 (11.18) | .333 (9.44) |
| MIKM6-85P | 11/16-24UNEF-2B | .860 (21.84) | .460 (11.68) | .419 (11.88) |

## Receptacle

| Part Number By Shell Size | A Thread | D | F Max. | H ± .003 (0.08) | K | L Max. | R ± .005 (0.13) | S Max. | T Max. | Avg. Weight oz. (gm.) ± 5% |
|---|---|---|---|---|---|---|---|---|---|---|
| MIK0-7S | 5/16-24UNF-2A | .325 (8.26) | .320 (8.13) | .078 (1.98) | .062 (1.57) | .400 (10.16) | .460 (11.68) | .630 (16.00) | .032 (0.81) | .051 (1.45) |
| MIK0-55S | 5/8-24UNEF-2A | .625 (15.88) | .440 (11.18) | .091 (2.31) | .062 (1.57) | .490 (12.45) | .580 (14.73) | .760 (19.30) | .125 (3.18) | .269 (7.62) |
| MIKM0-85S | 11/16-24UNEF-2A | .745 (18.92) | .440 (11.18) | .091 (2.31) | .062 (1.57) | .490 (12.45) | .674 (17.12) | .845 (21.46) | .125 (3.18) | .346 (9.80) |

Dimensions shown in ( ) are in mm
Specifications and dimensions subject to change

# Microminiature Circular - .050" Contact Spacing MIKQ



Cannnon's MIKQ Microminiature Circular Connectors feature a quick disconnect metal shell and a receptacle version that, when engaged, can be instantly disconnected while still providing a solid lock. Applications include commercial TV cameras, portable radios, military gun sights, airborne landing systems and medical equipment. Maximum temperature range is-55°C to +125°C.

## Specifications

| Standard Material and Finishes | |
|---|---|
| | **MIKQ** |
| Shell | Brass |
| Coupling Nut | Brass, Electroless Nickel Plated* |
| Insulator | Glass-reinforced Thermoplastic |
| Contacts | 50 Microinch<br>Gold Plated<br>Copper Alloy |

| Electro/Mechanical Features | |
|---|---|
| | **MIKQ** |
| No. of Contacts | 7,19, 37 |
| Wire Size | #24 AWG thru #32 AWG |
| Contact Termination | Crimp |
| Contact Rating | 3 Amps |
| Coupling | Push/Pull |
| Polarization | Keyways |
| Contact Spacing | .050 (1.27) Centers |
| Shell Styles | 7-Jam Nut 6-Straight Plug<br>9-Rear Panel Mtg. Receptacle |

## Shell Dimensions

MIKQ (Front Panel Mounting Type Shown-.093 (2.36) Thickness)

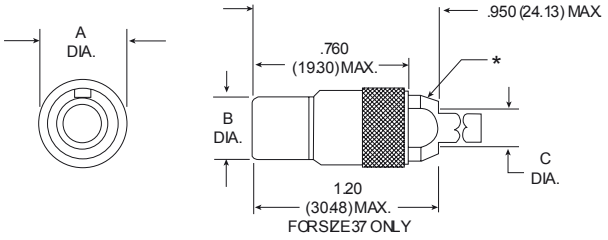


**Plug**

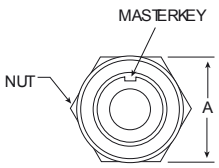


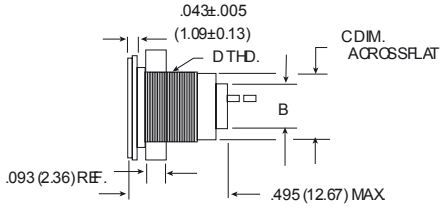


**Receptacle**





### Plug

| Part Number By Shell Size | A Max. | B Max. | C Ref. | Avg. Weight oz. (gm.)±5% |
|---|---|---|---|---|
| MIKQ6-7S | .385 (9.78) | .305 (7.75) | .180 (4.57) | .214 (6.08) |
| MIKQ6-19S | .515 (13.08) | .405 (10.29) | .260 (6.60) | .376 (10.70) |
| MIKQ6-37S | .760 (19.30) | .635 (16.13) | .350 (8.89) | .714 (20.23) |

*Std. Conn. not supplied with Cable Nut & Grip, See Mod Codes. Lanyard Release Is Available. Consult factory.

### Receptacle

| Part Number By Shell Size | A Max. | B Max. | C Max. | D Thread | Avg. Weight oz. (gm.)±5% |
|---|---|---|---|---|---|
| MIKQ7-7P | .510 (12.95) | .245 (6.22) | .359 (9.12) | 3/8-32UNEF-2A | .128 (3.63) |
| MIKQ7-19P | .575 (14.60) | .345 (8.76) | .470 (11.94) | 1/2-28UNEF-2A | .214 (6.08) |
| MIKQ7-37P | .855 (21.71) | .520 (13.20) | .740 (18.80) | 3/4-20UNEF-2A | .300 (8.52) |

## MIKQ Front Panel Mounting

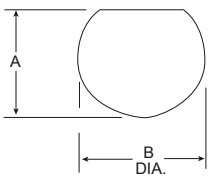


### Front Panel Mounting-MIKQ7

| Shell Size | A ± .005 (0.13) | B DIA. |
|---|---|---|
| MIKQ7-7P | .364 (9.24) | .390 (9.91) |
| MIKQ7-19P | .475 (12.06) | .515 (13.08) |
| MIKQ7-37P | .740 (18.78) | .755 (19.17) |

Dimensions shown in ( ) are in mm
Specifications and dimensions subject to change

## Shell Dimensions

MIKQ9-7P (Back Panel Mounting)

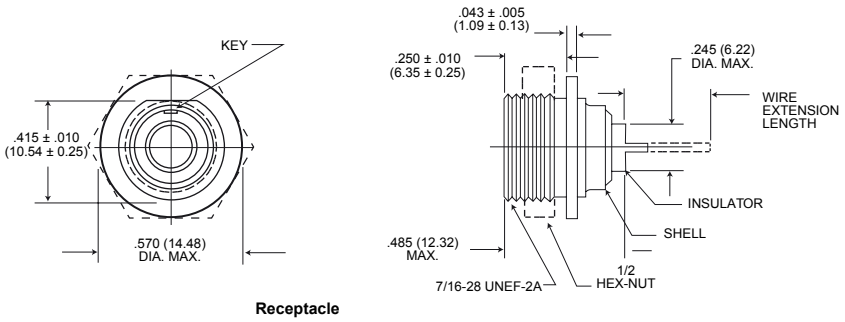


**Receptacle**

MIKQ9-19P (Back Panel Mounting)

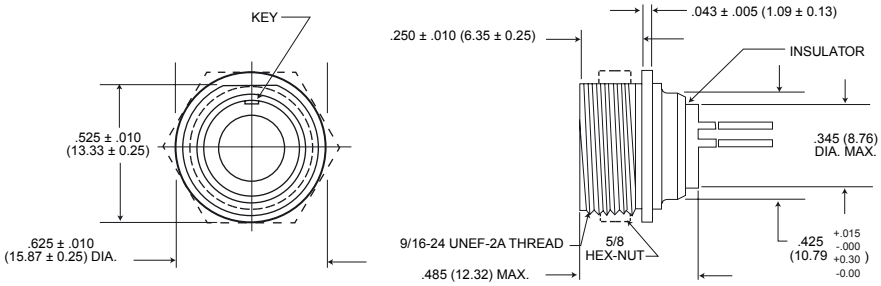


**Receptacle**

MIKQ9-37P (Back Panel Mounting)

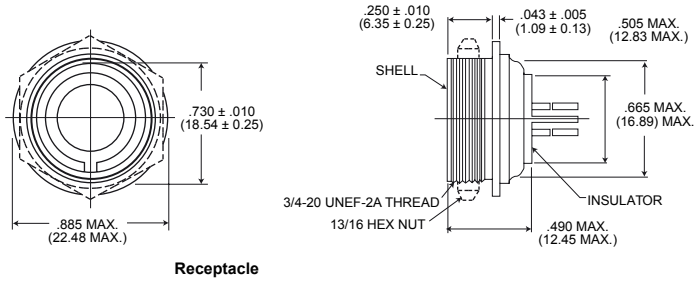


**Receptacle**

MIKQ Rear Panel Mounting

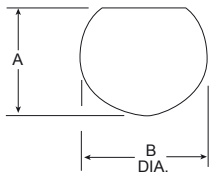


Rear Panel Mounting-MIKQ9

| Shell Size | A ± .005 (0.13) | B DIA. |
|---|---|---|
| MIKQ9-7P | .425 (10.76) | .440 (11.18) |
| MIKQ9-19P | .535 (13.58) | .564 (14.33) |
| MIKQ9-37P | .740 (18.78) | .755 (19.17) |

Dimensions shown in ( ) are in mm
Specifications and dimensions subject to change

# Microstrips .050" Contact Spacing MT



Cannon Microstrips are available in three termination styles: solder cup, pigtail harness and printed circuit leads. The MicroPin Contact System assures maximum performance in a minimum design package. Available with latches or guide pins, our Microstrips provide an extremely dense and reliable interconnection and offer greater application flexibility

## Product Features

- High Performance MicroPin Contact System
- High-density .050" contact spacing
- Pre-wired for ease of installation
- Fully potted wire terminations
- Guide pins for alignment and polarizing
- Quick-disconnect latches
- 3 Amp current rating
- Precision crimp terminations
- Solder cup, pigtail or printed circuit terminations
- Surface mount leads

### MicroPin Contact System

The Cannon MicroPin Contact System offers uncompromising performance in downsized interconnects. The beryllium copper pin contact is fully recessed in the insulator, assuring positive contact alignment and robust performance. The socket contact is precision machined from high strength copper alloy and features a smooth lead-in chamfer.

The MicroPin features seven points of electrical contact. This contact system assures high normal force, excellent wipe and superior shock and vibration performance.

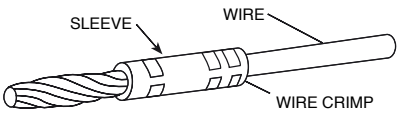


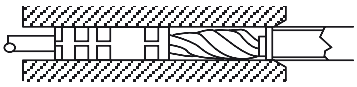

## Specifications

| | |
|---|---|
| **Current Rating** | 3 Amps max |
| **Dielectric Withstanding Voltage** | 600 VAC @ sea level; 300 VAC @ 70,000 feet altitude |
| **Insulation Resistance** | 5000 megohms min. |
| **Contact Resistance** | 8 milliohms max. |
| **Operating Temperature** | MTV polyester -56°C to +125°C; MTB diallyl phthalate -55°C to +150°C, Optional 200°C |
| **Durability** | 500 cycles min. |
| **Shock/Vibration** | 20 G's |
| **Connector Mating Force** | (8 oz.) x (# of contacts) |
| **Latch Retention** | 5 lbs. min. |
| **Wire Size** | #26 AWG insulated wire, #25 AWG uninsulated solid wire. MT strips will also accommodate #24 AWG through #32 AWG.<br>For other wiring options contact the factory for ordering information.<br>General Performance requirements in accordance with MIL-DTL-83513 |

## Materials and Finishes

| | |
|---|---|
| **Insulator** | MTV: Glass-filled polyester per MIL-M-24519; MTB: Glass-filled diallyl phthalate per MIL-M-14 |
| **Contact** | Copper Alloy per MIL-DTL-83513 |
| **Contact Finish** | 50 Microinches Min. Gold Plated per MIL-G-45204 |
| **Insulated Wire** | #26 AWG. 19/38 Stranded, silver-plated copper, TFE Teflon insulation per MIL-W-16878/4 |
| **Uninsulated Solid Wire** | #25 AWG gold-plated copper per QQ-W-343 |
| **Potting Material/Contact Encapsulant** | Epoxy |
| **Latch** | 300 series stainless steel, passivated |

# Microstrips .050" Contact Spacing

## How to Order

| R | MTV1 | - | 16 | P | H001 | 01 | F222 |
|---|---|---|---|---|---|---|---|

**RoHS Compliant**

**Series**
MTB1 – High Temperature Diallyl Phthalate 150°C (Recommended for severe environments)
MTV1 – Polyester 125°C (Recommended for general purpose use), .050" contact spacing
MTV2 – Polyester 125°C (Recommended for general purpose use), .100" contact spacing

**Number of Cavities**
2 through 40.
This number is the total number of cavities including guide pins and latches. 40 positions is the maximum recommended size for standard strips, but sizes up to 120 positions are available on request.

**Insert Arrangements**
P- Pin
S – Socket

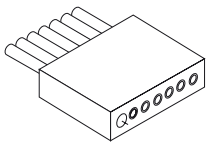
Pin Strip

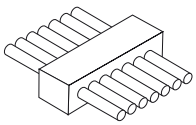
Socket Strip

**Termination Style**

**Solder Cup** contacts for customer termination
S

**Pre-wired Pigtails**
H067 – Pre-wired pigtail with 18" of insulated Teflon wire per M22759/11, #26 AWG, 19 strand, white
HY01 – Pre-wired pigtail with 18" of insulated Teflon wire per M22759/11, #26 AWG, 19 strand, 10 color repeating

**Straight Terminals** .018" diameter, gold-plated
L1 – 5" extension
L2 – 1" extension
L57 – .190" extension
L61 – .125" extension



**Right Angle Terminals** staggered footprint .018" diameter, gold plated
AL57 – .190" extension
AL61 – .125" extension

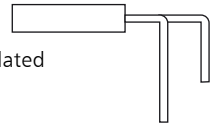

**Right Angle Terminals** .050" in-line footprint .018" diameter, gold plated
BL57 – .190" extension
BL61 – .125" extension

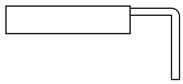

**Surface Mount** .018" diameter, gold-plated
CL1

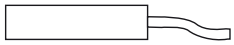

**Guide Pin and Latch Options**
01 – Guide pin installed in end cavities of socket strip. Blank holes in end cavities of pin strip.
02 – Guide pin installed in cavity #1 of socket Strip. Blank holes in cavity #1 of pin strip.
03 – Spring latches installed in end cavities of socket strip. Latch clips installed in end cavities of pin strip. For use with MTV1 only.
04 – Spring latch installed in center cavity of socket strip. Spring latch installed in center cavity of pin strip. For use with MTV1 only.
10 - Guide pin installed in cavity #10 of socket Strip. Blank holes in cavity #10 of pin strip.

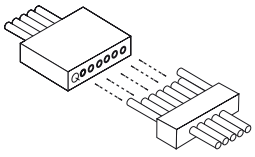
01
Guide Pins In End Cavities

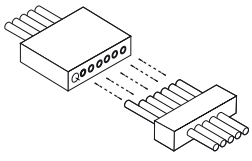
02
Guide Pins In Cavity #1

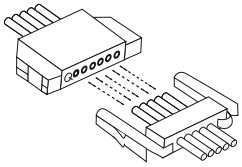
03
End Latches

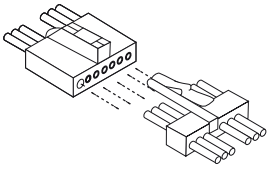
04
Center Latch

**MOD Code**
F222 – High Temperature 200°C

Dimensions shown in ( ) are in mm
Specifications and dimensions subject to change

RoHS COMPLIANT PART NUMBERS

## Connector Weights

| | | | | |
|---|---|---|---|---|
| Contact (with std. 1/2" copper pigtails) | | | | .040 gms. |
| | | MTB | pin | .021 gms. |
| Insulator (per contact cavity) | | MTV | socket | .006 gms. |
| | | | pin | .014 gms. |
| | | | socket | .004 gms. |
| Guide Post | | Stainless Steel | | .035 gms. |
| Latch | | Male | | .035 gms. |
| | | Female | | .074 gms. |

## Terminal Dimensions

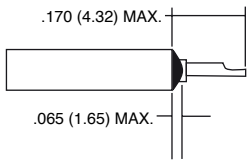


**Solder Cup**

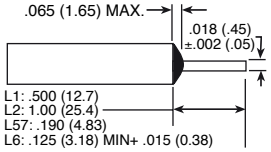


**Straight Terminals**

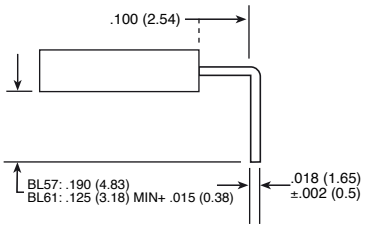


**Right Angle Terminals .050" Centers**

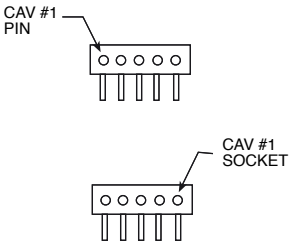


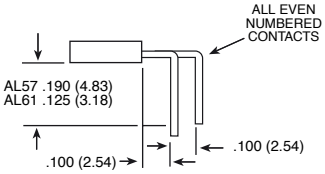


**Right Angle Terminals .100" Spacing Staggered**

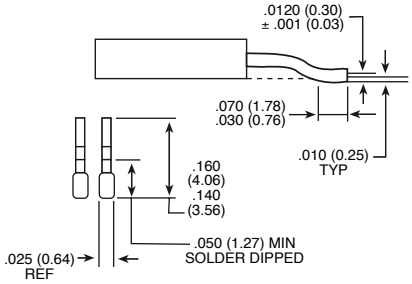


**Surface Mount Terminals**

# Microstrips .050" Contact Spacing

## Latch Dimensions

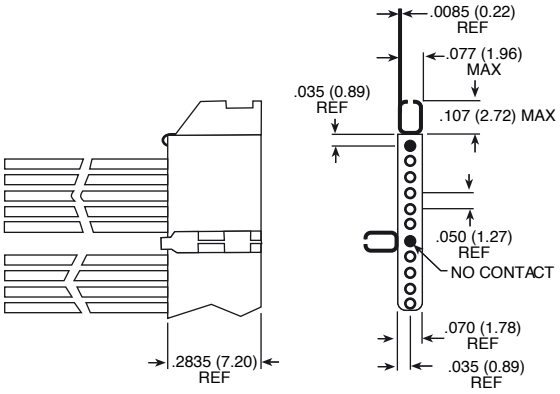


**Female Latch**

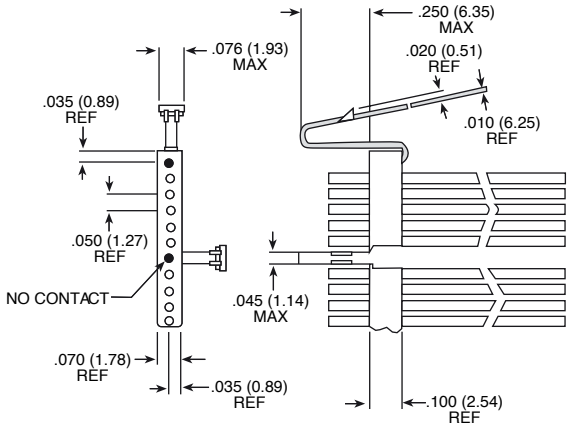


**Male Latch**

## Guide Pin Dimensions

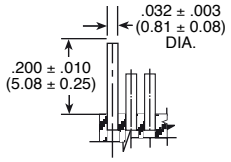


## Standard Wire Termination Codes

The following termination codes are listed for your information.
For additional codes please refer to Appendix on pp. 88-91.
**All wire lengths are minimum.**

**Harness Type (H)**

#26 AWG per MIL-W-16878 Type E; Teflon Stranded

| Length | All Yellow | Color Coded |
|---|---|---|
| 3 (76.2) | H020 | H027 |
| 6 (152.4) | H019 | H016 |
| 8 (203.2) | H026 | H034 |
| 10 (254.0) | H029 | H025 |
| 12 (304.8) | H028 | H002 |
| 18 (457.2) | H001 | H003 |
| 20 (508.0) | H033 | H023 |
| 24 (609.6) | H009 | H004 |
| 30 (762.0) | H010 | H005 |
| 36 (914.4) | H011 | H006 |
| 48 (1219.2) | H013 | H048 |
| 72 (1828.8) | H017 | H046 |
| 120 (3048.0) | H042 | H041 |

**Solid Uninsulated Type - (L)**

#25 AWG Gold Plated Copper

| Termination Code | Length |
|---|---|
| L61 | .125 (3.18) |
| L56 | .150 (3.81) |
| L57 | .190 (4.83) |
| L39 | .250 (6.35) |
| L58 | .375 (9.52) |
| L1 | .500 (12.70) |
| L14 | .750 (19.05) |
| L2 | 1.000 (25.40) |
| L7 | 1.500 (38.10) |
| L6 | 2.000 (50.80) |
| L16 | 2.500 (63.50) |
| L10 | 3.000 (76.20) |

Dimensions shown in ( ) are in mm
Specifications and dimensions subject to change

## Polarization



Modification code "-01" in the Microminiature Strip part number refers to guide posts, which are located on both ends of the socket side of the 50-MIL STRIP connector and feature empty cavities on the pin side to accept the guide posts. Although in many cases it is not necessary to polarize 50-MIL STRIP connectors, there are several ways to prevent cross plugging. One method is the use of guide posts that can be located in specified cavities to ensure the contacts will align when these posts are positioned before mating.

## MTB1 and MTV1 - .050 (1.27) Contact Centers

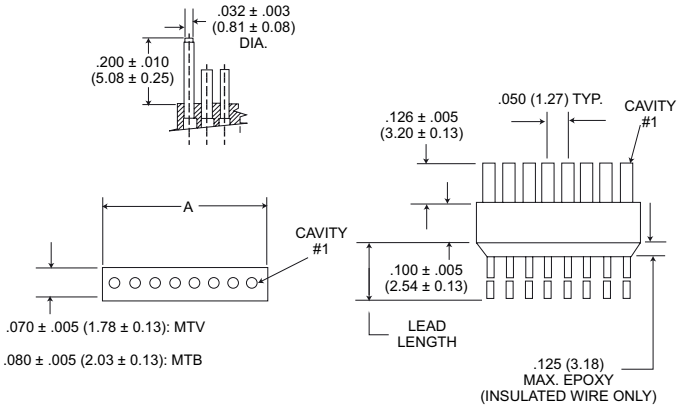


**Receptacle**

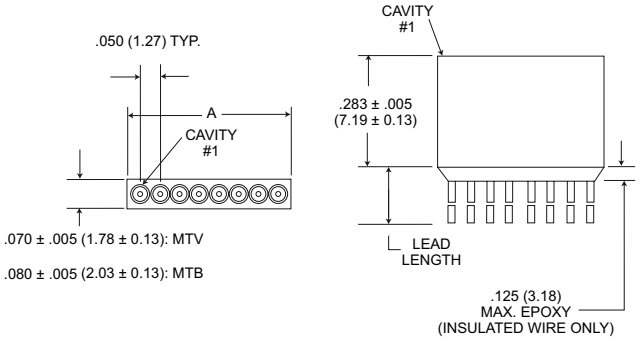


**Plug**

| Part Number By Size | A ±.015 (0.38) | Part Number By Size | A ±.015 (0.38) | Part Number By Size | A ±.015 (0.38) | Part Number By Size | A ±.015 (0.38) | Part Number By Size | A ±.015 (0.38) | Part Number By Size | A ±.015 (0.38) |
|---|---|---|---|---|---|---|---|---|---|---|---|
| MT*1-1** | .070 (1.78) | MT*1-21** | 1.070 (27.18) | MT*1-41** | 2.070 (52.58) | MT*1-61** | 3.070 (77.98) | MT*1-81** | 4.070 (103.38) | MT*1-101** | 5.070 (128.78) |
| MT*1-2** | .120 (3.05) | MT*1-22** | 1.120 (28.45) | MT*1-42** | 2.120 (53.85) | MT*1-62** | 3.120 (79.25) | MT*1-82** | 4.120 (104.65) | MT*1-102** | 5.120 (130.05) |
| MT*1-3** | .170 (4.32) | MT*1-23** | 1.170 (29.72) | MT*1-43** | 2.170 (55.12) | MT*1-63** | 3.170 (80.52) | MT*1-83** | 4.170 (105.92) | MT*1-103** | 5.170 (131.32) |
| MT*1-4** | .220 (5.59) | MT*1-24** | 1.220 (30.99) | MT*1-44** | 2.220 (56.39) | MT*1-64** | 3.220 (81.79) | MT*1-84** | 4.220 (107.19) | MT*1-104** | 5.220 (132.59) |
| MT*1-5** | .270 (6.85) | MT*1-25** | 1.270 (32.36) | MT*1-45** | 2.270 (57.66) | MT*1-65** | 3.270 (83.06) | MT*1-85** | 4.270 (108.46) | MT*1-105** | 5.270 (133.86) |
| MT*1-6** | .320 (8.13) | MT*1-26** | 1.320 (33.53) | MT*1-46** | 2.320 (58.93) | MT*1-66** | 3.320 (84.33) | MT*1-86** | 4.320 (109.73) | MT*1-106** | 5.320 (135.13) |
| MT*1-7** | .370 (9.40) | MT*1-27** | 1.370 (34.80) | MT*1-47** | 2.370 (60.20) | MT*1-67** | 3.370 (85.60) | MT*1-87** | 4.370 (111.00) | MT*1-107** | 5.370 (136.40) |
| MT*1-8** | .420 (10.67) | MT*1-28** | 1.420 (36.07) | MT*1-48** | 2.420 (61.47) | MT*1-68** | 3.420 (86.87) | MT*1-88** | 4.420 (112.27) | MT*1-108** | 5.420 (137.67) |
| MT*1-9** | .470 (11.94) | MT*1-29** | 1.470 (37.34) | MT*1-49** | 2.470 (62.74) | MT*1-69** | 3.470 (88.14) | MT*1-89** | 4.470 (113.54) | MT*1-109** | 5.470 (138.94) |
| MT*1-10** | .520 (13.60) | MT*1-30** | 1.520 (38.61) | MT*1-50** | 2.520 (64.01) | MT*1-70** | 3.520 (89.41) | MT*1-90** | 4.520 (114.81) | MT*1-110** | 5.520 (140.21) |
| MT*1-11** | .570 (14.48) | MT*1-31** | 1.570 (39.88) | MT*1-51** | 2.570 (65.28) | MT*1-71** | 3.570 (90.68) | MT*1-91** | 4.570 (116.08) | MT*1-111** | 5.570 (141.48) |
| MT*1-12** | .620 (15.75) | MT*1-32** | 1.620 (41.15) | MT*1-52** | 2.620 (66.55) | MT*1-72** | 3.620 (91.95) | MT*1-92** | 4.620 (117.35) | MT*1-112** | 5.620 (142.75) |
| MT*1-13** | .670 (17.02) | MT*1-33** | 1.670 (42.42) | MT*1-53** | 2.670 (67.82) | MT*1-73** | 3.670 (93.22) | MT*1-93** | 4.670 (118.62) | MT*1-113** | 5.670 (144.02) |
| MT*1-14** | .720 (18.29) | MT*1-34** | 1.720 (43.69) | MT*1-54** | 2.720 (69.09) | MT*1-74** | 3.720 (94.49) | MT*1-94** | 4.720 (119.89) | MT*1-114** | 5.720 (145.29) |
| MT*1-15** | .770 (19.56) | MT*1-35** | 1.770 (44.96) | MT*1-55** | 2.770 (70.36) | MT*1-75** | 3.770 (95.76) | MT*1-95** | 4.770 (121.16) | MT*1-115** | 5.770 (146.56) |
| MT*1-16** | .820 (20.83) | MT*1-36** | 1.820 (46.23) | MT*1-56** | 2.820 (71.63) | MT*1-76** | 3.820 (97.03) | MT*1-96** | 4.820 (122.43) | MT*1-116** | 5.820 (147.83) |
| MT*1-17** | .870 (22.10) | MT*1-37** | 1.870 (47.50) | MT*1-57** | 2.870 (72.90) | MT*1-77** | 3.870 (98.30) | MT*1-97** | 4.870 (123.70) | MT*1-117** | 5.870 (149.10) |
| MT*1-18** | .920 (23.37) | MT*1-38** | 1.920 (48.77) | MT*1-58** | 2.920 (74.17) | MT*1-78** | 3.920 (99.57) | MT*1-98** | 4.920 (124.97) | MT*1-118** | 5.920 (150.37) |
| MT*1-19** | .970 (24.64) | MT*1-39** | 1.970 (50.04) | MT*1-59** | 2.970 (75.44) | MT*1-79** | 3.970 (100.84) | MT*1-99** | 4.970 (126.24) | MT*1-119** | 5.970 (151.64) |
| MT*1-20** | 1.020 (25.91) | MT*1-40** | 2.020 (51.31) | MT*1-60** | 3.020 (76.71) | MT*1-80** | 4.020 (102.11) | MT*1-100* | 5.020 (127.50) | MT*1-120** | 6.020 (152.91) |

*For jackpost, add letter "P" or "M7" for sizes 9-51, "M17" for size 100.

## MTB2 and MTV2 - .100 (2.54) Contact Centers

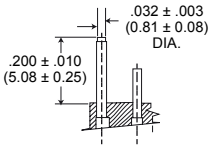


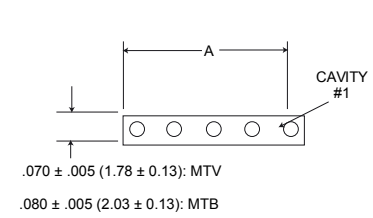


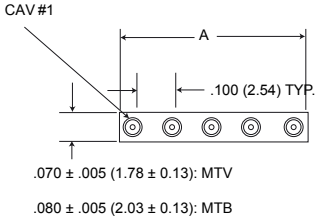


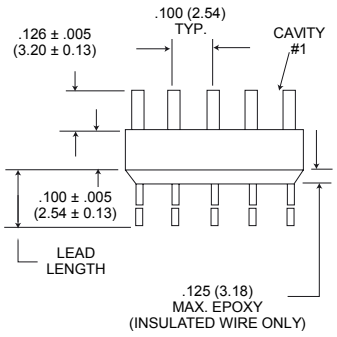


**Receptacle**

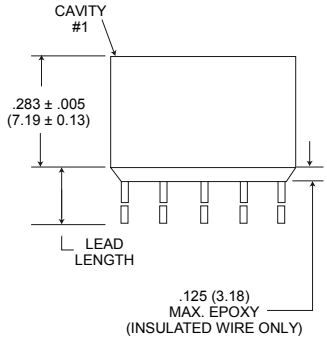


**Plug**

| Part Number By Size | A ±.015 (0.38) | Part Number By Size | A ±.015 (0.38) |
|---|---|---|---|
| MT*2-1** | .070 (1.78) | MT*2-31** | 3.070 (77.98) |
| MT*2-2** | .170 (4.32) | MT*2-32** | 3.170 (80.52) |
| MT*2-3** | .270 (6.86) | MT*2-33** | 3.270 (83.06) |
| MT*2-4** | .370 (9.40) | MT*2-34** | 3.370 (85.60) |
| MT*2-5** | .470 (11.94) | MT*2-35** | 3.470 (88.14) |
| MT*2-6** | .570 (14.48) | MT*2-36** | 3.570 (90.68) |
| MT*2-7** | .670 (17.02) | MT*2-37** | 3.670 (93.22) |
| MT*2-8** | .770 (19.56) | MT*2-38** | 3.770 (95.76) |
| MT*2-9** | .870 (22.10) | MT*2-39** | 3.870 (98.30) |
| MT*2-10** | .970 (24.64) | MT*2-40** | 3.970 (100.84) |
| MT*2-11** | 1.070 (27.18) | MT*2-41** | 4.070 (103.38) |
| MT*2-12** | 1.170 (29.72) | MT*2-42** | 4.170 (105.92) |
| MT*2-13** | 1.270 (32.26) | MT*2-43** | 4.270 (108.46) |
| MT*2-14** | 1.370 (34.80) | MT*2-44** | 4.370 (111.00) |
| MT*2-15** | 1.470 (37.34) | MT*2-45** | 4.470 (113.54) |
| MT*2-16** | 1.570 (39.88) | MT*2-46** | 4.570 (116.08) |
| MT*2-17** | 1.670 (42.42) | MT*2-47** | 4.670 (118.62) |
| MT*2-18** | 1.770 (44.96) | MT*2-48** | 4.770 (121.16) |
| MT*2-19** | 1.870 (47.50) | MT*2-49** | 4.870 (123.70) |
| MT*2-20** | 1.970 (50.04) | MT*2-50** | 4.970 (126.24) |
| MT*2*21** | 2.070 (52.58) | MT*2*51** | 5.070 (128.78) |
| MT*2-22** | 2.170 (55.12) | MT*2-52** | 5.170 (131.32) |
| MT*2-23** | 2.270 (57.66) | MT*2-53** | 5.270 (133.86) |
| MT*2-24** | 2.370 (60.20) | MT*2-54** | 5.370 (136.40) |
| MT*2-25** | 2.470 (62.74) | MT*2-55** | 5.470 (138.94) |
| MT*2-26** | 2.570 (65.28) | MT*2-56** | 5.570 (141.48) |
| MT*2-27** | 2.670 (67.82) | MT*2-57** | 5.670 (144.02) |
| MT*2-28** | 2.770 (70.36) | MT*2-58** | 5.770 (146.56) |
| MT*2-29** | 2.870 (72.90) | MT*2-59** | 5.870 (149.10) |
| MT*2-30** | 2.970 (75.44) | MT*2-60** | 5.970 (151.64) |

Dimensions shown in ( ) are in mm
Specifications and dimensions subject to change

# Micro Edgeboard - .050" Contact Spacing MEB

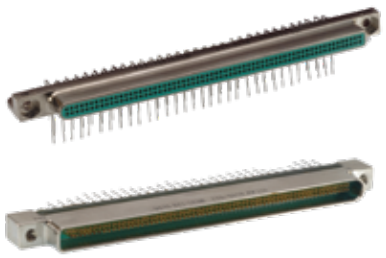

Cannon's Micro Edgeboard (MEB) Connector Series incorporates the proven Micro-Pin / Micro-Socket contact, which features an outstanding record of reliability and performance. Our MEB features machined aluminum shells for ruggedness, diallyl phthalate insulator for top electrical performance and a 36-position polarization key system to prevent cross plugging. Contacts are on .050 (1.27) center spacing. Termination types include 90° or right angle pigtails for multi-layered PC boards and "coke bottle" termination for double-sided PC boards. Harnessing capability is available for both pin and socket sides. The MEB, including the SBR 90° or right angle variation available for multi-layer boards, can be mounted on the female (daughter) side of double or single-sided PC boards. The mating male (mother) board side can have the terminations formed to meet the application demands. Conforms to MIL-C-55302/120 thru 123 (not qualified).

## Specifications

| Material and Finishes | |
|---|---|
| Shell | 6061-T6 Aluminum Alloy per QQ-A-200/8 or QQ-A-225/8, electroless nickel per SAE AMS-C-26074, Class 4, except .0010 to .0015 (0.03 to 0.04) thick or conversion coating per MIL-C-5541, Class 3, color gold. |
| Contact, Pin and Socket: | Copper Alloy, 50 microinch gold per ASTM B488, Type II, Code C, Class 1.25 |
| Jackscrew/Jackpost: | 303 stainless steel, passivated per QQ-P-35. |
| Insulator: | Glass-filled diallyl phthalate per MIL-M-14, Type SDG-F, color green Polyester per MIL-M-24519, Type GPT-30F, color black available for MEB-128 upon request. |

| Termination Types |
|---|
| Consult factory for stranded wie lead modifications codes. |

| Mechanical Features | |
|---|---|
| Size or Length: | 2 sizes |
| Coupling: | Friction/Jackscrew |
| Polarization: | Shells, polarizing keys (36 positions) |
| Contact Spacing Centers: | .050 (1.27) |
| Polarization | Keyways |
| Shell Styles: | Plug and receptacle |

## How to Order

| R | MEB | 1 | - | 128 | P | * | ** | *** |
|---|---|---|---|---|---|---|---|---|

**RoHS Compliant**
**Series Prefix**
**Contact Spacing**
**Layout**
**Contact Type**
**Termination Modification**
**Lead Length**
**Other Modifications**

**Series Prefix**
MEB - Micro edgeboard, plug with twist pin contacts or recept. with microsocket contacts.

**Contact Spacing**
1 - .050 (1.27) centers 128/184
2 - .100 (2.54) centers 64/92 (alternate contact holes)

**Layout**
64, 92, 128, 184

**Contact Type**
P - Pin
S - Socket

**Termination Modifications**
L - Uninsulated solid wire
H - Insulated stranded round harness wire
S - Solder pots
BR - PC board right angle, socket side only

**Lead Length**
Consult factory for wire lead modification codes.

**Other Modifications**
Consult factory

RoHS COMPLIANT PART NUMBERS

ITT

Dimensions shown in ( ) are in mm
Specifications and dimensions subject to change

# Micro Edgeboard - .050" Contact Spacing



## Plug (Mother Board)

MEB-128P

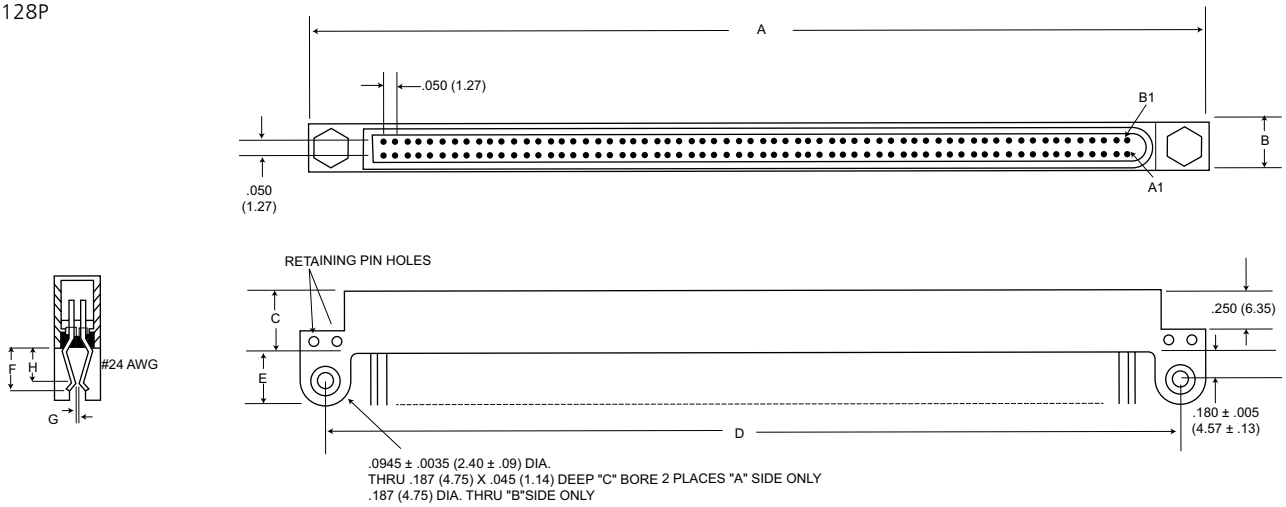


| Part No. | Weight oz. (gm.) Max. | A ±.015 (0.38) | B ±.010 (0.25) | C ±.010 (0.25) | D ±.010 (0.25) | E ±.010 (0.25) | F Max. | G* Max. | H ±.020 (0.51) |
|---|---|---|---|---|---|---|---|---|---|
| 128P | .5 (14.17) | 3.950 (100.33) | .250 (6.35) | .400 (10.16) | 3.700 (93.98) | .300 (7.62) | .280 (7.11) | .030 (0.76) | .200 (5.08) |
| 128PBR | .5 (14.17) | | | | | | | | |

*Will accept up to .093 (2.36) thick P.C. Board with shell modifications.

## Receptacle (Daughter Board)

MEB1-12BS

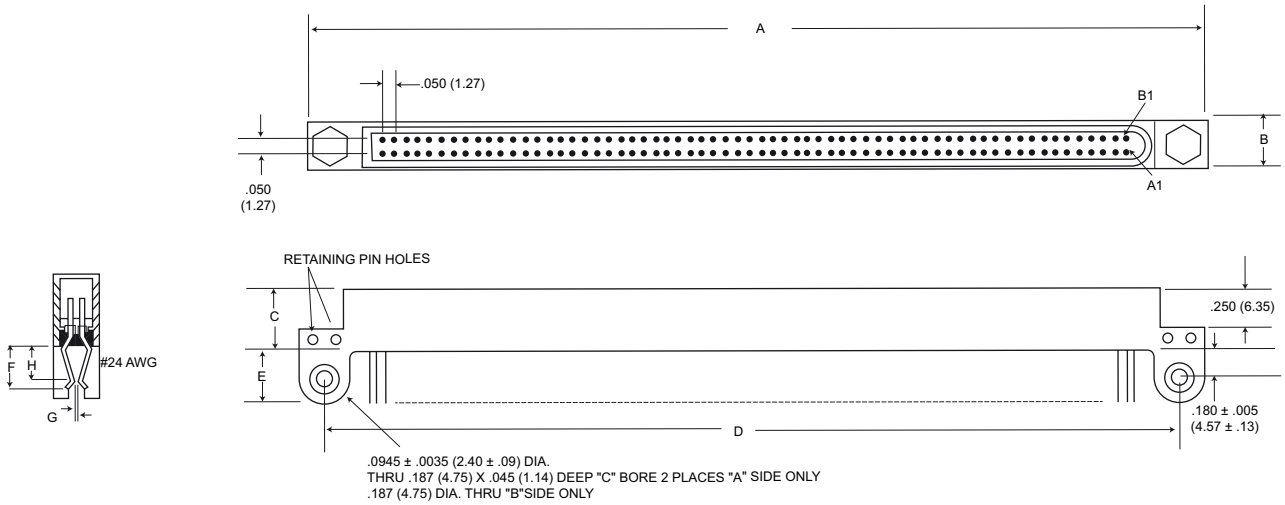


| Part No. | Weight oz. (gm.) Max. | A ±.015 (0.38) | B ±.010 (0.25) | C ±.010 (0.25) | D ±.010 (0.25) | E ±.010 (0.25) | F Max. | G* Max. | H ±.020 (0.51) |
|---|---|---|---|---|---|---|---|---|---|
| 128S | .5 (14.17) | 3.950 (100.33) | .250 (6.35) | .400 (10.16) | 3.700 (93.98) | .300 (7.62) | .280 (7.11) | .030 (0.76) | .200 (5.08) |
| 128SBR | .5 (14.17) | | | | | | | | |

*Will accept up to .093 (2.36) thick P.C. Board with shell modifications.

Dimensions shown in ( ) are in mm
Specifications and dimensions subject to change

# Micro Edgeboard - .050" Contact Spacing MEB

## Plug (Mother Board)

MEB1-184P

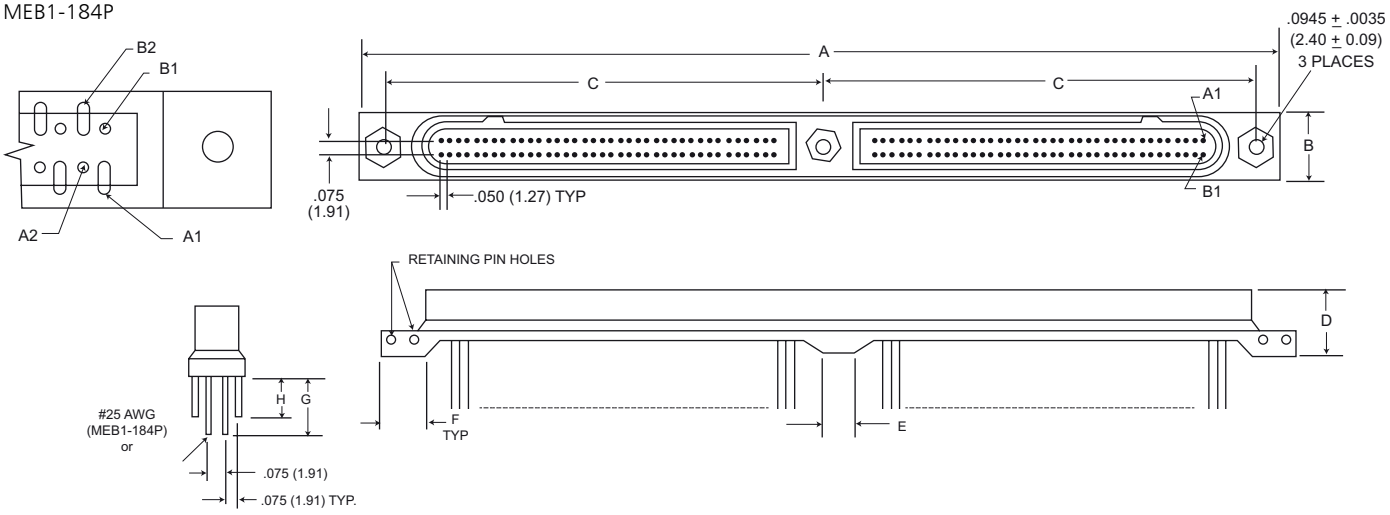


| Part No. | Weight oz. (gm.) Max. | A ±.015 (0.38) | B ±.010 (0.25) | C ±.005 (0.13) | D ±.010 (0.25) | E ±.010 (0.25) | F ±.010 (0.25) | G* ±.010 (0.25 | H ±.025 (0.64) |
|---|---|---|---|---|---|---|---|---|---|
| 184P | 1.0 (28.35) | 5.800 (147.32) | .343 (8.71) | 2.775 (70.49) | .400 (10.16) | .250 (6.35) | .280 (7.11) | .350 (8.89) | .275 (6.99) |

*Will accept up to .093 (2.36) thick P.C. Board with shell modifications.

## Receptacle (Daughter Board)

MEB1-184S

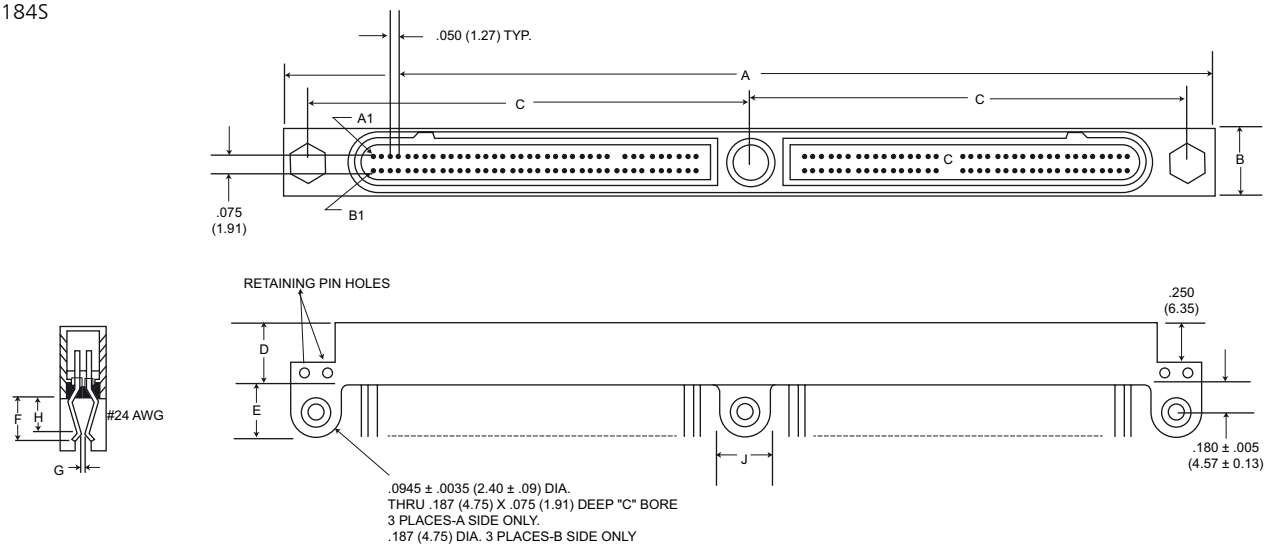


| Part No. | Weight oz. (gm.) Max. | A ±.015 (0.38) | B ±.010 (0.25) | C ±.005 (0.13) | D ±.010 (0.25) | E ±.010 (0.25) | F Max. | G* Max. | H ±.020 (0.51) | H ±.010 (0.25) |
|---|---|---|---|---|---|---|---|---|---|---|
| 184S | 1.0 (28.35) | 5.800 (147.32) | .343 (8.71) | 2.775 (70.49) | .400 (10.16) | .300 (7.62) | .280 (7.11) | .030 (0.76) | .200 (5.08) | .250 (6.35) |
| 184SBR | 1.0 (28.35) | | | | | | | | | |

All round pigtail #25 AWG wire termination designs available for the MEB1-12B receptacle will apply on the MEB1-184 series also.
*Will accept up to .093 (2.36) thick P.C. Board with shell modifications.

# Micro Edgeboard - .050" Contact Spacing

## PC Board Right Angle

MEB1-128SBR

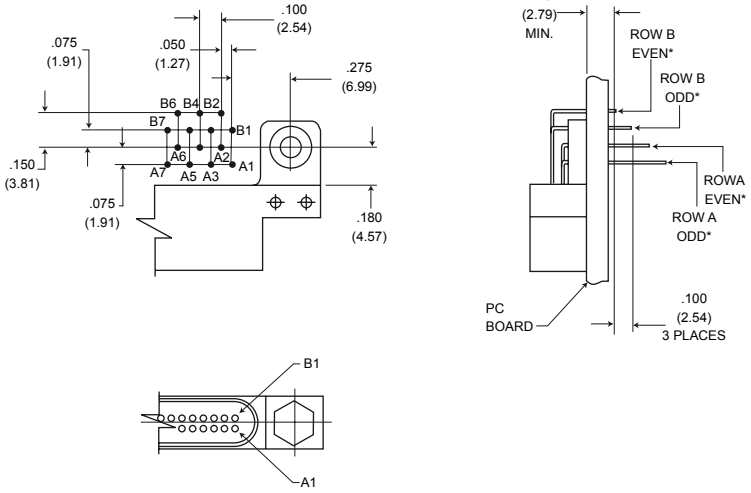


## Keying Accessory - Key and Retaining Pin

Polarizing Hardware Kit

MEB-128-P/N 320-9514-003

MEB-184-P/N 320-9514-002

Contains 2 polarizing keys and 4 spiral pins.

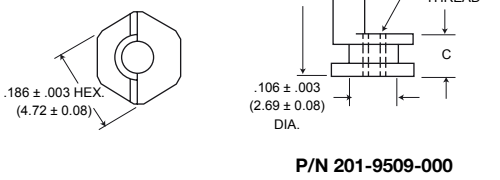


**P/N 201-9509-000**

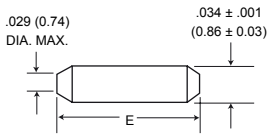


**MEB-184**
**P/N 980-0004-129**

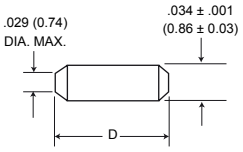


**MEB-128**
**P/N 980-0003-879**

Dimensions shown in ( ) are in mm

Specifications and dimensions subject to change

# Micro Edgeboard - .050" Contact Spacing

## Jackscrew/Jackpost Assembly (MEB 64 & 128 Sizes Only)

**Jackpost Kit**

MEB plug or receptacle-P/N 320-9514-001
Contains 2 bushings and 4 spirals pins

**Jackscrew**

MEB plug-P/N 320-9521-001
MEB receptacle-P/N 320-9521-000
Contains 2 jackscrew assemblies

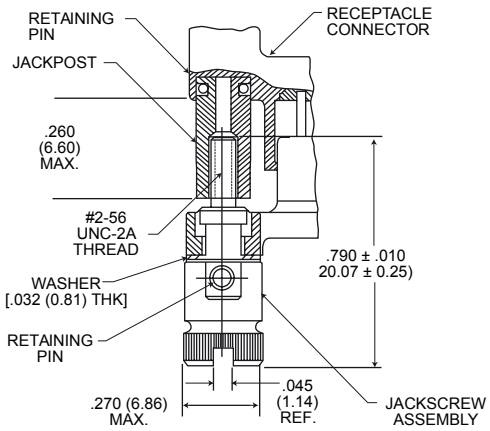


**Plug with Jackscrew**

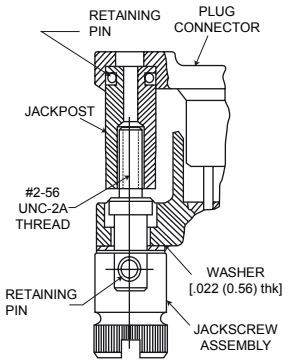


**Receptacle with Jackscrew**

## Special Variations

Alternative Receptacle Configuration

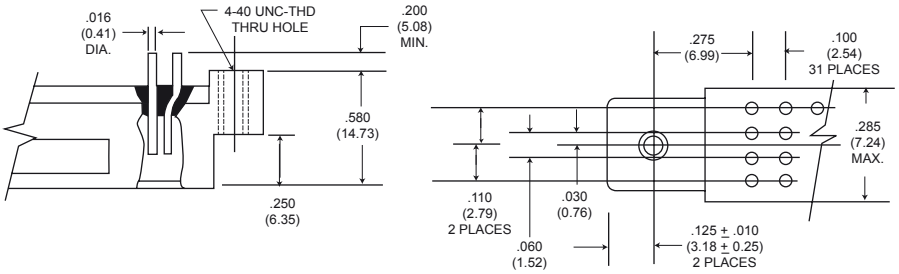

# Cable Assemblies

## Turnkey & Custom Cable Solutions for Cannon Microminiature Connectors

We provide complete turnkey and custom cable assemblies across our expansive portfolio of Microminiature Connectors. Our proven, harsh environment interconnects and cable assemblies are used in the most demanding applications and environments including Aerospace, Defense Electronics, Geophysical Exploration, Oil & Gas, High-Speed Computer Networking, Industrial Automation, Medical Electronics, Satellite and Space Communications and Telecommunications.

Our cable assembly expertise and innovative Six Sigma-driven manufacturing processes enable the design and manufacturing of tight pitch cable assemblies in 0.100, 0.075, 0.050 and 0.025 contact spacing, among many others.

**For more details, contact your Cannon Account Representative.**



### Microminiature Cabling Solutions

- Dynamic Custom Cable Assemblies for Harsh Environments
- Custom Micro-D and MIL-DTL-83513 Interconnect Cable Assemblies
- Space Grade Micro Interconnect Cable Assemblies
- High Temperature Harsh Environment Interconnect Assemblies
- Medical Electronics Cable Assemblies

Dimensions shown in ( ) are in mm
Specifications and dimensions subject to change

# Flex Circuit Cable Assembly

## Terminating to Flexible Circuits

For a low profile finish, it is best to terminate flexible circuits in line with the contacts. Since most Microminiature Connectors have contacts set into two or three rows, termination is generally an easy process.

- The diagrams below provide guidance for pad arrangements to suit MDM Microminiature Connectors, ensuring the circuits are inserted into the potting correctly and accurately.
- The length of the pad is optional but it is important to provide enough cover-lay, especially at the edges of the circuit, to avoid delamination. We suggest at least 0,51 mm (.020 inches). Our standard potting shrouds provide support to the circuit with a dimension of 7,00 mm (.275 inches) from the rear of the flange.

Please consult Customer Service for specific flex circuit assembly design considerations and requirements.

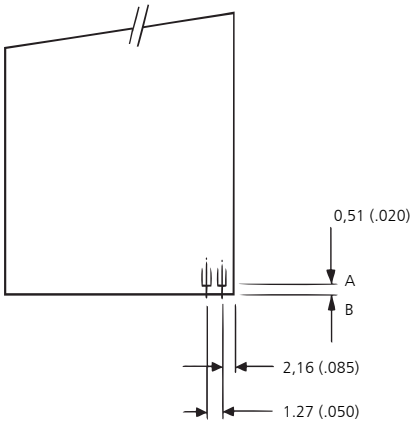


**Diagram 1** shows details of the pad spacing and the suggested amount of material to be left between the end of the pad A and the edge of the flex B.

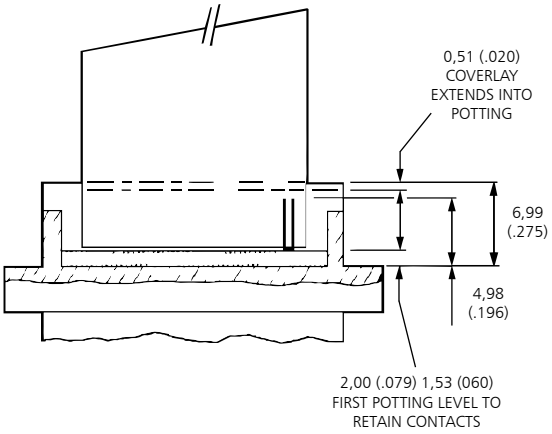


**Diagram 2** illustrates how the connector is prepared with short pigtails and a special first pot which just captures the contacts. The final back potting for strength is controlled by our standard 7,00 (.275) potting fixtures.





# Custom Backshells for Microminiature Connectors

ITT Cannon offers a wide range of backshell solutions for Microminiature Connectors used in harsh environment applications. Although we do not offer a standard backshell portfolio, Cannon engineers can design and manufacture a range of back fittings for our MDM Series Microminiature Connectors, depending on customer requirements. We offer custom designs using proven banded systems in which the braid is captivated over a chimney-style outlet. These types of backshell systems are aviable in different material finishes and sizes and can be provided with special process termination methods. In addition, ITT Cannon engineers have developed a method of riveting the back fitting to the shell within the jacking area. This option guarantees 360-degree shielding effectiveness even when jackscrews or jacking posts are not being used. When a conduit system is preferred, such as for test box environments in field locations, back fittings and a fully screened weatherproof convoluted trunking can be used. Our engineering team can also provide special back potting style termination systems for environmental protection and strain relief. These backshell style systems are typically filled with epoxy or other encapsulating materials to provide a robust and effective solution.

## Sealing Gaskets

We have received requests for gasket materials to seal the MDM connectors into various enclosures. We recommend that you consider wider flanged connectors together with a low cost conductive gasket to provide an adequate surface area. This combination will give you IP-66 sealing with good EMC compliance. The following dimensions for gaskets and flange dimensions are regarded as the minimum that you should consider.

Conductive elastomers generally offer a superior shielding performance when compared with alternatives as in table below.

| Gasket Type | Neoprene (wire impregnated) | Silicone (wire impregnated) | Silicone (oriented wire) | Neoprene (fabric wrap) | Metallic finger stock | Metallic fibres | Conductive silicone rubber |
|---|---|---|---|---|---|---|---|
| Shielding performance | S | S | G | G | G | G | G |
| Temperature range | S | G | G | S | G | G | G |
| IP sealing | P | P | S | S | P | P | G |
| Compression force | G | G | G | G | G | S | S |
| Compression range | S | S | S | G | G | P | S |
| Surface texture | P | P | G | P | G | P | S |
| Compression set | S | S | S | S | G | P | G |
| Re-usability | S | S | S | S | G | P | G |

*Neoprene is a trademark of Dupont  P = Poor  S = Satisfactory  G = Good

Conductive rubber gaskets can be loaded with many different metallic fillers but the choice of material is dependent upon a number of factors such as level of conductivity, shielding effectiveness, galvanic compatibility and cost.

Galvanic Corrosion can occur when two dissimilar metals are in contact with one another in the presence of an electrolyte. The type of gasket material has to be assessed because of the use of metallic fillers. Many applications are dry indoor environments where corrosion is not a major concern. However, for external use, particularly marine, it is recommended that consideration be given to compatibility. The table on the next page is a summary.

| Enclosure Material | Silver/Nickel | Silver/Copper | Silver/aluminum | Inert aluminum | Silver/Glass | Silver | Nickel/Graphit | Nickel |
|---|---|---|---|---|---|---|---|---|
| Aluminum alloys | X | X | 1 | ▲ | X | X | 1 | 1 |
| Magnesium alloys | X | X | 1 | 1 | X | X | 1 | 1 |
| Stainless steel | ▲ | ▲ | ▲ | ▲ | ▲ | ▲ | ▲ | ▲ |
| Copper alloys | ▲ | ▲ | ▲ | ▲ | ▲ | ▲ | ▲ | ▲ |
| Cadmium plating | X | X | 1 | 1 | X | X | 1 | 1 |
| Tin plating | 1 | X | 1 | | 1 | 1 | ▲ | ▲ |
| Nickel plating | ▲ | 1 | 1 | ▲ | ▲ | ▲ | ▲ | ▲ |
| Chromium plating | ▲ | ▲ | ▲ | ▲ | ▲ | ▲ | ▲ | ▲ |
| Silver plating | ▲ | ▲ | ▲ | ▲ | ▲ | ▲ | ▲ | ▲ |
| Zinc & galvanise plating | X | X | 1 | 1 | X | X | 1 | 1 |
| Titanium | ▲ | ▲ | ▲ | ▲ | ▲ | ▲ | ▲ | ▲ |

▲ = good  1 = Satisfactory  X = Not recommended

Dimensions shown in ( ) are in mm
Specifications and dimensions subject to change

# Appendix

## "L" Code Chart

| SORTED BY LENGTH | | |
|---|---|---|
| Wire Length, IN. | | |
| Decimal | Fraction | Code |
| 0.080 | | L63 |
| 0.094 | 3/32 | L62 |
| 0.110 | | L65 |
| 0.125 | 1/8 | L61 |
| 0.140 | | L67 |
| 0.150 | | L56 |
| 0.171 | | L66 |
| 0.187 | 3/16 | L17 |
| 0.190 | | L57 |
| 0.210 | | L59 |
| 0.250 | 1/4 | L39 |
| 0.312 | 3/8 | L60 |
| 0.375 | 3/8 | L58 |
| 0.380 | | L64 |
| 0.500 | 1/2 | L1 |
| 0.625 | 5/8 | L12 |
| 0.750 | 3/4 | L4 |
| 1.000 | | L2 |
| 1.500 | | L7 |
| 2.000 | | L6 |
| 2.250 | | L25 |
| 2.500 | | L16 |
| 3.000 | | L10 |
| 3.500 | | L15 |
| 4.000 | | L11 |
| 4.500 | | L28 |
| 5.000 | | L9 |
| 6.000 | | L3 |
| 7.000 | | L8 |
| 8.000 | | L18 |
| 9.000 | | L45 |
| 10.000 | | L13 |
| 11.500 | | L52 |
| 12.000 | | L4 |
| 15.000 | | L46 |
| 18.000 | | L55 |
| 20.000 | | L5 |

| SORTED BY CODE | | |
|---|---|---|
| Wire Length, IN. | | |
| Code | Decimal | Fraction |
| L1 | 0.500 | 1/2 |
| L2 1 | .000 | |
| L3 | 6.000 | |
| L4 | 12.000 | |
| L5 | 20.000 | |
| L6 | 2.000 | |
| L7 | 1.500 | |
| L8 | 7.000 | |
| L9 | 5.000 | |
| L10 | 3.000 | |
| L11 | 4.000 | |
| L12 | 0.625 | 5/8 |
| L13 | 10.000 | |
| L14 | 0.750 | 3/4 |
| L15 | 3.500 | |
| L16 | 2.500 | |
| L17 | 0.187 | 3/16 |
| L18 | 8.000 | |
| L25 | 2.250 | |
| L28 | .500 | |
| L39 | 0.250 | 1/4 |
| L45 | 9.000 | |
| L46 | 15.000 | |
| L52 | 11.500 | |
| L55 | 18.000 | |
| L56 | 0.150 | |
| L57 | 0.190 | |
| L58 | 0.375 | 3/8 |
| L59 | 0.210 | |
| L60 | 0.312 | 5/16 |
| L61 | .0125 | 1/8 |
| L62 | 0.094 | 3/32 |
| L63 | 0.080 | |
| L64 | 0.380 | |
| L65 | 0.110 | |
| L66 | 0.171 | |
| L67 | 0.140 | |

#25AWG, SOLID COPPER WIRE PER QQ-W-343, TYPE "S", GOLD PLATED PER MIL-G-45204, TYPE II GRADE C OR D, CLASS 1 (50 MICROINCHES MINIMUM)

Nano "L" Code Charts on page 86.

# Appendix

## "H" Code Charts

### 16878/4

Wire, Electrical, Polyetrafluorethylene (PTFE) Insulated, 200 Degrees C, 600 Volts, Extruded Insulation

| Length | Yellow | White | System 1 |
|---|---|---|---|
| 1 | 030 | C30 | A30 |
| 2 | 024 | C24 | A24 |
| 3 | 020 | C20 | 027 |
| 4 | – | C33 | 033 |
| 5 | 031 | C31 | A31 |
| 6 | 019 | 047 | 016 |
| 8 | 026 | C26 | 034 |
| 9 | 015 | C15 | A15 |
| 10 | 029 | C29 | 025 |
| 12 | 028 | 008 | 002 |
| 16 | 039 | C39 | A39 |
| 17 | 036 | C36 | A36 |
| 18 | 001 | 044 | 003 |
| 20 | 038 | C38 | 023 |
| 21 | 055 | C55 | A55 |
| 24 | 009 | 045 | 004 |
| 30 | 010 | C10 | 005 |
| 35 | 018 | C18 | A18 |
| 36 | 011 | 058 | 006 |
| 40 | 037 | C37 | A37 |
| 42 | 012 | 021 | A12 |
| 48 | 013 | C13 | 048 |
| 50 | 040 | C40 | A40 |
| 60 | 014 | C14 | 056 |
| 72 | 017 | 059 | 046 |
| 80 | 032 | C32 | A32 |
| 92 | 022 | C22 | A22 |
| 96 | 035 | C35 | A35 |
| 120 | 042 | C42 | 041 |
| 180 | 043 | C43 | A43 |

### 22759/11-26

Wire, Electrical, Fluoropolymer-Insulated, Extruded TFE, Silver-Coated Copper Conductor, 600 Volt

| Length | White | 10 Color Repeat | System 1 |
|---|---|---|---|
| 1 | G30 | Y30 | H30 |
| 2 | G24 | Y24 | H24 |
| 3 | G20 | Y20 | H20 |
| 4 | G33 | Y33 | H33 |
| 5 | G31 | Y31 | H31 |
| 6 | 065 | Y19 | 072 |
| 8 | G26 | Y26 | H26 |
| 9 | G15 | Y15 | H15 |
| 10 | G29 | Y29 | H29 |
| 12 | 066 | Y28 | 073 |
| 16 | G39 | Y39 | H39 |
| 17 | G36 | Y36 | H36 |
| 18 | 067 | Y01 | 074 |
| 20 | G38 | Y38 | H38 |
| 21 | G55 | Y55 | H55 |
| 24 | 068 | Y09 | 075 |
| 30 | G10 | Y10 | H10 |
| 35 | G18 | Y18 | H18 |
| 36 | 069 | Y11 | 076 |
| 40 | G37 | Y37 | H37 |
| 42 | G12 | Y12 | H12 |
| 48 | 070 | Y13 | 077 |
| 50 | G40 | Y40 | H40 |
| 60 | G14 | Y14 | H14 |
| 72 | 071 | Y17 | 078 |
| 80 | G32 | Y32 | H32 |
| 92 | G22 | Y22 | H22 |
| 96 | G35 | Y35 | H35 |
| 120 | G42 | Y42 | H42 |
| 180 | G43 | Y43 | H43 |

### 22759/33-26

Wire, Electrical, Fluoropolymer-Insulated, Crosslinked Modified, ETFE, Lightweight, Silver-Coated, High-Strength Copper Alloy 200 Degrees C, 600 Volt

| Length | White | 10 Color Repeat | System 1 |
|---|---|---|---|
| 1 | V30 | W30 | X30 |
| 2 | V24 | W24 | X24 |
| 3 | V20 | W20 | X20 |
| 4 | V33 | W33 | X33 |
| 5 | V31 | W31 | X31 |
| 6 | V19 | W19 | X19 |
| 8 | V26 | W26 | X26 |
| 9 | V15 | W15 | X15 |
| 10 | V29 | W29 | X29 |
| 12 | V28 | W28 | X28 |
| 16 | V39 | W39 | X39 |
| 17 | V36 | W36 | X36 |
| 18 | V01 | W01 | X01 |
| 20 | V38 | W38 | X38 |
| 21 | V55 | W55 | X55 |
| 24 | V09 | W09 | X09 |
| 30 | V10 | W10 | X10 |
| 35 | V18 | W18 | X18 |
| 36 | V11 | W11 | X11 |
| 40 | V37 | W37 | X37 |
| 42 | V12 | W12 | X12 |
| 48 | V13 | W13 | X13 |
| 50 | V40 | W40 | X40 |
| 60 | V14 | W14 | X14 |
| 72 | V17 | W17 | X17 |
| 80 | V32 | W32 | X32 |
| 92 | V22 | W22 | X22 |
| 96 | V35 | W35 | X35 |
| 120 | V42 | W42 | X42 |
| 180 | V43 | W43 | X43 |

Nano "H" Code Charts on page 88.

# Appendix

## MIL-STD-681 Wire Color Code

### Reference Data

| PIN No. | MIL-STD-681 No. | Base Color | First Stripe | Second Stripe | Third Stripe |
|---|---|---|---|---|---|
| 1* | 0 | BLK | | | |
| 2* | 1 | BRN | | | |
| 3* | 2 | RED | | | |
| 4* | 3 | ORN | | | |
| 5* | 4 | YEL | | | |
| 6* | 5 | GRN | | | |
| 7* | 6 | BLU | | | |
| 8* | 7 | VIO | | | |
| 9* | 8 | GRY | | | |
| 10* | 9 | WHT | | | |
| 11 | 90 | WHT | BLK | | |
| 12 | 91 | WHT | BRN | | |
| 13 | 92 | WHT | RED | | |
| 14 | 93 | WHT | ORN | | |
| 15 | 94 | WHT | YEL | | |
| 16 | 95 | WHT | GRN | | |
| 17 | 96 | WHT | BLU | | |
| 18 | 97 | WHT | VIO | | |
| 19 | 98 | WHT | GRY | | |
| 20 | 901 | WHT | BLK | BRN | |
| 21 | 902 | WHT | BLK | RED | |
| 22 | 903 | WHT | BLK | ORN | |
| 23 | 904 | WHT | BLK | YEL | |
| 24 | 905 | WHT | BLK | GRN | |
| 25 | 906 | WHT | BLK | BLU | |
| 26 | 907 | WHT | BLK | VIO | |
| 27 | 908 | WHT | BLK | GRY | |
| 28 | 912 | WHT | BRN | RED | |
| 29 | 913 | WHT | BRN | ORN | |
| 30 | 914 | WHT | BRN | YEL | |
| 31 | 915 | WHT | BRN | GRN | |
| 32 | 916 | WHT | BRN | BLU | |
| 33 | 917 | WHT | BRN | VIO | |
| 34 | 918 | WHT | BRN | GRY | |
| 35 | 923 | WHT | RED | ORN | |
| 36 | 924 | WHT | RED | YEL | |
| 37 | 925 | WHT | RED | GRN | |
| 38 | 926 | WHT | RED | BLU | |
| 39 | 927 | WHT | RED | VIO | |
| 40 | 928 | WHT | RED | GRY | |
| 41 | 934 | WHT | ORN | YEL | |
| 42 | 935 | WHT | ORN | GRN | |
| 43 | 936 | WHT | ORN | BLU | |
| 44 | 937 | WHT | ORN | VIO | |
| 45 | 938 | WHT | ORN | GRY | |
| 46 | 945 | WHT | YEL | GRN | |
| 47 | 946 | WHT | YEL | BLU | |
| 48 | 947 | WHT | YEL | VIO | |
| 49 | 948 | WHT | YEL | GRY | |
| 50 | 956 | WHT | GRN | BLU | |

| PIN No. | MIL-STD-681 No. | Base Color | First Stripe | Second Stripe | Third Stripe |
|---|---|---|---|---|---|
| 51 | 957 | WHT | GRN | VIO | |
| 52 | 958 | WHT | GRN | GRY | |
| 53 | 967 | WHT | BLU | VIO | |
| 54 | 968 | WHT | BLU | GRY | |
| 55 | 978 | WHT | VIO | GRY | |
| 56 | 9012 | WHT | BLK | BRN | RED |
| 57 | 9013 | WHT | BLK | BRN | ORN |
| 58 | 9014 | WHT | BLK | BRN | YEL |
| 59 | 9015 | WHT | BLK | BRN | GRN |
| 60 | 9016 | WHT | BLK | BRN | BLU |
| 61 | 9017 | WHT | BLK | BRN | VIO |
| 62 | 9018 | WHT | BLK | BRN | GRY |
| 63 | 9023 | WHT | BLK | RED | ORN |
| 64 | 9024 | WHT | BLK | RED | YEL |
| 65 | 9025 | WHT | BLK | RED | GRN |
| 66 | 9026 | WHT | BLK | RED | BLU |
| 67 | 9027 | WHT | BLK | RED | VIO |
| 68 | 9028 | WHT | BLK | RED | GRY |
| 69 | 9034 | WHT | BLK | ORN | YEL |
| 70 | 9035 | WHT | BLK | ORN | GRN |
| 71 | 9036 | WHT | BLK | ORN | BLU |
| 72 | 9037 | WHT | BLK | ORN | VIO |
| 73 | 9038 | WHT | BLK | ORN | GRY |
| 74 | 9045 | WHT | BLK | YEL | GRN |
| 75 | 9046 | WHT | BLK | YEL | BLU |
| 76 | 9047 | WHT | BLK | YEL | VIO |
| 77 | 9048 | WHT | BLK | YEL | GRY |
| 78 | 9056 | WHT | BLK | GRN | BLU |
| 79 | 9057 | WHT | BLK | GRN | VIO |
| 80 | 9058 | WHT | BLK | GRN | GRY |
| 81 | 9067 | WHT | BLK | BLU | VIO |
| 82 | 9068 | WHT | BLK | BLU | GRY |
| 83 | 9078 | WHT | BLK | VIO | GRY |
| 84 | 9123 | WHT | BRN | RED | ORN |
| 85 | 9124 | WHT | BRN | RED | YEL |
| 86 | 9125 | WHT | BRN | RED | GRN |
| 87 | 9126 | WHT | BRN | RED | BLU |
| 88 | 9127 | WHT | BRN | RED | VIO |
| 89 | 9128 | WHT | BRN | RED | GRY |
| 90 | 9134 | WHT | BRN | ORN | YEL |
| 91 | 9135 | WHT | BRN | ORN | GRN |
| 92 | 9136 | WHT | BRN | ORN | BLU |
| 93 | 9137 | WHT | BRN | ORN | VIO |
| 94 | 9138 | WHT | BRN | ORN | GRY |
| 95 | 9145 | WHT | BRN | YEL | GRN |
| 96 | 9146 | WHT | BRN | YEL | BLU |
| 97 | 9147 | WHT | BRN | YEL | VIO |
| 98 | 9148 | WHT | BRN | YEL | GRY |
| 99 | 9156 | WHT | BRN | GRN | BLU |
| 100 | 9157 | WHT | BRN | GRN | VIO |

*10 colors repeat is the standard wire color code for MIL-DTL-83513 connectors.

# Micro-D Accessories

## Dust Caps

| Arrangement | Anti-Static (Pink) | | Conductive (Black) | |
|---|---|---|---|---|
| | Plug | Receptacle | Plug | Receptacle |
| 9 | 025-9524-000 | 025-9525-000 | 025-9524-003 | 025-9525-003 |
| 15 | 025-9526-000 | 025-9527-000 | 025-9526-003 | 025-9527-003 |
| 21 | 025-9528-000 | 025-9529-000 | 025-9528-003 | 025-9529-003 |
| 25 | 025-9530-000 | 025-9531-000 | 025-9530-004 | 025-9531-003 |
| 31 | 025-9532-000 | 025-9533-000 | 025-9532-003 | 025-9533-003 |
| 37 | 025-9534-000 | 025-9535-000 | 025-9534-003 | 025-9535-003 |
| 51 | 025-0936-000 | 025-9537-000 | 025-9536-004 | 025-9537-003 |
| 69 | 025-9544-000 | 025-9545-000 | 025-9544-003 | 025-9545-003 |
| 100 | 025-9553-000 | 025-9554-000 | 025-9553-003 | 025-9554-002 |

Dimensions shown in ( ) are in mm
Specifications and dimensions subject to change

# About ITT Cannon

ITT is a diversified leading manufacturer of highly engineered critical components and customized technology solutions for the energy, transportation and industrial markets. Building on its heritage of innovation, ITT partners with its customers to deliver enduring solutions to the key industries that underpin our modern way of life. Founded in 1920, ITT is headquartered in White Plains, N.Y., with employees in more than 35 countries and sales in a total of approximately 125 countries. For more information visit itt.com

ITT's Cannon brand offers a product portfolio that remains one of the most extensive in the industry. Continuous investment in technology, research and investment have enabled us to provide new, innovative solutions to markets including:

- Commercial Aerospace
- Military & Defense
- Industrial
- Transportation
- Medical

When you specify an ITT Cannon interconnect solution, you can rely on products designed, developed and manufactured to the highest quality and reliability standards. This tradition of excellence is based on ITT Cannon's corporate culture of operating its businesses under the principles of Six Sigma. At ITT, Six Sigma is not just a quality philosophy but a complete corporate culture that drives the entire business. Our Value Based Management and Value-Based Product Development systems are two cornerstones that allow for the development of both leadership and product engineering principles.

## Six Sigma Manufacturing

ITT Cannon operates manufacturing facilities in the United States, Germany, Italy, Mexico, China and Japan, all of which have particular product area strengths that allow ITT Cannon to offer a truly global presence to our customers. Our facilities are world class and accommodate full vertical integration, utilizing the latest manufacturing technologies including automated and robotic machining centers, Super Market manufacturing cells, Kanban pull systems, and automated electrical, mechanical, and optical test and inspection equipment. The combination of our manufacturing strength and our advanced manufacturing facilities allows ITT Cannon to offer products at market driven prices. Our capabilities, especially in robotics, computerized precision tooling, Kaizen Project Management, Six Sigma tools and testing give ITT the most optimized global manufacturing footprint in the interconnect industry.

## The Custom Difference

As an industry leader in harsh environment interconnect applications, ITT Cannon's world class engineering teams work directly with our customers to design and develop cost-effective solutions for their applications. In many cases we may modify one of our standard designs to ensure a highly reliable solution where timing is critical. When custom connectors are required, we collaborate with clients and partners with a goal to design the most reliable, cost-effective solution possible. Our engineering and product management teams provide a thorough analysis of proposed solutions, ensuring our customers receive the right solution for their program and application needs.

## RoHS Compliance Information

ITT Cannon has implemented a strict parts control plan for all ITT Cannon electronics plants worldwide that allows the Cannon product portfolio to meet the requirements of the European Union Directive 2002/95/EC better known as the Reduction of Hazardous Substances initiative. As appropriate, specific Cannon products may be ordered with an R prefix number which insures our customers will receive RoHS compliant parts for their commercial electronics applications and equipment. Since most RoHS hazardous substances center around specific metal plating and lead solder coatings, ITT Cannon's products for RoHS compliance are available in the following plating finishes: electroless nickel, stainless steel, anodize over aluminum and gold plating. It should be noted that gold plating would be recommended as the replacement for tin-lead solder when ordering board mount connectors.

RoHS COMPLIANT PART NUMBERS

# Product Safety Information

This note must be read in conjunction with the product data sheet/catalog. failure to observe the advice in this information sheet and the operating conditions specified in the product data sheet/ catalog could result in hazardous situations.

## 1. MATERIAL CONTENT AND PHYSICAL FORM

(a) Electrical connectors do not usually contain hazardous materials. They contain conducting and non-conducting materials and can be divided into two groups:
Printed circuit types and low cost audio types which employ all plastic insulators and casings.

(b) Rugged, Fire Barrier and High Reliability types with metal casings and either natural rubber, synthetic rubber, plastic or glass insulating materials. Contact materials vary with type of connector and also application and are usually manufactured from either: Copper, copper alloys, nickel, alumel, chromel or steel. In special applications, other alloys may be specified.

## 2. FIRE CHARACTERISTICS AND ELECTRIC SHOCK HAZARD

There is no fire hazard when the connector is correctly wired and used within the specified parameters.
Incorrect wiring or assembly of the connector or careless use of metal tools or conductive fluids, or transit damage to any of the component parts may cause electric shock or burns. Live circuits must not be broken by separating mated connectors as this may cause arcing, ionization and burning. Heat dissipation is greater at maximum resistance in a circuit. Hot spots may occur when resistance is raised locally by damage, e.g. cracked or deformed contacts, broken strands of wire. Local over- heating may also result from the use of the incorrect application tools or from poor quality soldering or slack screw terminals. Overheating may occur if the ratings in the product Data Sheet/Catalog are exceeded and can cause breakdown of insulation and hence electric shock. If heating is allowed to continue it intensifies by further increasing the local resistance through loss of temper of spring contacts, formation of oxide film on contacts and wires and leakage currents through carbonization of insulation and tracking paths. Fire can then result in the presence of combustible materials and this may release noxious fumes. Overheating may not be visually apparent. Burns may result from touching overheated components.

## 3. HANDLING

Care must be taken to avoid damage to any component parts of electrical connectors during installation and use. Although there are normally no sharp edges, care must be taken when handling certain components to avoid injury to fingers. Electrical connectors may be damaged in transit to the customers, and damage may result in creation of hazards. Products should therefore be examined prior to installation/use and rejected if found to be damaged.

## 4. DISPOSAL

Incineration of certain materials may release noxious or even toxic fumes.

## 5. APPLICATION

Connectors with exposed contacts should not be selected for use on the current supply side of an electrical circuit, because an electric shock could result from touching exposed contacts on an unmated connector. Voltages in excess of 30 V ac or 42.5 V dc are potentially hazardous and care should be taken to ensure that such voltages cannot be transmitted in any way to exposed metal parts of the connector body. The connector and wiring should be checked, before making live, to have no damage to metal parts or insulators, no solder blobs, loose strands, conducting lubricants, swarf or any other undesired conducting particles. Circuit resistance and continuity check should be made to make certain that there are no high resistance joints or spurious conducting paths. Always use the correct application tools as specified in the Data Sheet/Catalog. Do not permit untrained personnel to wire, assemble or tamper with connectors. For operation voltage please see appropriate national regulations.

## IMPORTANT GENERAL INFORMATION

(i) Air and creepage paths/operating voltage. The admissible operating voltages depend on the individual applications and the valid national and other applicable safe- ty regulations.
For this reason the air and creepage path data are only reference values. Observe reduction of air and creepage paths due to PC board and/or harnessing.

(ii) Temperature. All information given are temperature limits.
The operation temperature depends on the individual application.

(iii) Other important information. Cannon continuously endeavors to improve their products. Therefore, Cannon products may deviate from the description, technical data and shape as shown in this catalog and data sheets.

ITT Cannon is a business unit of ITT Cannon Inc., which manufactures the highest quality products available in the marketplace; however these products are intended to be used in accordance with the specifications in this publication. Any use or application that deviates from the stated operating specifications is not recommended and may be unsafe. No information and data contained in this publication shall be construed to create any liability on the part of Cannon. Any new issue of this publication shall automatically invalidate and supersede any and all previous issues

All data subject to change without notice.

Dimensions shown in ( ) are in mm
Specifications and dimensions subject to change

# Notes

cannon

# Amazing things happen when great things connect



**Connect with your ITT Cannon representative today or visit us at ittcannon.com**

# Connect with the experts

ITT's Cannon brand is a world leader in the design and manufacture of highly engineered connector solutions for multiple end markets.

## Why ITT

ITT is a focused multi-industrial company that designs and manufactures highly engineered critical components and customized technology solutions. ITT's Cannon brand is a leading global manufacturer of connector products serving international customers in aerospace, defense, medical, industrial and transportation end markets. ITT's Connector business, which also includes the Veam and BIW Connector Systems brand, manufactures and supplies a variety of connectors and interconnects that make it possible to transfer data, signal and power in an increasingly connected world.

Connect with your ITT Cannon representative today or visit us at ittcannon.com

Follow us


**CHINA - Shenzhen City**
+86.755.2726.7888

**FRANCE**
+33.1.60.04.93.93

**GERMANY - Weinstadt**
+49.7151.699.0

**HONG KONG**
+852.2732.2720

**ITALY - Lainate**
+39.02938721

**JAPAN - Kanagawa**
+81.462.57.2010

**KOREA**
+82.2.702.7111

**MEXICO - Nogales**
+52.631.311.0050

**SHANGHAI**
+ 86.21.2231.2222

**SINGAPORE**
+65 66974205

**UK - Basingstoke**
+44.1256.347400

**USA - Irvine, CA**
+1.800.854.3028



The "ITT Engineered Blocks" symbol, "ITT", "Cannon" and "Veam"are registered trademarks of ITT Inc.
Specification and other data are based on information available at the time of printing, and are subject to change without notice.

© 2024 ITT Inc.


ITT Cannon Microminiature Connectors CAT 09/2024