cannon

Microminiature Connectors Catalog



ITT

ENGINEERED FOR LIFE

cannon

Amazing Things Happen

When Great Things Connect

More than a Century of Connections

ITT Cannon is a leading global manufacturer of interconnect solutions serving international customers in the aerospace and defense, industrial, transportation and medical end markets. Whether delivering critical specs to aircraft pilots, streaming data through communications satellites, or enabling ultrasound equipment to give expectant parents a first look at their unborn child, ITT Cannon connects the world's most important information with those who need it. Since 1915, Cannon products have been used in a history of "firsts." From the first "talking" movie to the first man on the moon, Cannon has set the standard for reliable, harsh environment interconnect solutions. Today we proudly continue our legacy of innovation with a goal to connect the world and inspire the successes of the next century—because amazing things happen when great things connect.

The ITT Cannon Difference

- World-class design, engineering & manufacturing capabilities
- A commitment to quality at every touch point
- Global product reach with local customer service & support
- Unrivaled customization experience
- An innovative & trusted business partner

About ITT

ITT is a diversified leading manufacturer of highly engineered critical components and customized technology solutions for the energy, transportation and industrial markets. Building on its heritage of innovation, ITT partners with its customers to deliver enduring solutions to the key industries that underpin our modern way of life. ITT is headquartered in White Plains, N.Y., with employees in more than 35 countries and sales in approximately 125 countries. For more information, visit ITT.com



ITT

ENGINEERED FOR LIFE



Military & Defense



Commercial Aerospace



Industrial



Transportation



Medical

ITT Cannon's portfolio

of high performance interconnects is one of the most extensive in the industry, offering a wide range of custom and off-the-shelf connectors and cable assemblies for applications in the Commercial Aerospace, Military & Defense, Transporation, Industrial and Medical end markets. For more details, visit ITTCannon.com.

cannon

Microminiature Interconnect Solutions

Ultra lightweight, space-saving connectors and cable assemblies for unmatched performance & reliability in the harshest environments

ITT Cannon is your one-stop source for the design and manufacture of Microminiature solutions for the high performance connector market.

Offering one of the broadest selections of standard and custom Microminiature products available, our versatile portfolio includes a wide range of shell styles and configurations including rectangular, circular, quick disconnect, high speed signal, filter, hermetic, mixed signal packages and strip-style.

Each one features our Cannon-engineered Micro Twist Pin Contact System for maximum performance, as well as unique mechanical engagement and locking mechanisms to ensure reliability in the harshest environments.

Ideally suited for markets and applications that require extremely small, lightweight and reliable interconnects, our Microminiature Connectors feature higher density contact configurations than traditional rectangular solutions—without sacrificing quality or performance.



Key Benefits

- Ultra small, lightweight & high performance form factor
- Available in 8 shell sizes that accommodate from 9 to 100 contacts, plus special power and coaxial contact arrangements
- Exceptional bandwidth performance
- Durability to withstand high shock and vibration
- Unique mechanical engagement & locking mechanisms
- Custom & turnkey cable assemblies
- RoHS compliant part numbers & plating options

Key Features

- Micro Twist Pin Contact System recessed into plug insulators
- Positions: 9, 15, 21, 25, 31, 27, 51, 100
- Wire size: AWG 24 thru AWG 32
- Micro socket: Free standing used in receptacle side
- Current rating: 3A
- Durability: 500 mating cycles
- Contacts: Copper alloy; gold plated
- Low profile configurations available
- Designed to MIL-DTL-83513 specifications
- Operating temperatures:
  Micro MDM Standard: -55°C to +150°C
  High Temp Micro MDM: -55°C to +200°C
  Ultra-High Temp Micro MDM: -55°C to +230°C





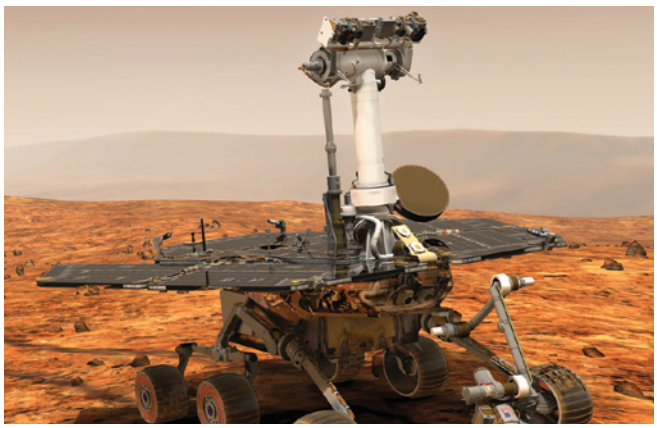

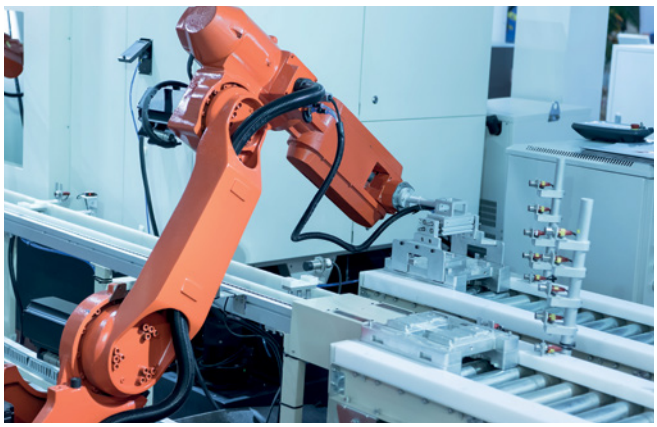

Markets & Applications

From automated space vehicles roving the surface of Mars, to oil & gas exploration in remote locations the world over, ITT Cannon's versatile, high performance Microminiature Connectors transmit data, power and signal when it matters most.

Twist Pin Technology

At the heart of our Microminiature Connector Series is the Twist Pin Contact System, which Cannon engineers first developed & licensed in the 1960s. Highly reliable Twist Pin Technology allows continuity in very dense areas and under severe shock and vibration, requiring low engagement and separation forces. It is superior technology that outperforms traditional machined or stamped electrical contract systems. To read more about this pioneering Cannon technology, please see page 7.

Cable Assemblies

Our extensive expertise in designing and manufacturing Microminiature Connectors translates into our ability to design and deliver both Turnkey and Custom Cable Assemblies. For more information, please see page 76.

Microminiature Product Line

- MDM Micro-D (MIL-DTL-83513)
- MDM PCB (MIL-DTL-83513)
- MDLM Micro-D Metal Shell, Low Profile
- MDM F222 High Temp Micro
- MDM F300 Ultra-High Temp Micro
- MCM C/P Coaxial Power Micro
- MDMH Hermetic Micro
- TMDM Filter Micro
- MD*Plastic Micro-D
- MDB Coaxial Micro
- MJS Micro Center Jacksrew
- MIK Micro Circular
- MIKM Micro Circular
- MIKQ Micro Circular
- MT* Strip-Style
- ME Micro Edgeboard
- Customs & Specials

For more details, see our Product Selection Guide on pp 8-9.

Dimensions shown in mm
Specifications and dimensions subject to change

Table of Contents

Cannon Brand & Portfolio Overview 2-3
Microminiature Interconnect Solutions Overview 4-5
Table of Contents 6
Cannon Twist Pin Contact System 7
Product Selection Guide 8-9
Micro-D Metal Shell - .050" Contact Spacing (MDM) 10-18
Micro-D Coaxial/Power - .050" Contact Spacing (MDM-C/P) 19-20
Micro-D PCB - .050" Contact Spacing (MDM-PCB) 21-24
Micro-D Metal Shell Low Profile - 0.50" Contact Spacing (MDLM) 25-29
200°C High-Temp Micro (MDM-F222) 30-31
230°C Ultra-High Temp Micro (MDM-F300) 32
Accessories 33
Micro-D Metal Shell - .050" Contact Spacing (MIL-DTL-83513) 34-35
Hermetic (MDMH) 36-37
Filter (TMDM) 38-40
Micro-D Plastic Shell - .050" Contact Spacing (MD/MDB/MDB-PCB, MDV) 41-52
Micro Center Jackscrew (MJS) 53-57
Microminiature Circular - .050" Contact Spacing (MIK, MIKM, MIKQ) 58-64
Microstrips .050" Contact Spacing (MT) 65-68
Microminiature Strip - .100/.050" Contact Spacing (MT) 69-70
Micro Edgeboard - .050" Contact Spacing (MEB) 71-75
Cable Assemblies 76
Flex Circuit Cable Assembly 77
Custom Back Shells 78
Appendix
- Standard Wire Termination "L" Code Chart 79
- Standard Wire Termination "H" Code Chart 80
- Wire Color Code Chart 81
- Micro-D Accessories Dust Caps 82

About ITT Cannon 83
Product Safety Information 84
We Connect When It Matters Most 85-86

Cannon Twist Pin Contact System

At the heart of our Microminiature Connector Solutions is Cannon's proven Twist Pin Contact System, which features superior electrical and mechanical technology that outperforms traditional machined or stamped electrical contract systems. Highly reliable twist pin technology allows continuity in very dense areas and under severe shock and vibration, requiring low engagement and separation forces. Termination can consist of uninsulated pigtails or insulated wire all pre-harnessed at our factory to customer specifications. Cannon engineers developed and introduced Twist Pin Contact Technology in the 1960s, and have used it in the Cannon MDM Series Microminiature Connectors for decades. ITT Cannon Cannon's Twist Pin System consists of the Micro Socket and the Micro Pin or Twist Pin.



Advantages of Cannon's Twist Pin Contact System

- Seven points of electrical contact (Micro 0.050 inch interconnect)
- Contact and crimp sleeve materials carefully optimized for extremely reliable crimps; no design tradeoffs
- Seamless crimp sleeves
- Multiple 4-indent wire crimps standard & smaller bore micro socket contacts
- Standard integral tail & thru bundle MicroPin contacts (high density packaging)
- High mating cycles
- High current handling capabilities
- System qualification in numerous aerospace, defense, electronic & high temperature geophysical applications
- Wide array of wire terminations

How It Works: POS-A-Line Contact Alignment*

The flexible Twist Pin is recessed into the insulator and the rigid socket is exposed, reversing the traditional positions of pin and socket. During mating, the socket is guided into the pin insulator by the lead-in chamfer. The pin is kept from flexing beyond the socket capture radius by the walls of the cavity. The hemispherical weld of controlled radius at the tip of the pin combines with the lead-in chamfers of the socket contact and the pin insulator to carn the pin into alignment. By controlling the welding process and the dimensions of the socket contact and the insulators, it is impossible for the recessed pin to escape the socket capture radius.

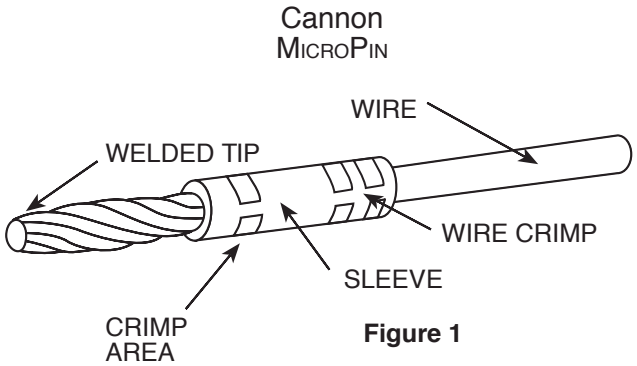

Figure 1

*Figure 1 - The Twist Pin Contact System consists of several stranded cores making up the wire bundle. The strands are subsequently heat treated and a weld is performed on the tip of each contact. Crimp sleeves are then inserted over the contact and crimp areas are defined to produce a seamless crimp system. The Twist Pin Contact System is referred by ITT Cannon as a Pos-A-Line contact alignment system. Our reference to this system identifies that the flexible Twist Pin is recessed into the insulator and the rigid socket is exposed thus reversing the traditional positions of the pin and socket. During the mating sequence, the socket is guided into the pin insulator by the lead-in chamfer. The pin is kept from flexing beyond the socket capture radius by the walls of the cavity. The hemispherical weld of controlled radius at the tip of the pin combines with the lead-in chamfer of the socket contact and the pin insulator to cam the pin in alignment. ITT Cannon has developed a very robust Six Sigma manufacturing process that controls the welding process as well as the dimensions of the socket contact and insulator material. The net result is a contact system that makes it impossible for the recessed pin to escape the socket capture radius.

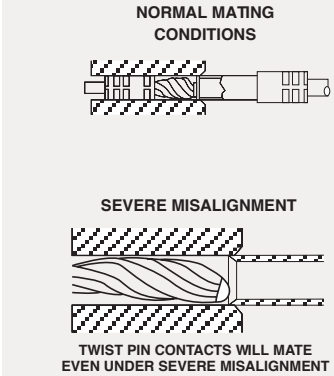

Figure 2

Figure 2 - Illustrates the Twist Pin features, as well as mating & severe misalignment conditions.

Cannon Microminiature Connectors | Product Selection Guide

	MDM	MDM PCB	MDLM	MDM Coaxial/Power Combo	High Temp Micro MDM F222	Ultra-High Temp Micro MDM F300	MIL-DTL-83513	MDMH Hermetics
								
Applications	MDM Connectors are highly reliable, extremely small and lightweight with higher density contact configurations than traditional rectangular connectors.	MDM-PCB Metal Shell High Density Connectors are designed for use with flex circuitry, flat cable and printed circuit boards.	MDLM Connectors offer are ideally suited for harsh environment Aerospace & Defense, Industrial and Transportation applications that require a thinner, lower profile design package.	MDM C/P Connectors have been tooled in several coaxial layouts and offer versatility by combining coaxial and signal lines in the same connector.	MDM F222 High Temp Series is tested to withstand 200°C continuous operating temperature for 500 hours and meets the harsh environment requirements of the Oil and Gas exploration industries.	MDM F300 High Temp Series is tested to withstand 230° continuous operating temperature for 500 hours and meets the harsh environment requirements of the Oil and Gas exploration industries.	MIL-DTL-83513 Connectors provide high density, lightweight, field-proven twist pin contact design used in avionics gear, communications equipment and satellites, as well as medical applications.	Hermetically-sealed MDMH Connectors are designed for applications where a vacuum, inert gas or a constant controlled pressure are required to eliminate adverse effects created by atmospheric changes.
Available Layouts	Plug and Socket	Plug and Socket	Plug and Socket	Plug and Socket	Plug and Socket	Plug and Socket	Plug and Socket	Plug and Socket
Current Rating	3A max.	3A max.	3A max.	3A max.	3A max.	3A max.	3A max.	3A max.
Contact Resistance	8 milliohms max.	8 milliohms max.	8 milliohms max.	8 milliohms max.	8 milliohms max.	8 milliohms max.	8 milliohms max.	24 milliohms max.
Contact Material	gold plated copper alloy	gold plated copper alloy	gold plated copper alloy	gold plated copper alloy	gold plated copper alloy	gold plated copper alloy	gold plated copper alloy	gold plated copper and steel
Shell	Metal	Metal	Metal	Metal	Metal	Metal	Metal	Metal
Shell Material	Aluminum	Aluminum	Aluminum	Aluminum	Steel	Stainless Steel	Aluminum	Steel
Available Layouts	9, 15, 21, 25, 31, 37, 51 & 100	9, 15, 21, 25, 31, 37, 51 & 100	9, 15, 21, 25, 31, 37, 51	7C/P2, 24C/P4, 27C/P5 & 10C/P10	9, 15, 21, 25, 31, 37 & 51	9, 15, 21, 25, 31 & 37	9, 15, 21, 25, 31, 37, 51 & 100	9, 15, 21, 25, 31, 37 & 51
Configuration	Polarized D	Polarized D	Polarized D	Polarized D	Polarized D	Polarized D	Polarized D	Polarized D
RoHS Plating	Available	Available	Available	Available	Not Available	Not Available	Available	Available
Factory Terminated	Yes*	Yes	Yes	Yes	Yes	Yes	Yes	Yes*
Space Applications	Available	Available	Available	Available	Yes	No	Available	Yes

* Solderpot versions available for end user termination

	TMDM Filter	MD**	MJS	MIK	MIKM	MIKQ	MT*	MEB
								
Applications	MDM Filter Connectors are designed for use in commercial avionics and equipment, with increasing emphasis on EMI, RFI and EMP shielding.	MD** Microminiature Connectors are used in applications requiring highly reliable, extremely small, lightweight plastic connectors.	MJS Jackscrew Series provides a reliable interconnect for board-to-board, board-to-cable and cable-to-cable applications.	MIK Micro Circular Series are rugged yet lighweight and meet or exceed the applicable requirements of MIL-DTL-83513. Applications include biomedical, instrumentation and miniature black boxes.	MIKM Micro Circular Series are rugged yet ligh-weight and meet or exceed the applicable requirements of MIL-DTL-83513. Application include biomedical, instrumentation and miniature black boxes.	MIKQ Micro Circular Series are rugged yet lighweight and meet or exceed the applicable requirements of MIL-DTL-83513. Application include biomedical, instrumentation and miniature black boxes.	MT Microstrips pro-vide an extremely dense and reliable interconnection solution in a minimum profile package, offering exceptional board-to-wire application flexibility.	Micro Edgeboard (MEB) Series pro-vides a combination of high density and reliability for applications in airborne and space systems, computers and peripherals, and industrial/ commercial control systems.
Available Layouts	Plug and Socket	Plug and Socket	Plug and Socket	Plug and Socket	Plug and Socket	Plug and Socket	Plug and Socket	Plug and Socket
Current Rating	3A max.	3A max.	3A max.	3A max.	3A max.	3A max.	3A max.	3A max.
Contact Resistance	15 milliohms max.	8 milliohms max.	8 milliohms max.	8 milliohms max.	8 milliohms max.	8 milliohms max.	8 milliohms max.	8 milliohms max.
Contact Material	gold plated copper alloy	gold plated copper alloy	gold plated copper alloy	gold plated copper alloy	gold plated copper alloy	gold plated copper alloy	gold plated copper alloy	gold plated copper alloy
Shell	Metal	Plastic	Plastic	Plastic	Metal	Metal	Plastic	Plastic
Shell Material	Aluminum	Thermoplastic & Thermoset	Thermoplastic & Thermoset	Thermoplastic	Steel	Steel	Thermoplastic	Thermoset
Available Layouts	9, 15, 21, 25, 31, 37 & 51	9, 15, 21, 25, 31, 37 & 51	10, 26, 51 & 66 Rect/ unshrouded 16, 28 & 35 - Rect/shrouded 26, 38, 42 & 76 - Polarized D	7 & 55	7, 55 & 85	7, 19 & 37	MTV - 1 thru 120 MTB - 1 thru 80	64, 128, 92 & 184
Configuration	Polarized D	Polarized D	Rectangular & Polarized D	Circular	Circular	Circular		
RoHS Plating	No	Available	Available	Available	Available	Available	Available	Available
Factory Terminated	Yes	Yes*	Yes*	Yes	Yes	Yes	Yes	Yes
Space Applications	Yes	Available	Available	Yes	Yes	Yes	Yes	Yes

Dimensions shown in mm
Specifications and dimensions subject to change

Micro-D Metal Shell - .050" Contact Spacing MDM

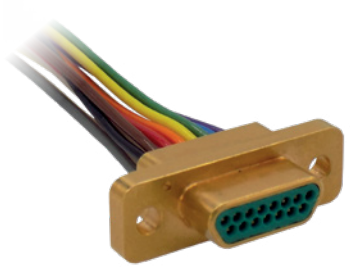

Cannon MDM Series Microminiature Connectors are used in applications requiring highly reliable, extremely small and lightweight solutions with higher density contact configurations. They are available in eight shell sizes that accommodate from 9 to 100 contacts, as well as special arrangements with power and coaxial contacts. Cannon MDM Series Microminiature Connectors employ size 24 Micro-Pin / Micro-Socket Contacts on .050 (1.27) centers in a contact density identical to the standard Micro-D connector series, but with Aluminum shells to increase strength, prevent chipping, cracking or breaking and provide electromagnetic (EMI and RFI shielding. They also feature a silicone elastomer compression interfacial seal to provide a moisture and humidity seal between each contact and between the contacts and shell.

Specifications

STANDARD MATERIALS AND FINISHES

Shell	- 6061-T6 Aluminum alloy per QQ-A-200/8, yellow chromate/cadmium, Type II, Class 3 over electroless nickel per SAE AMS-C-26074, Class 4.
Insulator	- Liquid Crystal Polymer per MIL-M-24519, Type GLCP-30F (9-100) - Glass filled diallyl phthalate per MIL-M-14, Type SDGF (7*2 and 24*4) - Polyphenylene sulfide per MIL-M-24519, Type GST-40F (16*5) - Polyester per MIL-M-24519, Type GPT-30F (10*10)
Contacts	- Copper alloy, gold plate
Mounting Hardware	- 300 Series stainless steel, passivate
Kit, Jackpost (3) items	- 300 Series stainless steel, passivate
Washer	- 400 Series stainless stell, passivate
Standard Epoxy	- Hysol EE4215/HD3561, color black - Hysol EE4198/HD3561, color green - Hysol MG40FS molding compound

MECHANICAL FEATURES

Coupling	- Friction/jackscrews
Polarization	- Keystone-shaped shells
Contact Spacing Centers	- .050 (1.27)
Shell Styles	- Plug and receptacle
No. of Contacts	- 9 thru 100 signal; 5 signal/2 coaxial; 5 signal/2 power; 11 signal/5 coaxial; 11 signal/5 power; 0 signal/10 coaxial; 0 signal/10 power; 20 signal/4 coaxial; 20 signal/4 power
Coaxial Cable	- RG - 178/U
Wire Size	- #24 thru #32 AWG
Contact Termination	- Multiple indent crimp

Performance Data

Test	Method	Criteria of Acceptance
Dielectric Withstanding Voltage	Method 3001: 600 VAC at sea level 150 VAC at 70,00' altitude	No breakdown No breakdown
Insulation Resistance	Method 3003	5,000 megohms minimum
Thermal Shock	Method 1003. Condition A: - 55°C to +125°C	No physical damage
Physical Shock	Method 2004, Condition E: 50 G's, 3 axes, 6 millisecond duration sawtooth pulse	No physical damage No loss of continuity > 1 μsec
Vibration	Method 2005, Condition IV: 20 G's, 10-20,000 Hz. 12 hrs	No physical damage No loss of continuity > 1 μsec
Durability	500 cycles of mating and unmating, 500 CPH max.	No mechanical or electrical defects
Moisture Resistance	Method 1002, Type II, omit steps 7a & 7b	Insulation resistance > 100 megohms
Salt Spray	Method 1001, Condition B: 48 hours	Shall be capable of mating and unmating, and meet contact resistance requirements
Contact Resistance (MIL-STD-202)	Method 1001, Condition B: At 3 amps At 1 milliamp	8 milliohms maximum 10 milliohms maximum
Contact Retention	Per MIL-DTL-83513	5 lb. minimum axial load

ITT

Dimensions shown in mm
Specifications and dimensions subject to change

Micro-D Metal Shell - .050" Contact Spacing

How to Order (For MIL-DTL-83513 ordering information, see pp. 29-30)

R	MDM	-	51	P	H	001	P	-	XXX

RoHS Compliance

Series

Contact Arrangements

Contact Type

Termination Type

Termination Code

Hardware

Shell Finish Mod Codes

Series
MDM: (Size 9-100) Liquid Crystal Polymer (LCP)
MDM: (Combo Layout) Diallyl Phthalate (DAP)

Contact Arrangements
9-15-21-25-31-37-51-100 (standard)
16C5, 10C10, 7C2, 24C4 (coaxial) } or combination of
16P5, 10P10, 7P2, 24P4 (power) } coax and power

Contact Type
P - Pin
S - Socket

Termination Type
H - Harness-insulated wire.
L - Solid-uninsulated wire.
S - Solder pot to accept #26 AWG MAX. harness wire. (Not available with power contact arrangements.)

Termination code*
(H) 001 - 18",7/34 strand,#26 AWG, MIL-W-16878/4, Type E Teflon, yellow.
(H) 003 - 18", 7/34 strand, #26 AWG, MIL-W-16878/4, Type E Teflon, color coded to MIL-STD-681 System I.
(L) 1 - 1/2" uninsulated solid #25 AWG gold plated copper.
(L) 2 - 1" uninsulated solid #25 AWG gold plated copper.

For additional termination codes, please see pages 79-81.

Hardware
M - Military specification hardware, see page 16 for military hardware codes.
P - Jackpost
K - Jackscrew-standard profile
L - Jackscrew-low profile
F - Float mount
B - No hardware standard.091 (2.31) dia. hole for sizes 9-51; .120 (3.05) dia. hole for size 100.
A - .125 (3.18) dia. mounting holes for sizes 9-51; .166 (4.22) dia. hole for size 100.
B1 - .1475 (3.75) dia. hole for size 100 (Per MIL-DTL-83513)

Shell Finish Modification Codes
No Number - (Standard cadmium/yellow chromate over nickel
A174 - Electroless nickel
A172 - Gold over nickel
A141 - Irridite/alodine
A30 - Black anodize

Modification Codes
F222 - High Temp (200˚C)
F234 - 24 AWG Wire
A295 - Non-Magnetic
K135 - F222 and A295
A214 - Hot tin dip
K139 - F222 High (200˚C) and F234 (24 AWG Wire)

RoHS COMPLIANT PART NUMBERS

Dimensions shown in mm
Specifications and dimensions subject to change

Contact Arrangements

Face View of Pin insert - Use Reverse Order for Socket Side

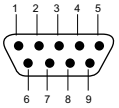

9 Contacts

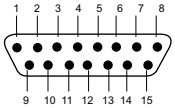

15 Contacts

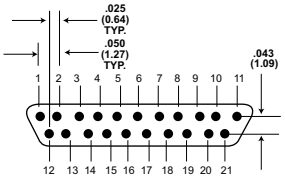

21 Contacts

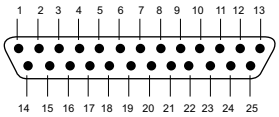

25 Contacts

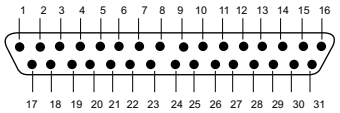

31 Contacts

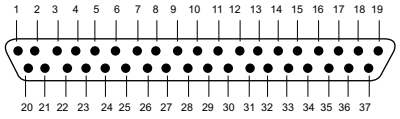

37 Contacts

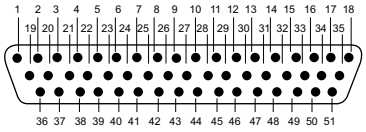

51 Contacts

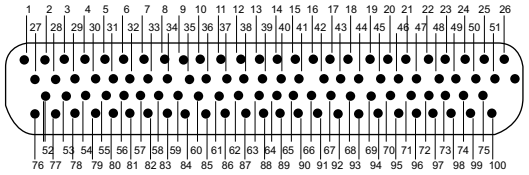

100 Contacts

Contact identication numbers are for reference only and do not appear on insulation or connector body.

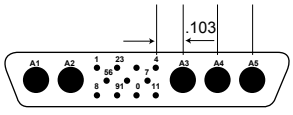

Size 51 Shell
11 Micro contact
5 Coax or 5 Power
16P5
16C5

Coaxial

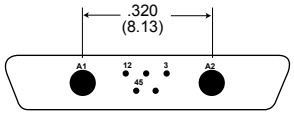

Size 25 Shell
5 Micro contact
2 Coax or 2 Power
7P2
7C2

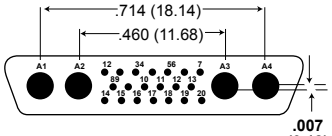

Size 51 Shell
20 Micro contacts
4 Coax or 4 Power
(Not MS)
25P4
25C4

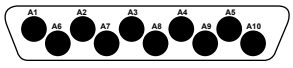

Size 100 Shell
0 Micro contact
10 Coax or 10 Power
10P10
10C10

Micro-D Metal Shell - .050" Contact Spacing

(Conforms to MIL-DTL-83513)

Plug



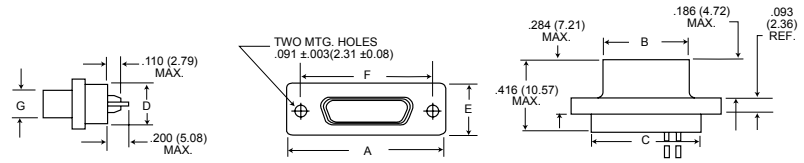

Receptacle



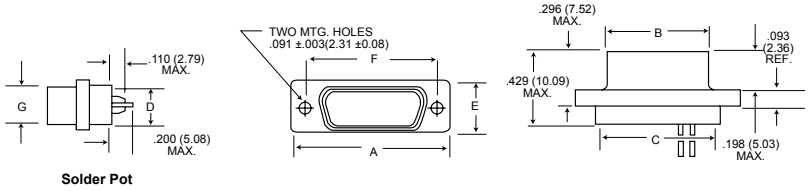

Receptacle (MDM-100 only)



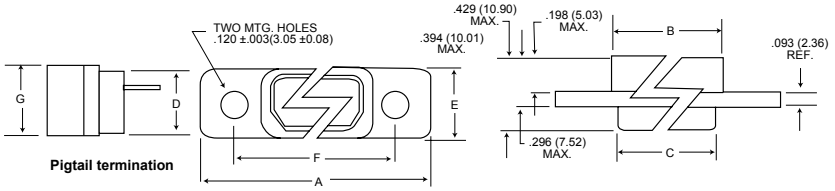

Part Number By Shell Size	A Max.	B Max.	C Max.	D Max.	E Max.	F +_.005 (0.13)	G Max.	Average Weights** oz. (gm.) ±5%
MDM-9P*	.785 (19.94)	.334 (8.48)	.400 (10.16)	.270 (6.86)	.308 (7.82)	.565 (14.35)	.185 (4.70)	.063 (1.79)
MDM-9S*	.785 (19.94)	.402 (10.21)	.400 (10.16)	.270 (6.86)	.308 (7.82)	.565 (14.35)	.253 (6.43)	.063 (1.79)
MDM-15P*	.935 (23.75)	.484 (12.29)	.550 (13.97)	.270 (6.86)	.308 (7.82)	.715 (18.16)	.185 (4.70)	.084 (2.39)
MDM-15S*	.935 (23.75)	.552 (13.97)	.550 (13.97)	.270 (6.86)	.308 (7.82)	.715 (18.16)	.253 (6.43)	.083 (2.37)
MDM-21P*	1.085 (27.56)	.634 (16.10)	.700 (17.78)	.270 (6.86)	.308 (7.82)	.865 (21.97)	.185 (4.70)	.105 (2.99)
MDM-21P*	1.085 (27.56)	.702 (17.83)	.700 (17.78)	.270 (6.86)	.308 (7.82)	.865 (21.97)	.253 (6.43)	.104 (2.97)
MDM-25P*	1.185 (30.10)	.734 (18.64)	.800 (20.32)	.270 (6.86)	.308 (7.82)	.965 (24.51)	.185 (4.70)	.119 (3.39)
MDM-25S*	1.185 (30.10)	.802 (20.37)	.800 (20.32)	.270 (6.86)	.308 (7.82)	.965 (24.51)	.253 (6.43)	.118 (3.36)
MDM-31P*	1.335 (33.91)	.884 (22.45)	.950 (24.13)	.270 (6.86)	.308 (7.82)	1.115 (28.32)	.185 (4.70)	.140 (3.99)
MDM-31S*	1.335 (33.91)	.952 (24.18)	.950 (24.13)	.270 (6.86)	.308 (7.82)	1.115 (28.32)	.245 (6.43)	.139 (3.96)
MDM-37P*	1.485 (37.72)	1.034 (26.26)	1.100 (27.94)	.270 (6.86)	.308 (7.82)	1.265 (32.13)	.185 (4.70)	.161 (4.59)
MDM-37S*	1.485 (37.72)	1.102 (27.99)	1.100 (27.94)	.270 (6.86)	.308 (7.82)	1.265 (32.13)	.253 (6.43)	.160 (4.56)
MDM-51P*	1.435 (36.45)	.984 (24.99)	1.050 (26.67)	.310 (7.87)	.351 (8.92)	1.215 (30.86)	.228 (5.79)	.193 (5.50)
MDM-51S*	1.435 (36.45)	1.052 (26.72)	1.050 (26.67)	.310 (7.87)	.351 (8.92)	1.215 (30.86)	.296 (7.52)	.188 (5.35)
MDM-100P*	2.170 (55.12)	1.384 (35.15)	1.442 (36.63)	.360 (9.14)	.394 (10.01)	1.800 (45.72)	.271 (6.88)	.500 (14.3)
MDM-100S*	2.170 (55.12)	1.508 (38.10)	1.442 (36.63)	.360 (9.14)	.394 (10.01)	1.800 (45.72)	.394 (10.01)	1.040 (29.5)

*Add lead type and length; see How To Order.

***Weight given is 1/2" uninsulated, solid, #25 AWG gold plated copper pigtails.

Panel Mounting Dimensions (Sizes 9 - 100)

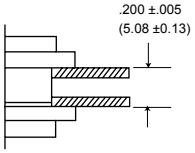

Plug and Receptacle Rear Mounted

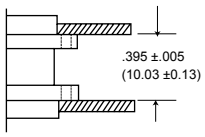

Plug and Receptacle Front Mounted

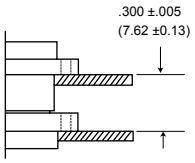

Plug Front Mounted Receptacle Rear Mounted

Dimensions shown in mm
Specifications and dimensions subject to change

Micro-D Metal Shell - .050" Contact Spacing MDM

Connector Saver



Save wear and tear on your equipment and system connectors with Cannon's MDM Connector Saver. Eliminate multiple mating and de-mating during testing and final checkout by simply mating the "Connector Saver" to your unit and using the opposite side for your testing interface. This result is less wear, less tear and less chance of damage. Our MDM Connector Saver is available in all eight standard MDM layouts. Mating hardware is also available and can be included with the original order, or it may be ordered separately.

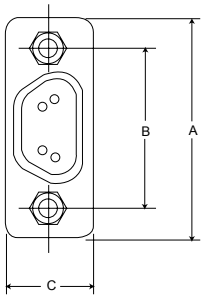

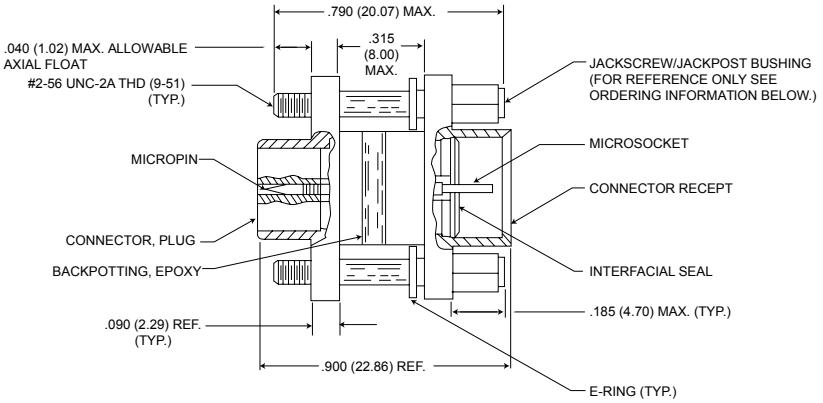

MDM Size 9 Shown

Size	Electroless Nickel (A174) Plated		Cadmium over Nickel (A101) Plated		*Hardware Kits	A Max.	B ± .005 (0.13)	C Max.
	With Hardware	W/O Hardware	With Hardware	W/O Hardware				
9	MDM98479-86	MDM98479-18	MDM98479-78	MDM-97294-371	320-9505-014**	.785 (19.94)	.565 (14.35)	.308 (7.82)
15	MDM98479-87	MDM98479-19	MDM98479-79	MDM-97294-372	320-9505-014**	.935 (23.75)	.715 (18.16)	.308 (7.82)
21	MDM98479-88	MDM98479-20	MDM98479-80	MDM-97294-373	320-9505-014**	1.085 (27.56)	.865 (21.97)	.308 (7.82)
25	MDM98479-89	MDM98479-21	MDM98479-81	MDM-97294-374	320-9505-014**	1.185 (30.10)	.965 (24.51)	.308 (7.82)
31	MDM98479-90	MDM98479-14	MDM98479-82	MDM-97294-375	320-9505-014**	1.335 (33.91)	1.115 (28.32)	.308 (7.82)
37	MDM98479-91	MDM98479-15	MDM98479-83	MDM-97294-376	320-9505-014**	1.485 (37.72)	1.265 (32.13)	.308 (7.82)
51	MDM98479-92	MDM98479-16	MDM98479-84	MDM-97294-377	320-9505-014**	1.435 (36.45)	1.215 (30.86)	.351 (8.91)
100	MDM98479-93	MDM98479-17	MDM98479-85	MDM-97294-717	320-9508-014**	2.170 (55.12)	1.800 (45.72)	.394 (10.01)

* Kit contains 2 jackpost/jackscrew bushings and 2 E-Rings.
** Size 9-51-#2-56 UNC-2B Thread
*** Size 100-#4-40 UNC-2B Thread

Micro-D Metal Shell - .050" Contact Spacing MDM

Panel Cutouts

Shell Sizes 9 thru 51

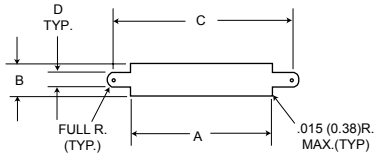

Figure 1
Front Mounting

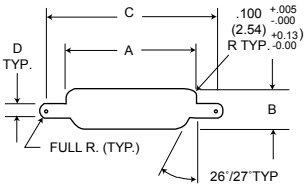

Figure 2
Rear Mounting

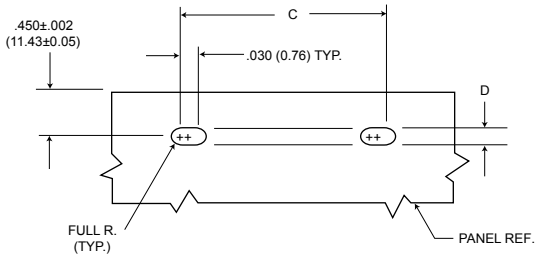

Figure 3
Edgeboard Mounting

Shell Size 100

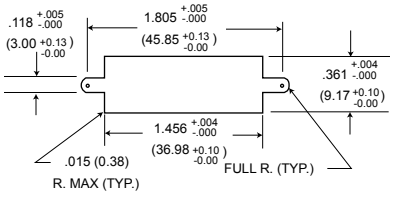

Figure 1
Front Mounting

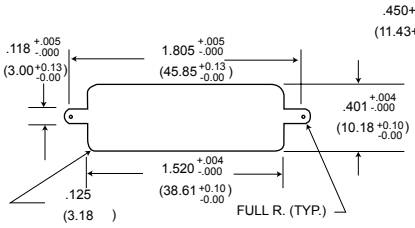

Figure 2
Rear Mounting

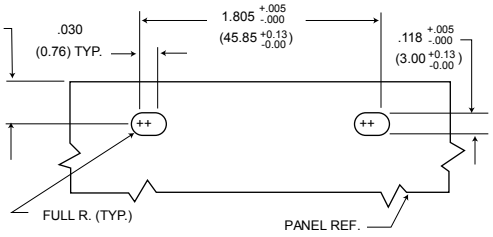

Figure 3
Edgeboard Mounting

For 9-51 Shell Sizes

NOTES:

1. Front panel mounting is the preferred mounting method. Front panel mounting dimensions (figure 1) will accommodate either #2-56 screws or jackpost hardware.

2. Rear panel mount dimensions (figure 2) will accommodate #2-56 screw hardware only. When mounting the connector with rear panel mount jackpost see the panel cut-out dimensions.

3. Edgeboard mounting bracket (figure 3) uses #2- 56 screws. Dimension .450+/-.002 (11.43+/-0.05) locates the MDM receptacle flush with the end of the board.

For 100 Shell Size

NOTES:

1. Front mounting is the preferred mounting method. Front panel mounting dimensions (figure 1) will accommodate either #4-40 screws or jackpost hardware.

2. Rear panel mount dimensions (figure 2) will accommodate #4-40 screw hardware only see the panel cut-out dimensions.

3.Edgeboard mounting bracket (figure 3) uses #4-40 screws. Dimension .450+/-.002 (11.43+/-0.05) locates the MDM receptacle flush with the end of the board.

Shell Size	Cutout Figure	A +.004 -.000	B +.004 -.000	C +.005 -.000	D +.005 -.000
9	1	.408	.271	.570	.089
	2	.401	.252	.570	.089
	3	-	-	.570	.089
15	1	.558	.271	.720	.089
	2	.551	.252	.720	.089
	3	-	-	.720	.089
21	1	.708	.271	.870	.089
	2	.701	.252	.870	.089
	3	-	-	.870	.089
25	1	.808	.271	.970	.089
	2	.801	.252	.970	.089
	3	-	-	.970	.089
31	1	.958	.271	1.120	.089
	2	.951	.252	1.120	.089
	3	-	-	1.120	.089
37	1	1.108	.271	1.270	.089
	2	1.101	.248	1.270	.089
	3	-	-	1.270	.089
51	1	1.058	.315	1.220	.089
	2	1.051	.295	1.220	.089
	3	-	-	1.220	.089

Dimensions shown in mm
Specifications and dimensions subject to change

Mounting Hardware Views (sizes 9-51)

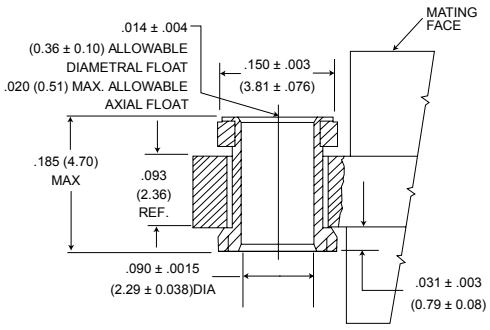

Float Mount - (F)

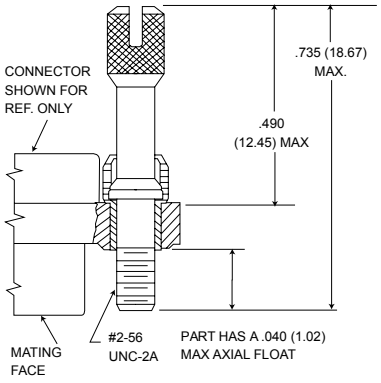

Jackscrew - (K) Standard Profile

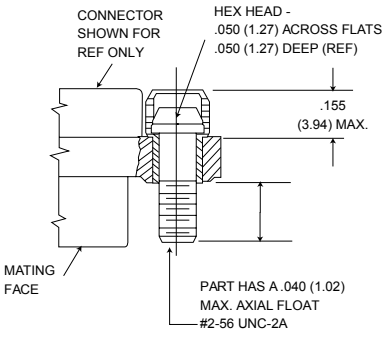

Jackscrew - (L) Low Profile

Shown here is a cutaway view of the float mount for the MDM connector. The basic shell dimensions are the same for the float mount and the screw mounting hole configurations. View shown is for standard float mount front panel mounting. Reverse mounting is available on request.

* NOTE: Torque values are as follows:
Low Profile Jackscrew (L)-2.5 in-lbs
Standard Jackscrew (K)-2.5 in-lbs

Mounting Hardware to Military Specification (for sizes 9 - 51) per MIL-DTL-83513/5

This hardware supplied in kits unassembled (2 pieces of each item).

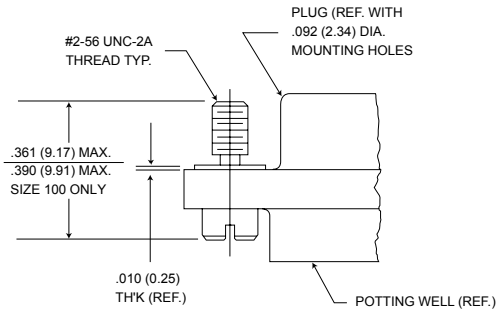

Figure 1. Jackscrew - Low profile
Slotted Head
Size 9-51
Size 100*

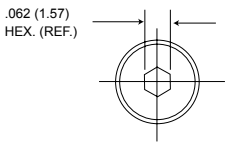

Allen head
Optional Head Configuration
Plug and Receptacle
Low and High Profile
Size 9-51
Size 100* (same dimensions)

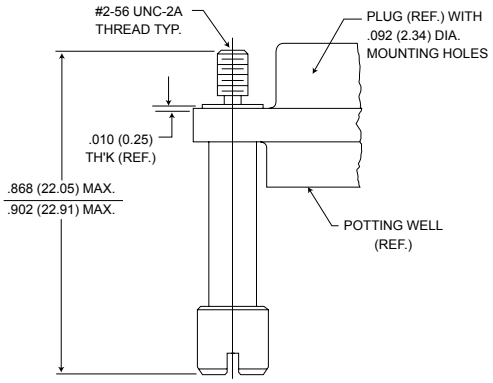

Figure 2. Jackscrew - High Profile
Slotted Head
Size 9-51
Size 100*

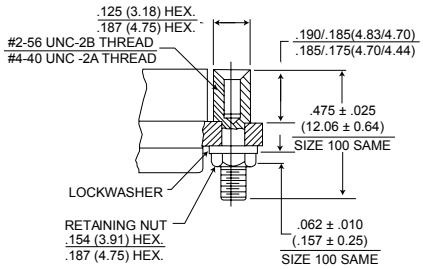

Figure 3. Jackpost Assembly
Size 9-51
Size 100*

*Size 100 requires B1 size mounting holes for Mil-Spec hardware

Note: Torque values as follows:
Size 9-51 4.0 in-lbs
Size 100 6.0 in-lbs

To order hardware kits separately, order either by M83513/5-** or by 320-950X-XXX.

Description	Size 9-51 Mod Code Part Number	* *	Size 100* Mod Code Part Number	* *
Slotted Head Jackscrew Assy Low Profile (Figure 1)	M5 320-9508-025	05	M15 320-9508-021	15
Slotted Head Jackscrew Assy Low Profile (Figure 2)	M6 320-9508-027	06	M16 320-9508-023	16
Allen Head Jackscrew Assy Low Profile (Figure 1)	M2 320-9508-026	02	M12 320-9508-022	12
Allen Head Jackscrew Assy High Profile (Figure 2)	M3 320-9508-028	03	M13 320-9508-024	13
Jackpost Assy (Figure 3)	M7 320-9505-033	07	M17 320-9505-030	17

Micro-D Metal Shell - .050" Contact Spacing

Mounting Hardware Views for Front Panel Mount (for sizes 9-51)

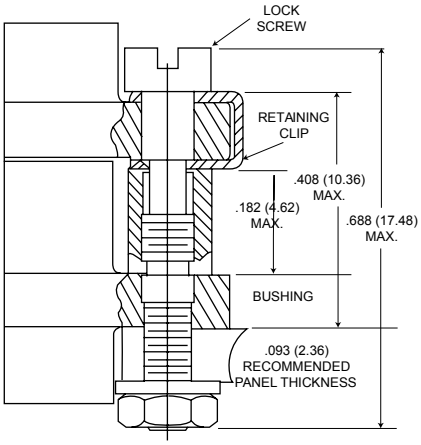

Screw Lock Assembly*
*NOTE Torque value is 2.5 in/lbs max.

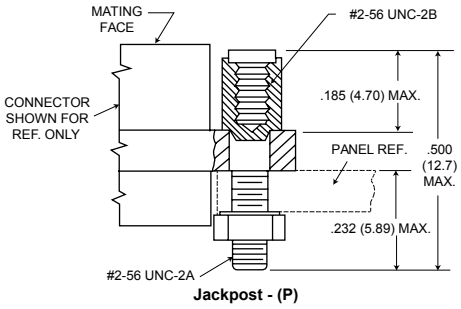

Jackpost - (P)

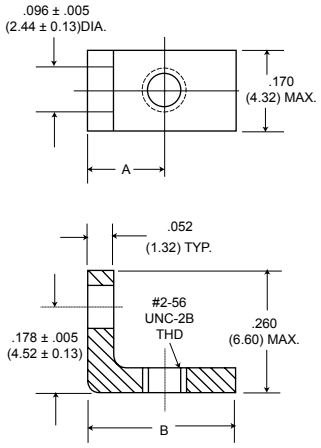

90° Angle Mounting Bracket

Description	Part Number	A +/-.005 (±0.13)	B +/- .010
Screw	322-9500-000	N/A	
Jackpost kit	320-9505-000	N/A	
Mounting Bracket 90° MDM for 9 thru 37 Shell Sizes	015-9516-002	.147 (3.73)	.277 (7.82)
Mounting Bracket 90° MDM for 51 Shell Size	015-9516-003	.169 (4.29)	.350 (8.89)

NOTES: Screw lock assembly (322-9500-000) can be used for front mounting only. Jackpost kit (320-9505-000) consists of two assmblies, shipped unassmbled.

Jackpost Bushing (for rear panel mounting-for sizes 9-51)

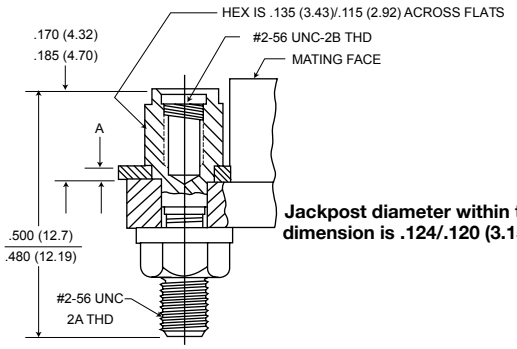

Jackpost diameter within the "A" dimension is .124/.120 (3.15/3.05).

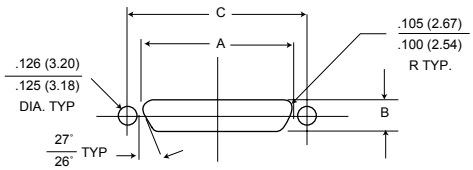

Panel A Thickness	A +.005 (0.13) -.000 (0.00)	Jackpost Kit Number*
3/32 (2.4)	.087 (2.21)	320-9505-007
1/16 (1.6)	.056 (1.42)	320-9505-006
3/64 (1.2)	.042 (1.07)	320-9505-005
1/32 (0.8)	.025 (0.64)	320-9505-004

*A kit consists of 2 jackpost, 2 nuts, 2 washers.

Plug and Receptacle Dimensions

Shell Size	A +.004 (0.10) -.000 (0.00)	B +.004 (0.10) -.000 (0.00)	C +_.005 (0.13)
9	.401 (10.19)	.252 (6.40)	.565 (14.35)
15	.551 (14.00)	.252 (6.40)	.715 (18.16)
21	.701 (17.81)	.252 (6.40)	.865 (21.97)
25	.801 (20.34)	.252 (6.40)	.965 (24.51)
31	.951 (24.16)	.252 (6.40)	1.115 (28.34)
37	1.101 (27.97)	.252 (6.40)	1.265 (32.13)
51	1.051 (26.70)	.295 (7.49)	1.215 (30.86)

Dimensions shown in mm
Specifications and dimensions subject to change

Mounting Hardware Views (for size 100)

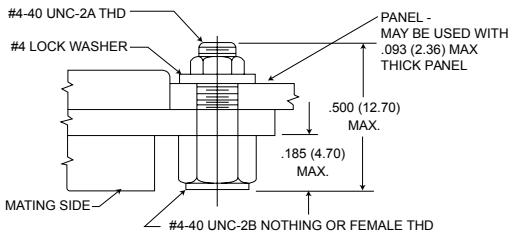

Jackpost - (P)

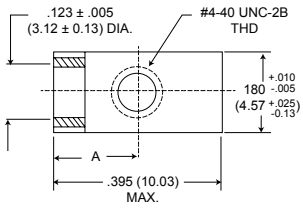

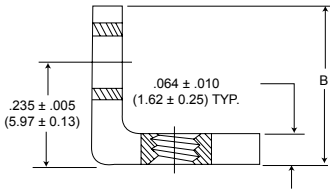

90° Angle Mounting Bracket

Description	Part Number	A +/-.005 (±0.13)	B Max.
Screw	322-9500-000	N/A	
Jackpost kit	320-9505-000	N/A	
Mounting Bracket 90° MDM for 9 thru 37 Shell Sizes	015-9516-002	.147 (3.73)	.308 (7.82)
Mounting Bracket 90° MDM for 51 Shell Size	015-9516-003	.169 (4.29)	.350 (8.89)

This hardware is factory installed.

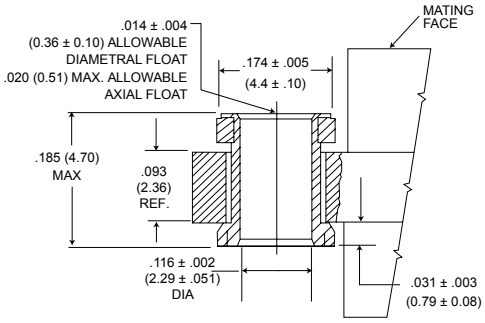

Float Mount - (F) Std.

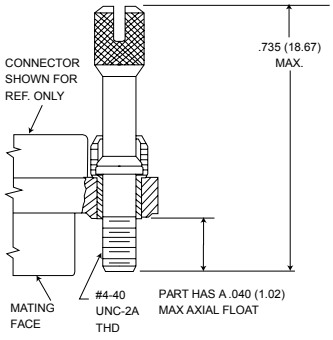

Jackscrew - (K) Standard

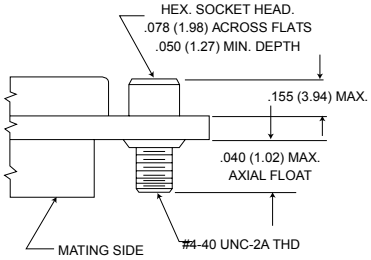

Jackscrew - (L) (Low Profile)

*NOTE: Torque values are as follows:
Low Profile Jackscrew (L)-4.0 in-lbs
Standard Profile Jackscrew (K)-4.0 in-lbs

Jackpost Bushing (for Rear Panel Mounting)

Panel Thickness	A +.005 (0.13) -.000 (0.00)	Jackpost Kit Number*
3/32 (2.4)	.087 (2.21)	320-9505-013
1/16 (1.6)	.058 (1.42)	320-9505-012
1/32 (0.8)	.025 (0.64)	320-9505-010
3/64 (1.2)	.042 (1.07)	320-9505-011

*2 jackposts, 2 nuts, 2 washers

Torque value for size 100
Note: Size 100 requires B mounting hole shell size when using rear panel mount jackposts

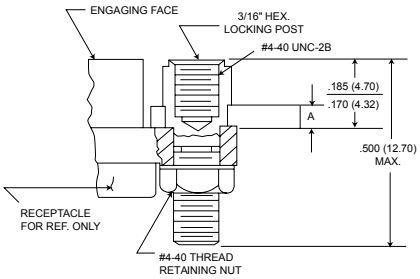

Dimensions for Rear Panel Mounting

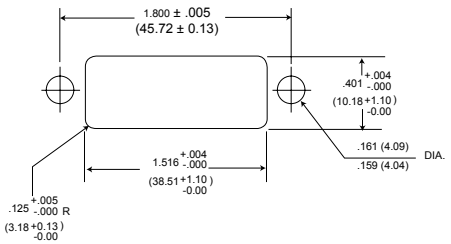

Micro-D Coaxial/Power Combo - .050" Contact Spacing MDM

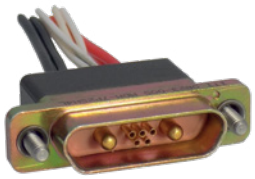

Cannon offers three options of the MDM Coaxial/Power Microminiature Connector:

MDM Coaxial: The MDM Metal Shell Connectors have been tooled in several coaxial layouts, offering the versatility of combining coaxial & signal lines in the same connector.

MDM Power: The same insulator used with coaxial contacts is available with power contacts, offering the versatility of combining power and signal lines in the same connector.

MDM Coaxial/Power: Power and coaxial contacts can be interchanged as desired.

How to Order (For MIL-DTL-83513 ordering information, see page 34 - 35)

R	MDM	-	51	P	H	001	P	-	XXX

RoHS Compliance

Series

Contact Arrangements

Contact Type

Termination Type

Termination Code

Hardware

Shell Finish Mod Codes

Series
MDM: (Size 9-100) Liquid Crystal Polymer (LCP)

Contact Arrangements
9-15-21-25-31-37-51-100 (standard)
16C5, 10C10, 7C2, 24C4 (coaxial) or combination of
16P5, 10P10, 7P2, 24P4 (power) } coax and power

Contact Type
P - Pin S - Socket

Termination Type
H - Harness-insulated wire.
L - Solid-uninsulated wire.
S - Solder pot to accept #26 AWG MAX. harness wire.
(Not available with power contact arrangements)

Hardware
M - Military specification hardware, see page 16 for military hardware codes.
P - Jackpost
K - Jackscrew-standard profile
L - Jackscrew-low profile
F - Float mount
B - No hardware standard.091 (2.31) dia. hole for sizes 9-51; .120 (3.05) dia. hole for size 100.
A - .125 (3.18) dia. mounting holes for sizes 9-51; .166 (4.22) dia. hole for size 100.
B1 - .1475 (3.75) dia. hole for size 100 (Per MIL-DTL-83513)

Termination code*
(H) 001 - 18",7/34 strand,#26 AWG, MIL-W-16878/4, Type E Teflon, yellow.
(H) 003 - 18", 7/34 strand, #26 AWG, MIL-W-16878/4, Type E Teflon, color coded to MIL-STD-681 System I.
(L) 1 - 1/2" uninsulated solid #25 AWG gold plated copper.
(L) 2 - 1" uninsulated solid #25 AWG gold plated copper.

Shell Finish Modification Codes
No Number - (Standard cadmium/yellow chromate over nickel
A174 - Electroless nickel
A172 - Gold over nickel
A141 - Irridite/alodine
A30 - Black anodize

RoHS COMPLIANT PART NUMBERS

*See pp. 79-80 for additional termination codes.

Dimensions shown in mm
Specifications and dimensions subject to change

Micro-D Coaxial/Power Combo - .050" Contact Spacing MDM-C/P

7C2/7P2

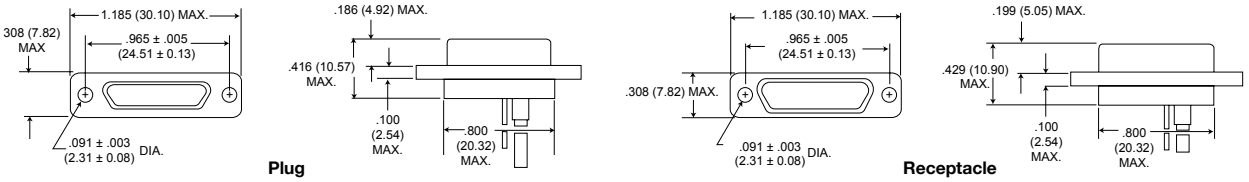

24C4/24P4

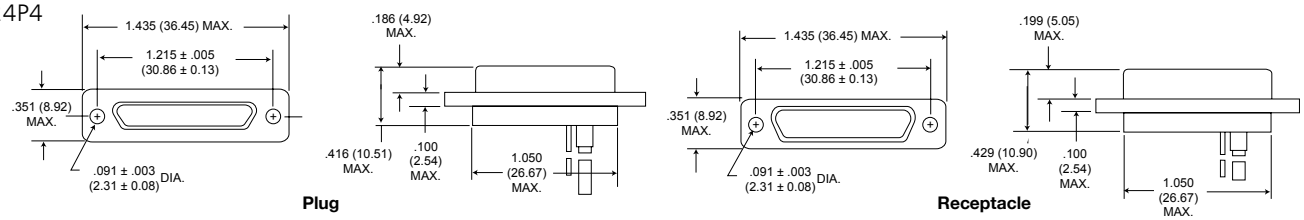

Power Contacts

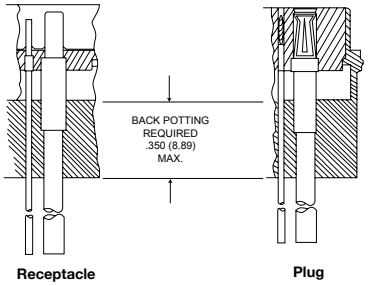

Coaxial Contacts

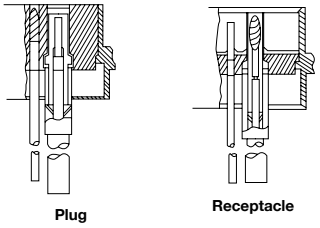

Micro-D PCB - .050" Contact Spacing

MDM-PCB



Our MDM-PCB Microminiature Connectors are designed for use with flex circuitry, flat cable and printed circuit boards or multi-layer boards. These interconnects use a standard MDM metal shell and provide high density and high reliability in board-to-board, board-to-cable and cable-to-cable applications. MDM PCB micro connectors are available in 8 shell sizes with 9 to 100 contacts. Terminations may be straight (BS) or at 90° right angle (BR, CBR) board thickness. Jackpost mounting for use with locking hardware is also available.

How to Order - MDM-PCB Series

R	MDM	*	-	25	P	BS	P	-	T	L39	A174

RoHS Compliance
Series
Insulator Material
Contact Arrangements
Contact Type
Termination Type
Mounting Hardware (Shell Flange)
Mounting Hardware for PDB
Termination Tail Length Modification Code
Shell Finish Modification Codes

Series
MDM - Micro "D" Metal Shell

Insulator Material
Liquid Crystal Polymer (LCP)

Contact Arrangements
9, 15, 21, 25, 31, 37, 51, and 100

Contact Type
P - Pin (Plug)
S - Socket (Receptacle)

Termination Type
BS - HStraight PCB Termination
BR - Right Angle PCB Termination
CBR - Right Angle Narrow Profile PCB Terminations
CBS - Straight Narrow Profile

Mounting Hardware (Shell Flange)
P - Jackpost
R - Rear Panel Mount Jackpost
  R1 - .032
  R2 - .047
  R3 - .062
  R4 - .093
  R5 - .125
M7 - Jackposts M83513/5-07 (Sizes 9-51)
M17 - Jackposts M83513/5-17 (Size 100)
No letter - none

Mounting Hardware for PCB
T - Threaded Insert (metal)
  #2-56 Thd for Shell Sizes 9 thru 51
  #4-40 Thd for Shell Size 100
No letter - none

Termination Tail Length Modification Code
None - .109 (2.77) ±.015 (0.38) Standard (solder dipped)
L61 - .125 (3.18)
L67 - .140
L56 - .150 (3.81)
L66 - .171
L57 - .190 (4.83)
L39 - .250 (6.35)
L58 - .375 (9.52)

Shell Finish Modification Codes
None - Yellow Chromate/Cadmium over Nickel
A174 - Electroless Nickel
A172 - Gold over Nickel
A141 - Irridite/Alodine
A30 - Black Anodize
(For special modification codes, consult customer service.)

NOTE: Back molding material – Epoxy Hysol #MG40FS

RoHS COMPLIANT PART NUMBERS

Dimensions shown in mm
Specifications and dimensions subject to change

Micro-D PCB - .050" Contact Spacing MDM-PCB

BS (Board Straight) Series

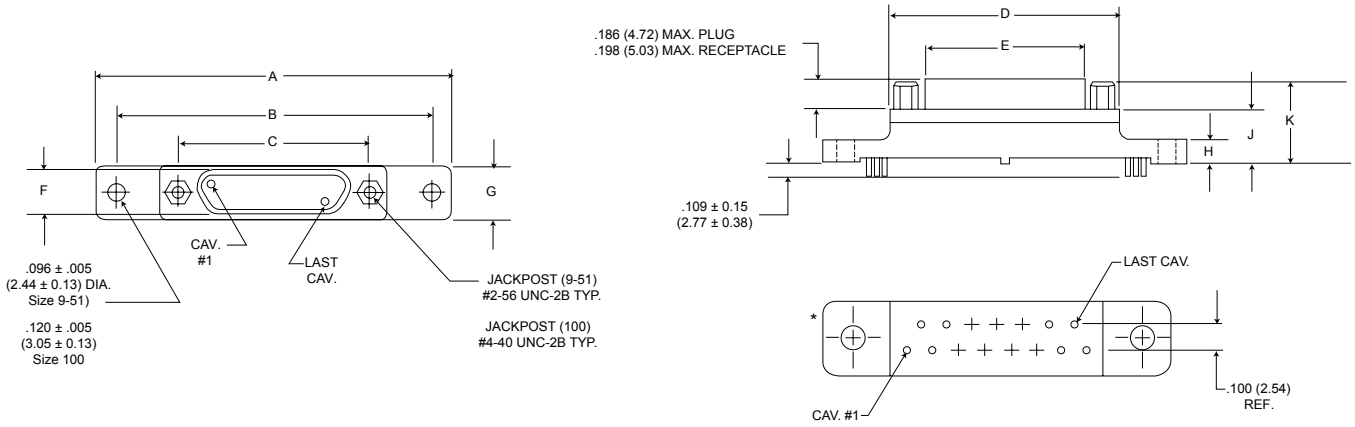

PCB Termination Arrangements* (Viewed from PCB solder side)

Identification number shown for plug connector, use reverse order for socket connector.

NOTE: Dimensions shown are for reference only-consult factory for final design dimensions.

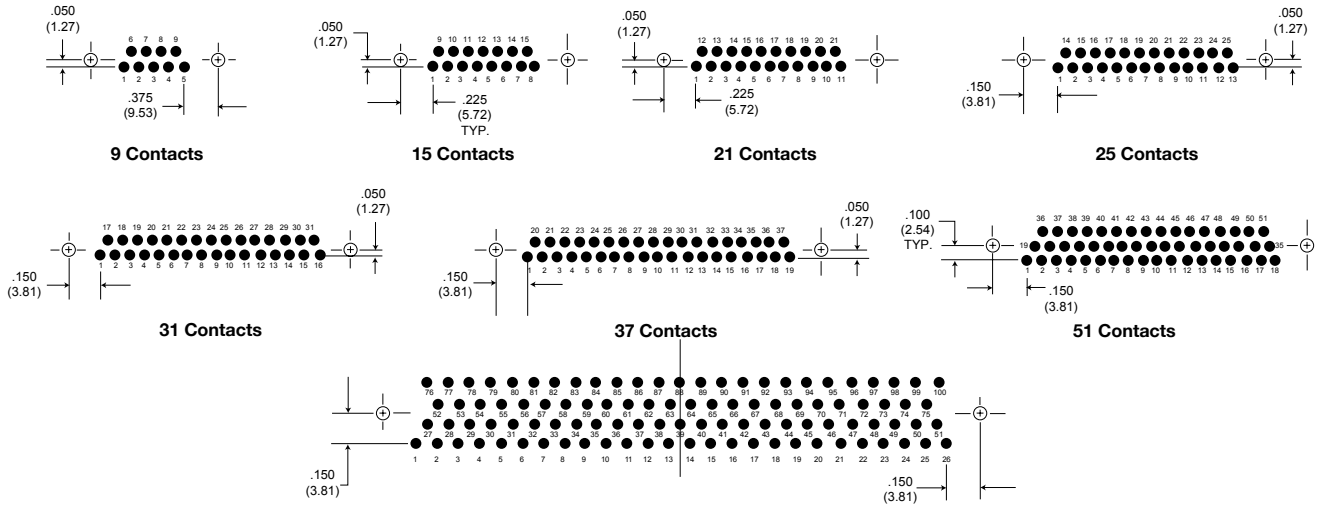

NOTE: Standard lead termination is #24 AWG, solid copper, solder or tin dipped
All Termination Configurations .100 (2.54) x .100 (2.54) Grid Pattern, Offset .050 (1.27)

Part Number By Shell Size	A Max.	B ±.007 (.18)	C ±.005 (.13)	D Max.	E Max.	F Max.	G Max.	H Max.	J Max.	K Max.
MDM-9PBS*	1.390 (35.31)	1.150 (29.21)	.565 (14.35)	.785 (19.94)	.334 (8.48)	.185 (4.70)	.308 (7.82)	.165 (4.19)	.355 (9.02)	.555 (14.10)
MDM-9SBS*	1.390 (35.31)	1.150 (29.21)	.565 (14.35)	.785 (19.94)	.402 (10.21)	.253 (6.43)	.308 (7.82)	.165 (4.19)	.355 (9.02)	.555 (14.10)
MDM-15PBS*	1.390 (35.31)	1.150 (29.21)	.715 (18.16)	.935 (23.75)	.484 (12.29)	.185 (4.70)	.308 (7.82)	.165 (4.19)	.355 (9.02)	.555 (14.10)
MDM-15SBS*	1.390 (35.31)	1.150 (29.21)	.715 (18.16)	.935 (23.75)	.552 (13.97)	.253 (6.43)	.308 (7.82)	.165 (4.19)	.355 (9.02)	.555 (14.10)
MDM-21PBS*	1.690 (43.93)	1.450 (36.83)	.865 (21.97)	1.085 (27.56)	.634 (16.10)	.185 (4.70)	.308 (7.82)	.165 (4.19)	.355 (9.02)	.555 (14.10)
MDM-21SBS*	1.690 (43.93)	1.450 (36.83)	.865 (21.97)	1.085 (27.56)	.702 (17.83)	.253 (6.43)	.308 (7.82)	.165 (4.19)	.355 (9.02)	.555 (14.10)
MDM-25PBS	1.740 (44.20)	1.500 (38.10)	.965 (24.51)	1.185 (30.10)	.734 (18.64)	.185 (4.70)	.308 (7.82)	.165 (4.19)	.355 (9.02)	.555 (14.10)
MDM-25SBS*	1.740 (44.20)	1.500 (38.10)	.965 (24.51)	1.185 (30.10)	.802 (20.37)	.253 (6.43)	.308 (7.82)	.165 (4.19)	.355 (9.02)	.555 (14.10)
MDM-31PBS*	2.040 (51.82)	1.800 (45.72)	1.115 (28.32)	1.335 (33.91)	.884 (22.45)	.185 (4.70)	.308 (7.82)	.165 (4.19)	.355 (9.02)	.555 (14.10)
MDM-31SBS*	2.040 (51.82)	1.800 (45.72)	1.115 (28.32)	1.335 (33.91)	.952 (24.18)	.253 (6.43)	.308 (7.82)	.165 (4.19)	.355 (9.02)	.555 (14.10)
MDM-37PBS*	2.340 (59.44)	2.100 (53.34)	1.265 (32.13)	1.485 (37.72)	1.034 (26.26)	.185 (4.70)	.308 (7.82)	.165 (4.19)	.355 (9.02)	.555 (14.10)
MDM-37SBS*	2.340 (59.44)	2.100 (53.34)	1.265 (32.13)	1.485 (37.72)	1.102 (27.99)	.253 (6.43)	.308 (7.82)	.165 (4.19)	.355 (9.02)	.555 (14.10)
MDM-51PBS*	2.270 (67.66)	2.000 (50.80)	1.215 (30.86)	1.435 (36.45)	.984 (24.99)	.228 (5.79)	.351 (8.92)	.165 (4.19)	.355 (9.02)	.555 (14.10)
MDM-51SBS*	2.270 (67.66)	2.000 (50.80)	1.215 (30.86)	1.435 (36.45)	1.052 (26.72)	.296 (7.52)	.351 (8.92)	.165 (4.19)	.355 (9.02)	.555 (14.10)
MDM-100PBS*	3.070 (77.98)	2.800 (71.12)	1.800 (45.72)	2.175 (55.24)	1.384 (35.15)	.271 (6.88)	.460 (11.68)	.303 (7.70)	.550 (12.70)	.686 (17.42)
MDM-100SBS*	3.070 (77.98)	2.800 (71.12)	1.800 (45.72)	2.175 (55.24)	1.508 (38.30)	.394 (10.01)	.460 (11.68)	.303 (7.70)	.550 (12.70)	.686 (17.42)

*For jackpost, add letter "P" or "M7" for sizes 9-51, "M17" for size 100.

Micro-D PCB - .050" Contact Spacing

MDM-PCB

BR (Board Right Angle) Series

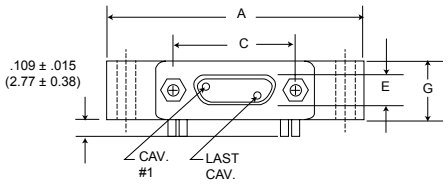

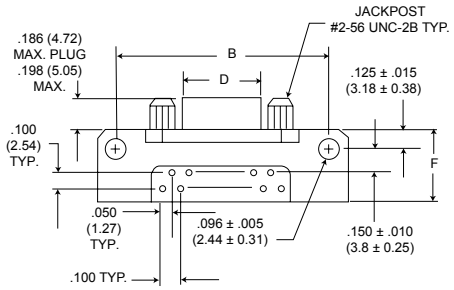

PCB Termination Arrangements (Viewed from bottom of connector, PCB solder side.)

Identification number shown for plug connector, use reverse order for socket connector.

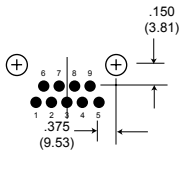

9 Contacts

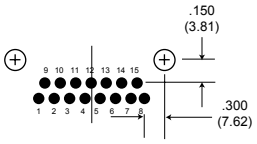

15 Contacts

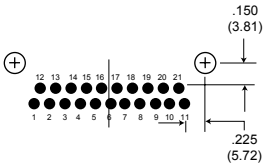

21 Contacts

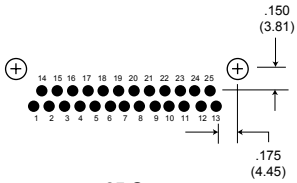

25 Contacts

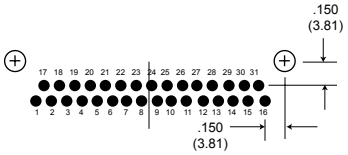

31 Contacts

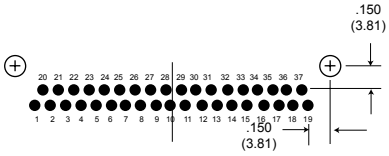

37 Contacts

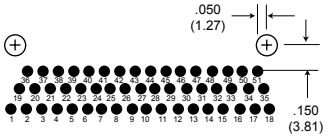

51 Contacts

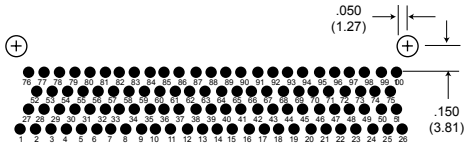

100 Contacts

NOTE: Standard lead termination is #24 AWG, gold plated, solid copper, solder or tin dripped.

All Termination Configurations .100 (2.54) x .100 (2.54) Grid Pattern, Offset .050 (1.27).

Part Number By Shell Size	A Max.	B ± .007 (.18)	C ± .005 (.13)	D Max.	E Max.	F Max.	G Max.
MDM-9PBR*	1.390 (35.31)	1.150 (29.21)	.565 (14.35)	334 (8.48)	.185 (4.70)	.455 (11.56)	.308 (7.82)
MDM-9SBR*	1.390 (35.31)	1.150 (29.21)	.565 (14.35)	.402 (10.21)	.253 (6.43)	.455 (11.56)	.308 (7.82)
MDM-15PBR*	1.540 (39.12)	1.300 (33.02)	.715 (18.16)	.484 (12.29)	.185 (4.70)	.455 (11.56)	.308 (7.82)
MDM-15SBR*	1.540 (39.12)	1.300 (33.02)	.715 (18.16)	.552 (13.97)	.253 (6.43)	.455 (11.56)	.308 (7.82)
MDM-21PBR*	1.690 (42.93)	1.450 (36.83)	.865 (21.97)	.634 (16.10)	.185 (4.70)	.455 (11.56)	.308 (7.82)
MDM-21SBR*	1.690 (42.93)	1.450 (36.83)	.865 (21.97)	.702 (17.83)	.253 (6.43)	.455 (11.56)	.308 (7.82)
MDM-25PBR*	1.790 (45.47)	1.550 (39.37)	.965 (24.51)	.734 (18.64)	.185 (4.70)	.455 (11.56)	.308 (7.82)
MDM-25SBR*	1.790 (45.47)	1.550 (39.37)	.965 (24.51)	.802 (20.37)	.253 (6.43)	.455 (11.56)	.308 (7.82)
MDM-31PBR*	2.040 (51.82)	1.800 (45.72)	1.115 (28.32)	.884 (22.45)	.185 (4.70)	.455 (11.56)	.308 (7.82)
MDM-31SBR*	2.040 (51.52)	1.800 (45.72)	1.115 (28.32)	.952 (24.18)	.253 (6.43)	.455 (11.56)	.308 (7.82)
MDM-37PBR*	2.340 (59.44)	2.100 (53.34)	1.265 (32.13)	1.034 (26.26)	.185 (4.70)	.455 (11.56)	.308 (7.82)
MDM-37SBR*	2.340 (59.44)	2.100 (53.34)	1.265 (32.13)	1.102 (27.99)	.253 (6.43)	.455 (11.56)	.308 (7.82)
MDM-51PBR*	1.875 (47.63)	1.600 (40.64)	1.215 (30.86)	.984 (24.99)	.228 (5.79)	.565 (14.35)	.351 (8.92)
MDM-51SBR*	1.875 (47.63)	1.600 (40.64)	1.215 (30.86)	1.052 (26.72)	.296 (7.52)	.565 (14.35)	.351 (8.92)
MDM-100PBR*	2.74 (69.72)	2.500 (63.50)	1.800 (45.72)	1.384 (35.15)	.271 (6.88)	.755 (19.18)	.394 (10.01)
MDM-100SBR*	2.74 (69.72)	2.500 (63.50)	1.800 (45.72)	1.508 (38.10)	.394 (10.01)	.755 (19.18)	.394 (10.01)

*For jackpost, add letter "P" or "M7" for sizes 9-51, "M17" for size 100.

*Add lead type and length; see How To Order.

Dimensions shown in mm

Specifications and dimensions subject to change

Micro-D PCB - .050" Contact Spacing MDM-PCB

CBR (Condensed Board Right Angle) Series

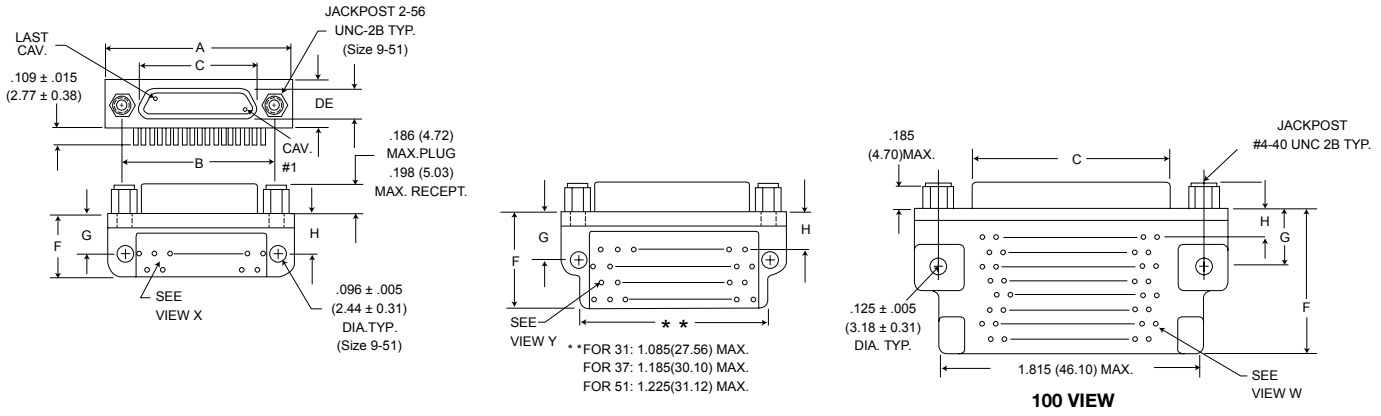

PCB Termination Arrangements (Viewed from bottom of connector, PCB solder side.)

Identification number shown for plug connector, use reverse order for socket connector.

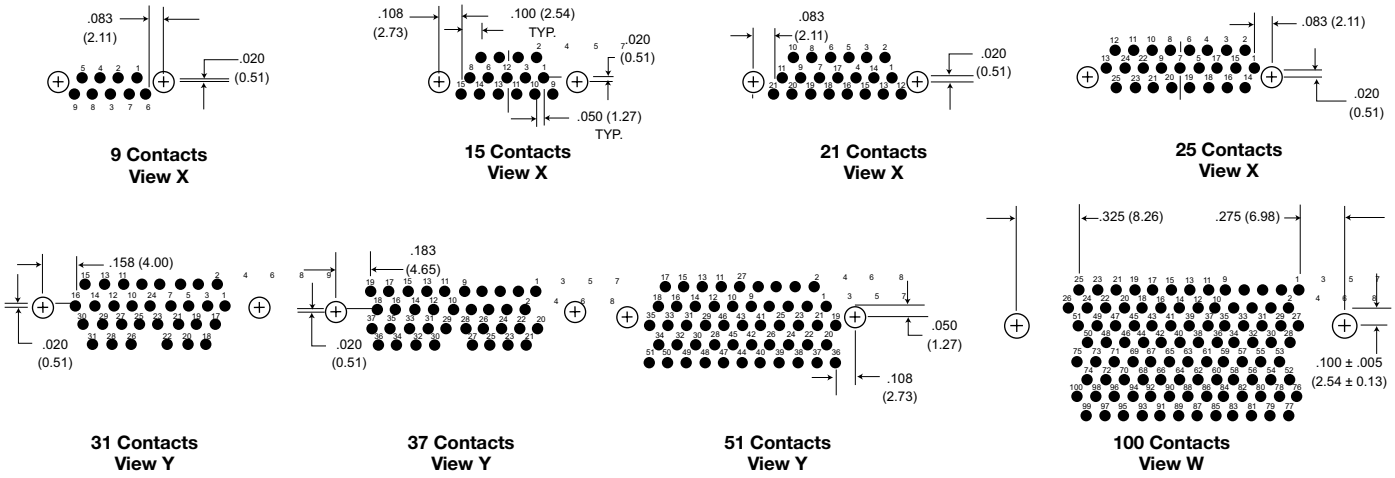

All Termination Configurations .100 (2.54) x .100 (2.54) Grid Pattern, Offset .050 (1.27).

NOTE: Standard lead termination is #24 AWG, solid copper, solder or tin dripped.

Part Number By Shell Size	A Max.	B ± .005 (.13)	C Max.	D Max.	E Max.	F Max.	G ± .010 (.25)	H ± .010 (.25)
MDM-9PCBR*	.785 (19.94)	.565 (14.35)	334 (8.48)	308 (7.82)	.185 (4.70)	420 (10.67)	.250 (6.35)	.230 (5.81)
MDM-9SCBR*	.785 (19.94)	.565 (14.35)	.402 (10.21)	.308 (7.82)	.253 (6.43)	.420 (10.67)	.250 (6.35)	.230 (5.81)
MDM-15PCBR*	.935 (23.75)	.715 (18.16)	.484 (12.29)	.308 (7.82)	.185 (4.70)	.420 (10.67)	.250 (6.35)	.130 (3.30)
MDM-15SCBR*	.935 (23.75)	.715 (18.16)	.552 (13.97)	.308 (7.82)	.253 (6.43)	.420 (10.67)	.250 (6.35)	.130 (3.30)
MDM-21PCBR*	1.085 (27.56)	.865 (21.97)	.634 (16.10)	.308 (7.82)	.185 (4.70)	.420 (10.67)	.250 (6.35)	.130 (3.30)
MDM-21SCBR*	1.085 (27.56)	.865 (21.97)	.702 (17.83)	.308 (7.82)	.253 (6.43)	.420 (10.67)	.250 (6.35)	.130 (3.30)
MDM-25PCBR*	1.185 (30.10)	.965 (24.51)	.734 (18.64)	.308 (7.82)	.184 (4.70)	.420 (10.67)	.250 (6.35)	.130 (3.30)
MDM-25SCBR*	1.185 (30.10)	.965 (24.51)	.802 (20.37)	.308 (7.82)	.253 (6.43)	.420 (10.67)	.250 (6.35)	.130 (3.30)
MDM-31PCBR*	1.335 (33.91)	1.115 (28.32)	.884 (22.45)	.308 (7.82)	.185 (4.70)	.520 (13.21)	.250 (6.35)	.130 (3.30)
MDM-31SCBR*	1.335 (33.91)	1.115 (28.32)	.952 (24.18)	.308 (7.82)	.253 (6.43)	.520 (13.21)	.250 (6.35)	.130 (3.30)
MDM-37PCBR*	1.485 (37.72)	1.265 (32.13)	1.034 (26.26)	.308 (7.82)	.185 (4.70)	.520 (13.21)	.250 (6.35)	.130 (3.30)
MDM-37SCBR*	1.485 (37.72)	1.265 (32.13)	1.102 (27.99)	.308 (7.82)	.253 (6.43)	.520 (13.21)	.250 (6.35)	.130 (3.30)
MDM-51PCBR*	1.435 (36.45)	1.215 (30.86)	.984 (24.99)	.351 (8.92)	.228 (5.79)	.650 (16.15)	.300 (7.62)	.150 (3.81)
MDM-51SCBR*	1.435 (36.45)	1.215 (30.86)	1.052 (26.72)	.351 (8.92)	.296 (7.52)	.650 (16.15)	.300 (7.62)	.150 (3.81)
MDM-100PCBR*	2.170 (55.12)	1.800 (45.72)	1.384 (35.15)	.394 (10.01)	.271 (6.88)	1.000 (25.40)	.400 (10.16)	.200 (5.08)
MDM-100SCBR*	2.170 (55.12)	1.800 (45.72)	1.508 (38.10)	.394 (10.01)	.394 (10.01)	1.000 (25.40)	.400 (10.16)	.200 (5.08)

*For jackpost, add letter "P" or "M7" for sizes 9-51, "M17" for size 100.

Micro-D Metal Shell Low Profile 0.50" Spacing MDLM



Our Micro-D Metal Shell Low Profile Connectors offer the flexibility and small profile that today's electronics systems demand. Using the dielectric footprint of Cannon's MD Series Connector and an aluminum shell designed to be a thinner, lower profile package, ITT Cannon engineers have developed a connector family that meets all of the performance criteria of the Cannon MDM and MIL-DTL-83513 Connectors. The Micro-D Metal Shell Low Profile Series is available in standard cable plugs and receptacles in contact sizes 9 through 51 positions. This family of connectors, like the original MDM series, features Cannon Twist Pin Contact Technology on 0.050 inch spacing.

Component Materials & Finishes

Material	6061-T6 Aluminum Alloy per QQ-A-200/8
Finishes (-A174)	Electroless nickel plate per SAE-AMS-C-26074, Class 4m .001-.0015 inch thick
Insulators (9-51)	Liquid Crystalline Polymer per MIL-M-24519, Type GLCP-30F
Contacts	Gold Plate per MIL-DTL-45204 .000050 inch thick min over Copper Alloy per SAE-AMS-2418 .000010 inch thick min.
Hardware	300 Series stainless steel, passivated
Float Mount Washer	400 Series stainless steel, passivated
Standard Epoxy	Hysol EE4215/HD3561, color: black

Mechanical Features

Coupling	Friction/Jackscrews
Polarization	Keystone-shaped shells
Contact Spacing Centers	.050 (1.27)
No. of Contacts	9 thru 51 signal
Wire Size (Standard)	#25 Solid Wire, #26 Standard Wire
Contact Termination	Multiple indent crimp

Test	Method	Criteria of Acceptance
Dielectric Withstanding Voltage	Method 3001: 600 VAC at sea level 150 VAC at 70,000 altitude	No breakdown No breakdown
Insulation Resistance	Method 3003	5,000 megaohms minimum
Thermal Shock	Method 1003, condition A: -55° C to +125° C	No physical damage
Physical Shock	Method 2004, Condition E: 50 G's, 3 axes, 6 milliseconds duration sawtooth pulse	No physical damage no loss of continuity > 1 μsec
Vibration	Method 2005, Condition IV: 20 G's, 10-2,000 Hz. 12 hrs.	No physical damage no loss of continuity > 1 μsec
Durability	500 cycles of mating and unmating, 500 CPH max	No mechanical or electrical defects
Moisture Resistance	Method 1002, Type II, omit steps 7a and 7b	Insulation resistance > 100 megaohms
Salt Spray	Method 1001, Condition B: 48 Hours	Shall be capable of mating and unmating, and meet contact resistance requirements
Contact Resistance MIL-STD-202	Method 1001, Condition B: at 3 amps at 1 milliamp	 8 milliohms maximum 10 milliohms maximum
Contact Retention	Per MIL-DTL-85313	5 lb. minimum axial load

Dimensions shown in mm
Specifications and dimensions subject to change

Micro-D Metal Shell Low Profile 0.50" Spacing MDLM

How to Order | Part Number Nomenclature – Slash Sheets 1-5, 10-27



MDLM - 25 P 6 P Y 18 L - A174

Series
MDLM - MDM Low Profile

Contact Arrangement
9, 15, 21, 25, 31, 37 & 51

Contract Type
P - Pin
S - Socket

Wire Gauge (AWG)
4 - #24 Gauge
6 - #26 Gauge (Standard)
8 - #28 Gauge
0 - #30 Gauge

Wire Type
P - Teflon(PTFE) Wire Per MIL-W-16878/4 (Standard)
T - Teflon(TFE) Wire Per MIL-W-22759/11
E - Cross-Linked Tefzel(ETFE) Wire Per MIL-W-22759/33
C - Custom Wiring

Wire Colour
W - White
Y - Yellow (Standard)
S - Color Coded pet MIL-STD-681, System 1
T - Ten Color Repeat
C - Custom Wire Coloring

Overall Wire Length (Inches)
1 Inch Minimum and Must be Rounded to the Nearest Whole Inch
Examples:
- 5 - 5 inches
- 18 - 18 inches
- 50 - 50 inches
- 120 - 120 inches

C - Custom Wire Lengths

Hardware

B	-	No hardware, Ø.091 Hole	Military Specification Hardware
A	-	No hardware, Ø.125 Hole	M2 - Jackscrew-low profile (Allen Head)
P	-	Jackpost	M3 - Jackscrew-standard profile (Allen Head)
K	-	Jackscrew-Standard	M5 - Jackscrew-low profile (Slotted Head)
L	-	Jackscrew-Low Profile	M6 - Jackscrew-standard profile (Slotted Head)
F	-	Float Mount	M7 - Jackpost

Shell Finish/Mod Codes
No Number- Electroless Nickel (RoHS Compliant)
A101 - Yellow Chromate/Cadmium over Nickel (Not RoHS Compliant)
A172 - Gold over Nickel (RoHS Compliant)
A141 - Irridite/Alodine (RoHS Compliant)
A30 - Black Anodize (RoHS Compliant)
(Consult Factory for all other Mod Codes)

Plug

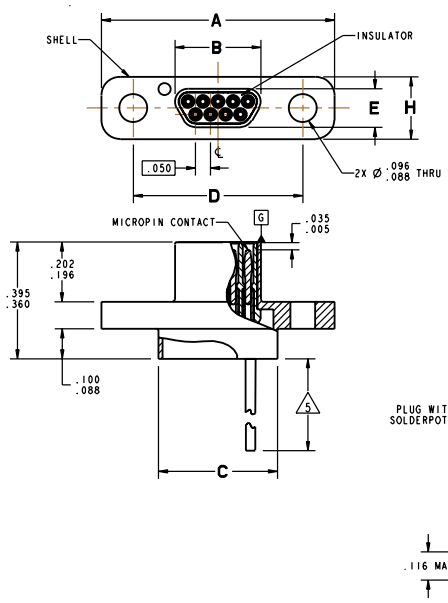

Receptacle

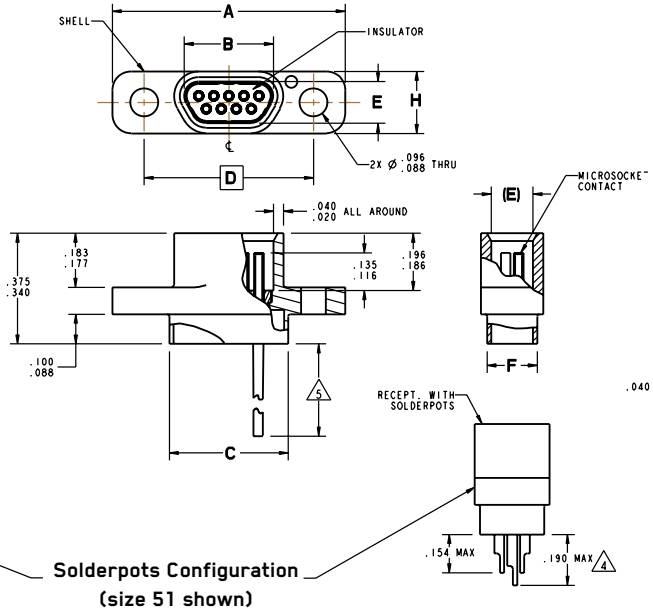

Solderpots Configuration
(size 51 shown)

Size	Plug Dimensions						
	A ± .010	B Max.	C +10/-18	D	E Max.	F ± .010	H Max.
-9P	.778	.2918	.398	.565	.1338	.173	.208
-15P	.928	.4418	.548	.715			
-21P	1.078	.5918	.698	.865			
-25P	1.178	.6918	.798	.965			
-31P	1.328	.8418	.948	1.115			
-37P	1.478	.9918	1.098	1.265			
-51P	1.428	.9418	1.048	1.215	.1768	.220	.250

Size	Receptacle Dimensions						
	A ± .010	B Max.	C +10/-18	D	E Max.	F ± .010	H Max.
-9S	.778	.2922	.398	.565	.1342	.173	.208
-15S	.928	.4222	.548	.715			
-21S	1.078	.5922	.698	.865			
-25S	1.178	.6922	.798	.965			
-31S	1.328	.8422	.948	1.115			
-37S	1.478	.9922	1.098	1.265			
-51S	1.428	.9422	1.048	1.215	.1772	.220	.250

Dimensions shown in mm
Specifications and dimensions subject to change

Standard Layouts

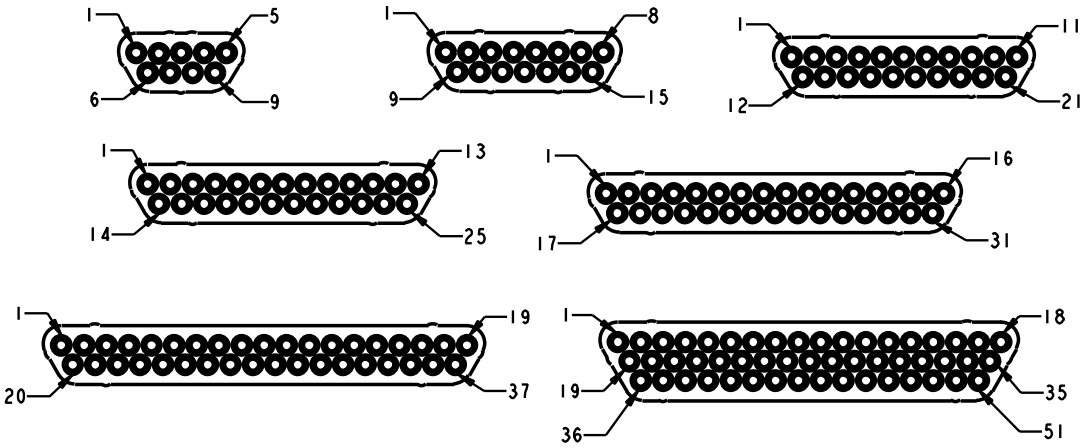

Panel Cutouts

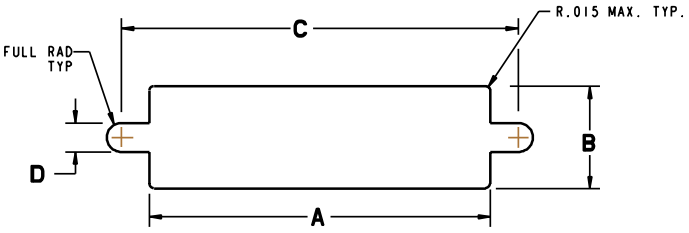

Front Mounting (Preferred)

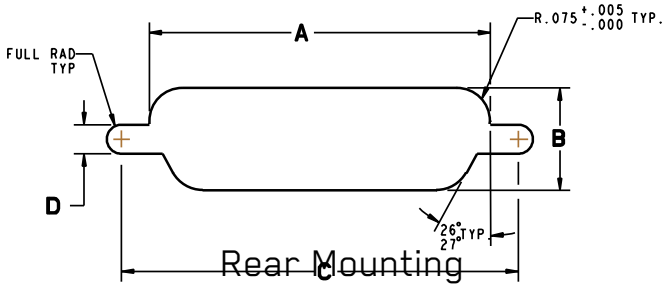

Rear Mounting

Cutout Dimensions					
Shell Size	Cutout Config.	A	B	C	D
-9	Front	.409	.172	.570	.089
	Rear	.379	.219		
-15	Front	.559	.172	.720	
	Rear	.529	.219		
-21	Front	.709	.172	.870	
	Rear	.679	.219		
-25	Front	.809	.172	.970	
	Rear	.779	.219		
-31	Front	.959	.172	1.120	
	Rear	.929	.219		
-37	Front	1.109	.172	1.270	
	Rear	1.079	.219		
-51	Front	1.059	.215	1.220	
	Rear	1.029	.261		

Mounting Hardware

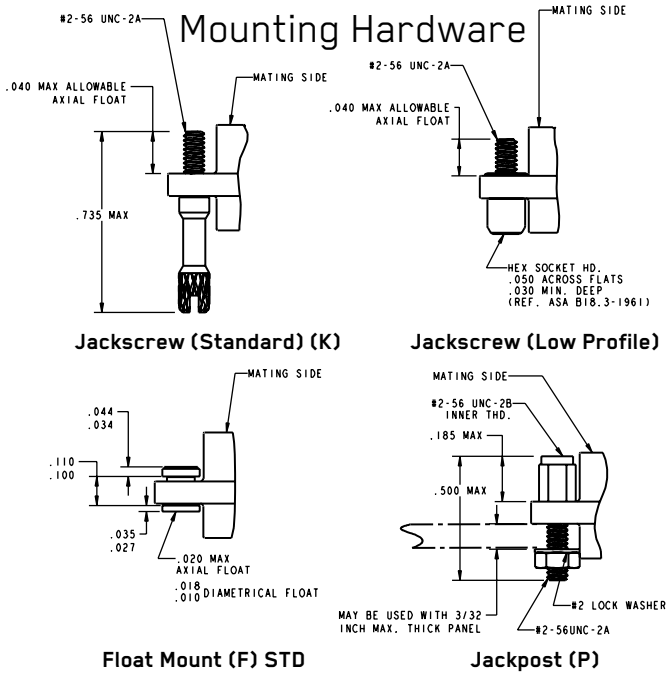

Jackscrew (Standard) (K) **Jackscrew (Low Profile)**

Float Mount (F) STD **Jackpost (P)**

Recommended American Standard Machine Screws for Connector Float Mounting

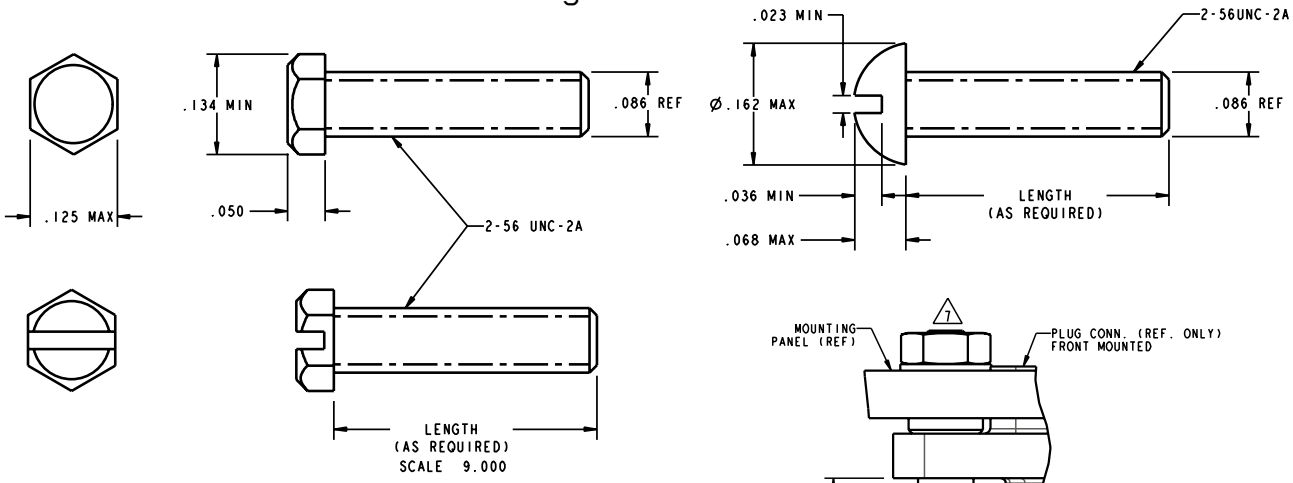

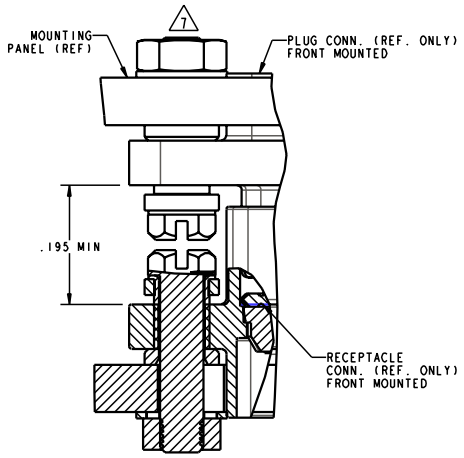

Float Mounting

Dimensions shown in mm
Specifications and dimensions subject to change

200˚C High Temp Micro-D

MDM-F222



With the increasing demand for more ruggedized interconnect solutions that can withstand extreme temperatures and operating conditions, our High Temp Micro-MDM F222 leads the industry with exceptional versatility and peformance. This highly engineered, highly reliable microminiature interconnect features Cannon Micro Twist Pin Technology and is qualification tested to withstand 200ºC continuous operating temperature for 500 hours.

Specifications & Options for 200˚C High Temp Micro-MDM F222

Configurations

- Terminations
  - Stranded wire
  - Solid wire
  - Solder pots
  - PCB
- Straight
- Right angle
- Condensed right angle
- Signal contacts: 9, 15, 21, 25, 31, 37, 51, 100

Electrical Wire Size

- Stranded wire:
  - 24 AWG thru 32 AWG
- Solid wire:
  - 25 AWG
- Solder pots:
  - 26 AWG or smaller
- PC tails:
  - 24 AWG

Material and Finishes

- Shell material
  - Aluminum alloy
- Shell plating
  - Electroless nickel
  - Yellow chromate /cadmium over nickel
- Insulator
  - Liquid crystal polymer per MIL-M-24519, type GLCP-30F
- At temperatures above 175˚C, yellow chromate over cadmium can cause shell discoloration and deterioration of the chromate conversion coating.

Hardware Configurations

Commercial		Per MIL-DTL-83513	
Code	Description	Code	Description
A	No hardware (.125 dia. hole for sizes 9-51 &.166 dia. hole for size 100")		**Size 9-51**
B	No hardware (standard) (.091 dia. hole for size 9-51 & .120 dia. hole for size 100)	M2	Jackscrew-low profile (allen head)
B1	No hardware (.1475 dia. hole for size 100)	M3	Jackscrew-standard profile (allen head)
F	Float mount	M5	Jackscrew-low profile (slotted head)
K	Jackscrew-standard profile	M6	Jackscrew-standard profile (slotted head)
L	Jackscrew-low profile	M7	Jackpost
P	Jackpost		**Size 100**
S	Clinch Nut	M12	Jackscrew-low profile (allen head)
	PCB Only	M13	MDM-BT-25TE-SJS
R1	Rear Panel Mount Jackpost, .032" Panel	M15	
R2	Rear Panel Mount Jackpost, .047" Panel	M16	
R3	Rear Panel Mount Jackpost, .062" Panel	M17	Jackpost
R4	Rear Panel Mount Jackpost, .093" Panel		
R5	Rear Panel Mount Jackpost, .125" Panel		

Termination Modification Codes

Stranded Teflon® Wire per MIL-W-16878/4 (H)			Solid Uninsulated Wire (L)	
Length	All Yellow	Color Coded	Termination Code	Length
3 (76.2)	H020	H027	L61	.125 (3.18)
6 (152.4)	H019	H016	L56	.150 (3.81)
8 (203.2)	H026	H034	L57	.190 (4.83)
10 (254.0)	H029	H025	L39	.250 (6.35)
12 (304.8)	H028	H002	L58	.375 (9.52)
18 (457.2)	H001	H003	L1	.500 (12.70)
20 (508.0)	H038	H023	L14	.750 (19.05)
24 (609.6)	H009	H004	L2	1.000 (25.40)
30 (762.0)	H010	H005	L7	1.500 (38.10)
36 (914.4)	H011	H006	L6	2.000 (50.80)
48 (1219.2)	H013	H048	L16	2.500 (63.50)
72 (1828.8)	H017	H046	L10	3.000 (76.20)
120 (3048.0)	H042	H041		

The above termination MODs are the most frequently ordered. For additional codes please see pp. 74-76

Dimensions shown in mm

Specifications and dimensions subject to change

200˚C High Temp Micro MDM F222

How to Order | Wired & Solder Pot

Wired & Solder Pot

R - MDM - 25 - P - H - 003 - M2 - A174 - F222

RoHS Compliance	
Series	MDM - Micro-D Metal Shell
Contact Arrangement	9, 15, 21, 25, 31, 37, 51 & 100
Contact Type	**P** - Pin / **S** - Socket
Termination Type	**H** - Insulated Stranded Wire, **L** - Uninsulated Stranded Wire, **S** - Solderpot
Termination Modified Code	See Termination Modification table for Harness Types (H) & Solid Uninsulated Types (L)
Hardware	Commercial A, B, B1, F, K, L, P, S Military M2, M3, M5, M6, M7, M12, M13, M15, M16, M17
Shell Finish / MOD Codes*	*Blank - Yellow Chromate/Cadmium (Not RoHS Compliant), A174 - Electroless Nickel (RoHS Compliant)
High Temperature	F222

PCB

R - MDM - 25 - P - BR - P - T - L39 - A174 - F222

RoHS Compliance	
Series	MDM - Micro-D Metal Shell
Contact Arrangement	9, 15, 21, 25, 31, 37, 51 & 100
Contact Type	**P** - Pin / **S** - Socket
Termination Type	**BS** - Straight, **BR** - Right Angle, **CBR** - Condensed Right Angle
Hardware	Commercial A, B, B1, P, R1, R2, R3, R4, R5 Military M7, M17
Mounting Hardware for PCB	**T** - Threaded Insert, No Letter - Thru-Hole
Length MOD Code	See Termination Modification table for Solid Uninsulated Types (L)
Shell Finish / MOD Codes*	*Blank - Yellow Chromate/Cadmium (Not RoHS Compliant), A174 - Electroless Nickel (RoHS Compliant)
High Temperature	F222

230°C Ultra-High Temp Micro MDM F300

How to Order | Part Number Configurator



The Ultra-High Temp Micro-MDM series is qualification tested to withstand 230°C continuous operating temperature for 500 hours and meets the harsh requirements of the Oil and Gas exploration industries. Cannon's Ultra-High Temp Micro-MDM F300 connector is designated by an F300 modification code and uses high performance Micro Twist Pin Contacts, special insulating materials and high temperature wire.

MDM	-	25	P	R	003	L	-	F300

Series

MDM - MD Metal Shell

Contact Arrangement

9, 15, 21, 25, 31 & 37

Contact Type

P - Pin / **S** - Socket

Termination Type

R - Insulated Standards Wire / **S** - Solder Pot

Termination Modifier Code

(Consult Factory for all 'R', 'T' and 'U' Mod Codes for Lead Material and Length)

Hardware

P - Jackpost

R1 - Rear Panel Mount Jackpost .032" Panel

R2 - Rear Panel Mount Jackpost .047" Panel

R3 - Rear Panel Mount Jackpost .062" Panel

R4 - Rear Panel Mount Jackpost .093" Panel

R5 - Rear Panel Mount Jackpost .125" Panel

K - Jackscrew-Standard Profile

L - Jackscrew-Low Profile

K - Jackscrew-Standard Profile

L - Jackscrew-Low Profile

F - Float Mount

B - No hardware (Standard)
.091 dia. hole for sizes 9-51
.120 dia. hole for size 100

A - No hardware
.125 dia. hole for sizes 9-51
.166 dia. hole for size 100

B1 - No hardware
.1475 dia. hole for size 100
(Per MIL-DTL-83513)

S - Clinch Nut

Hardware per MIL-DTL-83513/5:
Size 9-25:

M2 - Jackscrew-low profile (Allen Head)

M3 - Jackscrew-standard profile (Allen Head)

M5 - Jackscrew-low profile (Slotted Head)

M6 - Jackscrew-standard profile (Slotted Head)

M7 - Jackpost

Shell Finish / MOD Codes

F300 - Stainless Steel Passivated Only

High-Temp Wires | Callouts

M22759/87-26-9

Length	Yellow	White	10-Color Repeat	System 1
1	030	R30	T30	U30
2	024	R24	T24	U24
3	020	R20	T20	U20
4	-	R33	T33	U33
5	031	R31	T31	U31
6	019	R65	T19	072
8	026	R26	T26	U26
9	015	R15	T15	U15
10	029	R29	T29	U29
12	028	R66	T28	073
16	029	R39	T39	U39
17	036	R36	T36	U36
18	001	R67	T01	074
20	038	R38	T38	U38
21	055	R55	T55	U55
24	009	R68	T09	075
30	010	R10	T10	U10
35	018	R18	T18	U18
36	011	R69	T11	076
40	037	R37	T37	U37
42	012	R12	T12	U12
48	013	R70	T13	077
50	040	R40	T40	U40
60	014	R14	T14	U14
72	017	R71	T17	078
80	032	R32	T32	U32
92	022	R22	T22	U22
96	035	R35	T35	U35
120	042	R42	T42	U42
180	043	R43	T43	U43

Accessories

Shielded metal backshell

A single piece, machined aluminum shell for ITT Cannon MDM connectors. Cable braid can be fixed to the shell with the band-it strap (supplied with the backshell) to give a shielded termination. Stainless steel mounting hardware, either jackposts or low profile jack screws, comes with the backshell.

MATERIALS AND FINISHES

Backshell Material	Aluminum
Backshell Finish	Electroless Nickel or Yellow Chromate over Cadmium
Hardware Material	Stainless Steel

Micro Metal Backshell
for MDM Connectors

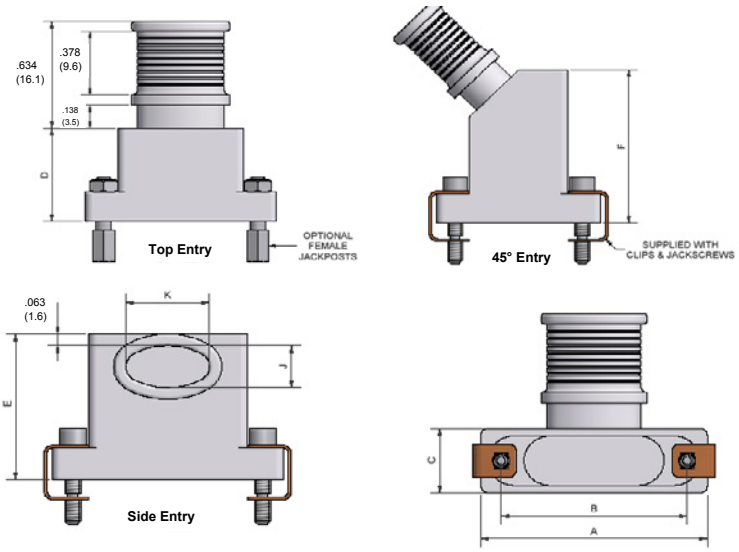

Shell Size	A	B	C	D	E	F	Styles TE & SE		Style AE	
							J	K	J	K
9	0.776 (19.7)	0.565 (14.4)	0.354 (9.0)	0.394 (10.0)	0.591 (15.0)	0.827 (21.0)	0.228 (5.8)	0.276 (7.0)	0.189 (4.8)	0.189 (4.8)
15	0.921 (23.4)	0.715 (18.2)	0.354 (9.0)	0.472 (12.0)	0.650 (16.5)	0.906 (23.0)	0.228 (5.8)	0.425 (10.8)	0.189 (4.8)	0.189 (4.8)
21	1.075 (27.3)	0.865 (22.0)	0.354 (9.0)	0.551 (14.0)	0.709 (18.0)	0.984 (25.0)	0.228 (5.8)	0.425 (10.8)	0.228 (5.8)	0.276 (7.0)
25	1.175 (29.9)	0.965 (24.5)	0.354 (9.0)	0.630 (16.0)	0.787 (20.0)	1.063 (27.0)	0.228 (5.8)	0.598 (15.2)	0.228 (5.8)	0.425 (10.8)
31	1.327 (33.7)	1.115 (28.3)	0.354 (9.0)	0.669 (17.0)	0.827 (21.0)	1.102 (28.0)	0.228 (5.8)	0.598 (15.2)	0.228 (5.8)	0.425 (10.8)
37	1.476 (37.5)	1.265 (32.1)	0.354 (9.0)	0.709 (18.0)	0.866 (22.0)	1.142 (29.0)	0.228 (5.8)	0.791 (20.1)	0.228 (5.8)	0.598 (15.2)
51	1.421 (36.1)	1.215 (30.9)	0.394 (10.0)	0.748 (19.0)	0.906 (23.0)	1.181 (30.0)	0.268 (6.8)	0.898 (22.8)	0.268 (6.8)	0.697 (17.7)
100	2.165 (55.0)	1.800 (45.7)	0.433 (11.0)	0.827 (21.0)	0.984 (25.0)	1.496 (38.0)	0.307 (7.8)	.024 (26.0)	0.307 (7.8)	1.024 (26.0)

MDM-BT - 15 TE - SJS - CAD - ***

Band Tied Backshell

Shell Size

Cable Entry
TE = Top entry
AE= Angles (45°) entry
SE = Side entry

Hardware
SJS = Spring clips and jackscrews
JP = jackposts

Planting
Blank - Electroless nickel
CAD - Yellow chromate over cadmium

Modification Code
Smaller cable entry - Consult factory

Rev	Size	Part Number	Nomenclature	RoHS Code
-	9	980-0011-38	MDM-BT-9TE-SJS-CAD	NTC
-	9	980-0011-39	MDM-BT-9TE-SJS	ROH
-	15	980-0011-40	MDM-BT-15TE-SJS-CAD	NTC
-	15	980-0011-36	MDM-BT-15TE-SJS	ROH
-	21	980-0011-41	MDM-BT-21TE-SJS-CAD	NTC
-	21	980-0011-42	MDM-BT-21TE-SJS	ROH
-	21	980-0011-53	MDM-BT-21SE-SJS-CAD	NTC
-	25	980-0011-48	MDM-BT-25TE-SJS-CAD	NTC
-	25	980-0011-37	MDM-BT-25TE-SJS	ROH
-	25	980-0011-54	MDM-BT-25SE-SJS-CAD	NTC

Rev	Size	Part Number	Nomenclature	RoHS Code
-	31	980-0011-55	MDM-BT-31SE-SJS-CAD	NTC
-	31	980-0011-44	MDM-BT-31TE-SJS-CAD	NTC
-	31	980-0011-45	MDM-BT-31TE-SJS	ROH
-	37	980-0011-35	MDM-BT-37TE-SJS-CAD	NTC
-	37	980-0011-46	MDM-BT-37TE-SJS	ROH
-	51	980-0011-47	MDM-BT-51TE-SJS-CAD	NTC
-	51	980-0011-43	MDM-BT-51TE-SJS	ROH
-	51	980-0011-50	MDM-BT-51TE-SJS	ROH
-	100	980-0011-51	MDM-BT-100TE-SJS	ROH

Dimensions shown in mm
Specifications and dimensions subject to change

Micro-D Metal Shell - .050" Contact Spacing | MIL-DTL-83513

How to Order | Part Number Nomenclature – Slash Sheets 1-5, 10-27



M83513/	01	-	H100	**	****

Series

MDM - Metal Shell, Liquid Crystal Polymer (LCP)
MDB - Diallyl Phthalate Insulator
MDVB - Polyester Insulator
-

MIL-DTL-83513 Slash Sheet

01 - Plug, Connector, Solderpot
02 - Receptacle, Connector, Solderpot
03 - Plug, Connector, Crimp Type
04 - Receptacle, Connector, Crimp Typet
} Metal Shell
05 - Hardware Only ⚠

Insert Arrangements

METAL SHELL

A - 9 Contact
B - 15 Contact
C - 21 Contact
D - 25 Contact
E - 31 Contact
F - 37 Contact
G - 51 Contact
H - 100 Contact

Wire Type

No Number - For Solderpot
01 - 18" long, #26 AWG per MIL-W-22759/11-26-9 (all white)
02 - 36" long, #26 AWG per MIL-W-22759/11-26-9 (all white)
03 - 18" long, #26 AWG per MIL-W-22759/11-26 Color Coded per MIL-STD-681, System 1, 10 colors repeating ⚠6
04 - 36" long, #26 AWG per MIL-W-22759/11-26-Color Coded per MIL-STD-681, System 1, 10 colors repeating ⚠6
05 - .5" long. #25 AWG, type S per QQ-W-343, Gold Plated
06 - 1.0" long, #25 AWG, type S per QQ-W-343, Gold Plated
07 - .5" long, #25 AWG, type S per QQ-W-W-343, Tin Plated
08 - 1.0" long, #25 AWG, type S per QQ-W-343, Tin Plated
09 - 18" long, #26 AWG per MIL-W-22759/33-26-9 (all white) ⚠3
10 - 36" long, #26 AWG per MIL-W-22759/33-26-9 (all white) ⚠3
11 - 18" long, #26 AWG per MIL-W-22759/33-26 Color Coded per MIL-STD-681, System 1, 10 colors repeating ⚠3 ⚠6
12 - 36" long, #26 AWG per MIL-W-22759/33-26 Color Coded per MIL-STD-681, System 1, 10 colors repeating ⚠3 ⚠6
13 - 72" long, #26 AWG per MIL-W-22759/11-26-9 (all white)
14 - 72" long, #26 AWG per MIL-W-22759/11-26 ⚠3 ⚠6
15 - 72" long, #26 AWG per MIL-W-22759/33-26-9 (all white)
16 - 72" long, #26 AWG per MIL-W-22759/33-26 Color Coded per MIL-STD-681, System 1, 10 colors repeating ⚠3 ⚠6

Shell Finish

C - for Cadmium/Yellow chromate over nickels
N - A174 - Electroless Nickel A174

NOTE:
1 - For every Mil Spec Part Number, ITT has one corresponding part number shown an example
2 - Tolerance on wire lengths: 18", 36" and 72" long — +1.00"/-0.00" .5" and 1.00" — + .200"/-.000"
⚠3 - For space application, connector shell finish must be "A174" and wire must be per MIL-W-22759/33-26.
4 - Any deviations to these P/N's will result in assignment of a special P/N, consult factory.
⚠6 - Color coding in accordance with MIL-STD-681, System 1, no parenthesis. See pages 80-81 for color code chart.
⚠ - For mounting hardware to Military Specification (sizes 9 to 100) see page 16.

Micro-D Metal Shell - .050" Contact Spacing | MIL-DTL-83513

How to Order | Part Number Nomenclature – Slash Sheets 1-5, 10-27



M83513/	10	-	A	**	C	*

Series
Connector, Electrical, Rectangular
Microminiature, Polarized Shell
PC Board Mounting

MIL-DTL-83513 Slash Sheet

10	-	Connector, Plug, Condensed Board Right Angle (CBR), Sizes 9 – 37
11	-	Connector, Plug, CBR, Size 51
12	-	Connector, Plug, CBR, Size 100
13	-	Connector, Receptacle, CBR, Sizes 9 – 37
14	-	Connector, Receptacle, CBR Size 51
15	-	Connector, Receptacle, CBR, Size 100
16	-	Connector, Plug, Board Right Angle (BR), Sizes 9 – 37
17	-	Connector, Plug, BR, Size 51
18	-	Connector, Plug, BR, Size 100
19	-	Connector, Receptacle, BR, Sizes 9 – 37
20	-	Connector, Receptacle, BR Size 51
21	-	Connector, Receptacle, BR Size 100
22	-	Connector, Plug, Board Straight (BS), Sizes 9 – 37
23	-	Connector, Plug, BS, Size 51
24	-	Connector, Plug, BS, Size 100
25	-	Connector, Receptacle, BS, Sizes 9 – 37
26	-	Connector, Receptacle, BS, Size 51
27	-	Connector, Receptacle, BS Size 100

Insert Arrangements
METAL SHELL

A	-	9 Contact
B	-	15 Contact
C	-	21 Contact
D	-	25 Contact
E	-	31 Contact
F	-	37 Contact
G	-	51 Contact
H	-	100 Contact

Wire Type

01	-	.109" long, #24 AWG solid copper wire per QQ-W-343, Type "S", solder dipped
02	-	.140" long, #24 AWG solid copper wire per QQ-W-343, Type "S", solder dipped ⚠
03	-	.172" long, #24 AWG solid copper wire per QQ-W-343, Type "S", solder dipped

Shell Finish

C	-	Cadmium / Yellow chromate over nickel
N	-	Electroless Nickel ⚠⚠

HARDWARE

N	-	No jackpost
P	-	Jackpost (permanently attached)
T	-	Threaded insert
W	-	Jackpost and Threaded insert

NOTE:
1 - For every Mil Spec Part Number, ITT has one corresponding part number
⚠ - Tolerance on wire lengths: 18", 36" and 72" long — +1.00"/-0.00" .5" and 1.00" — + .200"/-.000"
⚠ - For space application, connector shell finish must be "A174" and wire must be per MIL-W-22759/33-26.
4 - Any deviations to these P/N's will result in assignment of a special P/N, consult customer service.

Dimensions shown in mm
Specifications and dimensions subject to change

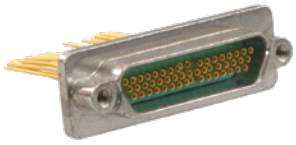

Our MDMH Hermetic Microminiature Connectors are ideal for applications that require more robust sealing than can be achieved with epoxy resins. The MDMH uses size 24 AWG contacts that are compression glass sealed through a steel shell and into a diallyl pthalate front-end insulator. When mated, an interfacial seal provides environmental protection. We recommend MDMH Hermetic receptacles be soldered to the chassis or container for a completely leak-proof joint. MDMH Hermetic receptacles mate with standard MDM plugs.

Specifications

Standard materials & finishes

Shell	Mild steel, tin-lead plated
Insulator	Glass filled diallyl phthalate per MIL-M-14. Type SDGF
Contacts	Copper alloy, gold plated sockets on mild steel gold plated pins. Solder pots - mild steel gold plated
Hermetic seal	Compression glass
Leak rate	1 micron cubic ft/hr max (1.04 x 10-5 cc/sec at 1 ATM pressure differential)
ELECTRICAL DATA	
No. of contacts	9 to 100
Dielectric withstanding voltage	150 VAC
Insulation resistance	5000 Mohm minimum
Wire size	#26 through #30 AWG
Contact termination	Solder pot
MECHANICAL FEATURES	
Size or length	8 sizes
Service class	Hermetically sealed
Coupling	Friction/jacks
Polarization	Keystone shaped shells
Contact spacing	.050 (1.27) centers
Shell style	Receptacle, solder mount

How to Order

MDMH - 51 S S

Hermetic Micro D Receptacle Series

Contact layout 9, 15, 21, 25, 31, 37, 51, 100

Socket Contacts (only)

Termination type

Contact Arrangements

Face vew of socket insert - use reverse order for wiring side.

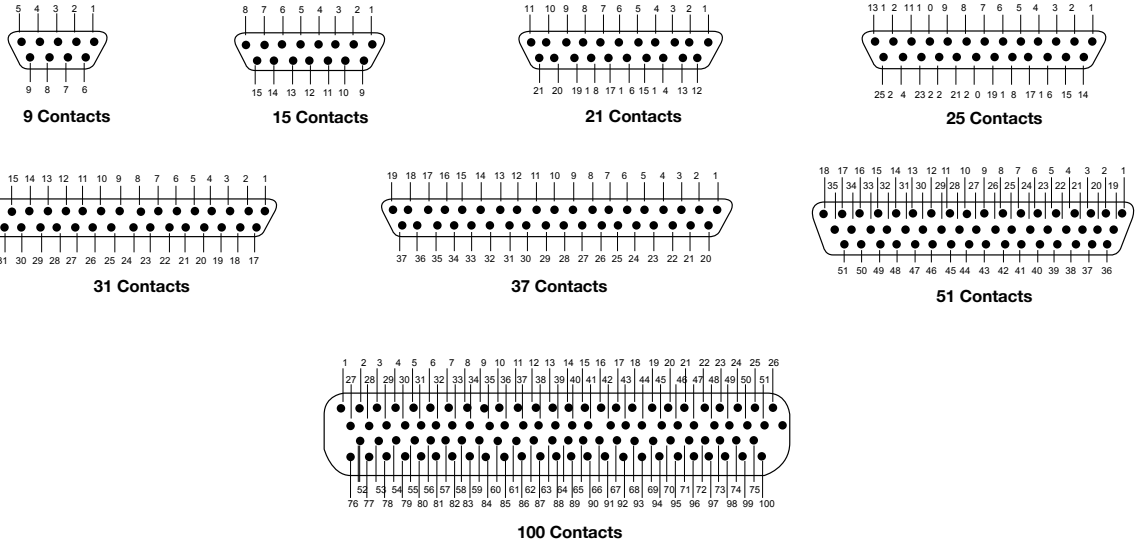

Contact identification numbers are for reference only and do not appear on insulator or connector body.

Shell Dimensions

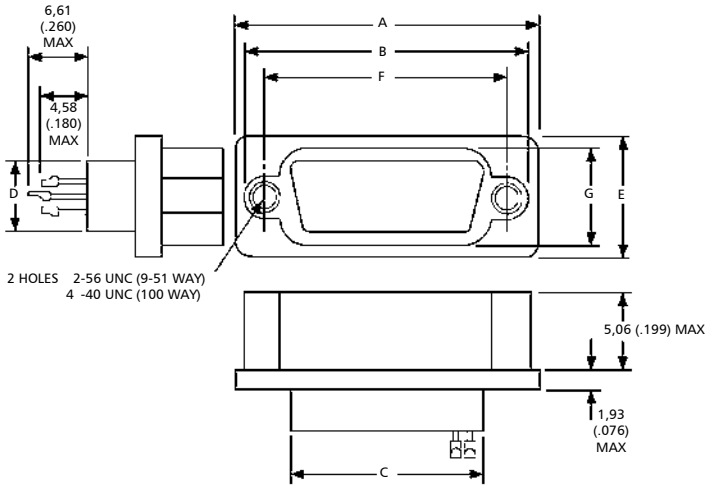

Part Number By Shell Size	A Max.	B Max.	C Max.	D Max.	E Max.	F ±.005 (0,13)	G Max.
MDMH-9S	.885 (22,48)	.738 (18,74)	.400 (10,16)	.270 (6,86)	.430 (10,92)	.565 (14,35)	.261 (6,63)
MDMH-15S	1.035 (26,29)	.888 (22,55)	.550 (13,97)	.270 (6,86)	.430 (10,92)	.715 (18,16)	.261 (6,63)
MDMH-21S	1.185 (30,10)	1.038 (26,36)	.770 (17,78	.270 (6,86)	.430 (10,92)	.865 (21,97)	.261 (6,63)
MDMH-25S	1.285 (32,64)	1.137 (28,87)	.800 (20,32)	.270 (6,86)	.430 (10,92)	.965 (24,51)	.261 (6,63)
MDMH-31S	1.435 (36,45)	1.288 (32,72)	.950 (24,13)	.270 (6,86)	.430 (10,92)	1.115 (28,32)	.261 (6,63)
MDMH-37S	1.585 (40,26)	1.438 (36,53)	1.100 (27,94)	.270 (6,86)	.430 (10,92)	1.265 (32,13)	.261 (6,63)
MDMH-51S	1.535 (38,99)	1.388 (35,26	1.050 (26,67)	.310 (8,00)	.473 (12,01)	1.215 (30,86)	.315 (8,00)
MDMH-100S	2.275 (57,78)	2.078 (52,78)	1.455 (36,97)	.365 (9,27)	.522 (13,26)	1.800 (45,72)	.410 (10,41)

Dimensions shown in mm
Specifications and dimensions subject to change



Our TMDM Filtered Microminiature Connectors feature transverse monolith filters for noise reduction and EMI, RFI and EMP shielding. These high performance connectors feature a ruggedized, one-piece aluminum shell and are ideally suited for commerical aerospace, military avionics and military equipment applications. The TMDM Filtered Micro is designed with Cannon's own Twist Pin Contact System and is environmentally sealed. The TMDM receptacle accommodates from 8 to 37 sizes, 24 AWG socket contacts on 1.27 (.050) centers and mates with standard MDM Microminiature Connector plugs.

Specifications

Standard materials & finishes

Shell	Aluminum alloy per QQ-A-200/8 with electroless nickel finish per QQ-N-290
Insulator	Glass filled diallyl phthalate per MIL-M-14. Type SDGF
Contact, socket	Copper alloy, 50 microinch gold per MIL-G-45204, Type II, Class I
Interfacial seal	Silicone base rubber
ELECTRICAL DATA	
No. of contacts	9 to 37
Dielectric withstanding voltage	300 VAC
Insulation resistance	5000 Mohm at 100 VDC
Voltage rating (working)	100 VDC
Current rating	3 amps max.
Maximum capacitance	250, 500, 1000, 2000 picofarads
Filter type	C
MECHANICAL FEATURES	
Size or length	6 sizes
Coupling	Friction/jackscrews
Polarization	Keystone shaped shell
Contact spacing	.050 (1.27) centers
Shell style	Single piece receptacle

How to Order

TMDM	-	C1	15	S	H	001	B-	*

- **Series**
- **Filter type**
- **Number of contacts**
- **Contact style**
- **Termination type**
- **Termination/modifier code**
- **Mounting code**
- **Modification code**

Series
Filter TMDM - Micro "D" - Metal housing

Contact Arrangements
"C" capacitor type
C1 150 - 250 pF capacitance
C2 300 - 500 pF capacitance
C3 700 - 1000 pF capacitance
C4 1300 - 2000 pF capacitance

Number of contacts
9, 15, 21, 25, 31, 37 only

* No number = Electroless Nickel A172 - Gold over Nickel

Contact style
S - socket (receptacle)
P - Pin (plug)

Termination code*
H - harness, insulated solid or stranded wire
L - lead, solid uninsulated wire

Termination
Consult standard wire termination code for lead material and lead length

Mounting code
A - Flange mounting, Ø.125 (3,18) mounting holes
B - Flange mounting, Ø.092 (2,34) mounting holes
L - Low profile (slotted head)
M2 - Allen head jackscrew assembly, low profile
M3 - Allen head jackscrew assembly, high profile
M5 - Slot head jackscrew assembly, low profile
M6 - Slot head jackscrew assembly, high profile
M7 - Jacknut assembly
P - Jackpost

Modification code
Shell finish MOD. Codes. *
To be assigned as required

Dimensions shown in mm
Specifications and dimensions subject to change

Guaranteed Minimum Attenuation

Filter designation	Capacitance range (pF)	Minimum Insertion Loss-decibels							
		10 MHz	15 MHz	30 MHz	50 MHz	100 MHz	200 MHz	500 MHz	1 GHz
C1	150 - 250				4	6	15	20	35
C2	300 - 500			3	6	12	18	25	40
C3	700 - 1000		3	7	13	17	25	38	48
C4	1300 - 2000	5	8	13	18	23	30	40	50

Standard Wire Termination Codes

Cannon Modification Codes – (Not Mil Spec)
The following termination codes are listed for your information. For additional codes please refer to Appendix on pp. 74-76. All wire lengths are minimum.

Harness Type (H) #26 AWG per
MIL-W-16878/4 Type E Teflon, stranded

Length		All Yellow	Color Coded
3	(76.2)	H020	H027
6	(152.4)	H019	H016
8	(203.2)	H026	H034
10	(254.0)	H029	H025
12	(304.8)	H028	H002
18	(457.2)	H001	H003
20	(508.0)	H038	H023
24	(509.6)	H009	H004
30	(762.0)	H010	H005
36	(914.4)	H011	H006
48	(1219.2)	H013	H048
72	(1828.8)	H017	H046
120	(1828.8)	H042	H041

Solid Uninsulated Type (L)
#25 AWG gold plated copper.

Code	Length	
L61	.125	(.18)
L56	.150	(3.81)
L57	.190	(4.83)
L39	.250	(5.35)
L58	.375	(9.52)
L1	.500	(12.70)
L14	.750	(19.05)
L2	1.000	(25.40)
L7	1.500	(38.10)
L6	2.000	(50.80)
L6	2.500	(63.50)
L10	3.000	(76.20)

Shell Dimensions

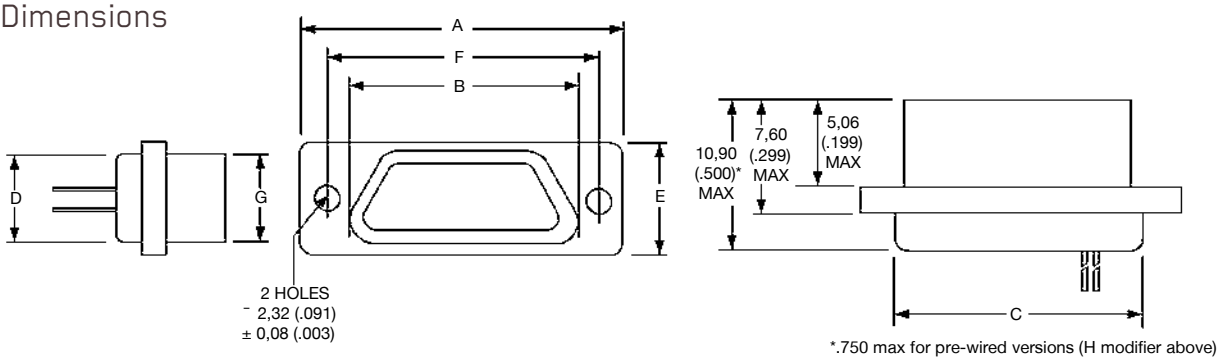

*.750 max for pre-wired versions (H modifier above)

Part Number By Shell Size	A Max.	B Max.	C Max.	D Max.	E Max.	F ±0,13 (.005)	G Max.
MDMT-9S*	.785 (19,94)	.400 (10,16)	.400 (10,16)	.270 (6,86)	.308 (7,83)	.565 (14,36)	.251 (6,38)
MDMT-15S*	.935 (23,75)	.550 (13,97)	.550 (13,97)	.270 (6,86)	.308 (7,83)	.715 (18,17)	.251 (6,38)
MDMT-21S*	1.085 (27,60)	.700 (17,78)	.770 (17,78	.270 (6,86)	.308 (7,83)	.865 (21,98)	.251 (6,38)
MDMT-25S*	1.185 (30,10)	.800 (20,32)	.800 (20,32)	.270 (6,86)	.308 (7,83)	.965 (24,52)	.251 (6,38)
MDMT-31S*	1.335 (33,90)	.950 (24,13)	.950 (24,13)	.270 (6,86)	.308 (7,83)	1.115 (28,30)	.251 (6,38)
MDMT-37S*	1.485 (37,70)	1.100 (28,00)	1.100 (28,00)	.270 (6,86)	.308 (7,83)	1.265 (32,20)	.251 (6,38)

Dimensions shown in mm
Specifications and dimensions subject to change

Typical Filter Performance

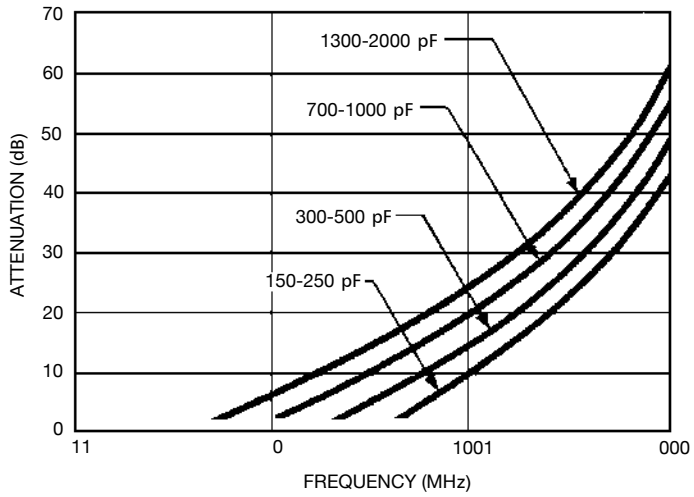

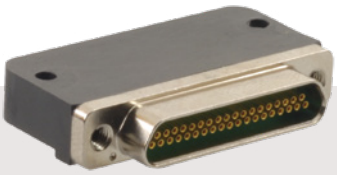

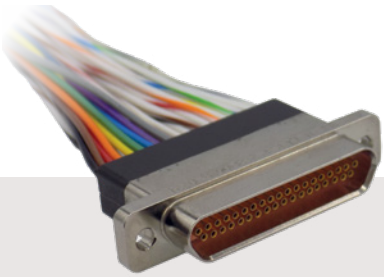

Micro-D Plastic Shell - .050" Contact Spacing MD**



Cannon MD** Microminiature Solutions are used in applications requiring highly reliable, extremely small and lightweight interconnects. They are available in two insulator materials, two mounting variations, seven shell sizes accommodating from 9 to 51 contacts and a special arrangement of five micro contacts and two coaxials. The insulator materials give the Cannon MD** connector wide versatility in most applications. They can also terminate a wide variety of stranded or solid wire directly to Micro-D contacts, which is often desirable in high density arrangements. MD** Connectors can also be custom harnessed to meet any customer requirement.

Specifications

MATERIALS AND FINISHES

Shell/Insulator (One Piece)	MD/MDB: Glass-filled thermoset plastic MDV/MDVB: Thermoplastic
Contacts	- Copper alloy, gold plate

ELECTRICAL DATA

No of Contacts	- 9 to 51: (1 arrangement of 5 contacts and 2 coaxials - for screw mount only)
Coaxial Cable	- RG-178/U (Not available for MD clip mount)
Wire Size	- #24 thru #32 AWG
Contact Termination	- Multi-indent crimp

MECHANICAL FEATURES

Size or Length	- 7 sizes
Coupling	- Friction/jackscrews
Polarization	- Keystone-shaped shells
Contact Spacing Centers	- .050 (1.27mm)
Shell Styles	- Plug and receptacle

Consult factory for availabilty.

Micro-D Plastic Shell - .050" Contact Spacing MD**

How to Order (PCB ordering information page 21)

R	MD**	1-	9	P	H	001	P

RoHS Compliance
Series-Insulator Style-Material
Contact Spacing
Contact Arrangement
Contact Type
Termination Type
Termination Code
Locking Hardware

Series-Insulator Style-Material
MDB - Screw mounting-Diallyl phthalate
MDVB - Screw mounting-Polyester

Contact Spacing
1 - .050 (1.27) centers

Contact Arrangements
9-15-21-25-31-37-51. See page 12

Contact Type
P - Pin
S - Socket

Termination Type
H - Insulated solid or stranded wire
L - Uninsulated solid wire
S - Solder pot to accept #26 AWG max. harness wire

Termination Code
See page 79-80 for additional codes
(H) 001 - 18", 7/34 strand, #26 AWG, MIL-W-16878/4, Type E Teflon, Yellow.
(H) 003 - 18", 7/34 strand, #26 AWG, MIL-W-16878/4, Type E Teflon, color coded to MIL-STD-681 System I.
(L) 1 - 1/2" uninsulated solid #25 AWG gold plated copper.
(L) 2 - 1"uninsulated solid #25 AWG gold plated copper.

Locking Hardware (Screw Mounting Only)
P - Jackpost
K - Jackscrew-standard
L - Jackscrew-low profile
F - Float mount
M - Military specification hardware, see page 16.

No designator - No hardware - standard mounting .091 (2.31) hole diameter

RoHS COMPLIANT PART NUMBERS

Micro-D Plastic Shell - .050" Contact Spacing MDB/MDVB

With Screw Mounting Holes (Conforms to MIL-DTL-83513)





MDB Glass-filled Diallyl Phthalate Plastic Insulator

MDVB Glass-filled Polyester Plastic Insulator

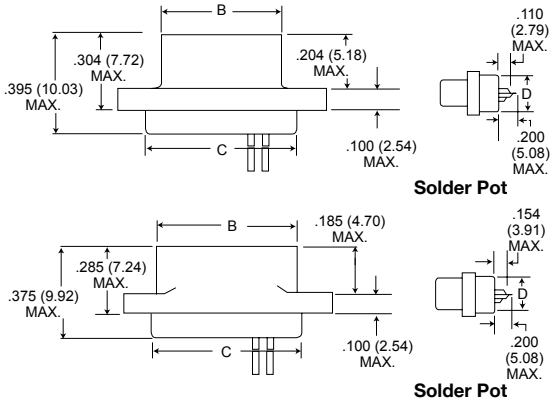

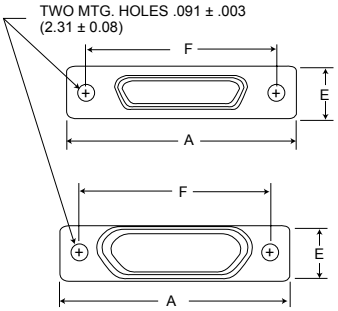

Part Number by Shell Size		A Max.	B Max.	C Max.	D Max.	E Max.	F ±0,13 (.005)	Avg. Weight*** ±5% (oz.) ±5% (gm.)
MDB1-9P**	MDVB1-9P**	.788 (20.02)	.292 (7.42)	.408 (10.36)	.173 (4.39)	.218 (5.54)	.565 (14.36)	.026 (0.73)
MDB1-9S**	MDVB1-9S**	.788 (20.02)	.380 (9.65)	.408 (10.36)	.173 (4.39)	.218 (5.54)	.565 (14.36)	.025 (0.70)
MDB1-15P**	MDVB1-15P**	.938 (23.82)	.442 (11.23)	.588 (14.17)	.173 (4.39)	.218 (5.54)	.715 (18.16)	.038 (1.10)
MDB1-15S**	MDVB1-15S**	.938 (23.82)	.530 (13.46)	.588 (14.17)	.173 (4.39)	.218 (5.54)	.715 (18.16)	.035 (1.00)
MDB1-21P**	MDVB1-21P**	1.088 (27.64)	.592 (15.04)	.708 (17.98)	.173 (4.39)	.218 (5.54)	.865 (21.97)	.053 (1.50)
MDB1-21S**	MDVB1-21S**	1.088 (27.64)	.680 (17.27)	.708 (17.98)	.173 (4.39)	.218 (5.54)	.865 (21.97)	.050 (1.40)
MDB1-25P**	MDVB1-25P**	1.188 (30.18)	.692 (17.58)	.808 (20.56)	.173 (4.39)	.218 (5.54)	.965 (24.51)	.063 (1.80)
MDB1-25S**	MDVB1-25S**	1.188 (30.18)	.780 (19.81)	.808 (20.56)	.173 (4.39)	.218 (5.54)	.965 (24.51)	.056 (1.60)
MDB1-31P**	MDVB1-31P**	1.338 (33.98)	.842 (21.39)	.958 (24.33)	.173 (4.39)	.218 (5.54)	1.115 (28.32)	.080 (2.30)
MDB1-31S**	MDVB1-31S**	1.338 (33.98)	.930 (23.62)	.958 (24.33)	.173 (4.39)	.218 (5.54)	1.115 (28.32)	.073 (2.10)
MDB1-37P**	MDVB1-37P**	1.488 (37.80)	.992 (25.20)	1.108 (28.14)	.173 (4.39)	.218 (5.54)	1.265 (32.13)	.086 (2.45)
MDB1-37S**	MDVB1-37S**	1.488 (37.80)	1.080 (27.43)	1.108 (28.14)	.173 (4.39)	.218 (5.54)	1.265 (32.13)	.076 (2.15)
MDB1-51P**	MDVB1-51P**	1.438 (36.52)	.942 (23.93)	1.058 (26.87)	.220 (5.59)	.260 (6.60)	1.215 (30.86)	.109 (3.10)
MDB1-51S**	MDVB1-51S**	1.438 (36.52)	1.030 (26.16)	1.058 (26.87)	.220 (5.59)	.260 (6.60)	1.215 (30.86)	.093 (2.64)

**Add lead type and length, see Part Number Explanation.
***Weight given is with 1/2", uninsulated solid #25 AWG gold plated copper pigtails.

* For Standard Wire Termination codes refer to the wire pp. 74-76

Micro-D Plastic Shell - .050" Contact Spacing MD*D-PCB

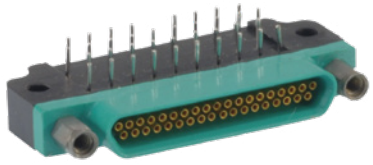

Cannon's MD*D-PCB Microminiature Connectors are designed with standard, all-plastic shells for use with flex circuitry, printed circuit and multi-layer boards. They are easily mounted and soldered, and offer high density and high reliability in board-to-board and board-to-cable applications. MD*D-PCB connectors are extremely small, lightweight and ruggedized for exceptional performance in the harshest environments. They are available in seven shell sizes, with 9 to 51 contacts in the popular 90° narrow profile PCB termination and a variety of tail lengths for varying board thickness. Jackpost mounting is also available for use with locking hardware.

How to Order

R	MD*B	-	37	S	CBR	*	L39	-	***

RoHS Compliance
Series
Contact Arrangement
Contact Type
Termination Type
Hardware
Termination Tail Length
Modification Codes (Consult Factory)

Connector Series
MDVB, MDB

Connector Arrangements
9-15-21-25-31-51

Contact Type
P - Pin
S - Socket

Termination Type
CBR - 90° Narrow Profile PCB Terminations

Hardware
P - Jackpost
M7 - Jackposts, M635135-07
No Letter = Less Hardware

Termination Tail Length Codes
None - .109 (2.77) ± 0.15 (0.38) Standard
L61 - .125 (3.18)
L66 - .150 (3.81)
L57 - .190 (4.83)
L39 - .250 (6.35)
L58 - .375 (9.52)

RoHS COMPLIANT PART NUMBERS

Micro-D Plastic Shell - .050" Contact Spacing MD*B-PCB

CBR Series (90° Mounting Narrow Profile)

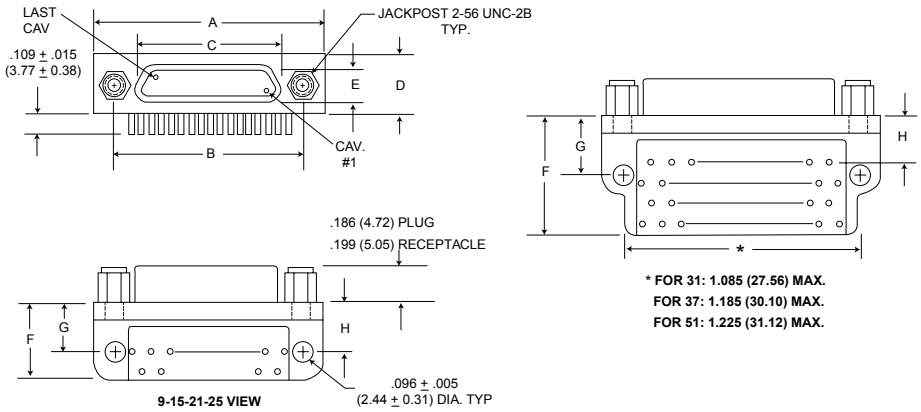

PCB Termination Arrangements (Viewed from bottom of connector, on PCB solder side.)

Indentification number shown for plug connector, use reverse order for socket connector.

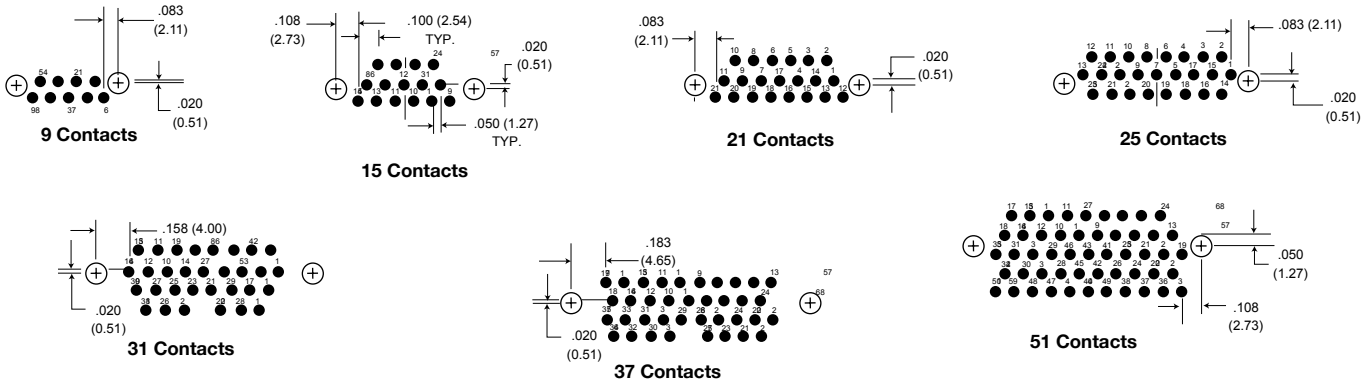

All Termination Configurations .100 (2.54) x .100 (2.54) Grid Pattern, Offset .050 (1.27)

Part Number By Shell Size	A Max.	B ± .005 (0.13)	C Max.	D Max.	E Max.	F Max.	G ± .010 (0.25)	H ± .010 (0.25)
MD*B-9PCBR*	.788 (20.01)	.565 (14.35)	.292 (7.42)	.218 (5.54)	.134 (3.40)	.420 (10.67)	.250 (6.35)	.230 (5.84)
MD*B-9SCBR*	.788 (20.01)	.565 (14.35)	.375 (9.52)	.218 (5.54)	.218 (5.54)	.420 (10.67)	.250 (6.35)	.230 (5.84)
MD*B-15PCBR*	.938 (23.82)	.715 (18.16)	.442 (11.23)	.218 (5.54)	.134 (3.40)	.420 (10.67)	.250 (6.35)	.130 (3.30)
MD*B-15SCBR*	.938 (23.82)	.715 (18.16)	.525 (13.34)	.218 (5.54)	.218 (5.54)	.420 (10.67)	.250 (6.35)	.130 (3.30)
MD*B-21PCBR*	1.088 (27.63)	.865 (21.97)	.592 (15.04)	.218 (5.54)	.134 (3.40)	.420 (10.67)	.250 (6.35)	.130 (3.30)
MD*B-21SCBR*	1.088 (27.63)	.865 (21.97)	.675 (17.14)	.218 (5.54)	.218 (5.54)	.420 (10.67)	.250 (6.35)	.130 (3.30)
MD*B-25PCBR*	1.188 (30.17)	.965 (24.51)	.692 (17.58)	.218 (5.54)	.134 (3.40)	.420 (10.67)	.250 (6.35)	.130 (3.30)
MD*B-25SCBR*	1.188 (30.17)	.965 (24.51)	.775 (19.68)	.218 (5.54)	.218 (5.54)	.420 (10.67)	.250 (6.35)	.130 (3.30)
MD*B-31PCBR*	1.338 (33.98)	1.115 (28.32)	.842 (21.39)	.218 (5.54)	.134 (3.40)	.420 (10.67)	.250 (6.35)	.130 (3.30)
MD*B-31SCBR*	1.338 (33.98)	1.115 (28.32)	.925 (23.50)	.218 (5.54)	.218 (5.54)	.420 (10.67)	.250 (6.35)	.130 (3.30)
MD*B-37PCBR*	1.488 (37.79)	1.265 (32.13)	.994 (25.25)	.218 (5.54)	.134 (3.40)	.520 (13.21)	.250 (6.35)	.130 (3.30)
MD*B-37SCBR	1.488 (37.79)	1.265 (32.13)	1.075 (27.30)	.218 (5.54)	.218 (5.54)	.520 (13.21)	.250 (6.35)	.130 (3.30)
MD*B-51PCBR*	1.438 (36.52)	1.215 (30.86)	.942 (23.93)	.258 (6.55)	.177 (4.50)	.550 (13.97)	.300 (7.62)	.150 (3.81)
MD*B-51SCBR	1.438 (36.52)	1.215 (30.86)	1.026 (26.06)	.258 (6.55)	.258 (6.55)	.550 (13.97)	.300 (7.62)	.150 (3.81)

* For jackpost locking add letter "P" or "M7".

NOTE: Standard lead termination is #24 AWG, solid copper, solder or tin dipped.

Dimensions shown in mm

Specifications and dimensions subject to change

Micro-D Plastic Shell - .050" Contact Spacing MDB Coaxial

MDB Coaxial Series with Screw Mounting Holes

Cannon MDB Coaxial Microminiature Connectors feature two coaxial and five MicroPin /Micro-Socket contacts. Crimp-type coaxial contacts accommodate RG-178/U cables. A plastic insertion/extraction tool is supplied, with each connector assembly having a removable coaxial assembly.

How to Order - MDB Coaxial

R	MDB	1	-7	C2	*	S	H	**	*	K

RoHS Compliance
Series
Signal Contact Spacing
Total Contact Cavities
Number of Coaxials
Coaxial Type
Signal Contact Type
Signal Contact Lead Type
Signal Contact Lead Length
Modification
Hardware

Series
Micro-D Coaxial

Signal Contact Spacing
1 - .050 (1.27) centers

Total Contact Cavities 7

Number of Coaxials 2

Coaxial Type
No Letter - Coaxial assembly installed and non removable
RO - Coaxial assembly ordered separately
RA - Coaxial shipped assembled but uninstalled

Signal Contact Type
P - Pin
S - Socket

Signal Contact Lead Type
L - Uninsulated, solid wire
H - Insulated, solid or stranded
S - Solder pot*

Signal Contact Lead Length
See Standard Wire Termination Code on page 29. Coaxial cable will be RG-178U unless otherwise specified; length will be same as wire modification.

Modification
Consult customer service

Hardware
No letter - No hardware standard mounting. 091 (2.31) hole diameter
F - Float
K - Jackscrew (standard)
L - Jackscrew (low profile)
P - Jackpost

* Not available with removalbe coax cable type connectors RO and RA.

RoHS COMPLIANT PART NUMBERS

How to Order - Coaxial Cable Assemblies

RoHS COMPLIANT PART NUMBERS

R	MD	CC	S	*	***

RoHS Compliance
Series
Coaxial Cable
Contact
Coaxial Cable Type
Coaxial Cable Length

Series
MD

Coaxial Cable
CC

Signal Contact Type
P - Pin (used with socket side connection)
S - Socket (used with pin type connection

Coaxial Cable Type
1 - RG178/U

Coaxial Cable Length
See Standard Wire Termination Codes on page 29. Coaxial cable will be RG-178U unless otherwise specified; length will be the same as wire modfication.

Micro-D Plastic Shell - .050" Contact Spacing

Dimension - MDB Coaxial Series

(See page 12 for layouts)

Plug

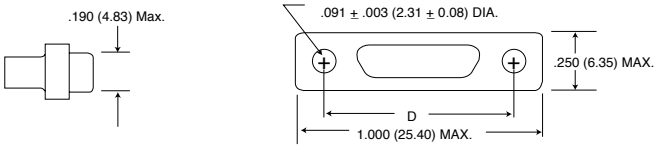

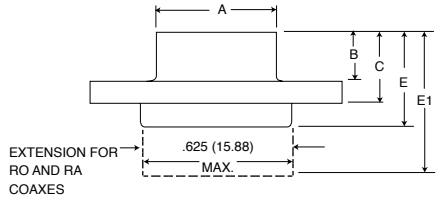

Receptacle

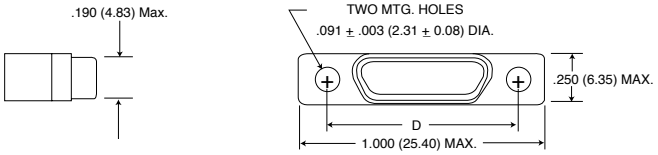

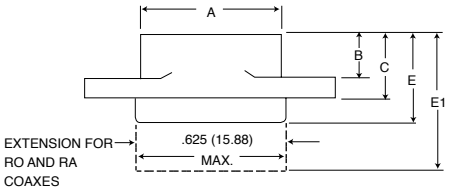

Part Number By Shell Size	A Max.	B Max.	C Max.	D +_ .005 (0.13)	E Max.	E1 Max.	Avg. Weight** (oz) +_ 5% (gm.) +_ 5%
MDB1-7C2P*	.510 (12.95)	.204 (5.18)	.298 (7.57)	.782 (19.86)	.395 (10.03)	.510 (12.95)	.290 (8.30)
MDB1-7C2S*	.602 (15.29)	.185 (4.70)	.279 (7.09)	.782 (19.86)	.375 (9.52)	.540 (13.72)	.273 (7.80)

* Add lead type and length, see Part Number Explanation.
** Weight given is with 7 inch (177.80) insulated leads, #26 AWG silver plated copper pigtails and RG178/U coaxials.

Micro-D Plastic Shell - .050" Contact Spacing

Mounting Hardware Views (Sizes 9-51) - Front Panel Mounting

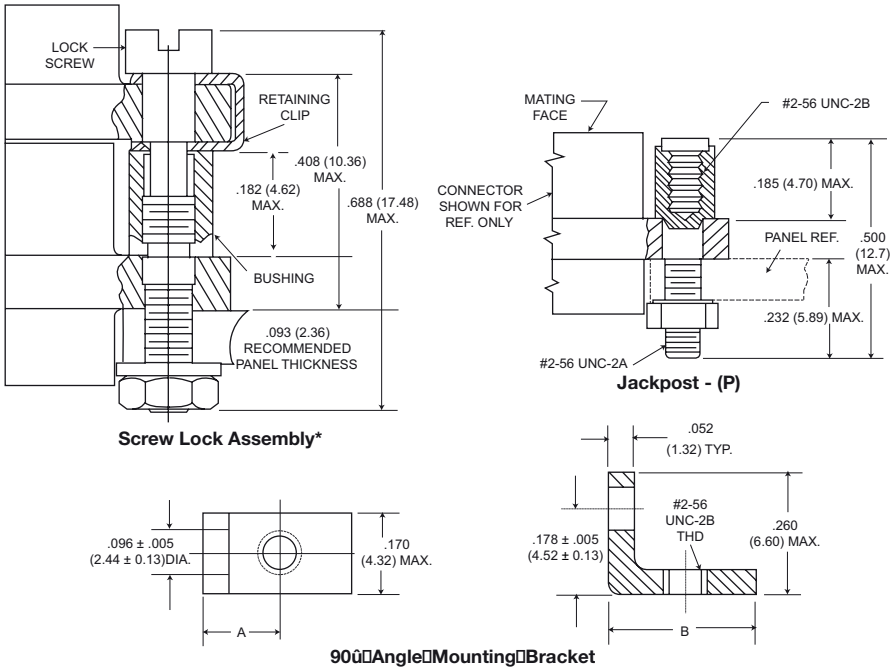

Screw Lock Assembly*

Jackpost - (P)

90û Angle Mounting Bracket

*NOTE: Torque value is 4.0 in/lbs max.

Description	Part Number	A +/-.005 (0.13)	B Max.
Screw Lock Assembly Jackpost Kit	322-9500-000 320-9505-000		
Mounting Bracket, 90° Angle- MD*1 for 9 thru 37 Shell Sizes	015-9516-000	.100 (2.54)	.215 (5.46)
MD*1 for 51 Shell Size	015-9516-000	.122 (3.10)	.257 (6.53)

NOTES: Screw lock assembly (322-9500-000) can be used for front mounting. Jackpost kit (320-9505-000) consists of 2 assemblies, shipped unassembled.

This hardware is factory installed.

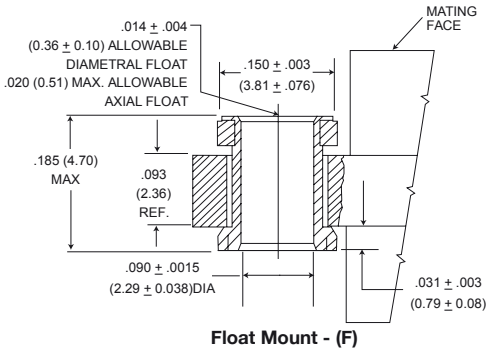

Float Mount - (F)

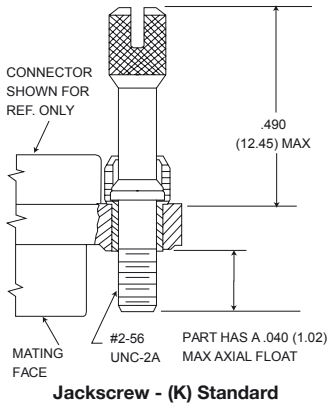

Jackscrew - (K) Standard

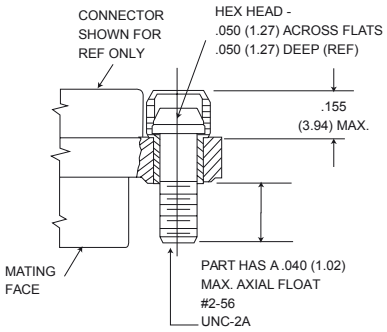

Jackscrew - (L) Low Profile

Shown here is a cutaway view of the float mount for the MD connector. The basic shell dimensions are the same for the float mount and the screw mounting hole configurations. View shown is for standard float mount front panel mounting. Reverse mounting is available on request.

* NOTE: Torque values are as follows:
Low Profile Jackscrew (L)-2.5 in/lbs
Standard Jackscrew (K)-2.5 in/lbs

Micro-D Plastic Shell - .050" Contact Spacing

Mounting Hardware to Military Specification (Sizes 9 - 51) PER MIL-DTL-83513/5

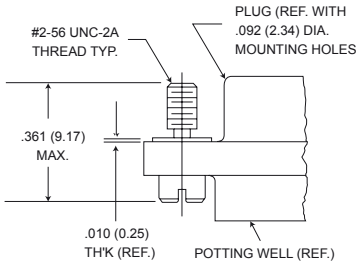

Jackscrew - (L) Low profile *

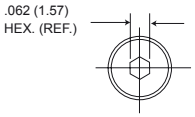

Allen head
Optional Head Configuration
Plug and Receptacle
Low and High Profile

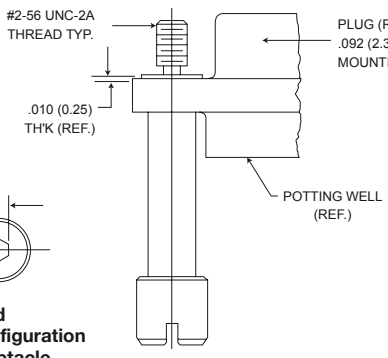

Jackscrew - (K) High Profile
Slotted Head

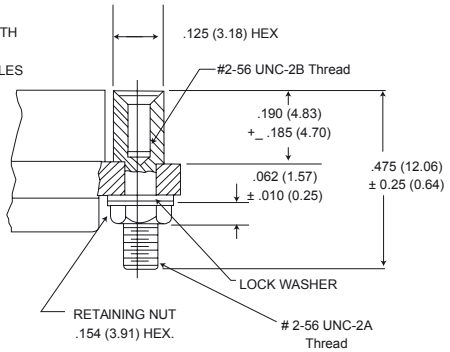

Jackpost Assembly

Description	M83513/5	Mode Code	Part Number
Slotted Head Jackscrew Assy Low Profile	-05	M5	320-9508-025
Slotted Head Jackscrew Assy High Profile	-06	M6	320-9508-027
Allen Head Jackscrew Assy Low Profile	-02	M2	320-9508-026
Allen Head Jackscrew Assy High Profile	-03	M3	320-9508-028
Jackpost Assy	-07	M7	320-9505-033

Jackpost Bushing (For Rear Panel Mounting)

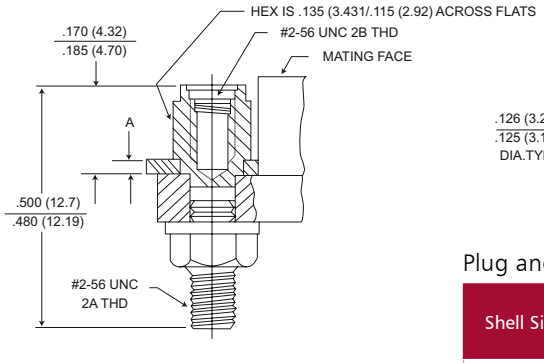

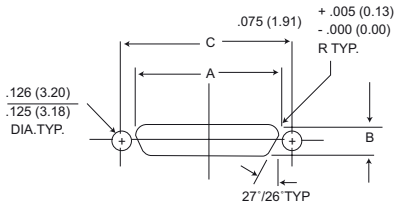

Panel Thickness	A Dim.	Jackpost Kit Number*
3/32 (2.4)	.092/.087 (2.34/2.21)	320-9505-007
1/16 (1.6)	.061/.056 (2.34/1.42)	320-9505-006
3/64 (1.2)	.047/.042 (1.19/1.07)	320-9505-005
1/32 (0.8)	.030/.025 (0.76/0.64)	320-9505-004

*2 Jackposts, 2 nuts, 2 washers.
NOTE: Torque value for jackpost 2.5 in/lbs

Plug and Receptacle Dimensions

Shell Size	A +.004 (0.10) -.000 (0.00)	B +.004 (0.10) -.000 (0.00	C +.005 (0.13)
9	.379 (9.63)	.219 (5.56)	.565 (14.35)
15	.529 (13.44)	.219 (5.56)	.715 (18.16)
21	.679 (17.25)	.219 (5.56)	.865 (21.97)
25	.779 (19.79)	.219 (5.56)	.965 (24.51)
31	.929 (23.60)	.219 (5.56)	1.115 (28.32)
37	1.079 (27.41)	.219 (5.56)	1.265 (32.13)
51	1.029 (26.14)	.261 (6.63)	1.215 (30.86)

Jackpost Bushing (For Rear Panel Mounting)

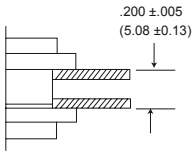

Plug and Receptacle
Rear Mounted

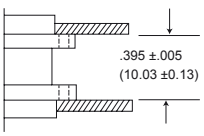

Plug and Receptacle
Front Mounted

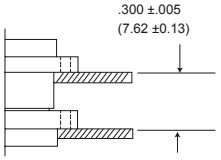

Plug Front Mounted
Receptacle Rear Mounted

Dimensions shown in mm
Specifications and dimensions subject to change

Micro-D Plastic Shell - .050" Contact Spacing MD

Panel Cutouts

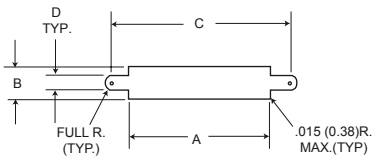

Figure 1
Front Mounting

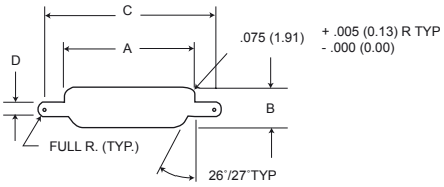

Figure 2
Rear Mounting

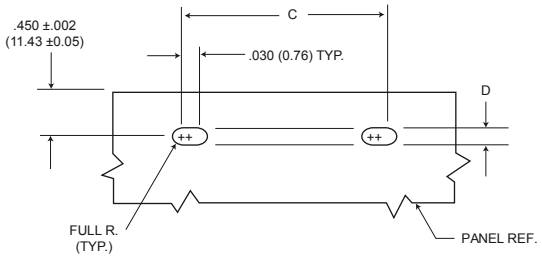

Figure 3
Edgeboard Mounting

Size	Cutout Figure	A + .004 (0.10) - .000 (0.00)	B + .004 (0.10) - .000 (0.00)	C + .005 (0.13) - .000 (0.00)	D + .005 (0.13) - .000 (0.00)
9	1	.409 (10.39)	.172 (4.37)	.570 (14.48)	.089 (2.26)
	2	.379 (9.63)	.219 (5.56)	.570 (14.48)	.089 (2.26)
	3	-	-	.570 (14.48)	.089 (2.26)
15	1	.559 (14.20)	.172 (4.37)	.720 (18.29)	.089 (2.26)
	2	.529 (13.44)	.219 (5.56)	.720 (18.29)	.089 (2.26)
	3	-	-	.720 (18.29)	.089 (2.26)
21	1	.709 (18.00)	.172 (4.37)	.870 (22.10)	.089 (2.26)
	2	.679 (17.25)	.219 (5.56)	.870 (22.10)	.089 (2.26)
	3	-	-	.870 (22.10)	.089 (2.26)
25	1	.809 (20.55)	.172 (4.37)	.970 (24.64)	.089 (2.26)
	2	.779 (19.79)	.219 (5.56)	.970 (24.64)	.089 (2.26)
	3	-	-	.970 (24.64)	.089 (2.26)
31	1	.959 (24.36)	.172 (4.37)	1.120 (28.45)	.089 (2.26)
	2	.929 (23.60)	.219 (5.56)	1.120 (28.45)	.089 (2.26)
	3	-	-	1.120 (28.45)	.089 (2.26)
37	1	1.109 (28.17)	.172 (4.37)	1.270 (32.26)	.089 (2.26)
	2	1.079 (27.41)	.219 (5.56)	1.270 (32.26)	.089 (2.26)
	3	-	-	1.270 (32.26)	.089 (2.26)
51	1	1.059 (26.90)	.215 (5.46)	1.220 (30.99)	.089 (2.26)
	2	1.029 (26.14)	.261 (6.63)	1.220 (30.99)	.089 (2.26)
	3	-	-	1.220 (30.99)	.089 (2.26)

NOTE:
1. Front mounting (figure 1) and rear mounting (figure 2) accommodates #2-56 screws.
2. Front mounting is preferred. However, when rear mounting is necessary. use detail on previous page.
3. Edgeboard mounting bracket (figure3) uses #2-56 screws. Dimension .450 ± .002 (11.43 ± 0.05) locates the MD receptacle flush with the end of the board.

Micro-D Plastic Shell - .050" Contact Spacing MD/MDV

How to Order

R	MD	1-	9	P	H	001	P

RoHS Compliance

Series-Insulator Style-Material

Contact Spacing

Contact Arrangement

Contact Type

Termination Type

Termination Code

Locking Hardware

Series-Insulator Style-Material
MD - Clip mounting -Diallyl phthalate
MDV - Clip mounting-Polyester

Contact Spacing
1 - .050 (1.27) centers

Contact Arrangement
9-15-21-25-31*-37-51. See page 12

Contact Type
P - Pin
S - Socket

Termination Type
H - Insulated solid or stranded wire
L - Uninsulated solid wire
S - Solder pot to accept #26 AWG max. harness wire.

Termination Code**
(H) 001 - 18", 7/34 strand, #26 AWG, MIL-W-16878/4, Type E Teflon, Yellow.
(H) 003 - 18", 7/34 strand, #26 AWG, MIL-W-16878/4, Type E Teflon, color coded to MIL-STD-681 System I.
(L) 1 - 1/2" uninsulated solid #25 AWG gold plated copper.
(L) 2 - 1" uninsulated solid #25 AWG gold plated copper.

No designator - No hardware - standard mounting.091 (2.31) hole diameter
*Not available in clip mounting. **See page 79-81 for additional codes

RoHS COMPLIANT PART NUMBERS

With Clip Mounting Slots

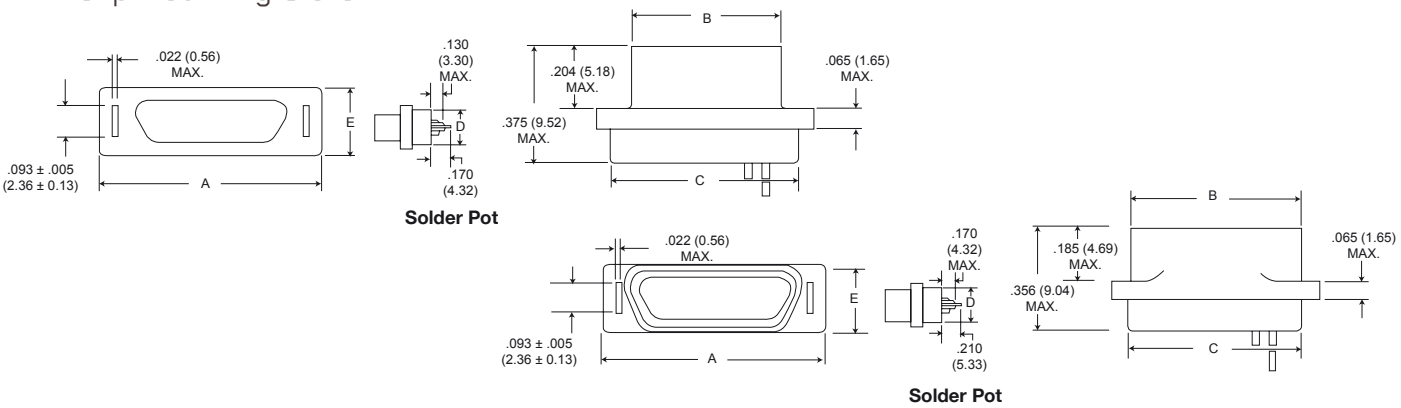

Part Number By Shell Size		A Max.	B Max.	C Max.	D Max.	E Max.	Avg. Weight*** ±5% (oz.)/±5% (gm.)
MD1-9P**	MDV1-9-P**	.512 (13.00)	.292 (7.42)	.405 (10.29)	.170 (4.32)	.215 (5.46)	.026 (0.73)
MD1-9S**	MDV1-9S**	.512 (13.00)	.376 (9.55)	.405 (10.29)	.170 (4.32)	.215 (5.46)	.026 (0.73)
MD1-15P**	MDV1-15P**	.662 (16.81)	.442 (11.23)	.555 (14.10)	.170 (4.32)	.215 (5.46)	.038 (1.10)
MD1-15S**	MDV1-15S**	.662 (16.81)	.526 (13.36)	.555 (14.10)	.170 (4.32)	.215 (5.46)	.038 (1.10)
MD1-21P**	MDV1-21P**	.812 (20.62)	.592 (15.04)	.705 (17.91)	.170 (4.32)	.215 (5.46)	.053 (1.50)
MD1-21S**	MDV1-21S**	.812 (20.62)	.676 (17.17)	.705 (17.91)	.170 (4.32)	.215 (5.46)	.050 (1.40)
MD1-25P**	MDV1-25P**	.912 (23.16)	.692 (17.58)	.805 (20.45)	.170 (4.32)	.215 (5.46)	.063 (1.80)
MD1-25S**	MDV1-25S**	.912 (23.16)	.776 (19.71)	.805 (20.45)	.170 (4.32)	.215 (5.46)	.056 (1.60)
MD1-37P**	MDV1-37P**	1.212 (30.78)	.992 (25.20)	1.105 (28.07)	.170 (4.32)	.215 (5.46)	.086 (2.45)
MD1-37S**	MDV1-37S**	1.212 (30.78)	1.076 (27.33)	1.105 (28.07)	.170 (4.32)	.215 (5.46)	.076 (2.15)
MD1-51P**	MDV1-51P**	1.162 (29.51)	.942 (23.93)	1.055 (26.80)	.213 (5.41)	.258 (6.55)	.109 (3.10)
MD1-51S**	MDV1-51S**	1.162 (29.51)	.026 (26.06)	1.055 (26.80)	.213 (5.41)	.258 (6.55)	.093 (2.65)

** Add lead type and length, see Part Number Explanation. *** Weight given is with 1/2", uninsulated solid #25 AWG gold plated copper pigtails.

Dimensions shown in mm
Specifications and dimensions subject to change

Micro-D Plastic Shell - .050" Contact Spacing MD**

Panel Mounting Hardware

Description	Part Number
Panel Mounting Key	201-9100-000
Mounting Key and Coupling Clip Assembly	294-9100-000
Mounting Screw Bracket	015-9100-000
*Edgeboard Mounting Bracket	015-5009-000
**Edgeboard Mounting Bracket and Coupling Clip Assembly	MD51428-1

* Must be ordered separately; specify left and right hand for complete assembly.
** Must be ordered separately; assembly contains set of left and right hand types.

Dimensions (Clip Mounting Only)

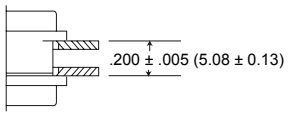

Plug and Receptacle Rear Mounted

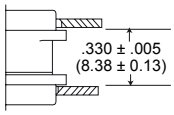

Plug and Receptacle Front Mounted

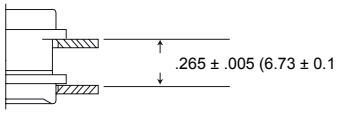

Plug Front Mounted Receptacle Rear Mounted

Panel Cutouts

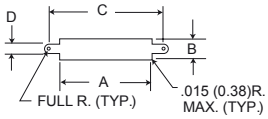

Figure 1

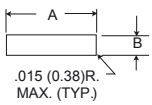

Figure 2

Front Mounting

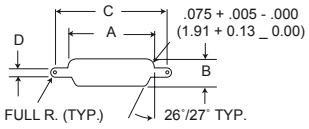

Figure 3
Rear Mounting

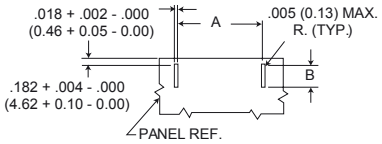

Figure 4
Edgeboard Mounting

Shell Size	Cutout Figure	A + .004 (0.10) - .000 (0.00)	B + .004 (0.10) - .000 (0.00)	C + .004 (0.10) - .000 (0.00)	D + .005 (0.13) - .000 (0.00)
9	1	.408 (10.36)	.172 (4.37)	.650 (16.51)	.089 (2.26)
	2	.408 (10.36)	.172 (4.37)	-	-
	3	.378 (9.60)	.217 (5.51)	.650 (16.51)	.089 (2.26)
	4	.400 (10.16)	.091 (2.31)	-	-
15	1	.588 (14.94)	.172 (4.37)	.795 (20.19)	.089 (2.26)
	2	.588 (14.94)	.172 (4.37)	-	-
	3	.528 (13.28)	.217 (5.51)	.795 (20.19)	.089 (2.26)
	4	.550 (13.97)	.091 (2.31)	-	-
21	1	.738 (18.75)	.172 (4.37)	.945 (24.00)	.089 (2.26)
	2	.738 (18.75)	.172 (4.37)	-	-
	3	.678 (17.27)	.217 (5.51)	.945 (24.00)	.089 (2.26)
	4	.700 (17.78)	.091 (2.31)	-	-
25	1	.838 (21.29)	.172 (4.37)	1.045 (26.54)	.089 (2.26)
	2	.838 (21.29)	.172 (4.37)	-	-
	3	.778 (19.76)	.217 (5.51)	1.045 (26.54)	.089 (2.26)
	4	.800 (20.32)	.091 (2.31)	-	-
37	1	1.138 (28.91)	.172 (4.37)	1.345 (34.16)	.089 (2.26)
	2	1.138 (28.91)	.172 (4.37)	-	-
	3	1.078 (27.38)	.217 (5.51)	1.345 (34.16)	.089 (2.26)
	4	1.078 (27.38)	.091 (2.31)	-	-
51	1	1.088 (27.64)	.215 (5.46)	1.295 (32.89)	.089 (2.26)
	2	1.088 (27.64)	.215 (5.46)	-	-
	3	1.028 (26.11)	.260 (6.60)	1.295 (32.89)	.089 (2.26)
	4	1.050 (26.67)	.091 (2.31)	-	-

NOTE:
1. A panel thickness of 1/8" (3.17mm) maximum is recommended for ease of tab bending when a panel mounting key & clip assembly or edgeboard mounting brackets are used.
2. Front mounting is preferred. However, when rear mounting is necessary, use figure 3 for dimensions.
3. Figure 4 is for edge board mounting bracket or edgeboard clip assembly. The .184 +_ .002 (2.67 +_ 0.05) dimension locates the MD socket insulator flush with the end of the board.
4. Screw brackets (015-9100-000) will accommodate #2-56 screws.
5. Front mounting (Figure 1) and rear mounting (Figure 3) accommodate #2-56 screws.

Micro Center Jackscrew

MJS



Cannon's MJS Micro Center Jackscrew Series provides a reliable interconnect for board-to-board, board-to-cable and inline cable-to-cable applications. Layouts accommodating up to 76 MicroPin/Micro-Socket contacts are available with a wide range of options.

How to Order

R	MJS	*	-	26	P	H	001

RoHS Compliance

Series

Insulator Material

Contact Arrangement

Contact Type

Termination Type

Termination Codes

Series
MJS - Micro Center Jackscrew

Insulator Material
B - Diallyl phthalate
V - Polyester
U - Polyetherimide
R - Polyphenylene sulfide

Contact Arrangements
Unshrounded Receptacle: 10, 26, 51, 66
Shrouded Receptacle; 10, 26, 34, 38, 42, 76
Low Profile Plug and Receptacle (shrouded): 28

Contact Type
P - Pin
S - Socket

Termination Type
H - Insulated wire harness.
I - Integral tail (MJSV-28S only).
L - Solid - uninsulated wire.
S - Solder pot to accept #26 AWG harness wire.
T - Thru bundle pigtail (MJSV-28P only).

Termination Codes*
(H) 001 - 18" , 7/34 strand, #26 AWG, MIL-W-16878/4, Type E Teflon, yellow.
(H) 003 - 18", 7/34 strand, #26 AWG, MIL-W-16878/4, Type E Teflon, color coded to MIL-STD-681 System I.
(L) 1 - 1/2" uninsulated solid #25 AWG gold plated copper.
(L) 2 - 1" uninsulated solid #25 AWG gold plated copper.

* See Termination Codes shown below.

RoHS COMPLIANT PART NUMBERS

Standard Wire Termination Codes

The following termination codes are listed for your information. For additional codes please refer to Appendix on pp. 74-76. All wire lengths are minimum.

Harness Type (H)
#26 AWG per MIL-W-16878/4 Type E Teflon, 7/34 stranded.

Length	All Yellow	Color Coded
3 (76.2)	H 020	H 027
6 (152.4)	H 019	H 016
8 (203.2)	H 026	H 034
10 (254.0)	H 029	H 025
12 (304.8)	H 028	H 002
18 (457.2)	H 001	H 003
20 (508.0)	H 038	H 023

Length	All Yellow	Color Coded
24 (609.6)	H 009	H 004
30 (762.0)	H 010	H 005
36 (914.4)	H 011	H 006
48 (1219.2)	H 013	H 048
72 (1828.8)	H 017	H 046
120 (3048.0)	H 042	H 041

Solid Uninsulated Type (L)
#25 AWG gold plated solid copper.

Termination Code	Length	Termination Code	Length
L61	.125 (3.18)	L14	.750 (19.05)
L56	.150 (3.81)	L2	1.000 (25.40)
L57	.190 (4.83)	L7	1.500 (38.10)
L39	.250 (6.35)	L6	2.000 (50.80)
L58	.375 (9.53)	L16	2.500 (63.50)
L1	.500 (12.70)	L10	3.000 (76.20)

Contact Arrangements

Face view of pin-use reverse order for socket

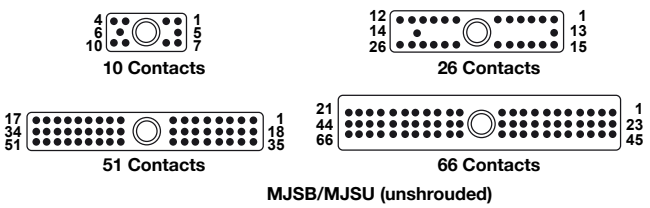

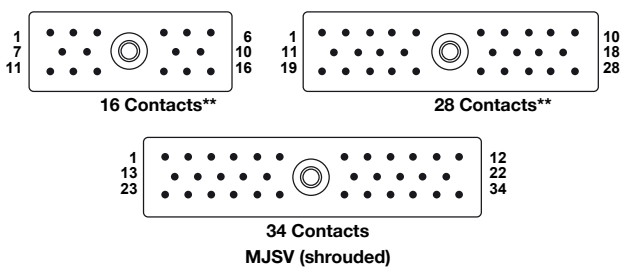

Identification numbers are for reference only and do not appear on connectors.
*Low profile configuration **MJSV & MJSR

Dimensions shown in mm
Specifications and dimensions subject to change

Micro Center Jackscrew

MJS

Unshrouded Receptacle (10-26-51-66)

MJSB/MJSU

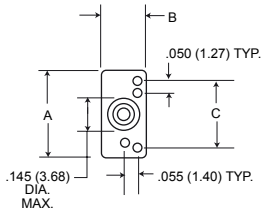

Rear View

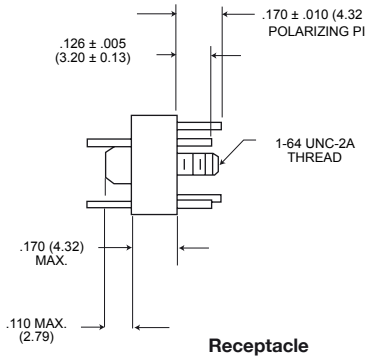

Receptacle

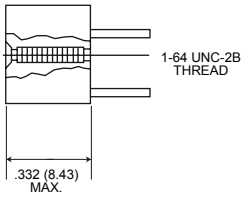

Plug

Unshrouded Standard Materials and Finishes	
Micropin	Copper alloy, 50 miro-inch gold
Microsocket	Copper alloy, 50 micro-inch gold
Insulator	Diallyl phthalate, green color or polyetherimide, natural color
Jackscrew	Stainless steel, passivated & lubricated
Retainer, Jackscrew	Stainless steel, passivated
Insert, Threaded	Stainless steel, passivated
Post, Polarizing	Stainless steel, passivated

Part Number	A Max.	B Max.	C Bsc.
MJSB or MJSU-10P	.378 (9.60)	.190 (4.83)	.290 (7.37)
MJSB or MJSU-10S	.378 (9.60)	.190 (4.83)	.290 (7.37)
MJSB or MJSU-26P	.778 (19.76)	.190 (4.83)	.690 (17.53)
MJSB or MJSU-26S	.778 (19.76)	.190 (4.83)	.690 (17.53)
MJSB or MJSU-51P	1.028 (26.11)	.260 (6.60)	.940 (23.88)
MJSB or MJSU-51S	1.028 (26.11)	.260 (6.60)	.940 (23.88)
MJSB or MJSU-66P	1.280 (32.51)	.260 (6.60)	1.190 (30.23)
MJSB or MJSU-66S	1.280 (32.51)	.260 (6.60)	1.190 (30.23)

Shrouded Receptacle (16-28*-34)

MJSB/MJSU

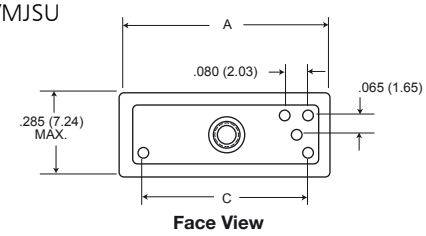

Face View

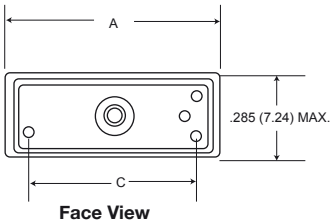

Face View

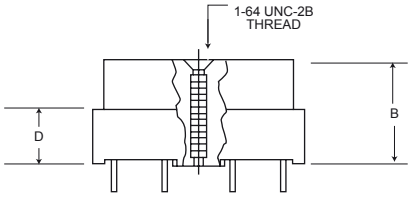

Plug

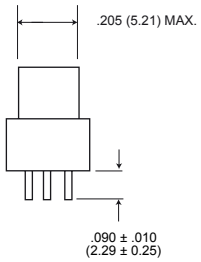

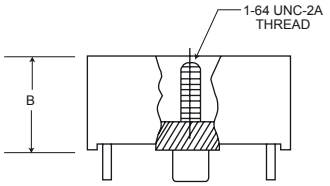

Receptacle

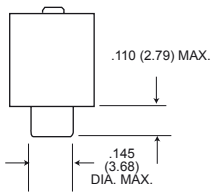

Shrouded Standard Materials and Finishes	
Micropin	Copper alloy, 50 miro-inch gold
Microsocket	Copper alloy, 50 micro-inch gold
Insulator	Polyester, black color Polyphenylene sulfide, black color
Jackscrew	Stainless steel, passivated
Retainer, Jackscrew	Stainless steel, passivated
Insert, Threaded	Stainless steel, passivated
Post, Polarizing	Stainless steel, passivated

Part Number	A Max.	B Max.	C Ref.	D ± .006 (0.15)
MJSV or MJSR-16P	.700 (17.78)	.345 (8.76)	.545 (13.84)	.175 (4.45)
MJSV or MJSR-16S	.700 (17.78)	.320 (8.13)	.545 (13.84)	-
MJSV-28P* or MJSR-28P*	1.020 (25.91)	.232 (5.89)	.865 (21.97)	.062 (1.57)
MJSV-28S* or MJSR-28S*	1.020 (25.91)	.246 (6.25)	.865 (21.97)	-
MJSV-34P or MJSR-34P	1.180 (29.97)	.330 (8.38)	1.025 (26.04)	.160 (4.06)
MJSV-34S or MJSR-34S	1.180 (29.97)	.305 (7.75)	1.025 (26.04)	-

*Low profile configuration, for "L" (uninsulated solid wire) termination add .090 (2.29) to the "B" dimension. For "H" (insulated wire) termination add .200 (5.08) to the "B" dimension. For special configurations with backpotted standoffs consult factory.

Micro Center Jackscrew

MJS

Shrouded Plug

MJSR-42P

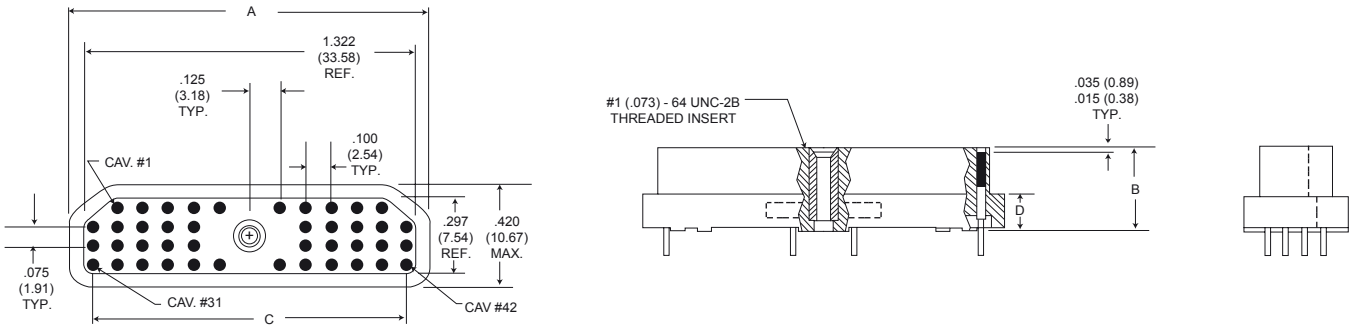

Shrouded Receptacle

MJSR-42S

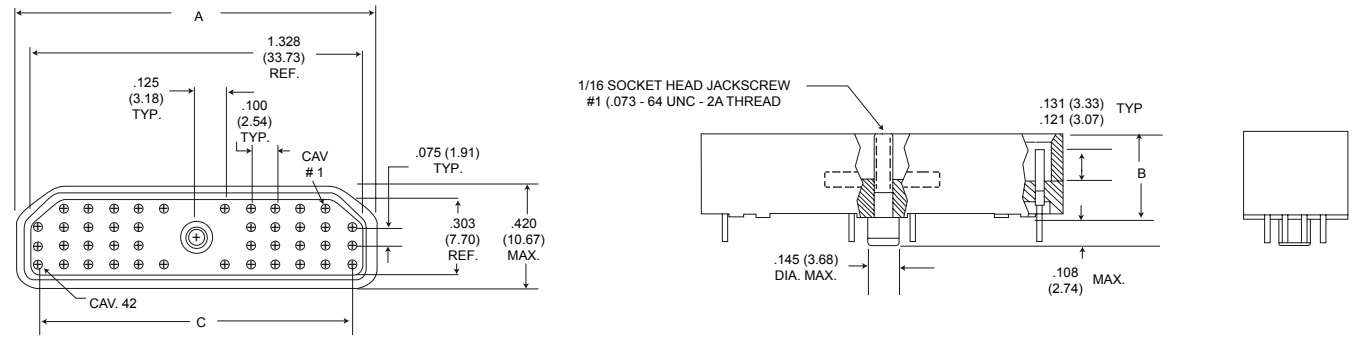

Standard Materials and Finishes	
Micropin	Copper alloy, 50 miro-inch gold
Microsocket	Copper alloy, 50 micro-inch gold
Insulator	Polyphenylene sulfide, black color
Jackscrew	Stainless steel, passivated
Retainer, Jackscrew	Stainless steel, passivated
Insert, Threaded	Stainless steel, passivated

Part Number	A Max.	B Max.	C Ref.	D ± .006 (0.15)
MJSR-42P	1.445 (36.70)	.345 (8.76)	1.250 (31.75)	.142 (3.61)
MJSR-42S	1.445 (36.70)	.357 (9.07)	1.250 (31.75)	-

Dimensions shown in mm
Specifications and dimensions subject to change

Shrouded Receptacle (76)

MJSR-76P

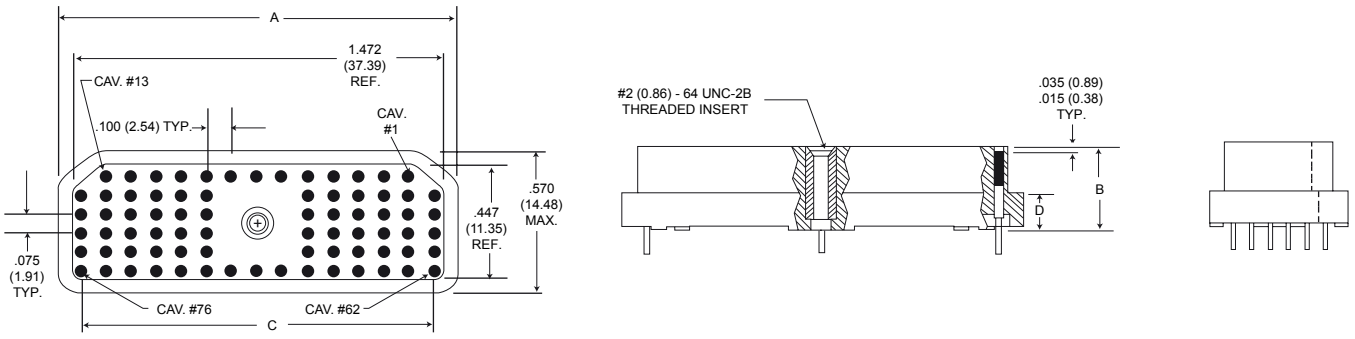

MJSR-76S

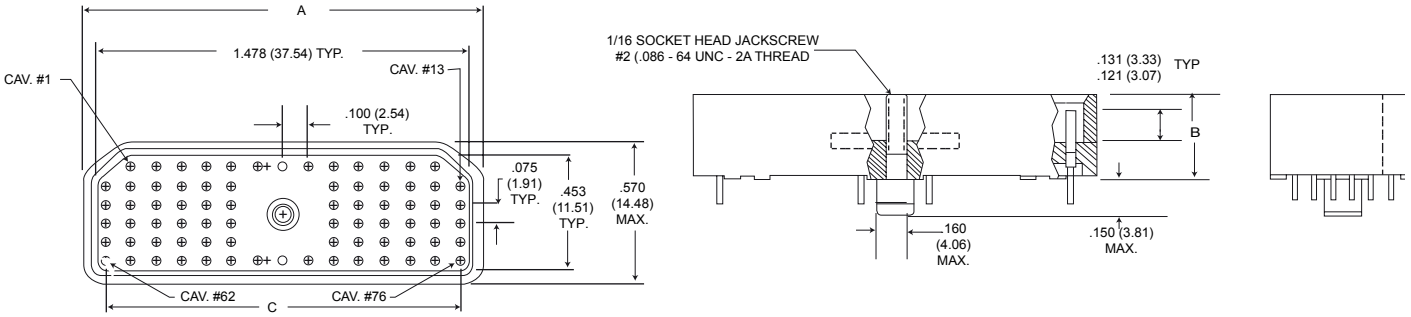

Standard Materials and Finishes	
Micropin	Copper alloy, 50 miro-inch gold
Microsocket	Copper alloy, 50 micro-inch gold
Insulator	Polyphenylene sulfide, black color
Jackscrew	Stainless steel, passivated
Retainer, Jackscrew	Stainless steel, passivated
Insert, Threaded	Stainless steel, passivated

Part Number	A Max.	B Max.	C Ref.	D ± .006 (0.15)
MJSR-76P	1.595 (40.51)	.345 (8.76)	1.400 (35.56)	.142 (3.61)
MJSR-76S	1.595 (40.51)	.357 (9.07)	1.400 (35.56)	-

Plug (Molded-In Insert - Special)

MJSV**P

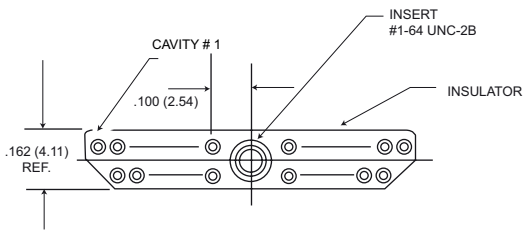

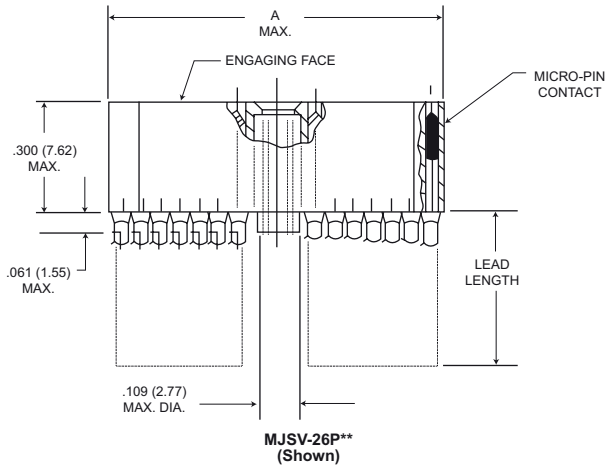

MJSV-26P**
(Shown)

Part Number	A Max.
MJSV-26P**	.868 (22.05)
MJSV-38P**	1.168 (29.67)

Receptacle (Special)

MJSV**S*

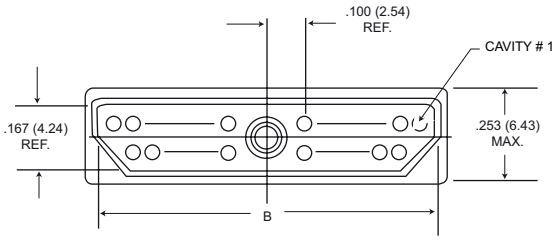

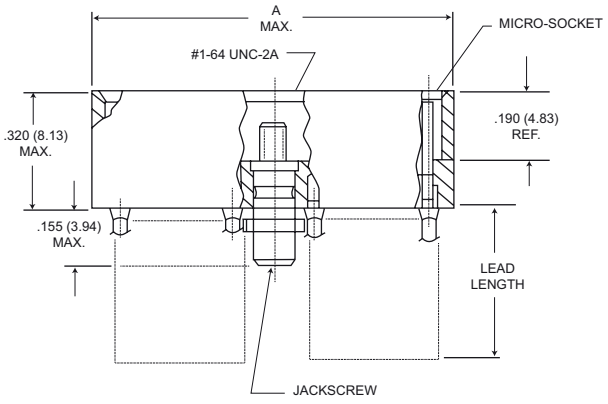

MJSV-26S**
(Shown)

Part Number	A Max.	B Max.
MJSV-26S**	.943 (23.95)	.874 (22.20)
MJSV-38S**	1.243 (31.57)	1.174 (29.82)

Contact Arrangements

Face view of pin - use reverse order for socket

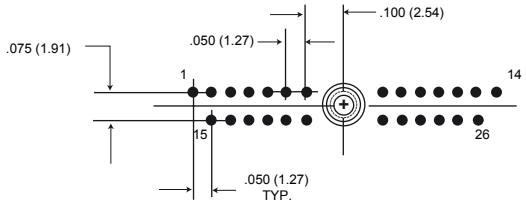

26 Contacts

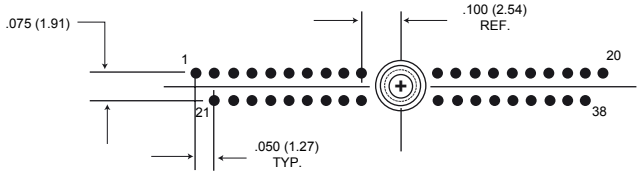

38 Contacts

Identification numbers are for reference and do not appear on connectors.

Microminiature Circular - .050" Contact Spacing MIK



Cannon's MIK Microminiature Circular Series Connectors are ruggedized, lightweight and meet the applicable requirements of MIL-DTL- 83513. Key markets and applications include biomedical, instrumentation and miniature black boxes. Our MIK Connector is designed to accommodate up to 55 contacts on .050 (1.27) centers (equivalent to 420 contacts per square inch). Five keyway polarization prevents cross plugging. Standard MIK Connectors are available in two shell sizes accommodating two contact arrangements pre-wired to your specific requirements. The threaded coupling nuts support connector strength and reliability. MIK receptacles can either be front or back panel mounted.

How to Order

R	MIK	M	6-	55	P	*	**	***

RoHS Compliance
Series
Connector Type
Shell Style
Contact Arrangement
Contact Type
Termination Type
Termination Length Code
Hardware

Series
MIK: Microminiature Circular

Connector Type
No Letter - Screw couping, plastic shell
M - Screw coupling, metal shell
Q - Push/Pull, metal shell

Shell Styles
0 - Wall mounting receptacle (MIK and MIKM only)
6 - Straight plug (MIK, MIKM and MIKQ)
7 - Jam nut mount (MIKQ only)
9 - Rear panel mounted receptacle (MIKQ)

Contact Arrangements
7, 19, 37, 55, 85s

Contact Type
P - Pin
S - Socket

Termination Types
H - Insulated round hook-up wire
L - Uninsulated round solid wire

Termination Length Code (Standards)
(H) 001 - 18", 7/34 strand, #26 AWG, MIL-W-16878/4, Type E Teflon, yellow.
(H) 003 - 18",7/34 strand, #26 AWG, MIL-W-16878/4, Type E Teflon, color coded to MIL-STD-681 System I.
(L) 1 - 1/2" uninsulated solid #25 AWG gold plated copper.
L) 2 - 1" uninsulated solid #25 AWG gold plated copper.

Hardware
G - Cable nut and grip (MIKQ plug only)
N - Nut only (MIKQ plug only)

RoHS COMPLIANT PART NUMBERS

NOTE: Contact types cannot be interchanged between shell styles.

Contact Arrangements

Face View, Pin Side-(Male Twist Pin Contacts)

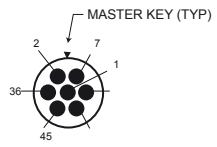

MIK/MIKM/MIKQ
7 Contacts

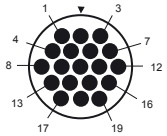

MIKQ
19 Contacts

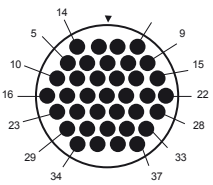

MIKQ
37 Contacts

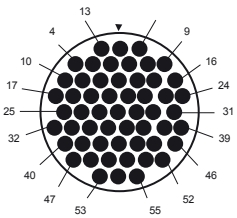

MIK/MIKM
55 Contacts

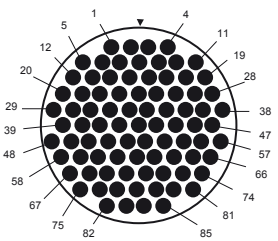

MIKM
85 Contacts

Cavity identification numbers are for reference only, they do not appear on connectors.

Microminiature Circular - .050" Contact Spacing MIK

MIK Connectors accommodate up to 55 contacts on .050 (1.27) centers (equivalent to 420 contacts per square inch). Five keyway polarization prevents cross plugging. The threaded coupling nuts provide strong, reliable coupling. MIK receptacles can be either front or back panel mounted; in back mounting applications, panel thickness of up to 3/32" can be used on larger sizes. Maximum temperature range -55°C to +125°C. Standard MIK connectors are available in two shell sizes, accommodating two contact arrangements pre-wired to your specific requirements.

Specifications

STANDARD MATERIAL AND FINISHES

	MIK
Shell	Thermoplastic
Coupling Nut	Stainless Steel Passivated
Insulator	Glass-reinforced Thermoplastic
Contacts	50 Microinch Gold Plated Copper Alloy

ELECTRO/MECHANICAL FEATURES

	MIKM
No of Contacts	7,55
Wire Size	#24 AWG thru #32 AWG
Contact Termination	Crimp
Contact Rating	3 Amps
Coupling	Threaded
Polarization	Keyways
Contact Spacing	.050 (1.27) Centers
Shell Styles	0-Wall Mtg. 6-Straight Plug

Standard Wire Termination Codes

The following termination codes are listed for your information.
For additional codes please refer to Appendix pp.74-76.
All wire lengths are minimum.

Harness Type (H)

#26 AWG per MIL-W-16878 Type E, Teflon Stranded

Length	All Yellow	Color Coded
3 (76.2)	020	027
6 (152.4)	019	016
8 (203.2)	026	034
10 (254.0)	029	025
12 (304.8)	028	002
18 (457.2)	001	003
20 (508.0)	038	023
24 (609.6)	009	004
30 (762.0)	010	005
36 (914.4)	011	006
48 (1219.2)	013	048
72 (1828.8)	017	046
120 (3048.0)	042	041

Microminiature Circular - .050" Contact Spacing MIK

Shell Dimensions

MIK (Rear Panel Mount Thickness - see Tabulation "T")

Weight given is 1/2" uninsulated, solid #25 AWG gold plated copper pigtails

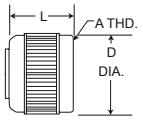

Plug

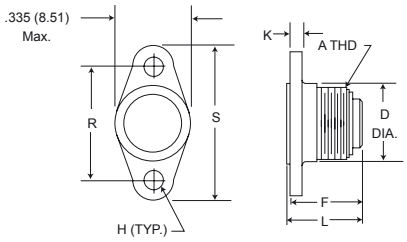

Receptacle
Shell Size 7 only

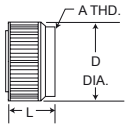

Plug

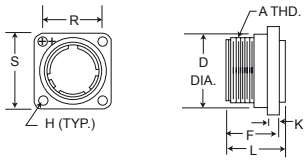

Receptacle
Shell Size 55 only

Plug

Part Number By Shell Size	A Thread	D Max.	L Max.	Avg. Weight** (oz) (gm.) ± 5%
MIK6-7P	5/16-24UNF-2B	.375 (9.52)	.315 (8.00)	.054 (1.54)
MIK6-55P	9/16-24UNF-2A	.755 (19.18)	.460 (11.68)	.202 (5.72)

Receptacle

Part Number By Shell Size	A Thread	D ± .010 (0.25)	F Max.	H ± .003 (0.08)	K ± .010 (0.25)	L Max.	R ± .005 (0.13)	S Max.	T Max.	Avg. Weight oz. (gm.) ± 5%
MIK0-7S	5/16-24UNF-2B	.325 (8.26)	.315 (8.00)	.078 (1.98)	.062 (1.57)	.355 (9.02)	.460 (11.68)	.630 (16.00)	.032 (0.81)	.022 (.635)
MIK0-55S	9/16-24UNF-2A	.625 (15.88)	.440 (11.18)	.089 (2.26)	.100 (2.54)	.495 (12.57)	.580 (14.73)	.760 (19.30)	.062 (1.57)	.134 (3.81)

Microminiature Circular - .050" Contact Spacing MIKM



Cannon's MIKM Microminiature Circular Connector is designed with a steel shell and receptacle for improved ruggedness and RFI resistance. It accommodates up to 55 contacts on .050 (1.27) centers (equivalent to 420 contacts per square inch) and features five keyway polarization to prevent cross plugging. The threaded coupling nuts offer strong, reliable coupling. MIKM receptacles can be either front or back panel mounted; in back mounting applications, panel thickness of up to 3/32" can be used on the larger sizes. Maximum temperature range - 55°C to + 125°C.

Specifications

STANDARD MATERIAL AND FINISHES

	MIK
Shell	Stainless Steel
Coupling Nut	Stainless Steel Passivated
Insulator	Glass-reinforced Thermoplastic
Contacts	50 Microinch Gold Plated Copper Alloy

ELECTRO/MECHANICAL FEATURES

	MIKM
No. of Contacts	7,55, 85
Wire Size	#24 AWG thru #32 AWG
Contact Termination	Crimp
Contact Rating	3 Amps
Coupling	Threaded
Polarization	Keyways
Contact Spacing	.050 (1.27) Centers
Shell Styles	0-Wall Mtg. 6-Straight Plug

Standard Wire Termination Codes

The following termination codes are listed for your information.
For additional codes please refer to Appendix on pp. 74-76.
All wire lengths are minimum.

Harness Type (H)

#26 AWG per MIL-W-16878 Type E, Teflon Stranded

Length	-All Yellow	Color Coded
3 (76.2)	020	027
6 (152.4)	019	016
8 (203.2)	026	034
10 (254.0)	029	025
12 (304.8)	028	002
18 (457.2)	001	003
20 (508.0)	038	023
24 (609.6)	009	004
30 (762.0)	010	005
36 (914.4)	011	006
48 (1219.2)	013	048
72 (1828.8)	017	046
120 (3048.0)	042	041

Microminiature Circular - .050” Contact Spacing MIKM

Shell Dimensions

MIKM (Rear Panel Mount Thickness .335 (8.51) max. - see Tabulation “T”)

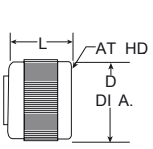

Plug

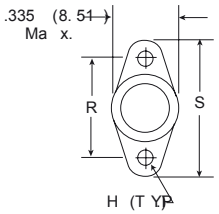

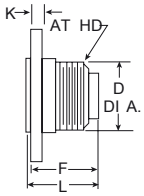

Receptacle
Shell Size 7 only

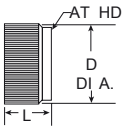

Plug

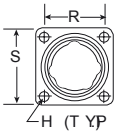

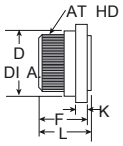

Receptacle
Shell Size 55 & 85

Plug

Part Number By Shell Size	A Thread	D Max.	L Max.	Avg. Weight oz. (gm.)+_5%
MIK6-7P	5/16-24UNF-2A	.375 (9.52)	.315 (8.00)	.054 (1.54)
MIK6-55P	5/8-24UNEF-2B	.755 (19.18)	.440 (11.18)	.333 (9.44)
MIKM6-85P	11/16-24UNEF-2B	.860 (21.84)	.460 (11.68)	.419 (11.88)

Receptacle

Part Number By Shell Size	A Thread	D	F Max.	H ± .003 (0.08)	K	L Max.	R ± .005 (0.13)	S Max.	T Max.	Avg. Weight oz. (gm.) ± 5%
MIK0-7S	5/16-24UNF-2A	.325 (8.26)	.320 (8.13)	.078 (1.98)	.062 (1.57)	.400 (10.16)	.460 (11.68)	.630 (16.00)	.032 (0.81)	.051 (1.45)
MIK0-55S	5/8-24UNEF-2A	.625 (15.88)	.440 (11.18)	.091 (2.31)	.062 (1.57)	.490 (12.45)	.580 (14.73)	.760 (19.30)	.125 (3.18)	.269 (7.62)
MIKM0-85S	11/16-24UNEF-2A	.745 (18.92)	.440 (11.18)	.091 (2.31)	.062 (1.57)	.490 (12.45)	.674 (17.12)	.845 (21.46)	.125 (3.18)	.346 (9.80)

Microminiature Circular - .050" Contact Spacing MIKQ



Cannnon's MIKQ Microminiature Circular Connectors feature a quick disconnect metal shell and a receptacle version that, when engaged, can be instantly disconnected while still providing a solid lock. Applications include commercial TV cameras, portable radios, military gun sights, airborne landing systems and medical equipment. Maximum temperature range is-55°C to +125°C.

Specifications

STANDARD MATERIAL AND FINISHES

	MIKQ
Shell	Brass
Coupling Nut	Brass, Electroless Nickel Plated*
Insulator	Glass-reinforced Thermoplastic
Contacts	50 Microinch Gold Plated Copper Alloy

ELECTRO/MECHANICAL FEATURES

	MIKQ
No. of Contacts	7,19, 37
Wire Size	#24 AWG thru #32 AWG
Contact Termination	Crimp
Contact Rating	3 Amps
Coupling	Push/Pull
Polarization	Keyways
Contact Spacing	.050 (1.27) Centers
Shell Styles	7-Jam Nut 6-Straight Plug 9-Rear Panel Mtg. Receptacle

Shell Dimensions

MIKQ (Front Panel Mounting Type Shown-.093 (2.36) Thickness)

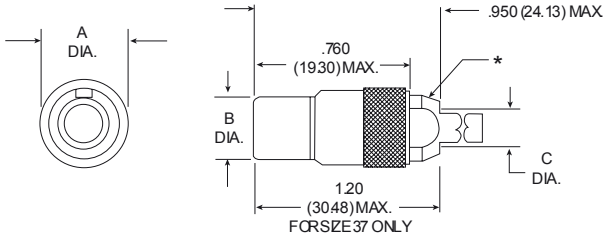

Plug

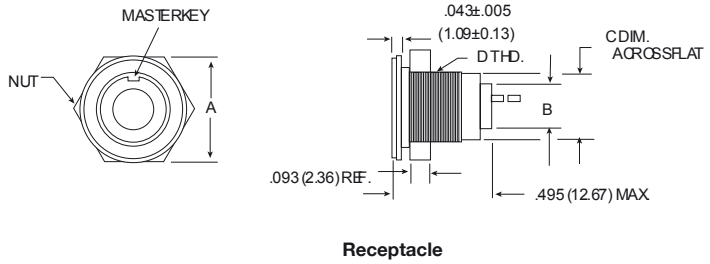

Receptacle

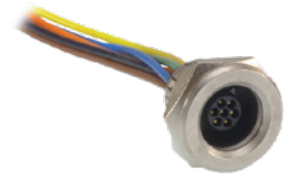



Plug

Part Number By Shell Size	A Max.	B Max.	C Ref.	Avg. Weight oz. (gm.)±5%
MIKQ6-7S	.385 (9.78)	.305 (7.75)	.180 (4.57)	.214 (6.08)
MIKQ6-19S	.515 (13.08)	.405 (10.29)	.260 (6.60)	.376 (10.70)
MIKQ6-37S	.760 (19.30)	.635 (16.13)	.350 (8.89)	.714 (20.23)

*Std. Conn. not supplied with Cable Nut & Grip, See Mod Codes. Lanyard Relase Is Available. Consult factory.

Receptacle

Part Number By Shell Size	A Max.	B Max.	C Max.	D Thread	Avg. Weight oz. (gm.)±5%
MIKQ7-7S	.510 (12.95)	.245 (6.22)	.359 (9.12)	3/8-32UNEF-2A	.128 (3.63)
MIKQ7-19P	.575 (14.60)	.345 (8.76)	.470 (11.94)	1/2-28UNEF-2A	.214 (6.08)
MIKQ7-37P	.855 (21.71)	.520 (13.20)	.740 (18.80)	3/4-20UNEF-2A	.300 (8.52)

MIKQ Front Panel Mounting

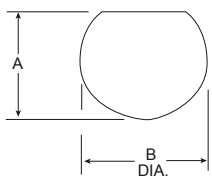

Front Panel Mounting-MIKQ7

Shell Size	A ± .005 (0.13)	B DIA.
MIKQ7-7P	.364 (9.24)	.390 (9.91)
MIKQ7-19P	.475 (12.06)	.515 (13.08)
MIKQ7-37P	.740 (18.78)	.755 (19.17)

Dimensions shown in mm
Specifications and dimensions subject to change

Shell Dimensions

MIKQ9-7P (Back Panel Mounting)

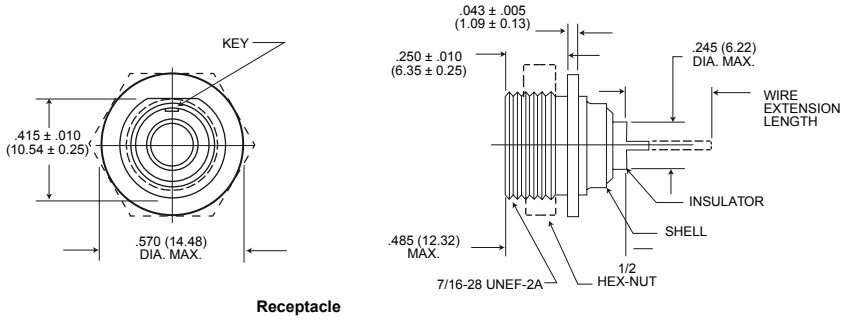

Receptacle

MIKQ9-19P (Back Panel Mounting)

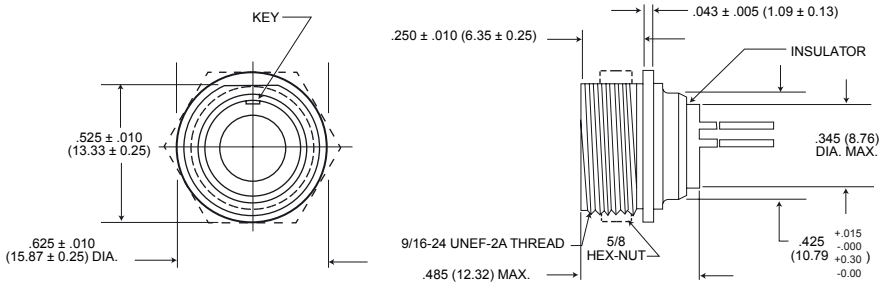

Receptacle

MIKQ9-37P (Back Panel Mounting)

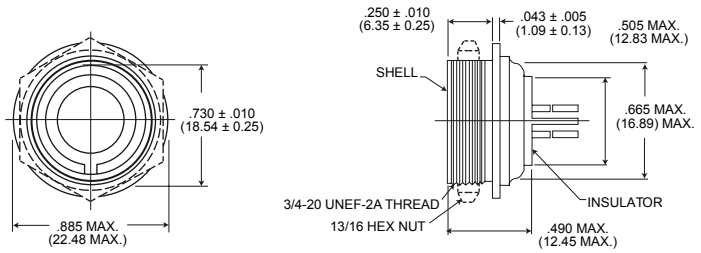

Receptacle

MIKQ Rear Panel Mounting

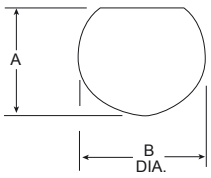

Rear Panel Mounting-MIKQ9

Shell Size	A ± .005 (0.13)	B DIA.
MIKQ9-7P	.425 (10.76)	.440 (11.18)
MIKQ9-19P	.535 (13.58)	.564 (14.33)
MIKQ9-37P	.740 (18.78)	.755 (19.17)

Microstrips .050" Contact Spacing

MT

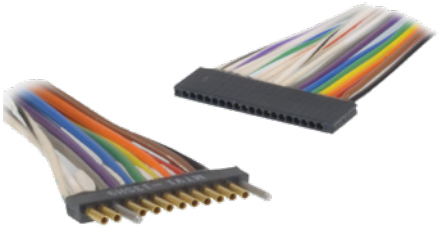

Cannon Microstrips are available in three termination styles: solder cup, pigtail harness and printed circuit leads. The MicroPin Contact System assures maximum performance in a minimum design package. Available with latches or guide pins, our Microstrips provide an extremely dense and reliable interconnection and offer greater application flexibility

Product Features

- High Performance MicroPin Contact System
- High-density .050" contact spacing
- Pre-wired for ease of installation
- Fully potted wire terminations
- Guide pins for alignment and polarizing
- Quick-disconnect latches
- 3 Amp current rating
- Precision crimp terminations
- Solder cup, pigtail or printed circuit terminations
- Surface mount leads

MicroPin Contact System

The Cannon MicroPin Contact System offers uncompromised performance in downsized interconnects. The beryllium copper pin contact is fully recessed in the insulator, assuring positive contact alignment and robust performance. The socket contact is precision machined from high strength copper alloy and features a smooth lead-in chamfer.

The MicroPin features seven points of electrical contact. This contact system assures high normal force, excellent wipe and superior shock and vibration performance.

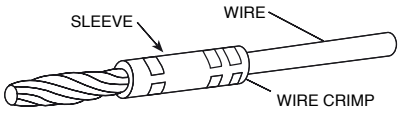

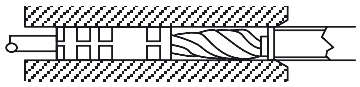

Specifications

Current Rating	3 Amps max
Dielectric Withstanding Voltage	600 VAC @ sea level; 300 VAC @ 70,000 feet altitude
Insulation Resistance	5000 megohms min.
Contact Resistance	8 milliohms max.
Operating Temperature	MTV polyester -56°C to +125°C; MTB diallyl phthalate -55°C to +150°C
Durability	500 cycles min.
Shock/Vibration	20 G's
Connector Mating Force	(8 oz.) x (# of contacts)
Latch Retention	5 lbs. min.
Wire Size	#26 AWG insulated wire, #25 AWG uninsulated solid wire. MT strips will also accommodate #24 AWG through #32 AWG. For other wiring options contact the factory for ordering information. General Performance requirements in accordance with MIL-DTL-83513

Materials and Finishes

Insulator	MTV: Glass-filled polyester per MIL-M-24519; MTB: Glass-filled diallyl phthalate per MIL-M-14
Contact	Copper Alloy per MIL-DTL-83513
Contact Finish	50 Microinches Min. Gold Plated per MIL-G-45204
Insulated Wire	#26 AWG. 19/38 Stranded, silver-plated copper, TFE Teflon insulation per MIL-W-16878/4
Uninsulated Solid Wire	#25 AWG gold-plated copper per QQ-W-343
Potting Material/Contact Encapsulant	Epoxy
Latch	300 series stainless steel, passivated

Dimensions shown in mm
Specifications and dimensions subject to change

Microstrips .050" Contact Spacing

How to Order

R	MTV1	-	16	P	H001	01

RoHS Compliance

Series
MTB1 – High Temperature Diallyl Phthalate 150°C (Recommended for severe environments)
MTV1 – Polyester 125°C (Recommended for general purpose use), .050" contact spacing
MTV2 – Polyester 125°C (Recommended for general purpose use), .100" contact spacing

Number of Cavities
2 through 40.
This number is the total number of cavities including guide pins and latches. 40 positions is the maximum recommended size for standard strips, but sizes up to 120 positions are available on request.

Insert Arrangements
P- Pin
S – Socket

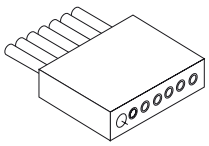
Pin Strip

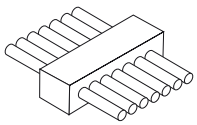
Socket Strip

Termination Style

Solder Cup contacts for customer termination
S

Pre-wired Pigtails
H067 – Pre-wired pigtail with 18" of insulated Teflon wire per M22759/11, #26 AWG, 19 strand, yellow
HY01 – Pre-wired pigtail with 18" of insulated Teflon wire per M22759/11, #26 AWG, 19 strand, 10 color repeating

Straight Terminals .018" diameter, gold-plated
L1 – 5" extension
L2 – 1" extension
L57 – .190" extension
L61 – .125" extension



Right Angle Terminals staggered footprint .018" diameter, gold plated
AL57 – .190" extension
AL61 – .125" extension

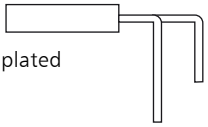

Right Angle Terminals .050" in-line footprint .018" diameter, gold plated
BL57 – .190" extension
BL61 – .125" extension

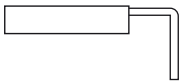

Surface Mount .018" diameter, gold-plated
CL1

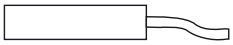

Guide Pin and Latch Options
01 – Guide pin installed in end cavities of socket strip. Blank holes in end cavities of pin strip.
02 – Guide pin installed in cavity #1 of socket Strip. Blank holes in cavity #1 of pin strip.
03 – Spring latches installed in end cavities of socket strip. Latch clips installed in end cavities of pin strip. For use with MTV1 only.
04 – Spring latch installed in center cavity of socket strip. Spring latch installed in center cavity of pin strip. For use with MTV1 only.

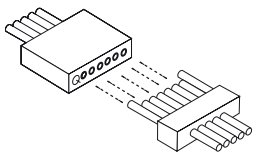
01
Guide Pins In End Cavities

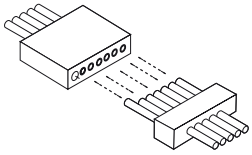
02
Guide Pins In Cavity #1

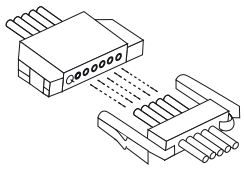
03
End Latches

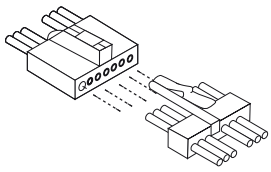
04
Center Latch

RoHS COMPLIANT PART NUMBERS

Connector Weights

Contact (with std. 1/2" copper pigtails)				.040 gms.
		MTB	pin	.021 gms.
Insulator (per contact cavity)		MTV	socket	.006 gms.
			pin	.014 gms.
			socket	.004 gms.
Guide Post		Stainless Steel		.035 gms.
Latch		Male		.035 gms.
		Female		.074 gms.

Terminal Dimensions

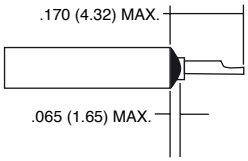

Solder Cup

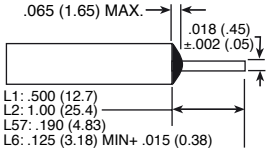

Straight Terminals

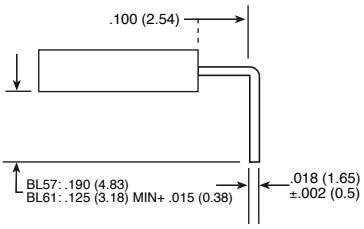

Right Angle Terminals .050" Centers

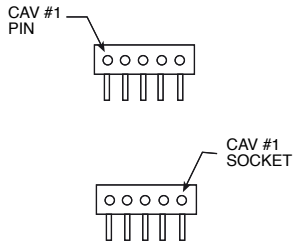

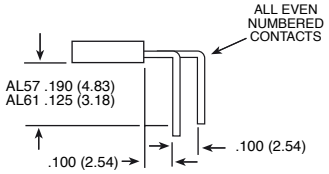

Right Angle Terminals .100" Spacing Staggered

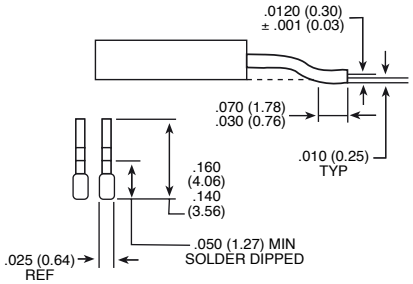

Surface Mount Terminals

Dimensions shown in mm
Specifications and dimensions subject to change

Microstrips .050" Contact Spacing

Latch Dimensions

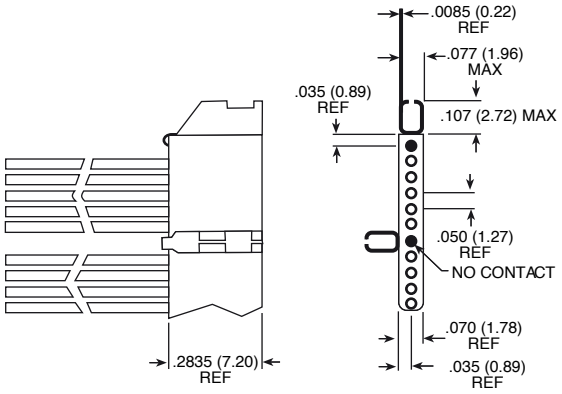

Female Latch

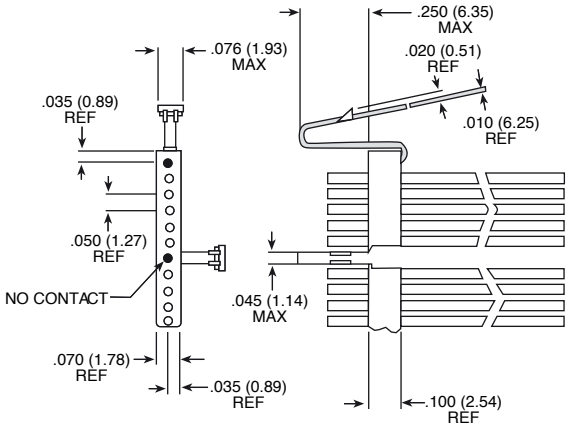

Male Latch

Guide Pin Dimensions

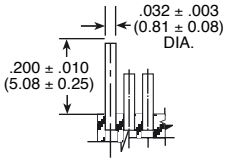

Standard Wire Termination Codes

The following termination codes are listed for your information.
For additional codes please refer to Appendix on pp. 74-76.
All wire lengths are minimum.

Harness Type (H)

#26 AWG per MIL-W-16878 Type E; Teflon Stranded

Length	All Yellow	Color Coded
3 (76.2)	H020	H027
6 (152.4)	H019	H016
8 (203.2)	H026	H034
10 (254.0)	H029	H025
12 (304.8)	H028	H002
18 (457.2)	H001	H003
20 (508.0)	H033	H023
24 (609.6)	H009	H004
30 (762.0)	H010	H005
36 (914.4)	H011	H006
48 (1219.2)	H013	H048
72 (1828.8)	H017	H046
120 (3048.0)	H042	H041

Solid Uninsulated Type - (L)

#25 AWG Gold Plated Copper

Termination Code	Length
L61	.125 (3.18)
L56	.150 (3.81)
L57	.190 (4.83)
L39	.250 (6.35)
L58	.375 (9.52)
L1	.500 (12.70)
L14	.750 (19.05)
L2	1.000 (25.40)
L7	1.500 (38.10)
L6	2.000 (50.80)
L16	2.500 (63.50)
L10	3.000 (76.20)

Polarization

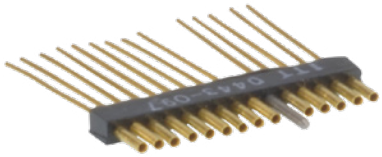

Modification code "-01" in the Microminiature Strip part number refers to guide posts, which are located on both ends of the socket side of the 50-MIL STRIP connector and feature empty cavities on the pin side to accept the guide posts. Although in many cases it is not necessary to polarize 50-MIL STRIP connectors, there are several ways to prevent cross plugging. One method is the use of guide posts that can be located in specified cavities to ensure the contacts will align when these posts are positioned before mating.

MTB1 and MTV1 - .050 (1.27) Contact Centers

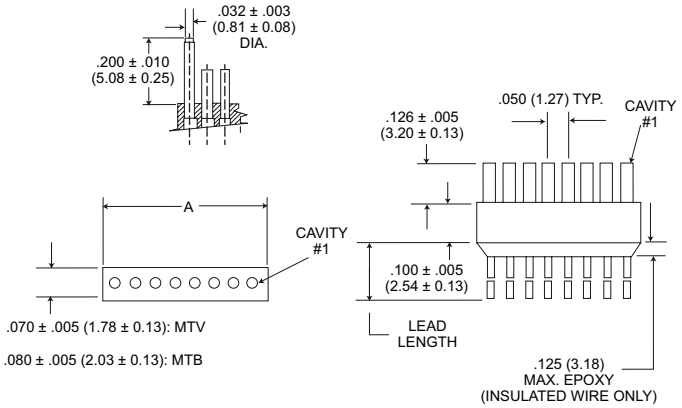

Receptacle

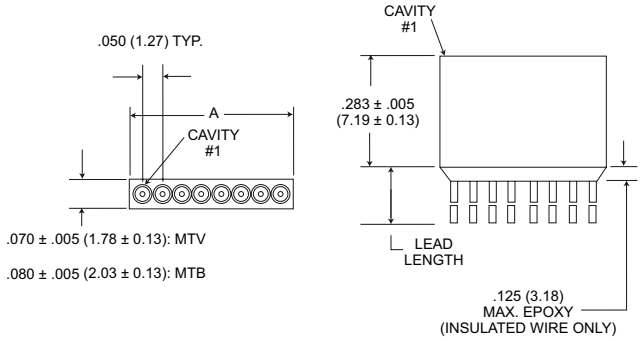

Plug

Part Number By Size	A ±.015 (0.38)	Part Number By Size	A ±.015 (0.38)	Part Number By Size	A ±.015 (0.38)	Part Number By Size	A ±.015 (0.38)	Part Number By Size	A ±.015 (0.38)	Part Number By Size	A ±.015 (0.38)
MT*1-1**	.070 (1.78)	MT*1-21**	1.070 (27.18)	MT*1-41**	2.070 (52.58)	MT*1-61**	3.070 (77.98)	MT*1-81**	4.070 (103.38)	MT*1-101**	5.070 (128.78)
MT*1-2**	.120 (3.05)	MT*1-22**	1.120 (28.45)	MT*1-42**	2.120 (53.85)	MT*1-62**	3.120 (79.25)	MT*1-82**	4.120 (104.65)	MT*1-102**	5.120 (130.05)
MT*1-3**	.170 (4.32)	MT*1-23**	1.170 (29.72)	MT*1-43**	2.170 (55.12)	MT*1-63**	3.170 (80.52)	MT*1-83**	4.170 (105.92)	MT*1-103**	5.170 (131.32)
MT*1-4**	.220 (5.59)	MT*1-24**	1.220 (30.99)	MT*1-44**	2.220 (56.39)	MT*1-64**	3.220 (81.79)	MT*1-84**	4.220 (107.19)	MT*1-104**	5.220 (132.59)
MT*1-5**	.270 (6.85)	MT*1-25**	1.270 (32.36)	MT*1-45**	2.270 (57.66)	MT*1-65**	3.270 (83.06)	MT*1-85**	4.270 (108.46)	MT*1-105**	5.270 (133.86)
MT*1-6**	.320 (8.13)	MT*1-26**	1.320 (33.53)	MT*1-46**	2.320 (58.93)	MT*1-66**	3.320 (84.33)	MT*1-86**	4.320 (109.73)	MT*1-106**	5.320 (135.13)
MT*1-7**	.370 (9.40)	MT*1-27**	1.370 (34.80)	MT*1-47**	2.370 (60.20)	MT*1-67**	3.370 (85.60)	MT*1-87**	4.370 (111.00)	MT*1-107**	5.370 (136.40)
MT*1-8**	.420 (10.67)	MT*1-28**	1.420 (36.07)	MT*1-48**	2.420 (61.47)	MT*1-68**	3.420 (86.87)	MT*1-88**	4.420 (112.27)	MT*1-108**	5.420 (137.67)
MT*1-9**	.470 (11.94)	MT*1-29**	1.470 (37.34)	MT*1-49**	2.470 (62.74)	MT*1-69**	3.470 (88.14)	MT*1-89**	4.470 (113.54)	MT*1-109**	5.470 (138.94)
MT*1-10**	.520 (13.60)	MT*1-30**	1.520 (38.61)	MT*1-50**	2.520 (64.01)	MT*1-70**	3.520 (89.41)	MT*1-90**	4.520 (114.81)	MT*1-110**	5.520 (140.21)
MT*1-11**	.570 (14.48)	MT*1-31**	1.570 (39.88)	MT*1-51**	2.570 (65.28)	MT*1-71**	3.570 (90.68)	MT*1-91**	4.570 (116.08)	MT*1-111**	5.570 (141.48)
MT*1-12**	.620 (15.75)	MT*1-32**	1.620 (41.15)	MT*1-52**	2.620 (66.55)	MT*1-72**	3.620 (91.95)	MT*1-92**	4.620 (117.35)	MT*1-112**	5.620 (142.75)
MT*1-13**	.670 (17.02)	MT*1-33**	1.670 (42.42)	MT*1-53**	2.670 (67.82)	MT*1-73**	3.670 (93.22)	MT*1-93**	4.670 (118.62)	MT*1-113**	5.670 (144.02)
MT*1-14**	.720 (18.29)	MT*1-34**	1.720 (43.69)	MT*1-54**	2.720 (69.09)	MT*1-74**	3.720 (94.49)	MT*1-94**	4.720 (119.89)	MT*1-114**	5.720 (145.29)
MT*1-15**	.770 (19.56)	MT*1-35**	1.770 (44.96)	MT*1-55**	2.770 (70.36)	MT*1-75**	3.770 (95.76)	MT*1-95**	4.770 (121.16)	MT*1-115**	5.770 (146.56)
MT*1-16**	.820 (20.83)	MT*1-36**	1.820 (46.23)	MT*1-56**	2.820 (71.63)	MT*1-76**	3.820 (97.03)	MT*1-96**	4.820 (122.43)	MT*1-116**	5.820 (147.83)
MT*1-17**	.870 (22.10)	MT*1-37**	1.870 (47.50)	MT*1-57**	2.870 (72.90)	MT*1-77**	3.870 (98.30)	MT*1-97**	4.870 (123.70)	MT*1-117**	5.870 (149.10)
MT*1-18**	.920 (23.37)	MT*1-38**	1.920 (48.77)	MT*1-58**	2.920 (74.17)	MT*1-78**	3.920 (99.57)	MT*1-98**	4.920 (124.97)	MT*1-118**	5.920 (150.37)
MT*1-19**	.970 (24.64)	MT*1-39**	1.970 (50.04)	MT*1-59**	2.970 (75.44)	MT*1-79**	3.970 (100.84)	MT*1-99**	4.970 (126.24)	MT*1-119**	5.970 (151.64)
MT*1-20**	1.020 (25.91)	MT*1-40**	2.020 (51.31)	MT*1-60**	3.020 (76.71)	MT*1-80**	4.020 (102.11)	MT*1-100*	5.020 (127.50)	MT*1-120**	6.020 (152.91)

*For jackpost, add letter "P" or "M7" for sizes 9-51, "M17" for size 100.

Dimensions shown in mm
Specifications and dimensions subject to change

Microminiature Strip - .100/.050" Contact Spacing MT

MTB2 and MTV2 - .100 (2.54) Contact Centers

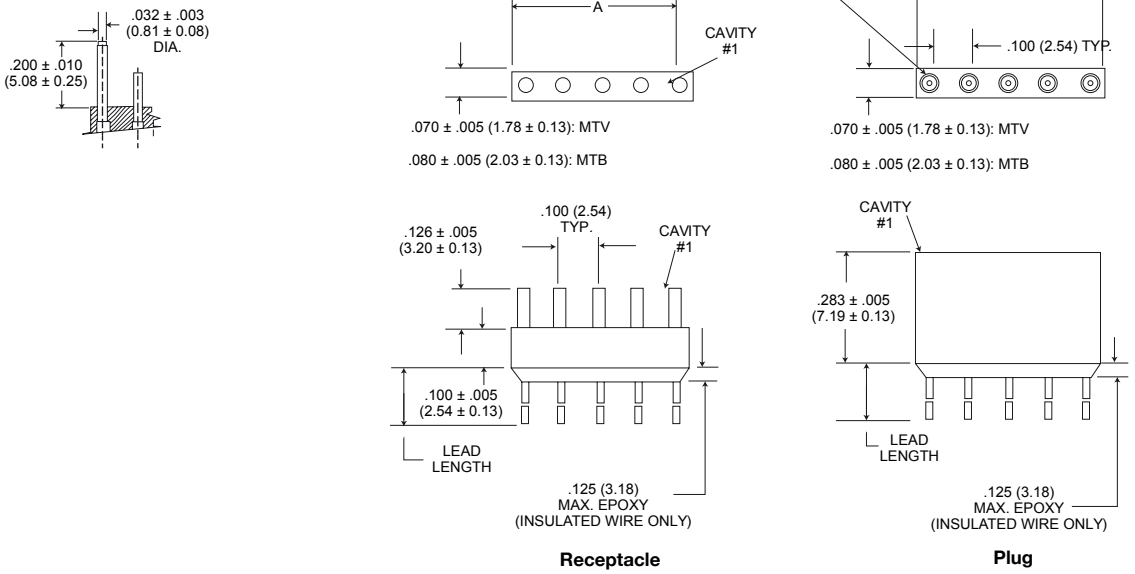

Receptacle **Plug**

Part Number By Size	A ±.015 (0.38)	Part Number By Size	A ±.015 (0.38)
MT*2-1**	.070 (1.78)	MT*2-31**	3.070 (77.98)
MT*2-2**	.170 (4.32)	MT*2-32**	3.170 (80.52)
MT*2-3**	.270 (6.86)	MT*2-33**	3.270 (83.06)
MT*2-4**	.370 (9.40)	MT*2-34**	3.370 (85.60)
MT*2-5**	.470 (11.94)	MT*2-35**	3.470 (88.14)
MT*2-6**	.570 (14.48)	MT*2-36**	3.570 (90.68)
MT*2-7**	.670 (17.02)	MT*2-37**	3.670 (93.22)
MT*2-8**	.770 (19.56)	MT*2-38**	3.770 (95.76)
MT*2-9**	.870 (22.10)	MT*2-39**	3.870 (98.30)
MT*2-10**	.970 (24.64)	MT*2-40**	3.970 (100.84)
MT*2-11**	1.070 (27.18)	MT*2-41**	4.070 (103.38)
MT*2-12**	1.170 (29.72)	MT*2-42**	4.170 (105.92)
MT*2-13**	1.270 (32.26)	MT*2-43**	4.270 (108.46)
MT*2-14**	1.370 (34.80)	MT*2-44**	4.370 (111.00)
MT*2-15**	1.470 (37.34)	MT*2-45**	4.470 (113.54)
MT*2-16**	1.570 (39.88)	MT*2-46**	4.570 (116.08)
MT*2-17**	1.670 (42.42)	MT*2-47**	4.670 (118.62)
MT*2-18**	1.770 (44.96)	MT*2-48**	4.770 (121.16)
MT*2-19**	1.870 (47.50)	MT*2-49**	4.870 (123.70)
MT*2-20**	1.970 (50.04)	MT*2-50**	4.970 (126.24)
MT*2*21**	2.070 (52.58)	MT*2*51**	5.070 (128.78)
MT*2-22**	2.170 (55.12)	MT*2-52**	5.170 (131.32)
MT*2-23**	2.270 (57.66)	MT*2-53**	5.270 (133.86)
MT*2-24**	2.370 (60.20)	MT*2-54**	5.370 (136.40)
MT*2-25**	2.470 (62.74)	MT*2-55**	5.470 (138.94)
MT*2-26**	2.570 (65.28)	MT*2-56**	5.570 (141.48)
MT*2-27**	2.670 (67.82)	MT*2-57**	5.670 (144.02)
MT*2-28**	2.770 (70.36)	MT*2-58**	5.770 (146.56)
MT*2-29**	2.870 (72.90)	MT*2-59**	5.870 (149.10)
MT*2-30**	2.970 (75.44)	MT*2-60**	5.970 (151.64)

Micro Edgeboard - .050" Contact Spacing MEB

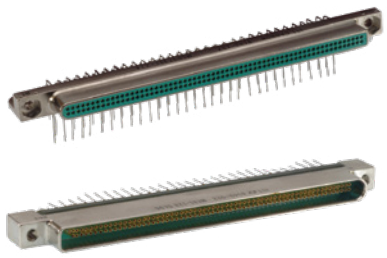

Cannon's Micro Edgeboard (MEB) Connector Series incorporates the proven Micro-Pin / Micro-Socket contact, which features an outstanding record of reliability and performance. Our MEB features machined aluminum shells for ruggedness, diallyl phthalate insulator for top electrical performance and a 36-position polarization key system to prevent cross plugging. Contacts are on .050 (1.27) center spacing. Termination types include 90˚ or right angle pigtails for multi-layered PC boards and "coke bottle" termination for double-sided PC boards. Harnessing capability is available for both pin and socket sides. The MEB, including the SBR 90˚ or right angle variation available for multi-layer boards, can be mounted on the female (daughter) side of double or single-sided PC boards. The mating male (mother) board side can have the terminations formed to meet the application demands. Conforms to MIL-C-55302/120 thru 123 (not qualified).

Specifications

MATERIAL AND FINISHES	
Shell	6061-T6 Aluminum Alloy per QQ-A-200/8 or QQ-A-225/8, electroless nickel per SAE AMS-C-26074, Class 4, except .0010 to .0015 (0.03 to 0.04) thick or conversion coating per MIL-C-5541, Class 3, color gold.
Contact, Pin and Socket:	Copper Alloy, 50 microinch gold per ASTM B488, Type II, Code C, Class 1.25
Jackscrew/Jackpost:	303 stainless steel, passivated per QQ-P-35.
Insulator:	Glass-filled diallyl phthalate per MIL-M-14, Type SDG-F, color green Polyester per MIL-M-24519, Type GPT-30F, color black available for MEB-128 upon request.

TERMINATION TYPES
Consult factory for stranded wie lead modifications codes.

MECHANICAL FEATURES	
Size or Length:	2 sizes
Coupling:	Friction/Jackscrew
Polarization:	Shells, polarizing keys (36 positions)
Contact Spacing Centers:	.050 (1.27)
Polarization	Keyways
Shell Styles:	Plug and receptacle

How to Order

R	MEB	1	-	128	P	*	**	***

RoHS Compliance
Series Prefix
Contact Spacing
Layout
Contact Type
Termination Modification
Lead Length
Other Modifications

Series Prefix
MEB - Micro edgeboard, plug with twist pin contacts or recept. with microsocket contacts.

Contact Spacing
1 - .050 (1.27) centers 128/184
2 - .100 (2.54) centers 64/92 (alternate contact holes)

Layout
64, 92, 128, 184

Contact Type
P - Pin
S - Socket

Termination Modifications
L - Uninsulated solid wire
H - Insulated stranded round harness wire
S - Solder pots
BR - PC board right angle, socket side only

Lead Length
Consult factory for wire lead modification codes.

Other Modifications
Consult factory

RoHS COMPLIANT PART NUMBERS

Dimensions shown in mm
Specifications and dimensions subject to change

Micro Edgeboard - .050" Contact Spacing MEB

Plug (Mother Board)

MEB-128P

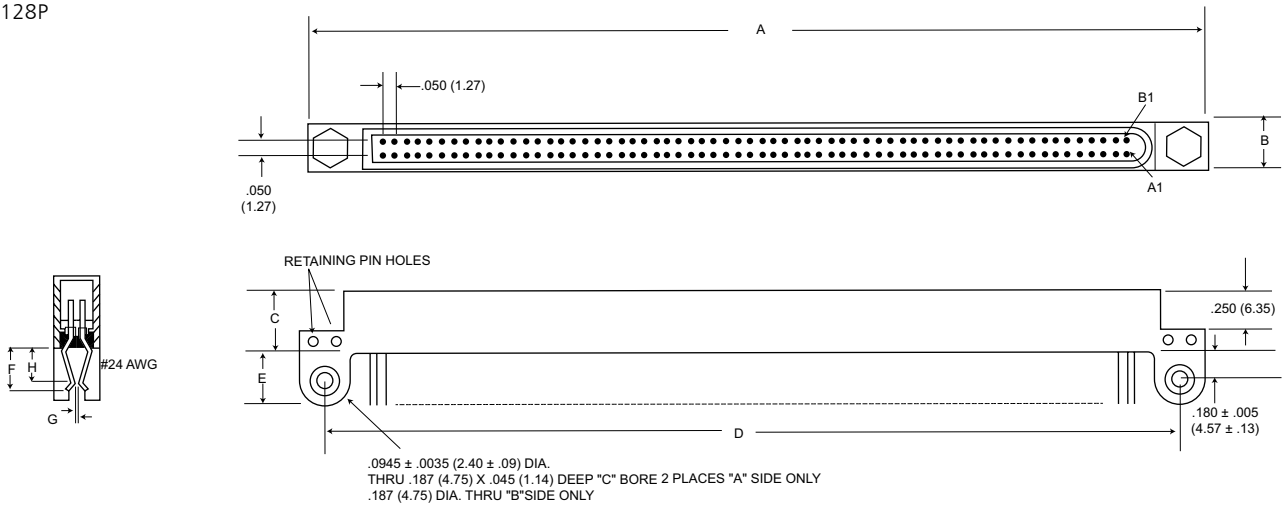

Part No.	Weight oz. (gm.) Max.	A ±.015 (0.38)	B ±.010 (0.25)	C ±.010 (0.25)	D ±.010 (0.25)	E ±.010 (0.25)	F Max.	G* Max.	H ±.020 (0.51)
128P	.5 (14.17)	3.950 (100.33)	.250 (6.35)	.400 (10.16)	3.700 (93.98)	.300 (7.62)	.280 (7.11)	.030 (0.76)	.200 (5.08)
128PBR	.5 (14.17)								

*Will accept up to .093 (2.36) thick P.C. Board with shell modifications.

Receptacle (Daughter Board)

MEB1-12BS

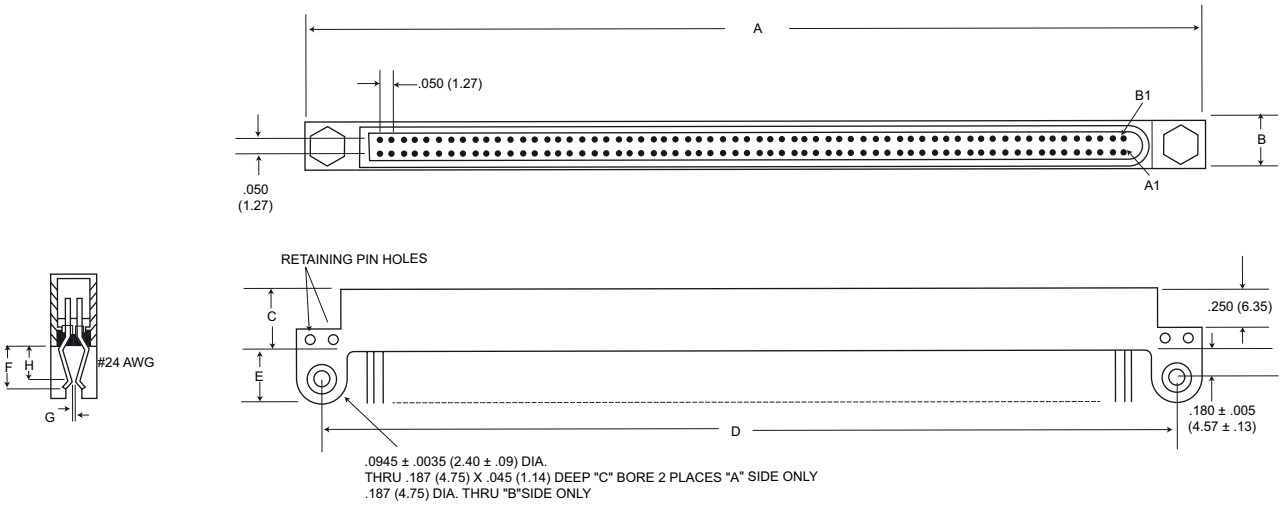

Part No.	Weight oz. (gm.) Max.	A ±.015 (0.38)	B ±.010 (0.25)	C ±.010 (0.25)	D ±.010 (0.25)	E ±.010 (0.25)	F Max.	G* Max.	H ±.020 (0.51)
128S	.5 (14.17)	3.950 (100.33)	.250 (6.35)	.400 (10.16)	3.700 (93.98)	.300 (7.62)	.280 (7.11)	.030 (0.76)	.200 (5.08)
128SBR	.5 (14.17)								

*Will accept up to .093 (2.36) thick P.C. Board with shell modifications.

Micro Edgeboard - .050" Contact Spacing

MEB

Plug (Mother Board)

MEB1-184P

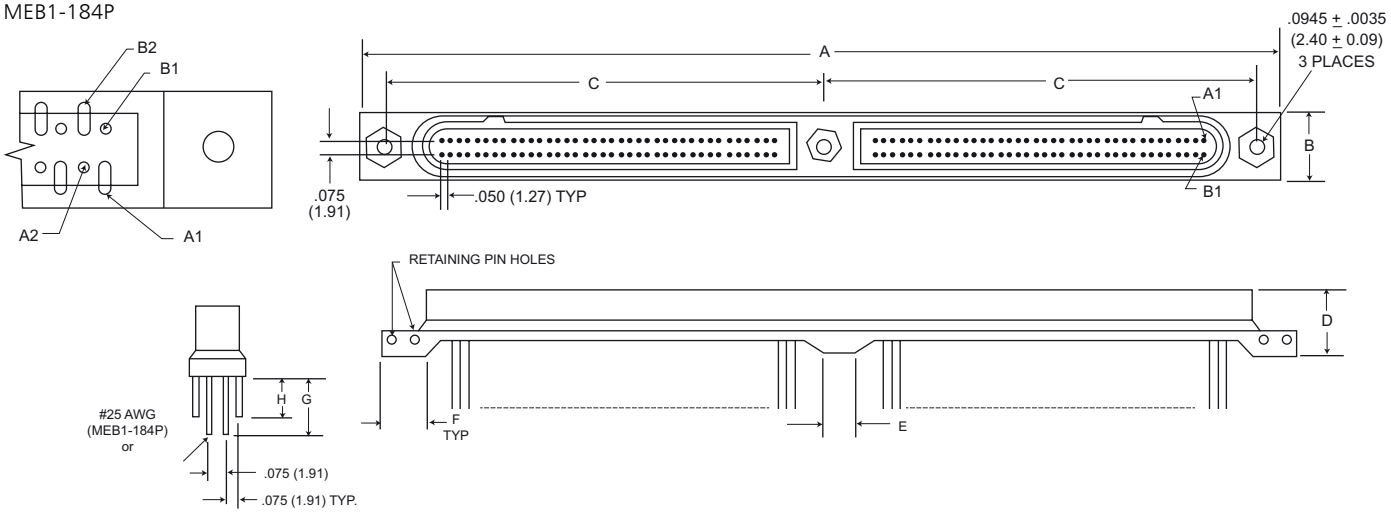

Part No.	Weight oz. (gm.) Max.	A ±.015 (0.38)	B ±.010 (0.25)	C ±.005 (0.13)	D ±.010 (0.25)	E ±.010 (0.25)	F ±.010 (0.25)	G* ±.010 (0.25	H ±.025 (0.64)
184P	1.0 (28.35)	5.800 (147.32)	.343 (8.71)	2.775 (70.49)	.400 (10.16)	.250 (6.35)	.280 (7.11)	.350 (8.89)	.275 (6.99)

*Will accept up to .093 (2.36) thick P.C. Board with shell modifications.

Receptacle (Daughter Board)

MEB1-184S

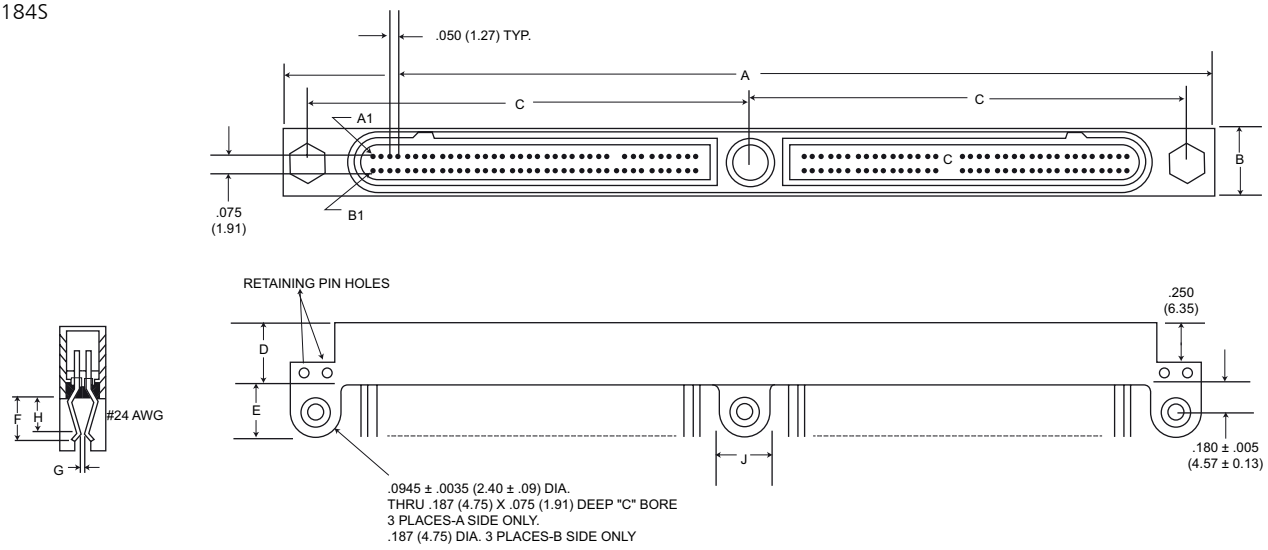

Part No.	Weight oz. (gm.) Max.	A ±.015 (0.38)	B ±.010 (0.25)	C ±.005 (0.13)	D ±.010 (0.25)	E ±.010 (0.25)	F Max.	G* Max.	H ±.020 (0.51)	H ±.010 (0.25)
184S	1.0 (28.35)	5.800 (147.32)	.343 (8.71)	2.775 (70.49)	.400 (10.16)	.300 (7.62)	.280 (7.11)	.030 (0.76)	.200 (5.08)	.250 (6.35)
184SBR	1.0 (28.35)									

All round pigtail #25 AWG wire termination designs available for the MEB1-12B receptacle will apply on the MEB1-184 series also.
*Will accept up to .093 (2.36) thick P.C. Board with shell modifications.

Dimensions shown in mm
Specifications and dimensions subject to change

Micro Edgeboard - .050" Contact Spacing MEB

PC Board Right Angle

MEB1-128SBR

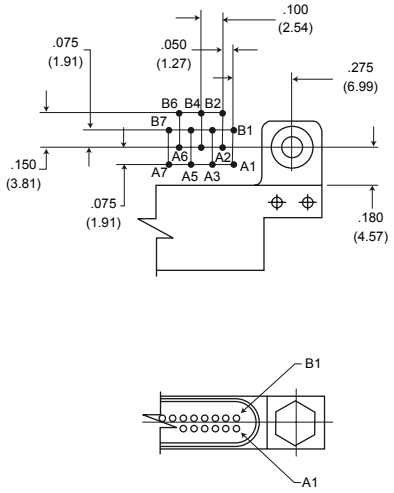

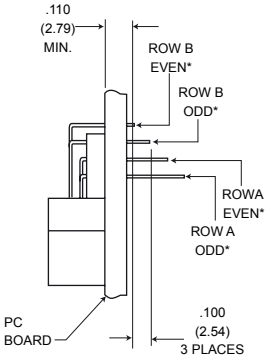

Keying Accessory - Key and Retaining Pin

Polarizing Hardware Kit

MEB-128-P/N 320-9514-003

MEB-184-P/N 320-9514-002

Contains 2 polarizing keys and 4 spiral pins.

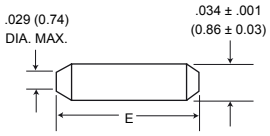

MEB-184
P/N 980-0004-129

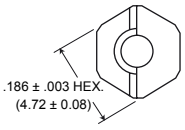

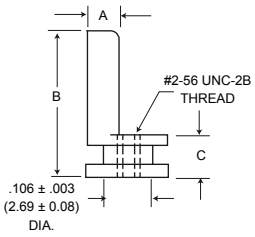

P/N 201-9509-000

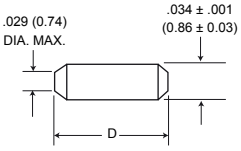

MEB-128
P/N 980-0003-879

Micro Edgeboard - .050" Contact Spacing

Jackscrew/Jackpost Assembly (MEB 64 & 128 Sizes Only)

Jackpost Kit

MEB plug or receptacle-P/N 320-9514-001

Contains 2 bushings and 4 spirals pins

Jackscrew

MEB plug-P/N 320-9521-001

MEB receptacle-P/N 320-9521-000

Contains 2 jackscrew assemblies

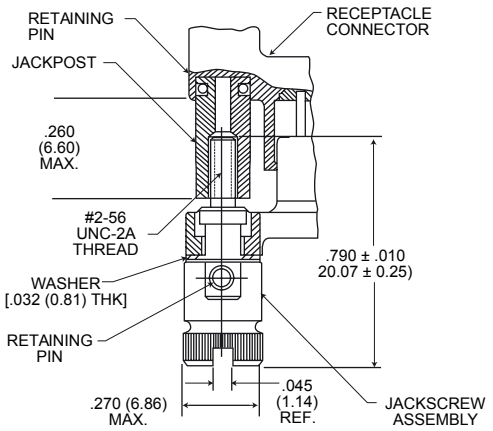

Plug with Jackscrew

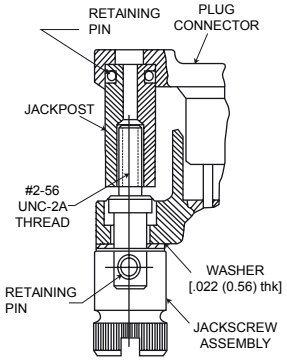

Receptacle with Jackscrew

Special Variations

Alternative Receptacle Configuration

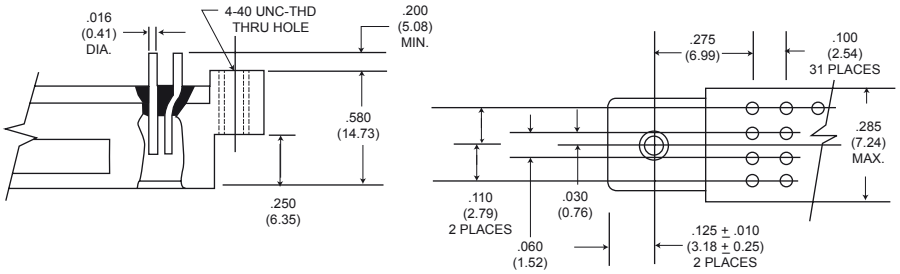

Dimensions shown in mm

Specifications and dimensions subject to change

Cable Assemblies

Turnkey & Custom Cable Solutions for Cannon Microminiature Connectors

We provide complete turnkey and custom cable assemblies across our expansive portfolio of Microminiature Connectors. Our proven, harsh environment interconnects and cable assemblies are used in the most demanding applications and environments including Aerospace, Defense Electronics, Geophysical Exploration, Oil & Gas, High-Speed Computer Networking, Industrial Automation, Medical Electronics, Satellite and Space Communications and Telecommunications.

Our cable assembly expertise and innovative Six Sigma-driven manufacturing processes enable the design and manufacturing of tight pitch cable assemblies in 0.100, 0.075, 0.050 and 0.025 contact spacing, among many others.

For more details, contact your Cannon Account Representative.



Microminiature Cabling Solutions

- Dynamic Custom Cable Assemblies for Harsh Environments
- Custom Micro-D and MIL-DTL-83513 Interconnect Cable Assemblies
- Space Grade Micro Interconnect Cable Assemblies
- High Temperature Harsh Environment Interconnect Assemblies
- Medical Electronics Cable Assemblies

Flex Circuit Cable Assembly

Terminating to Flexible Circuits

For a low profile finish, it is best to terminate flexible circuits in line with the contacts. Since most Microminiature Connectors have contacts set into two or three rows, termination is generally an easy process.

- The diagrams below provide guidance for pad arrangements to suit MDM Microminiature Connectors, ensuring the circuits are inserted into the potting correctly and accurately.
- The length of the pad is optional but it is important to provide enough cover-lay, especially at the edges of the circuit, to avoid delamination. We suggest at least 0,51 mm (.020 inches). Our standard potting shrouds provide support to the circuit with a dimension of 7,00 mm (.275 inches) from the rear of the flange.

Please consult Customer Service for specific flex circuit assembly design considerations and requirements.

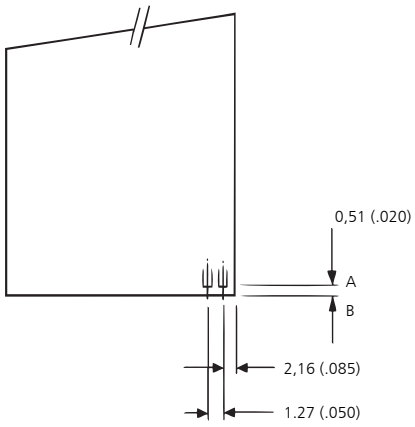

Diagram 1 shows details of the pad spacing and the suggested amount of material to be left between the end of the pad A and the edge of the flex B.

Diagram 2 illustrates how the connector is prepared with short pigtails and a special first pot which just captures the contacts. The final back potting for strength is controlled by our standard 7,00 (.275) potting fixtures.

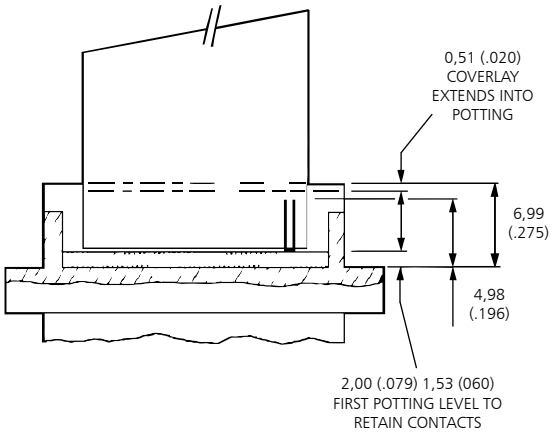

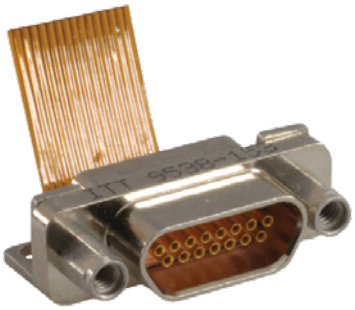

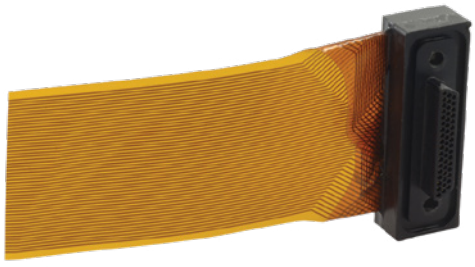

Dimensions shown in mm
Specifications and dimensions subject to change

Custom Backshells for Microminiature Connectors

ITT Cannon offers a wide range of backshell solutions for Microminiature Connectors used in harsh environment applications. Although we do not offer a standard backshell portfolio, Cannon engineers can design and manufacture a range of back fittings for our MDM Series Microminiature Connectors, depending on customer requirements. We offer custom designs using proven banded systems in which the braid is captivated over a chimney-style outlet. These types of backshell systems are aviable in different material finishes and sizes and can be provided with special process termination methods. In addition, ITT Cannon engineers have developed a method of riveting the back fitting to the shell within the jacking area. This option guarantees 360-degree shielding effectiveness even when jackscrews or jacking posts are not being used. When a conduit system is preferred, such as for test box environments in field locations, back fittings and a fully screened weatherproof convoluted trunking can be used. Our engineering team can also provide special back potting style termination systems for environmental protection and strain relief. These backshell style systems are typically filled with epoxy or other encapsulating materials to provide a robust and effective solution.

Sealing Gaskets

We have received requests for gasket materials to seal the MDM connectors into various enclosures. We recommend that you consider wider flanged connectors together with a low cost conductive gasket to provide an adequate surface area. This combination will give you IP-66 sealing with good EMC compliance. The following dimensions for gaskets and flange dimensions are regarded as the minimum that you should consider.

Conductive elastomers generally offer a superior shielding performance when compared with alternatives as in table below.

Gasket Type	Neoprene (wire impregnated)	Silicone (wire impregnated)	Silicone (oriented wire)	Neoprene (fabric wrap)	Metallic finger stock	Metallic fibres	Conductive silicone rubber
Shielding performance	S	S	G	G	G	G	G
Temperature range	S	G	G	S	G	G	G
IP sealing	P	P	S	S	P	P	G
Compression force	G	G	G	G	G	S	S
Compression range	S	S	S	G	G	P	S
Surface texture	P	P	G	P	G	P	S
Compression set	S	S	S	S	G	P	G
Re-usability	S	S	S	S	G	P	G

*Neoprene is a trademark of Dupont P = Poor S = Satisfactory G = Good

Conductive rubber gaskets can be loaded with many different metallic fillers but the choice of material is dependent upon a number of factors such as level of conductivity, shielding effectiveness, galvanic compatibility and cost.

Galvanic Corrosion can occur when two dissimilar metals are in contact with one another in the presence of an electrolyte. The type of gasket material has to be assessed because of the use of metallic fillers. Many applications are dry indoor environments where corrosion is not a major concern. However, for external use, particularly marine, it is recommended that consideration be given to compatibility. The table on the next page is a summary.

Enclosure Material	Silver/Nickel	Silver/Copper	Silver/aluminum	Inert aluminum	Silver/Glass	Silver	Nickel/Graphit	Nickel
Aluminum alloys	X	X	1	▲	X	X	1	1
Magnesium alloys	X	X	1	1	X	X	1	1
Stainless steel	▲	▲	▲	▲	▲	▲	▲	▲
Copper alloys	▲	▲	▲	▲	▲	▲	▲	▲
Cadmium plating	X	X	1	1	X	X	1	1
Tin plating	1	X	1		1	1	▲	▲
Nickel plating	▲	1	1	▲	▲	▲	▲	▲
Chromium plating	▲	▲	▲	▲	▲	▲	▲	▲
Silver plating	▲	▲	▲	▲	▲	▲	▲	▲
Zinc & galvanise plating	X	X	1	1	X	X	1	1
Titanium	▲	▲	▲	▲	▲	▲	▲	▲

▲ = good 1 = Satisfactory X = Not recommended

Appendix

"L" Code Chart

SORTED BY LENGTH		
Wire Length, IN.		
Decimal	Fraction	Code
0.080		L63
0.094	3/32	L62
0.110		L65
0.125	1/8	L61
0.140		L67
0.150		L56
0.171		L66
0.187	3/16	L17
0.190		L57
0.210		L59
0.250	1/4	L39
0.312	3/8	L60
0.375	3/8	L58
0.380		L64
0.500	1/2	L1
0.625	5/8	L12
0.750	3/4	L4
1.000		L2
1.500		L7
2.000		L6
2.250		L25
2.500		L16
3.000		L10
3.500		L15
4.000		L11
4.500		L28
5.000		L9
6.000		L3
7.000		L8
8.000		L18
9.000		L45
10.000		L13
11.500		L52
12.000		L4
15.000		L46
18.000		L55
20.000		L5

SORTED BY CODE		
Wire Length, IN.		
Code	Decimal	Fraction
L1	0.500	1/2
L2 1	.000	
L3	6.000	
L4	12.000	
L5	20.000	
L6	2.000	
L7	1.500	
L8	7.000	
L9	5.000	
L10	3.000	
L11	4.000	
L12	0.625	5/8
L13	10.000	
L14	0.750	3/4
L15	3.500	
L16	2.500	
L17	0.187	3/16
L18	8.000	
L25	2.250	
L28	.500	
L39	0.250	1/4
L45	9.000	
L46	15.000	
L52	11.500	
L55	18.000	
L56	0.150	
L57	0.190	
L58	0.375	3/8
L59	0.210	
L60	0.312	5/16
L61	.0125	1/8
L62	0.094	3/32
L63	0.080	
L64	0.380	
L65	0.110	
L66	0.171	
L67	0.140	

#25AWG, SOLID COPPER WIRE PER QQ-W-343,
TYPE "S", GOLD PLATED PER MIL-G-45204, TYPE
II GRADE C OR D, CLASS 1 (50 MICROINCHES MINIMUM)

Nano "L" Code Charts on page 80.

Appendix

"H" Code Charts

16878/4

Wire, Electrical, Polyetrafluorethylene (PTFE) Insulated, 200 Degrees C, 600 Volts, Extruded Insulation

Length	Yellow	White	System 1
1	030	C30	A30
2	024	C24	A24
3	020	C20	027
4	–	C33	033
5	031	C31	A31
6	019	047	016
8	026	C26	034
9	015	C15	A15
10	029	C29	025
12	028	008	002
16	039	C39	A39
17	036	C36	A36
18	001	044	003
20	038	C38	023
21	055	C55	A55
24	009	045	004
30	010	C10	005
35	018	C18	A18
36	011	058	006
40	037	C37	A37
42	012	021	A12
48	013	C13	048
50	040	C40	A40
60	014	C14	056
72	017	059	046
80	032	C32	A32
92	022	C22	A22
96	035	C35	A35
120	042	C42	041
180	043	C43	A43

22759/11-26

Wire, Electrical, Fluoropolymer-Insulated, Extruded TFE, Silver-Coated Copper Conductor, 600 Volt

Length	White	10 Color Repeat	System 1
1	G30	Y30	H30
2	G24	Y24	H24
3	G20	Y20	H20
4	G33	Y33	H33
5	G31	Y31	H31
6	065	Y19	072
8	G26	Y26	H26
9	G15	Y15	H15
10	G29	Y29	H29
12	066	Y28	073
16	G39	Y39	H39
17	G36	Y36	H36
18	067	Y01	074
20	G38	Y38	H38
21	G55	Y55	H55
24	068	Y09	075
30	G10	Y10	H10
35	G18	Y18	H18
36	069	Y11	076
40	G37	Y37	H37
42	G12	Y12	H12
48	070	Y13	077
50	G40	Y40	H40
60	G14	Y14	H14
72	071	Y17	078
80	G32	Y32	H32
92	G22	Y22	H22
96	G35	Y35	H35
120	G42	Y42	H42
180	G43	Y43	H43

22759/33-26

Wire, Electrical, Fluoropolymer-Insulated, Crosslinked Modified, ETFE, Lightweight, Silver-Coated, High-Strength Copper Alloy 200 Degrees C, 600 Volt

Length	White	10 Color Repeat	System 1
1	V30	W30	X30
2	V24	W24	X24
3	V20	W20	X20
4	V33	W33	X33
5	V31	W31	X31
6	V19	W19	X19
8	V26	W26	X26
9	V15	W15	X15
10	V29	W29	X29
12	V28	W28	X28
16	V39	W39	X39
17	V36	W36	X36
18	V01	W01	X01
20	V38	W38	X38
21	V55	W55	X55
24	V09	W09	X09
30	V10	W10	X10
35	V18	W18	X18
36	V11	W11	X11
40	V37	W37	X37
42	V12	W12	X12
48	V13	W13	X13
50	V40	W40	X40
60	V14	W14	X14
72	V17	W17	X17
80	V32	W32	X32
92	V22	W22	X22
96	V35	W35	X35
120	V42	W42	X42
180	V43	W43	X43

Nano "H" Code Charts on page 82.

Appendix

MIL-STD-681 Wire Color Code

Reference Data

PIN No.	MIL-STD-681 No.	Base Color	First Stripe	Second Stripe	Third Stripe
1*	0	BLK			
2*	1	BRN			
3*	2	RED			
4*	3	ORN			
5*	4	YEL			
6*	5	GRN			
7*	6	BLU			
8*	7	VIO			
9*	8	GRY			
10*	9	WHT			
11	90	WHT	BLK		
12	91	WHT	BRN		
13	92	WHT	RED		
14	93	WHT	ORN		
15	94	WHT	YEL		
16	95	WHT	GRN		
17	96	WHT	BLU		
18	97	WHT	VIO		
19	98	WHT	GRY		
20	901	WHT	BLK	BRN	
21	902	WHT	BLK	RED	
22	903	WHT	BLK	ORN	
23	904	WHT	BLK	YEL	
24	905	WHT	BLK	GRN	
25	906	WHT	BLK	BLU	
26	907	WHT	BLK	VIO	
27	908	WHT	BLK	GRY	
28	912	WHT	BRN	RED	
29	913	WHT	BRN	ORN	
30	914	WHT	BRN	YEL	
31	915	WHT	BRN	GRN	
32	916	WHT	BRN	BLU	
33	917	WHT	BRN	VIO	
34	918	WHT	BRN	GRY	
35	923	WHT	RED	ORN	
36	924	WHT	RED	YEL	
37	925	WHT	RED	GRN	
38	926	WHT	RED	BLU	
39	927	WHT	RED	VIO	
40	928	WHT	RED	GRY	
41	934	WHT	ORN	YEL	
42	935	WHT	ORN	GRN	
43	936	WHT	ORN	BLU	
44	937	WHT	ORN	VIO	
45	938	WHT	ORN	GRY	
46	945	WHT	YEL	GRN	
47	946	WHT	YEL	BLU	
48	947	WHT	YEL	VIO	
49	948	WHT	YEL	GRY	
50	956	WHT	GRN	BLU	

PIN No.	MIL-STD-681 No.	Base Color	First Stripe	Second Stripe	Third Stripe
51	957	WHT	GRN	VIO	
52	958	WHT	GRN	GRY	
53	967	WHT	BLU	VIO	
54	968	WHT	BLU	GRY	
55	978	WHT	VIO	GRY	
56	9012	WHT	BLK	BRN	RED
57	9013	WHT	BLK	BRN	ORN
58	9014	WHT	BLK	BRN	YEL
59	9015	WHT	BLK	BRN	GRN
60	9016	WHT	BLK	BRN	BLU
61	9017	WHT	BLK	BRN	VIO
62	9018	WHT	BLK	BRN	GRY
63	9023	WHT	BLK	RED	ORN
64	9024	WHT	BLK	RED	YEL
65	9025	WHT	BLK	RED	GRN
66	9026	WHT	BLK	RED	BLU
67	9027	WHT	BLK	RED	VIO
68	9028	WHT	BLK	RED	GRY
69	9034	WHT	BLK	ORN	YEL
70	9035	WHT	BLK	ORN	GRN
71	9036	WHT	BLK	ORN	BLU
72	9037	WHT	BLK	ORN	VIO
73	9038	WHT	BLK	ORN	GRY
74	9045	WHT	BLK	YEL	GRN
75	9046	WHT	BLK	YEL	BLU
76	9047	WHT	BLK	YEL	VIO
77	9048	WHT	BLK	YEL	GRY
78	9056	WHT	BLK	GRN	BLU
79	9057	WHT	BLK	GRN	VIO
80	9058	WHT	BLK	GRN	GRY
81	9067	WHT	BLK	BLU	VIO
82	9068	WHT	BLK	BLU	GRY
83	9078	WHT	BLK	VIO	GRY
84	9123	WHT	BRN	RED	ORN
85	9124	WHT	BRN	RED	YEL
86	9125	WHT	BRN	RED	GRN
87	9126	WHT	BRN	RED	BLU
88	9127	WHT	BRN	RED	VIO
89	9128	WHT	BRN	RED	GRY
90	9134	WHT	BRN	ORN	YEL
91	9135	WHT	BRN	ORN	GRN
92	9136	WHT	BRN	ORN	BLU
93	9137	WHT	BRN	ORN	VIO
94	9138	WHT	BRN	ORN	GRY
95	9145	WHT	BRN	YEL	GRN
96	9146	WHT	BRN	YEL	BLU
97	9147	WHT	BRN	YEL	VIO
98	9148	WHT	BRN	YEL	GRY
99	9156	WHT	BRN	GRN	BLU
100	9157	WHT	BRN	GRN	VIO

*10 colors repeat is the standard wire color code for MIL-DTL-83513 connectors.

Micro-D Accessories

Dust Caps

Arrangement	Anti-Static (Pink)		Conductive (Black)	
	Plug	Receptacle	Plug	Receptacle
9	025-9524-000	025-9525-000	025-9524-003	025-9525-003
15	025-9526-000	025-9527-000	025-9526-003	025-9527-003
21	025-9528-000	025-9529-000	025-9528-003	025-9529-003
25	025-9530-000	025-9531-000	025-9530-004	025-9531-003
31	025-9532-000	025-9533-000	025-9532-003	025-9533-003
37	025-9534-000	025-9535-000	025-9534-003	025-9535-003
51	025-0936-000	025-9537-000	025-9536-004	025-9537-003
100	025-9553-000	025-9554-000	025-9553-003	025-9554-002

About ITT Cannon

ITT is a diversified leading manufacturer of highly engineered critical components and customized technology solutions for the energy, transportation and industrial markets. Building on its heritage of innovation, ITT partners with its customers to deliver enduring solutions to the key industries that underpin our modern way of life. Founded in 1920, ITT is headquartered in White Plains, N.Y., with employees in more than 35 countries and sales in a total of approximately 125 countries. For more information visit itt.com

ITT's Cannon brand offers a product portfolio that remains one of the most extensive in the industry. Continuous investment in technology, research and investment have enabled us to provide new, innovative solutions to markets including:

- Commercial Aerospace
- Military & Defense
- Industrial
- Transportation
- Medical

When you specify an ITT Cannon interconnect solution, you can rely on products designed, developed and manufactured to the highest quality and reliability standards. This tradition of excellence is based on ITT Cannon's corporate culture of operating its businesses under the principles of Six Sigma. At ITT, Six Sigma is not just a quality philosophy but a complete corporate culture that drives the entire business. Our Value Based Management and Value-Based Product Development systems are two cornerstones that allow for the development of both leadership and product engineering principles.

Six Sigma Manufacturing

ITT Cannon operates manufacturing facilities in the United States, Germany, Italy, Mexico, China and Japan, all of which have particular product area strengths that allow ITT Cannon to offer a truly global presence to our customers. Our facilities are world class and accommodate full vertical integration, utilizing the latest manufacturing technologies including automated and robotic machining centers, Super Market manufacturing cells, Kanban pull systems, and automated electrical, mechanical, and optical test and inspection equipment. The combination of our manufacturing strength and our advanced manufacturing facilities allows ITT Cannon to offer products at market driven prices. Our capabilities, especially in robotics, computerized precision tooling, Kaizen Project Management, Six Sigma tools and testing give ITT the most optimized global manufacturing footprint in the interconnect industry.

The Custom Difference

As an industry leader in harsh environment interconnect applications, ITT Cannon's world class engineering teams work directly with our customers to design and develop cost-effective solutions for their applications. In many cases we may modify one of our standard designs to ensure a highly reliable solution where timing is critical. When custom connectors are required, we collaborate with clients and partners with a goal to design the most reliable, cost-effective solution possible. Our engineering and product management teams provide a thorough analysis of proposed solutions, ensuring our customers receive the right solution for their program and application needs.

RoHS Compliance Information

ITT Cannon has implemented a strict parts control plan for all ITT Cannon electronics plants worldwide that allows the Cannon product portfolio to meet the requirements of the European Union Directive 2002/95/EC better known as the Reduction of Hazardous Substances initiative. As appropriate, specific Cannon products may be ordered with an R prefix number which insures our customers will receive RoHS compliant parts for their commercial electronics applications and equipment. Since most RoHS hazardous substances center around specific metal plating and lead solder coatings, ITT Cannon's products for RoHS compliance are available in the following plating finishes: electroless nickel, stainless steel, anodize over aluminum and gold plating. It should be noted that gold plating would be recommended as the replacement for tin-lead solder when ordering board mount connectors.

RoHS COMPLIANT PART NUMBERS

Product Safety Information

This note must be read in conjunction with the product data sheet/catalog. failure to observe the advice in this information sheet and the operating conditions specified in the product data sheet/ catalog could result in hazardous situations.

1. MATERIAL CONTENT AND PHYSICAL FORM

(a) Electrical connectors do not usually contain hazardous materials. They contain conducting and non-conducting materials and can be divided into two groups:
Printed circuit types and low cost audio types which employ all plastic insulators and casings.

(b) Rugged, Fire Barrier and High Reliability types with metal casings and either natural rubber, synthetic rubber, plastic or glass insulating materials. Contact materials vary with type of connector and also application and are usually manufactured from either: Copper, copper alloys, nickel, alumel, chromel or steel. In special applications, other alloys may be specified.

2. FIRE CHARACTERISTICS AND ELECTRIC SHOCK HAZARD

There is no fire hazard when the connector is correctly wired and used within the specified parameters.
Incorrect wiring or assembly of the connector or careless use of metal tools or conductive fluids, or transit damage to any of the component parts may cause electric shock or burns. Live circuits must not be broken by separating mated connectors as this may cause arcing, ionization and burning. Heat dissipation is greater at maximum resistance in a circuit. Hot spots may occur when resistance is raised locally by damage, e.g. cracked or deformed contacts, broken strands of wire. Local over- heating may also result from the use of the incorrect application tools or from poor quality soldering or slack screw terminals. Overheating may occur if the ratings in the product Data Sheet/Catalog are exceeded and can cause breakdown of insulation and hence electric shock. If heating is allowed to continue it intensifies by further increasing the local resistance through loss of temper of spring contacts, formation of oxide film on contacts and wires and leakage currents through carbonization of insulation and tracking paths. Fire can then result in the presence of combustible materials and this may release noxious fumes. Overheating may not be visually apparent. Burns may result from touching overheated components.

3. HANDLING

Care must be taken to avoid damage to any component parts of electrical connectors during installation and use. Although there are normally no sharp edges, care must be taken when handling certain components to avoid injury to fingers. Electrical connectors may be damaged in transit to the customers, and damage may result in creation of hazards. Products should therefore be examined prior to installation/use and rejected if found to be damaged.

4. DISPOSAL

Incineration of certain materials may release noxious or even toxic fumes.

5. APPLICATION

Connectors with exposed contacts should not be selected for use on the current supply side of an electrical circuit, because an electric shock could result from touching exposed contacts on an unmated connector. Voltages in excess of 30 V ac or 42.5 V dc are potentially hazardous and care should be taken to ensure that such voltages cannot be transmitted in any way to exposed metal parts of the connector body. The connector and wiring should be checked, before making live, to have no damage to metal parts or insulators, no solder blobs, loose strands, conducting lubricants, swarf or any other undesired conducting particles. Circuit resistance and continuity check should be made to make certain that there are no high resistance joints or spurious conducting paths. Always use the correct application tools as specified in the Data Sheet/Catalog. Do not permit untrained personnel to wire, assemble or tamper with connectors. For operation voltage please see appropriate national regulations.

IMPORTANT GENERAL INFORMATION

(i) Air and creepage paths/operating voltage. The admissible operating voltages depend on the individual applications and the valid national and other applicable safe- ty regulations.
For this reason the air and creepage path data are only reference values. Observe reduction of air and creepage paths due to PC board and/or harnessing.

(ii) Temperature. All information given are temperature limits.
The operation temperature depends on the individual application.

(iii) Other important information. Cannon continuously endeavors to improve their products. Therefore, Cannon products may deviate from the description, technical data and shape as shown in this catalog and data sheets.

ITT Cannon is a business unit of ITT Cannon Inc., which manufactures the highest quality products available in the marketplace; however these products are intended to be used in accordance with the specifications in this publication. Any use or application that deviates from the stated operating specifications is not recommended and may be unsafe. No information and data contained in this publication shall be construed to create any liability on the part of Cannon. Any new issue of this publication shall automatically invalidate and supersede any and all previous issues

All data subject to change without notice.

We connect when it matters most

Meet some of Cannon's most popular, reliable and proven interconnect solutions

KPT Series I Miniature Circular Connector

Cannon's KPT Series I Mini-Circular is a robust, general-purpose interconnect used for a wide range of markets and applications including Ground Vehicles, Industrial Equipment, IFE/C and Military Aviation. It has a positive three-point bayonet coupling, five-key way polarization and high insert arrangement contact density. These rugged connectors are also available in a variety of plating options.



D-Subminiature Connectors

Originally designed for aircraft radio systems, Cannon's D-Subminiature Connector became the first multi-purpose interconnect solution of its kind, ideal for multiple markets and applications. From rocket launchers and satellite systems, to rugged military transports and commercial avionics, the D-Subminiature's versatility has made this Cannon invention the most widely used connector in the world.



Quadrax

Our family of innovative Quadrax contacts is based on the ARINC 600 physical interface, with a highly engineered design to facilitate deployment of Ethernet LAN's in Land, Sea or Air installations using ARINC 600, ARINC 404 or 38999-style connectors. The Quadrax contact enables high-speed data transfer rates up to 2.5 Gbs and features rear release crimp pin and socket Quadrax Contacts, as well as front release PC pin Quadrax contacts. It is available in a variety of 38999-style layout arrangement in the following shell styles: wall mount receptacle, box mount receptacle and jam nut receptacle and straight plug.

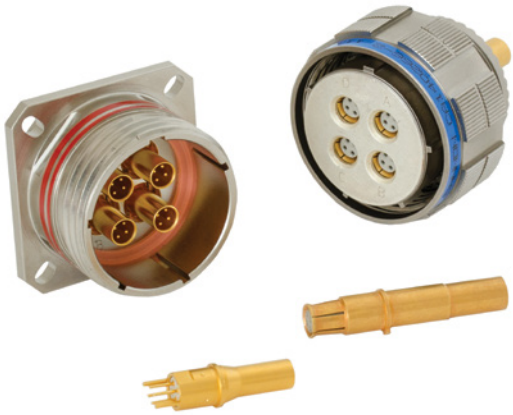

Dimensions shown in mm
Specifications and dimensions subject to change

cannon

Amazing things happen when great things connect



Connect with your ITT Cannon representative today or visit us at www.ittcannon.com

Connect with the experts

We deliver high performance, harsh environment interconnect solutions that enable the transfer of data, signal and power in an increasingly connected world.

Why ITT

ITT Cannon is a focused, multi-industrial company that designs and manufactures highly engineered critical components and customized technology solutions. ITT Cannon is a leading global manufacturer of connector products serving international customers in the aerospace and defense, industrial and medical end markets. We design and engineer a variety of interconnect solutions that make it possible to transfer data, signal and power in an increasingly connected world.

Connect with your ITT Cannon representative today or visit www.ittcannon.com

CHINA—Shenzhen City
+86.755.2726.7888

FRANCE
+33.1.60.04.93.93

GERMANY—Weinstadt
+49.7151.699.0

HONG KONG
+852.2732.2720

INDIA—Bangalore
+91 22 67843000

ITALY—Lainate
+39.02938721

JAPAN—Kanagawa
+81.462.57.2010

MEXICO—Nogales
+52.631.311005

SINGAPORE
+65 66974205

UK—Basingstoke
+44.1256.347400

USA—Irvine, CA
+1.800.854.3028

The "ITT Cannon Engineered Blocks" symbol, "Engineered for life," "ITT Cannon" and "Cannon" are registered trademarks of ITT Cannon Inc.
Specification and other data are based on information available at the time of printing, and are subject to change without notice.

© 2019 ITT Cannon Inc.