Data Sheet | Item Number: 769-1604

Strain relief housing; for female and male connectors; 2 parts; Pin spacing 5 mm; 4-pole; gray

https://www.wago.com/769-1604



Color: gray

Similar to illustration

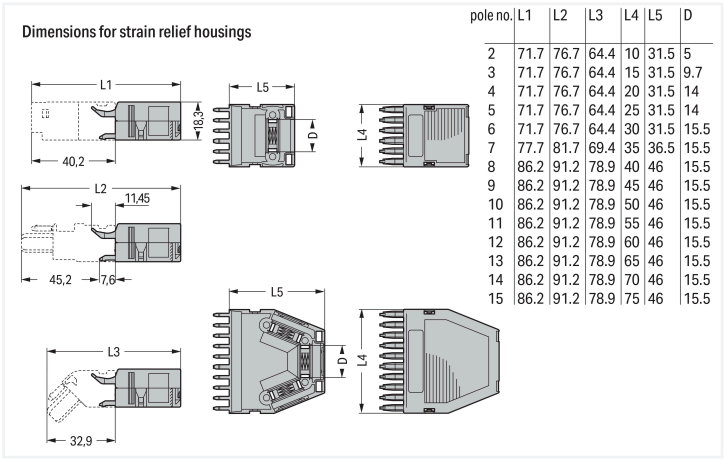

pole no.	L1	L2	L3	L4	L5	D
2	71.7	76.7	64.4	10	31.5	5
3	71.7	76.7	64.4	15	31.5	9.7
4	71.7	76.7	64.4	20	31.5	14
5	71.7	76.7	64.4	25	31.5	14
6	71.7	76.7	64.4	30	31.5	15.5
7	77.7	81.7	69.4	35	36.5	15.5
8	86.2	91.2	78.9	40	46	15.5
9	86.2	91.2	78.9	45	46	15.5
10	86.2	91.2	78.9	50	46	15.5
11	86.2	91.2	78.9	55	46	15.5
12	86.2	91.2	78.9	60	46	15.5
13	86.2	91.2	78.9	65	46	15.5
14	86.2	91.2	78.9	70	46	15.5
15	86.2	91.2	78.9	75	46	15.5

Dimensions in mm
Dimensions in mm

Connection Data

Connection 1

Number of poles	4

Physical data

Width	20 mm / 0.787 inches
Height	18.3 mm / 0.72 inches
Depth	31.5 mm / 1.24 inches

Material data

Note (material data)	Information on material specifications can be found here
Color	gray
Fire load	0.116 MJ
Weight	4.1 g

Commercial data

Product Group	18 (X-COM-System)
PU (SPU)	25 pcs
Packaging type	Box
Country of origin	DE
GTIN	4017332652896
Customs tariff number	39269097900

Product Classification

UNSPSC	39121421
eCl@ss 10.0	27-14-11-92
eCl@ss 9.0	27-14-11-92
ETIM 9.0	EC002848
ETIM 10.0	EC002848
ECCN	NO US CLASSIFICATION

Environmental Product Compliance

RoHS Compliance Status	Compliant,No Exemption

Downloads

Environmental Product Compliance

Compliance Search

Environmental Product Compliance 769-1604

Documentation

Bid Text

769-1604	19.02.2019	xml 2.64 KB	
769-1604	23.05.2017	docx 13.52 KB	

CAD/CAE-Data

CAD data

2D/3D Models 769-1604

CAE data

EPLAN Data Portal 769-1604

WSCAD Universe 769-1604

ZUKEN Portal 769-1604

Continued on next page

1 Compatible Products

1.1 Optional Accessories

1.1.1 Marking

1.1.1.1 Marker



Item No.: 209-501/000-006
WSB marking card; as card; not stretchable; plain; snap-on type; blue



Item No.: 209-501/000-007
WSB marking card; as card; not stretchable; plain; snap-on type; gray



Item No.: 209-501/000-023
WSB marking card; as card; not stretchable; plain; snap-on type; green



Item No.: 209-501/000-017
WSB marking card; as card; not stretchable; plain; snap-on type; light green



Item No.: 209-501/000-012
WSB marking card; as card; not stretchable; plain; snap-on type; orange



Item No.: 209-501/000-005
WSB marking card; as card; not stretchable; plain; snap-on type; red



Item No.: 209-501/000-024
WSB marking card; as card; not stretchable; plain; snap-on type; violet



Item No.: 209-501
WSB marking card; as card; not stretchable; plain; snap-on type; white



Item No.: 209-501/000-002
WSB marking card; as card; not stretchable; plain; snap-on type; yellow

Installation Notes

Installation

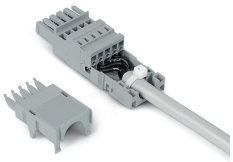

2- to 5-pole strain relief housings feature one cable outlet (rear side).
6- to 7-pole strain relief housings feature one cable outlet (rear side).
8- to 9-pole strain relief housings feature two cable outlets and one cover.
10- to 16-pole strain relief housings feature three cable outlets and two covers.

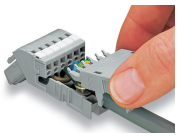

Snapping on a strain relief housing.



Snap-on type strain relief housing, consists of strain relief support and housing, 6-pole and 1-conductor female plugs, angled, 6-pole

Application

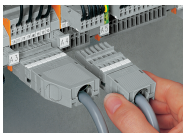

Application
Snap-on type strain relief housings for 769 Series