ITT

Interconnect Solutions

Combo D



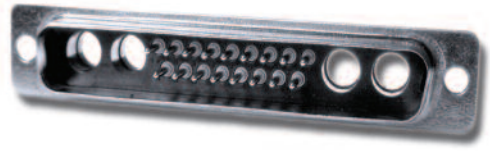



Engineered for life

Cannon, VEAM, BIW

A Historical Achievement of Technology Leadership

Defining and Championing Innovation

Showcasing a portfolio of creativity, ITT's "Engineered For Life" execution embraces products which have become ubiquitous in a broad collection of markets including: Military/Aerospace, Civil Aircraft, Industrial Instrumentation, Medical, Oil & Gas, Energy, Transportation, Telecom/Handset, Computer, Consumer, and Automotive.

ITT's rich interconnect history embraces contributions to both technological breakthroughs and social movements. With one of the industry's broadest product offerings, ITT's interconnect products have supported:

- Every Free World space mission, bringing the universe to our doorstep.
- Motion picture, radio, and television equipment, serving laughter and entertainment to millions.
- Commercial and military communications systems, linking the voices of the world.
- Computerized tools, reshaping the information highway.
- Aircraft, rapid transit, and automobiles, mobilizing our expanding society.
- Oil and natural gas production, powering the world's economies.
- Agricultural equipment, attacking the roots of world hunger.

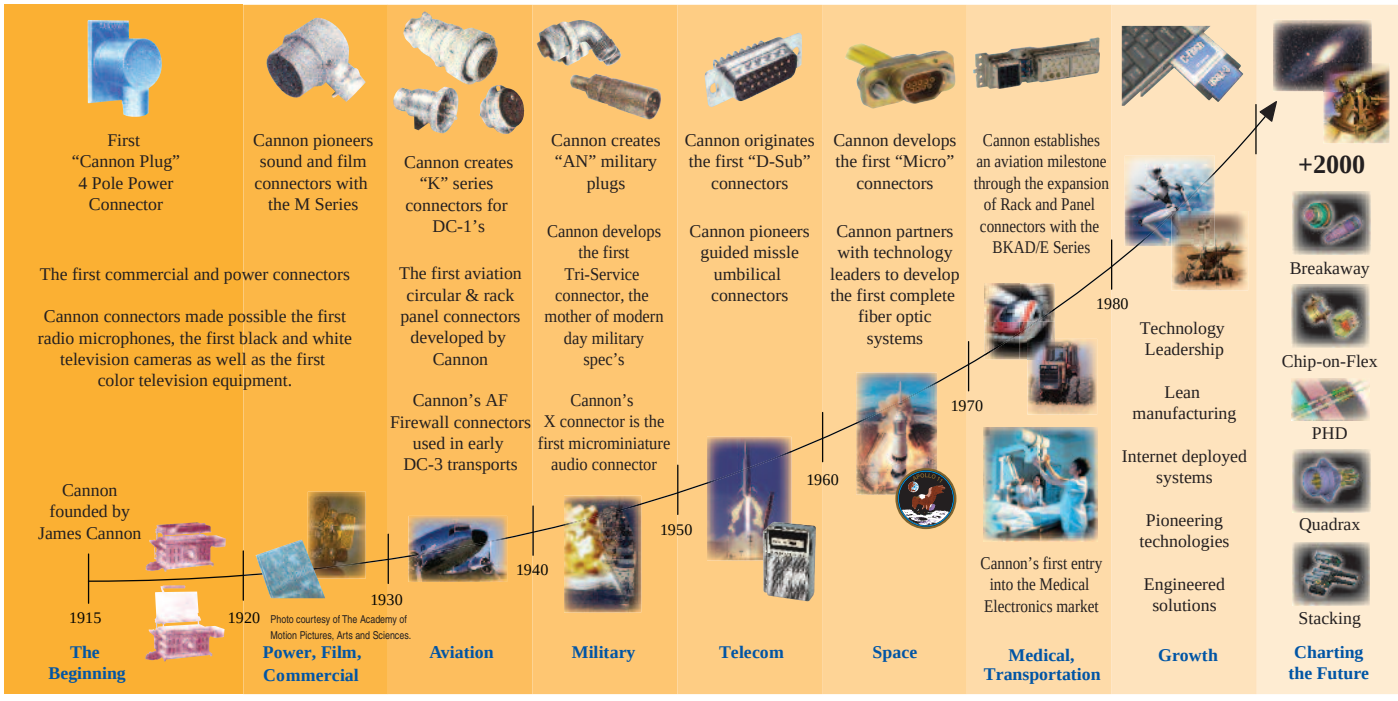

ITT Cannon

ITT is a diversified leading manufacturer of highly engineered critical components and customized technology solutions for the energy, transportation and industrial markets. ITT's Cannon brand offers a product portfolio that remains one of the most extensive in the industry. Continuous investment in technology, research and investment have enabled us to provide new, innovative solutions to multiple end markets including Commercial Aerospace, Military & Defense, Industrial and Medical.

When you specify a Cannon cnnector, you can rely on a product designed, developed and manufactured to the highest quality and reliability standards. This tradition of excellence is based on ITT's corporate culture of operating its businesses under the principles of Six Sigma. At ITT, Six Sigma is not just a quality philosophy but a complete corporate culture that drives the entire business. Our Value BasedManagement and Value Based Product Development systems are two cornerstones that allow for the development of both leadership and product engineering principles, ensuring the correct industry leading products are developed to the accepted market driven lead times. These principles have allowed ITT to become the market leader in all of our business portfolios.

Six Sigma Manufacturing

ITT operates manufacturing facilities in the United States, Germany, Italy, Mexico, China, Japan and the UK, all of which have particular product area strengths allowing ITT to offer a truly global footprint to our customers. Our facilities are world class and accommodate full vertical integration utilizing the latest manufacturing technologies including: automated and robotic machining centers, Super Market manufacturing cells, Kanban pull systems, and automated electrical, mechanical, and optical test and inspection equipment. The combination of our manufacturing strength and our advanced manufacturing facilities allows ITT to offer products at market driven prices. Our capabilities, especially in robotics, computer-ized precision tooling, Kaizen Project Management, Six Sigma tools, and testing, give ITT the most optimized global manufacturing footprint in the interconnect industry.

The Custom Difference

As the industry leader in harsh environment interconnect applications, ITT's world class engineering teams will work directly with our customers to design and develop cost effective solutions for their applications. In many cases we may modify one of our standard designs to ensure a highly reliable solution where timing is critical. Yet, in those cases where a complete custom inter-connect solution is required, ITT will work with our customer's Engineers to design an interconnect solution which will be cost effective yet highly reliable. As professional consultants, our Engineering teams will provide a thorough systems and mechanical analysis of any proposed solution. These analyses provide our customers with sophisticated electrical signal and mechanical characterizations to determine the best solution for their application.

RoHS Compliance Information

ITT has implemented a strict parts control plan for all ITT electronics plants worldwide that allows the Cannonproduct portfolio to meet the requirements of European Union Directive 2002/95/EC better know as the Reduction of Hazardous Substances initiative. As appropriate, specific Cannon products may be ordered with an R prefix number which insures our customers will receive RoHS compliant parts for their commercial electronics applications and equipment. Since most RoHS hazardous substances center around specific metal plating and lead solder coatings, ITT's products for RoHS compliance are avail-able in the following plating finishes: electroless nickel, stainless steel, Anodize over aluminum and Gold plating. It should be noted that gold plating would be recom-mended as the replacement for tin-lead solder when ordering board mount connectors.

RoHS COMPLIANT PART NUMBERS

Combo D* Introduction 5-8

Combo D* PCB Connectors with Coaxial Contacts

– 90°, PCB Plug (sizes DE-DC), with metal bracket..... 9
– 90°, PCB Plug (size DD), with metal bracket. 10
– 90°, PCB Receptacle (sizes DE-DC) with metal bracket..... 11
– 90°, PCB Receptacle (sizes DD) with metal bracket..... 12
– European 90°, PCB Plug (size DE-DC), with bracket. 13
– European 90°, PCB Receptacle (size DE-DC), with bracket. 14
– Straight PCB Plug (sizes DE-DD) 15
– Straight PCB Receptacle (sizes DE-DD) 16
– Straight, European solder pins (sizes DE-DD) 17
– Straight, European solder socket (sizes DE-DD) 18

Combo D* PCB Connectors with High Power Contacts 40 A

– 90°, PCB Plug (sizes DE-DC), with metal bracket..... 19
– 90°, PCB Plug (size DD), with metal bracket. 20
– 90°, PCB Receptacle (sizes DE-DC) with metal bracket..... 21
– 90°, PCB Receptacle (sizes DD) with metal bracket..... 22
– 90°, PCB Plug, European footprint (sizes DE-DC), with bracket. 23
– 90°, PCB Plug, European footprint (size DD), with bracket. 24
– 90°, PCB Receptacle, European footprint (sizes DE-DC), with bracket. 25
– 90°, PCB Receptacle, European footprint (size DD), with bracket. 26
– Straight PCB Plug (sizes DE-DC) 27
– Straight PCB Plug (size DD) 28
– Straight PCB Receptacle (sizes DE-DC) 29
– Straight PCB Receptacle (size DD) 30
– Straight, European solder pins (sizes DE-DC) 31
– Straight, European solder socket (sizes DE-DC) 32
– Plug, Pressfit Termination 33
– Receptacle, Pressfit Termination 34

Combo D* Connectors with empty Contact Cavities Size 8

– Plug, Solder cup (sizes DE – DC) 35
– Receptacle , Solder cup (Size DE-DC) 36
– Plug, Crimp connectors, without contacts (sizes DE – DD) 37
– Receptacle, Crimp connectors, without contacts (sizes DE – DD) 38
– Crimp contacts size 20 39-40
– Loose contacts size 8 41-53

Mounting Methods 59

Contact Arrangements 61-62

PCB Holes Pattern 66-98

Tooling 99

Product Safety Information 101

Combination D Subminiature connectors for the advantages of an industry standard shield I/O interconnect, with the flexibility of a customized special, designed for any application.

This connector system is ideal for applications that require optimization of space while improving overall shielding. Combo D® accomplishes this by combining multiple interconnect types into one fully shielded product, decreasing the number I/O interfaces and reducing the possibility of EMI/RFI leakage.

Applications
- Video Coaxial Transmission (75)
- RF and Telecom Transmission (50)
- Power interconnects (Up to 40 A)

Product Features
- Standard and European Footprints
- Pre-installed 75 /50 Coaxial or High Power contacts (One Part Number)
- Vertical Standoffs or 90° Brackets
- 90° or Straight PCB
- PC Boards up to 3,2 (.125) Thick
- PCB Variants Available with Boardlocks and/or Screw Locks (#4-40 or M3)
- Fiber Optics (PhD)
- High Voltage up to 2800 VAC

Specifications

Standard materials & finishes

Temperature Rating	–55°C to 125°C
Signal Contact Current Rating	7.5 A current capacity
Signal Contact Resistance	55 millivolt max. at 7.5 test current
Signal Contact Dielectric Withstanding Voltage	1250 VAC at Sea Level
Coaxial Current Rating	5 A
Coaxial Dielectric Withstanding Voltage	1000 VAC at Sea Level
Coaxial Impedance	75 or 50
Coaxial VSWR	Less than 1.40 + .03F for F up to 1GHz
Coaxial Insertion Loss	.2dB loss at 1 GHz
High Power current Rating	Up to 40 A
High Power Dielectric Withstanding Voltage	1000 VAC at Sea Level
High Voltage Current Rating	5 A
High Voltage Contact Dielectric Withstanding Voltage	2800 V at Sea Level

Materials and Finishes

Connector Assembly

Description	Material	Finish/Treatment
Shell	Carbon Steel	Tin-Nickel (Industrial), Chromate/Zinc (Military)*
Insulator	Black Polyester, UL 94V-0	None
Pin Contact	Copper Alloy	Gold over Nickel
Socket Contact	Copper Alloy	Gold over Nickel
Standoff	Steel	Trivalent Chromate over Zinc
Bracket	Steel	Tin
Rivnut	Steel	Tin
Boardlock	Copper Alloy	Tin

Coaxial/High Power/High Voltage Contact Assemblies

Contacts and outer shells	Copper Alloy	Gold over Nickel
Ring, Retaining	Copper Alloy	Nickel
Insulator (Coaxial only)	Teflon	None
Insulator (High Voltage only)	Thermoplastic	none

* Cadmium and Stainless Also Available

Materials and Finishes

Connector Assembly (Shells- Gold over Copper) (Modifier NMBK52)		
Shell	Brass per QQ-B-613	Gold 50 microinches min., thickness per MIL-G-45204, Type II, Class1 over copper per MIL-C-14550
Insulator	Polycyclohexle Dimethyl, Terephthalate or Polyphenylene, Sulfide co-polymer per 24308-Style white or black in color	None
Float Mount, Brackets, Captive Nuts Hardware	Brass	Gold
Coaxial/High Power/High Voltage Contact Assemblies		
Outer Coaxial Shell	Copper Alloy	Gold microinches min.thickness per MIL-G-45204, Type II, Class 1 over copper per MIL-C-14550
Center Coaxial Contact	Copper Alloy	Gold microinches min.thickness per MIL-G-45204, Type II, Class 1 over copper per MIL-C-14550
Insulator (Coaxial only)	Teflon	None
Insulator (Coaxial Only)	Teflon	None
Retaining Ring	Copper alloy	Gold
High Power Contact	Copper alloy	Gold microinches min.thickness per MIL-G-45204, Type II, Class 1 over copper per MIL-C-14550

Connector Assembly (Shells- Yellow Chromate over Cadmium) (Modifier "NMB")		
Shell	Brass per QQ-B-613	Yellow chromate over cadmium QQ-P-46,Type II, Class 2
Insulator	Polycyclohexle Dimethyl, Terephthalate or Polyphenylene, Sulfide co-polymer per 24308-Style, white or black in color	None
Contact	Copper Alloy	Gold 50 microinches min. thickness per MIL-G-45204, Type II, Class 1 over copper per MIL-C-14550
Float Mount, Brackets, Captive Nuts Hardware	Brass	Yellow chromate over cadmium QQ-P-416, Type II, Class 2

Dimensions shown in mm
Specifications and dimensions subject to change

For Crimp, Solder Cup and PCB Type Combo-D's

Typical Part Number: DBM C 13C3 S J A197

Product Family Designator

D*M = Solder Cup Industrial & Space/Non-Magnetic Version
D*MM = Military/Hi-Rel Solder Cupp version (50 micro-inch gold contact plating)
D*A = Crimp Version

****Hardware Modifier**

= 0.120" (3,05mm) Through Hole
C = 90° Metal Bracket, 4-40 Fastener, & Boardlock
D = 90° Metal Bracket, 4-40 Fastener and 4-40 Screwlock
E = 4-40 Clinchnut
G = 90° Metal Bracket, 4-40 Fastener, 4-40 Screwlock, Boardlock
H = .300" (7.6mm) Standoff, 4-40 Screwlock
J = 90° Metal Bracket, Fastener, M-3 Fastener, Boardlock
K = 0.162" (4,11mm) Through Hole
L = 90° Metal Bracket, M-3 Fastener, Boardlock
N = .300" (7.6mm) Standoff, 4-40 Screwlock, Boardlock
O = 90° Metal Bracket, Fastener, M-3 Screwlock
P = 90° Metal Bracket, 4-40 Fastener
Q = .300" (7.6mm) M-3 Standoff
S = 90° Metal Bracket, M-3 Fastener
T = .300" (7.6mm) M-3 Standoff
U = .300" (7.6mm) Standoff, M-3 Screwlock, Boardlock
V = .300" (7.6mm) 4-40 Standoff
W = .300" (7.6mm) Standoff, M-3 Screwlock
X = M-3 Clinchnut
Y = Dual Float Mount
Z = .300" (7.6mm) 4-40 Standoff, Boardlock
* = Shell Sizes are E, A, B, C, D
**= Hardware Modifier not allowed with Non-Magnetic, Low Outgassing Combo-D

Shell Modifier (Standard)

= Carbon steel, yellow chromate over zinc
A197 = Carbon steel, tin-nickel plating (receptacles only) (*RoHS)*
K87 = Carbon steel, tin-nickel plating (plugs only) (*RoHS*)
F225 = Stainless steel shells
NMBK52 = Space/Non-Magnetic version, gold plated
A101 = Carbon Steel, Cadmium plating

PC Tail Modifier (Standard)

= Solder cup (D*M/D*MM; Crimp, D*A)
J = 90° Std. PCB signal contact (.170" lg by .030")
N = Straight Std. PCB signal contact (.178 lg by .030)
V = 90° Euro PCB signal contact (.157" lg by .024)
Y = Straight Euro PCB signal contact (.178" lb by .024")

Gender

P = Male Plug, Pin
S = Female Receptacle, Socket

Layouts Combo-D

E- 5W1, 2W2, 2WK2
A- 3W3, 3WK3, 7W2, 11W1
B- 5W5, 9W4, 13W3, 17W2, 21W1
C- 8W8, 13W6, 17W5, 21WA4, 25W3, 27W2
D- 24W7, 36W4, 43W2, 47W1

Combo-D Size 8 Contact Designators:

W**= w/o Contacts (letters below denote with contacts)
C = 75 Ohm Coax Contacts Installed
X = 50 Ohm Coax Contacts Installed
H = High Power Installed (US Standard)
P = High Power Installed (European)
V = High Voltage Installed (Cable and PCB only)
R = Mini Hi Power 90° installed

** All cable side connectors use the "W" designation (without contacts) for ordering and have size and contacts ordered separately

Combo D European Versions

Typical Part Number: DBM E- 9C4 P-P00-1A5N- A191-K87-146

Product Family Designator
D*M = Combo D
= shell size E, A, B, C and D

Hardware Modifier
without code = 3,05mm" (.120 in.) Through Hole
E = 4-40 Clinchnut, solder cup, solder pin straight and 1A0N
N = 7.66 mm (.300 in.) with 4-40 post and pushfit, only OL4
Q = 7.66 mm (.300 in.) M3 with pushfit, only OL4
T = 7.66 mm (.300 in.) M3 standoff, only OL4
U = 7.66 mm (.300 in.) M3 post and pushfit, only OL4
V = 7.66 mm (.300 in.) 4-40 with pushfit, only OL4
X = M-3 Clinchnut, solder cup, solder pin straight and 1A0N
Y = Dual Float Mount, only solder cup
Z = .7.66 mm (.300 in.) 4-40 with pushfit, only OL4

Layout (Total # of contacts + # of Size 8 Cavities)
without code = Non Combo (9, 15, 25, 37, 50)
W = Empty size 8 Cavities
C = 75 Ohm Coax installed (straight or 90°)
X = 50 Ohm Coax installed (straight or 90°)
H = High power installed (straight)
P = High power installed (Euro, 90° only)
V = High voltage installed (available in straight PC only
G = Guide pin or guide socket installed

Gender
P = Male (plug, pin)
S = Female (receptacle, socket)

Code only applicable for Pressfit High power #8 contacts
P00 = Pessfit High power PCB dia 2,9 mm
P01 = Pessfit High power PCB dia 3,1 mm
P02 = Pessfit High power PCB dia 3,5 mm

PCB Mounting Method
146 = Pushfit for PCB hold diameter 3.0, 90° version only
162 = Pushfit for PCB hold diameter 3.2, 90° version only

Plating Modification
without code = Tellow chromate over zinc on shells
A197 = Tin on shells
K87 = Tin with dimples on shells (pin only)

Contact Finishes
without code = performance class 3 (50 mating cycles)
A191 = performance class 2 (200 mating cycles) Euro standard
A190 = performance class 1 (500 mating cycles)

Tail Modifier
[OL2] = No standard, please call factory
= Solder cup (size 8 contacts not loaded on these versions)
OL4 = Solder pin straight
1A0N = without mouting bracket, hole dia. 3.05 mm
1A5N = plastic bracket with bushing dia. 3.05 mm
1A6N = plastic bracket with post 4-40
1A7N = metal bracket and captive nut 4-40
1A8N = metal bracket with post 4-40
1A9N = metal bracket and captive nut M3
1ADN = plastic bracket with grounding bracket and bushing dia. 3.05 mm
1AFN = metal bracket with bushing dia. 3.05 mm
1AGN = plastic bracket with grounding bracket and post M3
1AHN = metal bracket with post M3
1AJN = plastic bracket with grounding bracket and post 4-40
1APN = plastic bracket with post M3
1ATN = plastic bracket and captive nut M3
1AUN = plastic bracket and captive nut 4-40
1AVN = plastic bracket with grounding bracket and captive nut M3
1AWN = plastic bracket with grounding bracket and captive nut 4-40
1AEN = 90° low profile metal bracket captive nut M3
1AAN = 90° low profile metal bracket captive nut 4-40
1ABN = 90° low profile metal bracket post M3
1ACN = low profile metal bracket post 4-40
1ALN = low profile metal bracket with buhing dia. 3.05 mm

Dimensions shown in mm
Specifications and dimensions subject to change

Coaxial 90° PCB Plug, sizes DE – DC, with metal bracket

		INDUSTRIAL – US 75 Ohm* coax inserted with US footprint metal bracket and UNC 4-40 captive nut		INDUSTRIAL – EU** 75 Ohm* coax inserted with EU footprint metal bracket and UNC 4-40 captive nut		MILITARY/HI-REL – US 50 Ohm* coax inserted with US footprint metal bracket and UNC 4-40 screw lock		NON-MAGNETIC-LOW OUTGASSING – US*** 50 Ohm* coax inserted with US footprint metal bracket and UNC 4-40 screw lock	
Shell size	**Layout**	**P/N without Boardlock**	**P/N with Boardlock**	**P/N without Boardlock**	**P/N with Boardlock**	**P/N without Boardlock**	**P/N with Boardlock**	**P/N with Cadmium Plating**	**P/N with Gold Plating**
DE	2W2	DEMP2C2P-JK87	DEMC2C2P-JK87	DEMP2C2P-VK87	DEMC2C2P-VK87	DEMMD2X2P-J	DEMMG2X2P-J	DEM2X2P-JNMB	DEM2X2P-JNMBK52
DE	2WK2	DEMP2CK2P-JK87	DEMC2CK2P-JK87	DEMP2CK2P-VK87	DEMC2CK2P-VK87	DEMMD2XK2P-J	DEMMG2XK2P-J	DEM2XK2P-JNMB	DEM2XK2P-JNMBK52
DE	5W1	DEMP5C1P-JK87	DEMC5C1P-JK87	DEMP5C1P-VK87	DEMC5C1P-VK87	DEMMD5X1P-J	DEMMG5X1P-J	DEM5X1P-JNMB	DEM5X1P-JNMBK52
DA	7W2	DAMP7C2P-JK87	DAMC7C2P-JK87	DAMP7C2P-VK87	DAMC7C2P-VK87	DAMMD7X2P-J	DAMMG7X2P-J	DAM7X2P-JNMB	DAM7X2P-JNMBK52
DA	11W1	DAMP11C1P-JK87	DAMC11C1P-JK87	DAMP11C1P-VK87	DAMC11C1P-VK87	DAMMD11X1P-J	DAMMG11X1P-J	DAM11X1P-JNMB	DAM11X1P-JNMBK52
DA	3W3	DAMP3C3P-JK87	DAMC3C3P-JK87	DAMP3C3P-VK87	DAMC3C3P-VK87	DAMMD3X3P-J	DAMMG3X3P-J	DAM3X3P-JNMB	DAM3X3P-JNMBK52
DA	3WK3	DAMP3CK3P-JK87	DAMC3CK3P-JK87	DAMP3CK3P-VK87	DAMC3CK3P-VK87	DAMMD3XK3P-J	DAMMG3XK3P-J	DAM3XK3P-JNMB	DAM3XK3P-JNMBK52
DB	5W5	DBMP5C5P-JK87	DBMC5C5P-JK87	DBMP5C5P-VK87	DBMC5C5P-VK87	DBMMD5X5P-J	DBMMG5X5P-J	DBM5X5P-JNMB	DBM5X5P-JNMBK52
DB	9W4	DBMP9C4P-JK87	DBMC9C4P-JK87	DBMP9C4P-VK87	DBMC9C4P-VK87	DBMMD9X4P-J	DBMMG9X4P-J	DBM9X4P-JNMB	DBM9X4P-JNMBK52
DB	13W3	DBMP13C3P-JK87	DBMC13C3P-JK87	DBMP13C3P-VK87	DBMC13C3P-VK87	DBMMD13X3P-J	DBMMG13X3P-J	DBM13X3P-JNMB	DBM13X3P-JNMBK52
DB	17W2	DBMP17C2P-JK87	DBMC17C2P-JK87	DBMP17C2P-VK87	DBMC17C2P-VK87	DBMMD17X2P-J	DBMMG17X2P-J	DBM17X2P-JNMB	DBM17X2P-JNMBK52
DB	21W1	DBMP21C1P-JK87	DBMC21C1P-JK87	DBMP21C1P-VK87	DBMC21C1P-VK87	DBMMD21X1P-J	DBMMG21X1P-J	DBM21X1P-JNMB	DBM21X1P-JNMBK52
DC	8W8	DCMP8C8P-JK87	DCMC8C8P-JK87	DCMP8C8P-VK87	DCMC8C8P-VK87	DCMMD8X8P-J	DCMMG8X8P-J	DCM8X8P-JNMB	DCM8X8P-JNMBK52
DC	13W6	DCMP13C6P-JK87	DCMC13C6P-JK87	DCMP13C6P-VK87	DCMC13C6P-VK87	DCMMD13X6P-J	DCMMG13X6P-J	DCM13X6P-JNMB	DCM13X6P-JNMBK52
DC	17W5	DCMP17C5P-JK87	DCMC17C5P-JK87	DCMP17C5P-VK87	DCMC17C5P-VK87	DCMMD17X5P-J	DCMMG17X5P-J	DCM17X5P-JNMB	DCM17X5P-JNMBK52
DC	21WA4	DCMP21CA4P-JK87	DCMC21CA4P-JK87	DCMP21CA4P-VK87	DCMC21CA4P-VK87	DCMMD21XA4P-J	DCMMG21XA4P-J	DCM21CX4P-JNMB	DCM21XA4P-JNMBK52
DC	25W3	DCMP25C3P-JK87	DCMC25C3P-JK87	DCMP25C3P-VK87	DCMC25C3P-VK87	DCMMD25X3P-J	DCMMG25X3P-J	DCM25X3P-JNMB	DCM25X3P-JNMBK52
DC	27W2	DCMP27C2P-JK87	DCMC27C2P-JK87	DCMP27C2P-VK87	DCMC27C2P-VK87	DCMMD27X2P-J	DCMMG27X2P-J	DCM27X2P-JNMB	DCM27X2P-JNMBK52

* For 50 ohm coaxial inserts replace C with X, e.g.:DCM13**C**6P-J becomes DCM13**X**6P-J. **For M-3 hardware, see part number designator, page 7.

*** Hardware Modifier not allowed with Non Magnetic/ Low Outgassing Combo-D- Contact factory for more information

Plug

- For contact cavity arrangements, see page 61.
- For pcb hole pattern, see pages 67-68.
- For mounting methods, see pages 59-60.

For 50 ohm coaxial version, see readers resource section page 63..

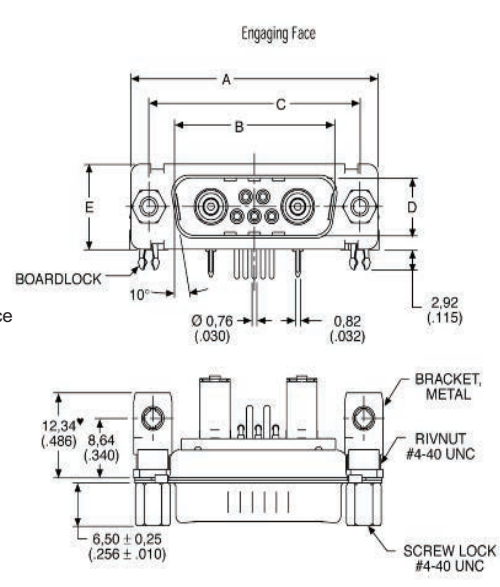

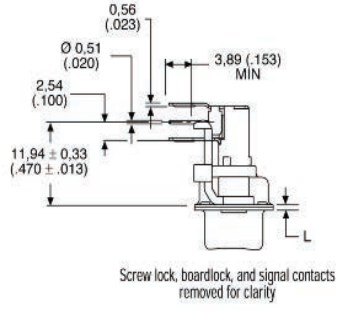

Screw lock, boardlock, and signal contacts removed for clarity

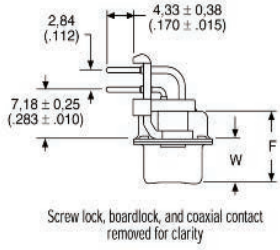

Screw lock, boardlock, and coaxial contact removed for clarity

Dimensions

Shell size	A ± 0,38 (.015)	B ± 0,13 (.005)	C ± 0,13 (.005)	D ± 0,13 (.005)	E ± 0,38 (.015)	F ± 0,25 (.010)	W ± 0,368 (.0145)	W ± 0,41 (.016)	L ± 0,25 (.010)
DE	30,81 (1.213)	16,92 (.665)	24,99 (.984)	8,36 (.329)	12,55 (.494)	10,72 (.422)	6,693 (.2635)	—	0,76 (.030)
DA	39,14 (1.541)	25,25 (.994)	33,32 (1.312)	8,36 (.329)	12,55 (.494)	10,72 (.422)	6,693 (.2635)	—	0,76 (.030)
DB	53,04 (2.088)	38,96 (1.534)	47,04 (1.852)	8,36 (.329)	12,55 (.494)	10,82 (.426)	—	6,84 (.269)	0,99 (.039)
DC	69,32 (2.729)	55,42 (2.182)	63,50 (2,500)	8,36 (.329)	12,55 (.494)	10,82 (.426)	—	6,84 (.269)	0,99 (.039)

ITT

Dimensions shown in mm
Specifications and dimensions subject to change

Coaxial 90° PCB Plug, size DD, with metal bracket

		INDUSTRIAL – US 75 Ohm* coax inserted with US footprint metal bracket and UNC 4-40 captive nut		INDUSTRIAL – EU** 75 Ohm* coax inserted with EU footprint metal bracket and UNC 4-40 captive nut		MILITARY/HI-REL – US 50 Ohm* coax inserted with US footprint metal bracket and UNC 4-40 screw lock		NON-MAGNETIC/LOW OUTGASSING-EU*** 50 Ohm* coax inserted with US footprint metal bracket and UNC 4-40 screw lock	
Shell size	**Layout**	**P/N without Boardlock**	**P/N with Boardlock**	**P/N without Boardlock**	**P/N with Boardlock**	**P/N without Boardlock**	**P/N with Boardlock**	**P/N with Cadmium Plating**	**P/N with Gold Plating**
DD	24W7	DDMP24C7P-JK87	DDMC24C7P-JK87	DDMP24C7P-VK87	DDMC24C7P-VK87	DDMMD24X7P-J	DDMMG24X7P-J	DDM24X7P-JNMB	DDM24X7P-JNMBK52
DD	36W4	DDMP36C4P-JK87	DDMC36C4P-JK87	DDMP36C4P-VK87	DDMC36C4P-VK87	DDMMD36X4P-J	DDMMG36X4P-J	DDM36X4P-JNMB	DDM36X4P-JNMBK52
DD	43W2	DDMP43C2P-JK87	DDMC43C2P-JK87	DDMP43C2P-VK87	DDMC43C2P-VK87	DDMMD43X2P-J	DDMMG43X2P-J	DDM43X2P-JNMB	DDM43X2P-JNMBK52
DD	47W1	DDMP47C1P-JK87	DDMC47C1P-JK87	DDMP47C1P-VK87	DDMC47C1P-VK87	DDMMD47X1P-J	DDMMG47X1P-J	DDM47X1P-JNMB	DDM47X1P-JNMBK52

* For 50 ohm coaxial inserts replace C with X, e.g.:DCM13**C**6P-J becomes DCM13**X**6P-J. **For M-3 hardware, see part number designator, page 7.

*** Hardware Modifier not allowed with Non Magnetic/ Low Outgassing Combo-D- Contact factory for more information

Plug



- For contact cavity arrangements, see page 61.
- For pcb hole pattern, see pages 67-68.
- For mounting methods, see pages 59-60.

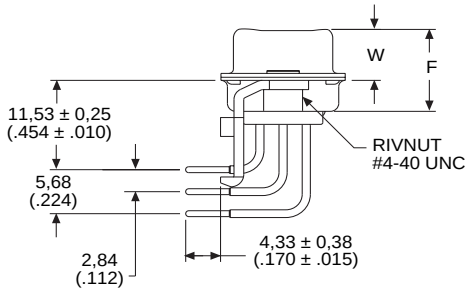

Screw lock, boardlock, and coaxial contact removed for clarity

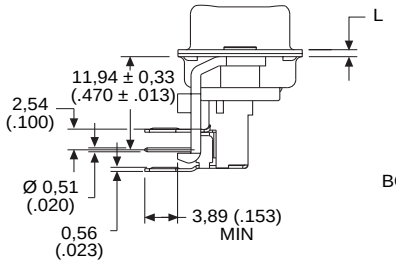

Screw lock, boardlock, and signal contacts removed for clarity

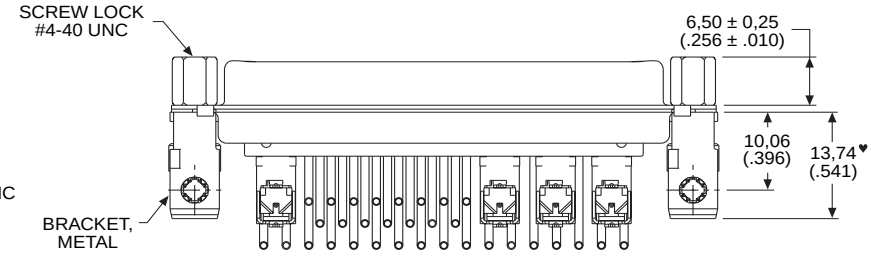

Engaging Face

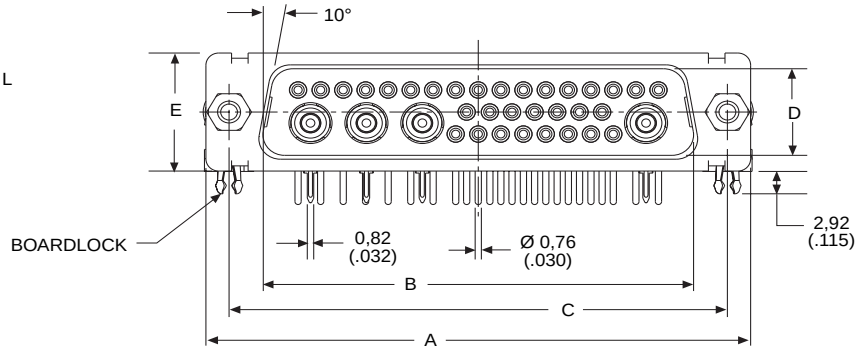

US version shown – for EU version, please contact factory.

Note: Dimension varies with alternate bracket configuration, see Reader's Resource page 64.

For 50 ohm coaxial version, see readers resource section, page 63.

Dimensions

Shell size	A ± 0,38 (.015)	B ± 0,13 (.005)	C ± 0,13 (.005)	D ± 0,13 (.005)	E ± 0,38 (.015)	F ± 0,25 (.010)	W ± 0,41 (.015)	L ± 0,25 (.010)
DD	66,93 (2.635)	52,81 (2.079)	61,11 (2,406)	11,07 (.436)	15,37 (.605)	10,82 (.426)	6,84 (.269)	0,99 (.039)

Dimensions shown in mm
Specifications and dimensions subject to change

Coaxial 90° PCB Receptacle, sizes DE – DC, with metal bracket

		INDUSTRIAL – US 75 Ohm* coax inserted with US Footprint metal bracket and UNC 4-40 captive nut		INDUSTRIAL – EU** 75 Ohm* coax inserted with EU Footprint metal bracket and UNC 4-40 captive nut		MILITARY/HI-REL – US 50 Ohm* coax inserted with US Footprint metal bracket and UNC 4-40 screw lock		NON-MAGNETIC/LOW OUTGASSING – US*** 50 Ohm* coax inserted with US Footprint metal bracket and UNC 4-40 screw lock	
Shell size	**Layout**	**P/N without Boardlock**	**P/N with Boardlock**	**P/N without Boardlock**	**P/N with Boardlock**	**P/N without Boardlock**	**P/N with Boardlock**	**P/N with Cadmium Plating**	**P/N with Gold Plating**
DE	2W2	DEMP2C2S-JA197	DEMC2C2S-JA197	DEMP2C2S-VA197	DEMC2C2S-VA197	DEMMP2X2S-J	DEMMC2X2S-J	DEM2X2S-JNMB	DEM2X2S-JNMBK52
DE	2WK2	DEMP2CK2S-JA197	DEMC2CK2S-JA197	DEMP2CK2S-VA197	DEMC2CK2S-VA197	DEMMP2XK2S-J	DEMMC2XK2S-J	DEM2XK2S-JNMB	DEM2XK2S-JNMBK52
DE	5W1	DEMP5C1S-JA197	DEMC5C1S-JA197	DEMP5C1S-VA197	DEMC5C1S-VA197	DEMMP5X1S-J	DEMMC5X1S-J	DEM5X1S-JNMB	DEM5X1S-JNMBK52
DA	7W2	DAMP7C2S-JA197	DAMC7C2S-JA197	DAMP7C2S-VA197	DAMC7C2S-VA197	DAMMP7X2S-J	DAMMC7X2S-J	DAM7X7S-JNMB	DAM7X2S-JNMBK52
DA	11W1	DAMP11C1S-JA197	DAMC11C1S-JA197	DAMP11C1S-VA197	DAMC11C1S-VA197	DAMMP11X1S-J	DAMMC11X1S-J	DAM11X1S-JNMB	DAM11X1S-JNMBK52
DA	3W3	DAMP3C3S-JA197	DAMC3C3S-JA197	DAMP3C3S-VA197	DAMC3C3S-VA197	DAMMP3X3S-J	DAMMC3X3S-J	DAM3X3S-JNMB	DAM3X3S-JNMBK52
DA	3WK3	DAMP3CK3S-JA197	DAMC3CK3S-JA197	DAMP3CK3S-VA197	DAMC3CK3S-VA197	DAMMP3XK3S-J	DAMMC3XK3S-J	DAM3XK3S-JNMB	DAM3XK3S-JNMBK52
DB	5W5	DBMP5C5S-JA197	DBMC5C5S-JA197	DBMP5C5S-VA197	DBMC5C5S-VA197	DBMMP5X5S-J	DBMMC5X5S-J	DBM5X5S-JNMB	DBM5X5S-JNMBK52
DB	9W4	DBMP9C4S-JA197	DBMC9C4S-JA197	DBMP9C4S-VA197	DBMC9C4S-VA197	DBMMP9X4S-J	DBMMC9X4S-J	DBM9X4S-JNMB	DBM9X4S-JNMBK52
DB	13W3	DBMP13C3S-JA197	DBMC13C3S-JA197	DBMP13C3S-VA197	DBMC13C3S-VA197	DBMMP13X3S-J	DBMMC13X3S-J	DBM13X3S-JNMB	DBM13X3S-JNMBK52
DB	17W2	DBMP17C2S-JA197	DBMC17C2S-JA197	DBMP17C2S-VA197	DBMC17C2S-VA197	DBMMP17X2S-J	DBMMC17X2S-J	DBM17X2S-JNMB	DBM17X2S-JNMBK52
DB	21W1	DBMP21C1S-JA197	DBMC21C1S-JA197	DBMP21C1S-VA197	DBMC21C1S-VA197	DBMMP21X1S-J	DBMMC21X1S-J	DBM21X1S-JNMB	DBM21X1S-JNMBK52
DC	8W8	DCMP8C8S-JA197	DCMC8C8S-JA197	DCMP8C8S-VA197	DCMC8C8S-VA197	DCMMP8X8S-J	DCMMC8X8S-J	DCM8X8S-JNMB	DCM8X8S-JNMBK52
DC	13W6	DCMP13C6S-JA197	DCMC13C6S-JA197	DCMP13C6S-VA197	DCMC13C6S-VA197	DCMMP13X6S-J	DCMMC13X6S-J	DCM13X6S-JNMB	DCM13X6S-JNMBK52
DC	17W5	DCMP17C5S-JA197	DCMC17C5S-JA197	DCMP17C5S-VA197	DCMC17C5S-VA197	DCMMP17X5S-J	DCMMC17X5S-J	DCM17X5S-JNMB	DCM17X5S-JNMBK52
DC	21WA4	DCMP21CA4S-JA197	DCMC21CA4S-JA197	DCMP21CA4S-VA197	DCMC21CA4S-VA197	DCMMP21XA4S-J	DCMMC21XA4S-J	DCM21XA4S-JNMB	DCM21XA4S-JNMBK52
DC	25W3	DCMP25C3S-JA197	DCMC25C3S-JA197	DCMP25C3S-VA197	DCMC25C3S-VA197	DCMMP25X3S-J	DCMMC25X3S-J	DCM25X3S-JNMB	DCM25X3S-JNMBK52
DC	27W2	DCMP27C2S-JA197	DCMC27C2S-JA197	DCMP27C2S-VA197	DCMC27C2S-VA197	DCMMP27X2S-J	DCMMC27X2S-J	DCM27X2S-JNMB	DCM27X2S-JNMBK52

* For 50 ohm coaxial inserts replace C with X, e.g.:DCM13**C**6S-J becomes DCM13**X**6S-J. **For M-3 and other hardware options, see part number designator, page 7.

*** Hardware Modifier not allowed with Non Magnetic/ Low Outgassing Combo-D- Contact factory for more information

Receptacle



US version shown – for EU version, please see page 14.
For 50 ohm coaxial version, see readers resource section, page 63.

- For contact cavity arrangements, see page 62.
- For pcb hole pattern, see pages 69-71.
- For mounting methods, see pages 59-60.

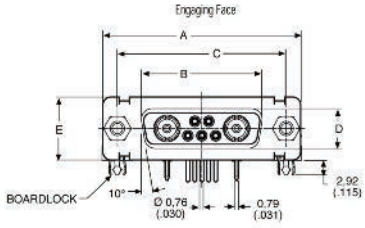

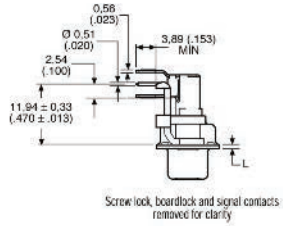

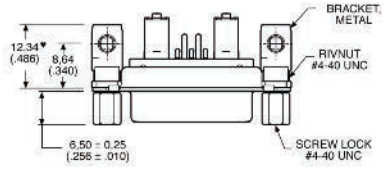

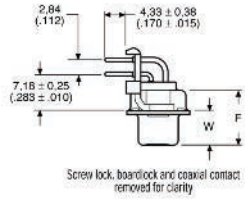

Dimensions

Shell size	A ± 0,38 (.015)	B ± 0,13 (.005)	C ± 0,13 (.005)	D ± 0,13 (.005)	E ± 0,38 (.015)	F ± 0,25 (.010)	W ± 0,38 (.015)	L ± 0,25 (.010)
DE	30,81 (1.213)	16,33 (.643)	24,99 (.984)	7,90 (.311)	12,55 (.494)	10,90 (.429)	6,94 (.273)	0,76 (.030)
DA	39,14 (1.541)	24,65 (.971)	33,32 (1.312)	7,90 (.311)	12,55 (.494)	10,90 (.429)	6,94 (.273)	0,76 (.030)
DB	53,04 (2.088)	38,38 (1.511)	47,04 (1.852)	7,90 (.311)	12,55 (.494)	10,90 (.429)	6,94 (.273)	0,76 (.030)
DC	69,32 (2.729)	54,84 (2.159)	63,50 (2,500)	7,90 (.311)	12,55 (.494)	10,90 (.429)	6,94 (.273)	0,76 (.030)

ITT

Dimensions shown in mm
Specifications and dimensions subject to change

www.ittcannon.com

Coaxial 90° PCB Receptacle, size DD, with metal bracket

		INDUSTRIAL – US 75 Ohm* coax inserted with US Footprint metal bracket and UNC 4-40 captive nut		INDUSTRIAL – EU** 75 Ohm* coax inserted with EU Footprint metal bracket and UNC 4-40 captive nut		MILITARY/HI-REL – US 75 Ohm* coax inserted with US Footprint metal bracket and UNC 4-40 screw lock		NON-MAGNETIC/LOW OUTGASSING – US*** 75 Ohm* coax inserted with US Footprint metal bracket and UNC 4-40 screw lock	
Shell size	**Layout**	**P/N without Boardlock**	**P/N with Boardlock**	**P/N without Boardlock**	**P/N with Boardlock**	**P/N without Boardlock**	**P/N with Boardlock**	**P/N with Cadmium Plating**	**P/N with Gold Plating**
DD	24W7	DDMP24C7S-JA197	DDMC24C7S-JA197	DDMP24C7S-VA197	DDMC24C7S-VA197	DDMMD24X7S-J	DDMMG24X2S-J	DDM24X7S-JNMB	DDM24X7S-JNMBK52
DD	36W4	DDMP36C4S-JA197	DDMC36C4S-JA197	DDMP36C4S-VA197	DDMC36C4S-VA197	DDMMD36X4S-J	DDMMG36X1S-J	DDM36X4S-JNMB	DDM36X4S-JNMBK52
DD	43W2	DDMP43C2S-JA197	DDMC43C2S-JA197	DDMP43C2S-VA197	DDMC43C2S-VA197	DDMMD43X2S-J	DDMMG43X2S-J	DDM43X7S-JNMB	DDM43X2S-JNMBK52
DD	47W1	DDMP47C1S-JA197	DDMC47C1S-JA197	DDMP47C1S-VA197	DDMC47C1S-VA197	DDMMD47X1S-J	DDMMG47X1S-J	DDM47X1S-JNMB	DDM47X1S-JNMBK52

* For 50 ohm coaxial inserts replace C with X, e.g.:DCM13**C**6 becomes DCM13**X**6S-JA197 **For M-3 and other hardware options, see part number designator, page 7.

*** Hardware Modifier not allowed with Non Magnetic/ Low Outgassing Combo-D- Contact factory for more information

Receptacle



- For contact cavity arrangements, see page 62.
- For pcb hole pattern, see pages 69-71.
- For mounting methods, see pages 59-60.

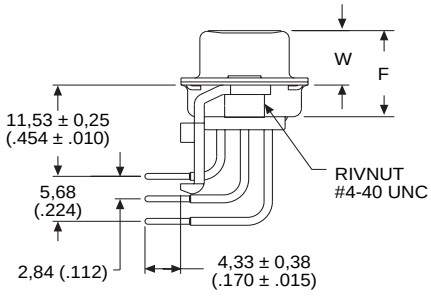

Screw lock, boardlock, and coaxial contacts removed for clarity

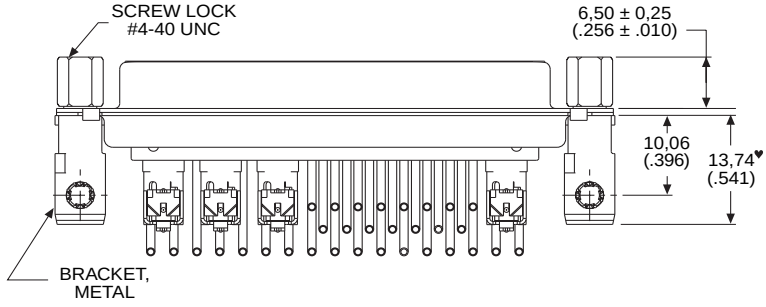

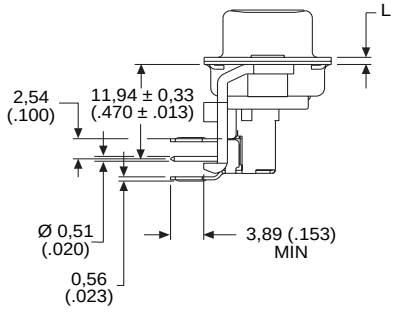

Screw lock, boardlock, and signal contacts removed for clarity

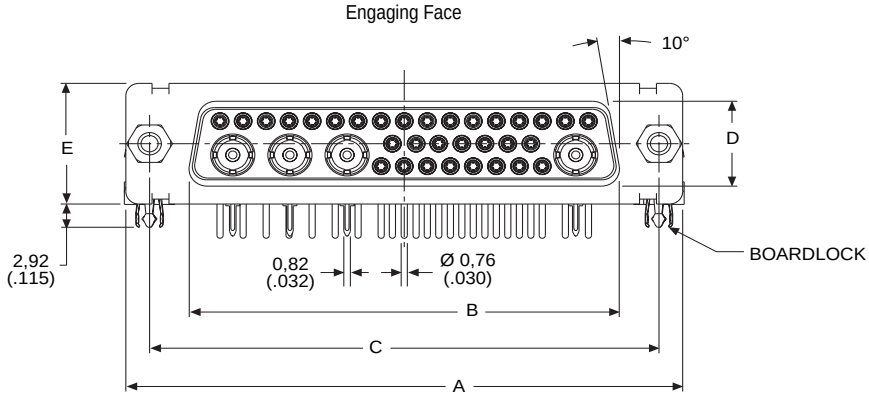

Note: Dimension varies with alternate bracket configuration, see Reader's Resource page 64.

US version shown – for EU version, please see contact factory.
For 50 ohm coaxial version, see readers resource section, page 63.

Dimensions

Shell size	A ± 0,38 (.015)	B ± 0,13 (.005)	C ± 0,13 (.005)	D ± 0,13 (.005)	E ± 0,38 (.015)	F ± 0,25 (.010)	W ± 0,38 (.015)	L ± 0,25 (.010)
DD	66,93 (2.635)	52,42 (2.064)	61,11 (2,406)	10,74 (.423)	15,37 (.605)	10,90 (.429)	6,94 (.273)	0,76 (.030)

Dimensions shown in mm
Specifications and dimensions subject to change

Coaxial 90° PCB Plug, sizes DE – DC, with bracket

Shell size	Layout	75 Ohm part numbers with bracket and captive nut M3 Plastic Bracket	Metal Bracket	75 Ohm part numbers with bracket with bushing dia. 3,05 Plastic Bracket	Metal Bracket	75 Ohm part number with bracket with post M3 Plastic Bracket	Metal Bracket
DE	2W2	DEM-2C2P-1ATN-A191-K87	DEM02C2P-1A9N-A191-K87	DEM-2C2P-1A5N-A191-K87	DEM-2C2P-1AFN-A191-K87	DEM-2C2P-APN-A191-K87	DEM-2C2P-1AHN-A191-K87
DE	2WK2	DEM-2CK2P-1ATN-A191-K87	DEM02CK2P-1A9N-A191-K87	DEM-2CK2P-1A5N-A191-K87	DEM-2CK2P-1AFN-A191-K87	DEM-2CK2P-APN-A191-K87	DEM-2CK2P-1AHN-A191-K87
DE	5W1	DEM-5C1P-1ATN-A191- K87	DEM-5C1P-1A9N-A191-K87	DEM-5C1P-1A5N-A191-K87	DEM-5C1P-1AFN-A191-K87	DEM-5C1P-APN-A191-K87	DEM-5C1P-1AHN-A191-K87
DA	7W2	DAM-7C2P-1ATN-A191-K87	DAM-7C2P-1A9N-A191-K87	DAM-7C2P-1A5N-A191-K87	DAM-7C2P-1AFN-A191-K87	DAM-7C2P-1APN-A191-K87	DAM-7C2P-1AHN-A191-K87
DA	11W1	DAM-11C1P-1ATN-A191-K87	DAM-11C1P-1A9N-A191-K87	DAM-11C1P-1A5N-A191-K87	DAM-11C1P-1AFN-A191-K87	DAM-11C1P-1APN-A191-K87	DAM-11C1P-1AHN-A191-K87
DA	3W3	DAM-3C3P-1ATN-A191-K87	DAM-3C3P-1A9N-A191-K87	DAM-3C3P-1A5N-A191-K87	DAM-3C3P-1AFN-A191-K87	DAM-3C3P-1APN-A191-K87	DAM-3C3P-1AHN-A191-K87
DA	3WK3	DAM-3CK3P-1ATN-A191-K87	DAM-3CK3P-1A9N-A191-K87	DAM-3CK3P-1A5N-A191-K87	DAM-3CK3P-1AFN-A191-K87	DAM-3CK3P-1APN-A191-K87	DAM-3CK3P-1AHN-A191-K87
DB	5W5	DBM-5C5P-1ATN-A191-K87	DBM-5C5P-1A9N-A191-K87	DBM-5C5P-1A5N-A191-K87	DBM-5C5P-1AFN-A191-K87	DBM-5C5P-1APN-A191-K87	DBM-5C5P-1AHN-A191-K87
DB	9W4	DBM-9C4P-1ATN-A191-K87	DBM-9C4P-1A9N-A191-K87	DBM-9C4P-1A5N-A191-K87	DBM-9C4P-1AFN-A191-K87	DBM-9C4P-1APN-A191-K87	DBM-9C4P-1AHN-A191-K87
DB	13W3	DBM-13C3P-1ATN-A191-K87	DBM-13C3P-1A9N-A191-K87	DBM-13C3P-1A5N-A191-K87	DBM-13C3P-1AFN-A191-K87	DBM-13C3P-1APN-A191-K87	DBM-13C3P-1AHN-A191-K87
DB	17W2	DBM-17C2P-1ATN-A191-K87	DBM-17C2P-1A9N-A191-K87	DBM-17C2P-1A5N-A191-K87	DBM-17C2P-1AFN-A191-K87	DBM-17C2P-1APN-A191-K87	DBM-17C2P-1AHN-A191-K87
DB	21W1	DBM-21C1P-1ATN-A191-K87	DBM-21C1P-1A9N-A191-K87	DBM-21C1P-1A5N-A191-K87	DBM-21C1P-1AFN-A191-K87	DBM-21C1P-1APN-A191-K87	DBM-21C1P-1AHN-A191-K87
DC	8W8	DCM-8C8P-1ATN-A191-K87	DCM-8C8P-1A9N-A191-K87	DCM-8C8P-1A5N-A191-K87	DCM-8C8P-1AFN-A191-K87	DCM-8C8P-1APN-A191-K87	DCM-8C8P-1AHN-A191-K87
DC	13W6	DCM-13C6P-1ATN-A191-K87	DCM-13C6P-1A9N-A191-K87	DCM-13C6P-1A5N-A191-K87	DCM-13C6P-1AFN-A191-K87	DCM-13C6P-1APN-A191-K87	DCM-13C6P-1AHN-A191-K87
DC	17W5	DCM-17C5P-1ATN-A191-K87	DCM-17C5P-1A9N-A191-K87	DCM-17C5P-1A5N-A191-K87	DCM-17C5P-1AFN-A191-K87	DCM-17C5P-1APN-A191-K87	DCM-17C5P-1AHN-A191-K87
DC	21WA4	DCM-21CA4P-1ATN-A191-K87	DCM-21CA4P-1A9N-A191-K87	DCM-21CA4P-1A5N-A191-K87	DCM-21CA4P-1AFN-A191-K87	DCM-21CA4P-1APN-A191-K87	DCM-21CA4P-1AHN-A191-K87
DC	25W3	DCM-25C3P-1ATN-A191-K87	DCM-25C3P-1A9N-A191-K87	DCM-25C3P-1A5N-A191-K87	DCM-25C3P-1AFN-A191-K87	DCM-25C3P-1APN-A191-K87	DCM-25C3P-1AHN-A191-K87
DC	27W2	DCM-27C2P-1ATN-A191-K87	DCM-27C2P-1A9N-A191-K87	DCM-27C2P-1A5N-A191-K87	DCM-27C2P-1AFN-A191-K87	DCM-27C2P-1APN-A191-K87	DCM-27C2P-1AHN-A191-K87

For performance class 1 replace A191 with A190.
For performance class 3 delete A191.

For 50 ohm coaxial replace C with X, Example:
DCM-13**C**6P-1AFN-A191-K87-146 becomes
DCM-13**X**6P-1AFN-A191-K87-146.

For pushfit add -146 modifier.
For pushfit 90° pcb hole diameter 3,2 replace 146 with 162.

Plug



- For contact cavity arrangements, see page 61.
- For pcb hole pattern, see pages 72-73.
- For mounting methods, see pages 59-60.

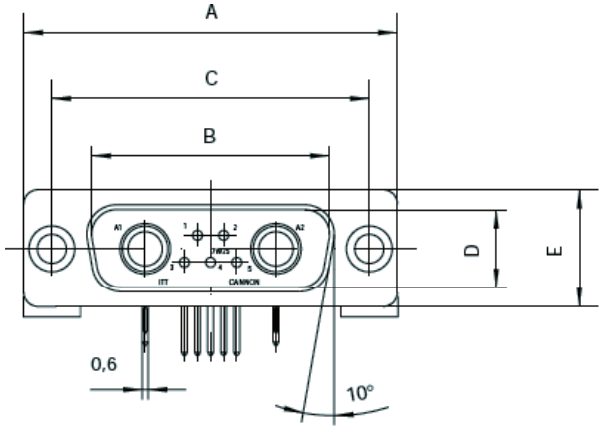

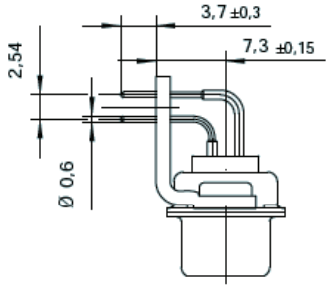

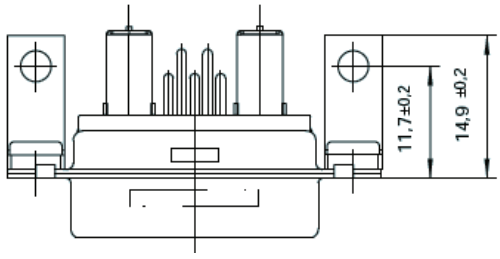

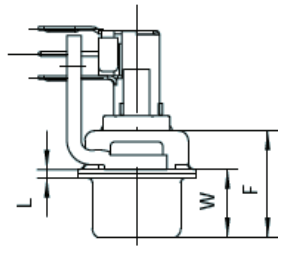

Dimensions

Shell size	A ± 0,38 (.015)	B ± 0,13 (.005)	C ± 0,13 (.005)	D ± 0,13 (.005)	E ± 0,38 (.015)	F ± 0,25 (.010)	W ± 0,25 (.010)	L ± 0,38 (.015)
DE	30,8 (1.213)	16,9 (.665)	25,0 (.984)	8,35 (.329)	12,55 (.494)	10,7 (.421)	6.7 (.264)	0,8 (.031)
DA	39,15 (1.541)	25,5 (.994)	33,33 (1.311)	8,35 (.329)	12,55 (.494)	10,7 (.421)	6.7 (.264)	0,8 (.031)
DB	53,05 (2.089)	38,95 (1.533)	47,05 (1.852)	8,35 (.329)	12,55 (.494)	10,8 (.425)	6.8 (.268)	0,9 (.035)
DC	69,3 (2.728)	55,4 (2.181)	63,5 (2.5)	8,35 (.329)	12,55 (.494)	10,8 (.425)	6.8 (.268)	0,9 (.035)

Coaxial 90° PCB Receptacle, sizes DE – DC, with bracket

Shell size	Layout	75 Ohm part numbers with bracket and captive nut M3 Plastic Bracket	Metal Bracket	75 Ohm part numbers with bracket with bushing dia. 3,05 Plastic Bracket	Metal Bracket	75 Ohm part number with bracket with post M3 Plastic Bracket	Metal Bracket
DE	2W2	DEM-2C2S-1ATN-A191-A197	DEM-2C2S-1A9N-A191-A197	DEM-2C2S-1A5N-A191-A197	DEM-2C2S-1AFN-A191-A197	DEM-2C2S-1APN-A191-A197	DEM-2C2S-1AHN-A191-A197
DE	2WK2	DEM-2CK2S-1ATN-A191-A197	DEM-2CK2S-1A9N-A191-A197	DEM-2CK2S-1A5N-A191-A197	DEM-2CK2S-1AFN-A191-A197	DEM-2CK2S-1APN-A191-A197	DEM-2CK2S-1AHN-A191-A197
DE	5W1	DEM-5C1S-1ATN-A191-A197	DEM-5C1S-1A9N-A191-A197	DEM-5C1S-1A5N-A191-A197	DEM-5C1S-1AFN-A191-A197	DEM-5C1S-1APN-A191-A197	DEM-5C1S-1AHN-A191-A197
DA	7W2	DAM-7C2S-1ATN-A191-A197	DAM-7C2S-1A9N-A191-A197	DAM-7C2S-1A5N-A191-A19	DAM-7C2S-1AFN-A191-A197	DAM-7C2S-1APN-A191-A197	DAM-7C2S-1AHN-A191-A197
DA	11W1	DAM-11C1S-1ATN-A191-A197	DAM-11C1S-1A9N-A191-A197	DAM-11C1S-1A5N-A191-A197	DAM-11C1S-1AFN-A191-A197	DAM-11C1S-1APN-A191-A197	DAM-11C1S-1AHN-A191-A197
DA	3W3	DAM-3C3S-1ATN-A191-A197	DAM-3C3S-1A9N-A191-A197	DAM-3C3S-1A5N-A191-A197	DAM-3C3S-1AFN-A191-A197	DAM-3C3S-1APN-A191-A197	DAM-3C3S-1AHN-A191-A197
DA	3WK3	DAM-3CK3S-1ATN-A191-A197	DAM-3CK3S-1A9N-A191-A19	DAM-3CK3S-1A5N-A191-A197	DAM-3CK3S-1AFN-A191-A197	DAM-3CK3S-1APN-A191-A197	DAM-3CK3S-1AHN-A191-A197
DB	5W5	DBM-5C5S-1ATN-A191-A197	DBM-5C5S-1A9N-A191-A197	DBM-5C5S-1A5N-A191-A197	DBM-5C5S-1AFN-A191-A197	DBM-5C5S-1APN-A191-A197	DBM-5C5S-1AHN-A191-A197
DB	9W4	DBM-9C4S-1ATN-A191-A197	DBM-9C4S-1A9N-A191-A197	DBM-9C4S-1A5N-A191-A197	DBM-9C4S-1AFN-A191-A197	DBM-9C4S-1APN-A191-A197	DBM-9C4S-1AHN-A191-A197
DB	13W3	DBM-13C3S-1ATN-A191-A197	DBM-13C3S-1A9N-A191-A197	DBM-13C3S-1A5N-A191-A197	DBM-13C3S-1AFN-A191-A197	DBM-13C3S-1APN-A191-A197	DBM-13C3S-1AHN-A191-A197
DB	17W2	DBM-17CS2-1ATN-A191-A197	DBM-17CS2-1A9N-A191-A197	DBM-17CS2-1A5N-A191-A197	DBM-17CS2-1AFN-A191-A197	DBM-17CS2-1APN-A191-A197	DBM-17CS2-1AHN-A191-A197
DB	21W1	DBM-21C1S-1ATN-A191-A197	DBM-21C1S-1A9N-A191-A197	DBM-21C1S-1A5N-A191-A197	DBM-21C1S-1AFN-A191-A197	DBM-21C1S-1APN-A191-A197	DBM-21C1S-1AHN-A191-A197
DC	8W8	DCM-8C8S-1ATN-A191-A197	DCM-8C8S-1A9N-A191-A197	DCM-8C8S-1A5N-A191-A197	DCM-8C8S-1AFN-A191-A197	DCM-8C8S-1APN-A191-A197	DCM-8C8S-1AHN-A191-A197
DC	13W6	DCM-13C6S-1ATN-A191-A197	DCM-13C6S-1A9N-A191-A197	DCM-13C6S-1A5N-A191-A197	DCM-13C6S-1AFN-A191-A197	DCM-13C6S-1APN-A191-A197	DCM-13C6S-1AHN-A191-A197
DC	17W5	DCM-17C5S-1ATN-A191-A197	DCM-17C5S-1A9N-A191-A197	DCM-17C5S-1A5N-A191-A197	DCM-17C5S-1AFN-A191-A197	DCM-17C5S-1APN-A191-A197	DCM-17C5S-1AHN-A191-A197
DC	21WA4	DCM-21CA4S-1ATN-A191-A197	DCM-21CA4S-1A9N-A191-A197	DCM-21CA4S-1A5N-A191-A197	DCM-21CA4S-1AFN-A191-A197	DCM-21CA4S-1APN-A191-A197	DCM-21CA4S-1AHN-A191-A197
DC	25W3	DCM-25C3S-1ATN-A191-A197	DCM-25C3S-1A9N-A191-A197	DCM-25C3S-1A5N-A191-A197	DCM-25C3S-1AFN-A191-A197	DCM-25C3S-1APN-A191-A197	DCM-25C3S-1AHN-A191-A197
DC	27W2	DCM-27C2S-1ATN-A191-A197	DCM-27C2S-1A9N-A191-A197	DCM-27C2S-1A5N-A191-A197	DCM-27C2S-1AFN-A191-A197	DCM-27C2S-1APN-A191-A197	DCM-27C2S-1AHN-A191-A197

For performance class 1 replace A191 with A190.
For performance class 3 delete A191.

For 50 ohm coaxial replace C with X, Example:
DCM-13**C**6S-1AFN-A191-A197-146 becomes
DCM-13**X**6S-1AFN-A191-A197-146.

For 3,0 mm pushfit add -146 modifier,
For 3,2 mm pushfit add -162 modifier.

Receptacle



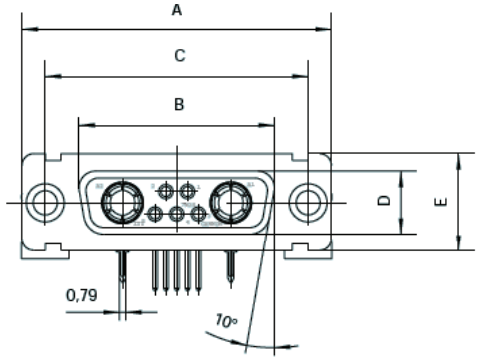

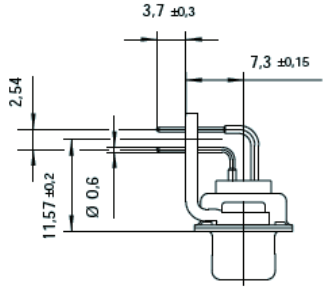

- For contact cavity arrangements, see page 62.
- For pcb hole pattern, see pages 74-75.
- For mounting methods, see pages 59-60.

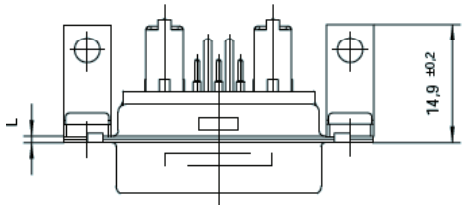

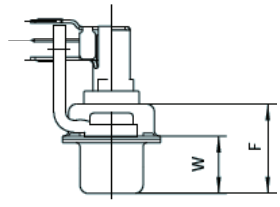

Dimensions

Shell size	A ± 0,38 (.015)	B ± 0,13 (.005)	C ± 0,13 (.005)	D ± 0,13 (.005)	E ± 0,38 (.015)	F ± 0,25 (.010)	W ± 0,25 (.010)	L ± 0,38 (.015)
DE	30,8 (1.213)	16,35 (.644)	25 (.984)	7,90 (.311)	12,55 (.494)	10,90 (.429)	6.95 (.274)	0,8 (.031)
DA	39,15 (1.541)	24,65 (.970)	33,33 (1.311)	7,90 (.311)	12,55 (.494)	10,90 (.429)	6.95 (.274)	0,8 (.031)
DB	53,05 (2.089)	38,4 (1.512)	47,05 (1.852)	7,90 (.311)	12,55 (.494)	10,90 (.429)	6.95 (.274)	0,8 (.031)
DC	69,3 (2.728)	54,85 (2.159)	63,5 (2.5)	7,90 (.311)	12,55 (.494)	10,90 (.429)	6.95 (.274)	0,8 (.031)

Dimensions shown in mm
Specifications and dimensions subject to change

Coaxial straight PCB Plug, sizes DE – DD

75 Ohm* coax inserted with straight contacts and standoff with UNC 4-40 thread

		75 OHM INDUSTRIAL		50 OHM MILITARY/HI-REL		NON-MAGNETIC/LOW OUTGASSING***	
Shell size	Layout	P/N without Boardlock	P/N with Boardlock	P/N without Boardlock	P/N with UNC Boardlock	P/N with Cadmium Plating	P/N with Gold Plating
DE	2W2	DEMV2C2P-NK87	DEMZ2C2P-NK87	DEMMV2X2P-N	DEMMZ2X2P-N	DEMV2X2P-NNMB	DEMZ2X2P-NNMBK52
DE	2WK2	DEMV2CK2P-NK87	DEMZ2CK2P-NK87	DEMMV2XK2P-N	DEMMZ2XK2P-N	DEMV2XK2P-NNMB	DEMZ2XK2P-NNMBK52
DE	5W1	DEMV5C1P-NK87	DEMZ5C1P-NK87	DEMMV5X1P-N	DEMMZ5X12P-N	DEMV5X1P-NNMB	DEMZ5X1P-NNMBK52
DA	7W2	DAMV7C2P-NK87	DAMZ7C2P-NK87	DAMMV7X2P-N	DAMMZ7X2P-N	DAMV7X2P-NNMB	DAMZ7X2P-NNMBK52
DA	7W2	DAMV7C2P-NAK87	DAMZ7C2P-NAK87	DAMMV7X2P-N	DAMMZ7X2P-N	DAMV7X2P-NNMB	DAMZ7X2P-NNMBK52
DA	11W1	DAMV11C1P-NK87	DAMZ11C1P-NK87	DAMMV11X1P-N	DAMMZ11X1P-N	DAMV11X1P-NNMB	DAMZ11X1P-NNMBK52
DA	3W3	DAMV3C3P-NK87	DAMZ3C3P-NK87	DAMMV3X3P-N	DAMMZ3X3P-N	DAMV3X3P-NNMB	DAMZ3X3P-NNMBK52
DA	3WK3	DAMV3CK3P-NK87	DAMZ3CK3P-NK87	DAMMV3XK3P-N	DAMMZ3XK3P-N	DAMV3XK3P-NNMB	DAMZ3XK3P-NNMBK52
DB	5W5	DBMV5C5P-NK87	DBMZ5C5P-NK87	DBMMV5X5P-N	DBMMZ5X5P-N	DBMV5X5P-NNMB	DBMZ5X5P-NNMBK52
DB	9W4	DBMV9C4P-NK87	DBMZ9C4P-NK87	DBMMV9X4P-N	DBMMZ9X4P-N	DBMV9X4P-NNMB	DBMZ9X4P-NNMBK52
DB	13W3	DBMV13C3P-NK87	DBMZ13C3P-NK87	DBMMV13X3P-N	DBMMZ13X3P-N	DBMV13X3P-NNMB	DBMZ13X3P-NNMBK52
DB	17W2	DBMV17C2P-NK87	DBMZ17C2P-NK87	DBMMV17X2P-N	DBMMZ17X2P-N	DBMV17X2P-NNMB	DBMZ17X2P-NNMBK52
DB	21W1	DBMV21C1P-NK87	DBMZ21C1P-NK87	DBMMV21X1P-N	DBMMZ21X1P-N	DBMV21X1P-NNMB	DBMZ21X1P-NNMBK52
DC	8W8	DCMV8C8P-NK87	DCMZ8C8P-NK87	DCMMV8X8P-N	DCMMZ8X8P-N	DCMV8X8P-NNMB	DCMZ8X8P-NNMBK52
DC	13W6	DCMV13C6P-NK87	DCMZ13C6P-NK87	DCMMV13X6P-N	DCMMZ13X6P-N	DCMV13X6P-NNMB	DCMZ13X6P-NNMBK52
DC	17W5	DCMV17C5P-NK87	DCMZ17C5P-NK87	DCMMV17X5P-N	DCMMZ17X5P-N	DCMV17X5P-NNMB	DCMZ17X5P-NNMBK52
DC	21WA4	DCMV21CA4P-NK87	DCMZ21CA4P-NK87	DCMMV21XA4P-N	DCMMZ21XA4P-N	DCMV21XA4P-NNMB	DCMZ21XA4P-NNMBK52
DC	25W3	DCMV25C3P-NK87	DCMZ25C3P-NK87	DCMMV25X3P-N	DCMMZ25X3P-N	DCMV25X3P-NNMB	DCMZ25X3P-NNMBK52
DC	27W2	DCMV27C2P-NK87	DCMZ27C2P-NK87	DCMMV27X2P-N	DCMMZ27X2P-N	DCMV27X2P-NNMB	DCMZ27X2P-NNMBK52
DD	24W7	DDMV24C7P-NK87	DDMZ24C7P-NK87	DDMMV24X7P-N	DDMMZ24X7P-N	DDMV24X7P-NNMB	DDMZ24X7P-NNMBK52
DD	36W4	DDMV36C4P-NK87	DDMZ36C4P-NK87	DDMMV36X4P-N	DDMMZ36X4P-N	DDMV36X4P-NNMB	DDMZ36X4P-NNMBK52
DD	43W2	DDMV43C2P-NK87	DDMZ43C2P-NK87	DDMMV43X2P-N	DDMMZ43X2P-N	DDMV43X2P -NNMB	DDMZ43X2P-NNMBK52
DD	47W1	DDMV47C1P-NK87	DDMZ47C1P-NK87	DDMMV47X1P-N	DDMMZ47X1P-N	DDMV47X1P-NNMB	DDMZ47X1P-NNMBK52

* For 50 ohm coaxial inserts replace C with X, e.g.:DDMZ43**C**2P-N becomes DDMZ43**X**2P-N. For M-3 and other hardware options, see part number designator, page 7.

*** Hardware Modifier not allowed with Non Magnetic/ Low Outgassing Combo-D- Contact factory for more information

Plug



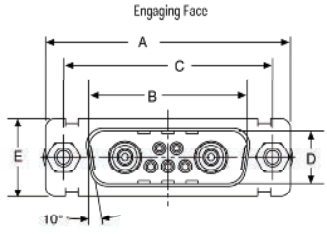

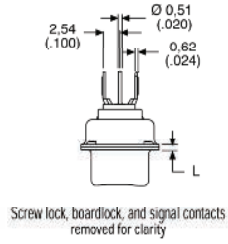

For contact cavity arrangements, see page 61.

- For pcb hole pattern, see pages 76-78.
- For mounting methods, see pages 59-60.

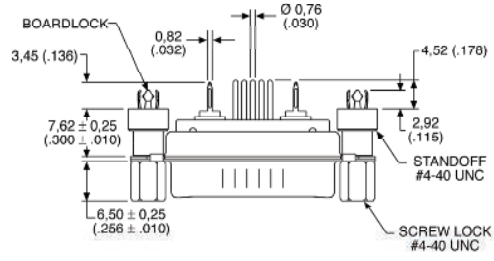

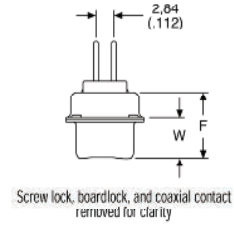

Dimensions

Shell size	A ± 0,38 (.015)	B ± 0,13 (.005)	C ± 0,13 (.005)	D ± 0,13 (.005)	E ± 0,38 (.015)	F ± 0,25 (.010)	W ± 0,368 (.0145)	W ± 0,41 (.016)	L ± 0,25 (.010)
DE	30,81 (1.213)	16,92 (.665)	24,99 (.984)	8,36 (.329)	12,55 (.494)	10,72 (.422)	6,693 (.2635)	—	0,76 (.030)
DA	39,14 (1.541)	25,25 (.994)	33,32 (1.312)	8,36 (.329)	12,55 (.494)	10,72 (.422)	6,693 (.2635)	—	0,76 (.030)
DB	53,04 (2.088)	38,96 (1.534)	47,04 (1.852)	8,36 (.329)	12,55 (.494)	10,82 (.426)	—	6,84 (.269)	0,99 (.039)
DC	69,32 (2.729)	55,42 (2.182)	63,50 (2,500)	8,36 (.329)	12,55 (.494)	10,82 (.426)	—	6,84 (.269)	0,99 (.039)
DD	66,93 (2.635)	52,81 (2.079)	61,11 (2,406)	11,07 (.436)	15,37 (.605)	10,82 (.426)	6,84 (.269)	0,99 (.039)	

Coaxial straight PCB Receptacle, sizes DE – DD

75 Ohm* coax inserted with straight contacts and standoff with UNC 4-40 thread

		75 OHM INDUSTRIAL		50 OHM MILITARY/HI-REL		50 OHM NON-MAGNETIC/LOW OUTGASSING***	
Shell size	Layout	P/N without Boardlock	P/N with Boardlock	P/N without Boardlock	P/N with UNC Boardlock	P/N with Cadmium Plating	P/N with Gold Plating
DE	2W2	DEMV2C2S-NA197	DEMZ2C2S-NA197	DEMMV2X2S-N	DEMMZ2X2S-N	DEM2X2S-NNMB	DEM2X2S-NNMBK52
DE	2WK2	DEMV2CK2S-NA197	DEMZ2CK2S-NA197	DEMMV2XK2S-N	DEMMZ2XK2S-N	DEM2XK2S-NNMB	DEM2XK2S-NNMBK52
DE	5W1	DEMV5C1S-NA197	DEMZ5C1S-NA197	DEMMV5X1S-N	DEMMZ5X1S-N	DEM5X1S-NNMB	DEM5X1S-NNMBK52
DA	7W2	DAMV7C2S-NA197	DAMZ7C2S-NA197	DAMMV7X2S-N	DAMMZ7X2S-N	DAM7X2S-NNMB	DAM7X2S-NNMBK52
DA	11W1	DAMV11C1S-NA197	DAMZ11C1S-NA197	DAMMV11X1S-N	DAMMZ11X1S-N	DAM11X1S-NNMB	DAM11X1S-NNMBK52
DA	3W3	DAMV3C3S-NA197	DAMZ3C3S-NA197	DAMMV3X3S-N	DAMMZ3X3S-N	DAM3X3S-NNMB	DAM3X3S-NNMBK52
DA	3WK3	DAMV3CK3S-NA197	DAMZ3CK3S-NA197	DAMMV3XK3S-N	DAMMZ3XK3S-N	DAM3XK3S-NNMB	DAM3XK3S-NNMBK52
DB	5W5	DBMV5C5S-NA197	DBMZ5C5S-NA197	DBMMV5X5S-N	DBMMZ5X5S-N	DBM5X5S-NNMB	DBM5X5S-NNMBK52
DB	9W4	DBMV9C4S-NA197	DBMZ9C4S-NA197	DBMMV9X4S-N	DBMMZ9X4S-N	DBM9X4S-NNMB	DBM9X4S-NNMBK52
DB	13W3	DBMV13C3S-NA197	DBMZ13C3S-NA197	DBMMV13X3S-N	DBMMZ13X3S-N	DBM13X3S-NNMB	DBM13X3S-NNMBK52
DB	17W2	DBMV17C2S-NA197	DBMZ17C2S-NA197	DBMMV17X2S-N	DBMMZ17X2S-N	DBM17X2S-NNMB	DBM17X2S-NNMBK52
DB	21W1	DBMV21C1S-NA197	DBMZ21C1S-NA197	DBMMV21X1S-N	DBMMZ21X1S-N	DBM21X1S-NNMB	DBM21X1S-NNMBK52
DC	8W8	DCMV8C8S-NA197	DCMZ8C8S-NA197	DCMMV8X8S-N	DCMMZ8X8S-N	DCM8X8S-NNMB	DCM8X8S-NNMBK52
DC	13W6	DCMV13C6S-NA197	DCMZ13C6S-NA197	DCMMV13X6S-N	DCMMZ13X6S-N	DCM13X6S-NNMB	DCM13X6S-NNMBK52
DC	17W5	DCMV17C5S-NA197	DCMZ17C5S-NA197	DCMMV17X5S-N	DCMMZ17X5S-N	DCM17X5S-NNMB	DCM17X5S-NNMBK52
DC	21WA4	DCMV21CA4S-NA197	DCMZ21CA4S-NA197	DCMMV21XA4S-N	DCMMZ21XA4S-N	DCM21XA4S-NNMB	DCM21XA4S-NNMBK52
DC	25W3	DCMV25C3S-NA197	DCMZ25C3S-NA197	DCMMV25X3S-N	DCMMZ25X3S-N	DCM25X3S-NNMB	DCM25X3S-NNMBK52
DC	27W2	DCMV27C2S-NA197	DCMZ27C2S-NA197	DCMMV27X2S-N	DCMMZ27X2S-N	DCM27X2S-NNMB	DCM27X2S-NNMBK52
DD	24W7	DDMV24C7S-NA197	DDMZ24C7S-NA197	DDMMV24X7S-N	DDMMZ24X7S-N	DDM24X7S-NNMB	DDM24X7S-NNMBK52
DD	36W4	DDMV36C4S-NA197	DDMZ36C4S-NA197	DDMMV36X4S-N	DDMMZ36X4S-N	DDM36X4S-NNMB	DDM36X4S-NNMBK52
DD	43W2	DDMV43C2S-NA197	DDMZ43C2S-NA197	DDMMV43X2S-N	DDMMZ43X2S-N	DDM43X2S-NNMB	DDM43X2S-NNMBK52
DD	47W1	DDMV47C1S-NA197	DDMZ47C1S-NA197	DDMMV47X1S-N	DDMMZ47X1S-N	DDM47X1S-NNMB	DDM47X1S-NNMBK52

* For 50 ohm coaxial inserts replace C with X, e.g.:DDMZ43**C**2S-N becomes DDMZ43**X**2S-J. **For M-3 and other hardware options, see part number designator, page 7.

*** Hardware Modifier not allowed with Non Magnetic/ Low Outgassing Combo-D- Contact factory for more information

Receptacle



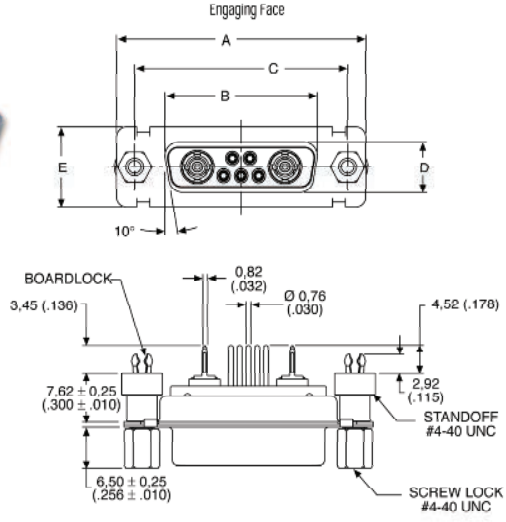

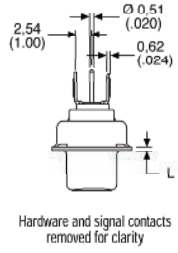

Hardware and signal contacts removed for clarity

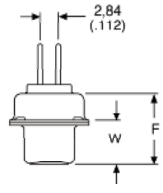

Hardware and coaxial contact removed for clarity

- For contact cavity arrangements, see page 62.
- For pcb hole pattern, see pages 79-81.
- For mounting methods, see pages 59-60.

Dimensions

Shell size	A ± 0,38 (.015)	B ± 0,13 (.005)	C ± 0,13 (.005)	D ± 0,13 (.005)	E ± 0,38 (.015)	F ± 0,25 (.010)	W ± 0,38 (.015)	L ± 0,25 (.010)
DE	30,81 (1.213)	16,33 (.643)	24,99 (.984)	7,90 (.311)	12,55 (.494)	10,90 (.429)	6,94 (.273)	0,76 (.030)
DA	39,14 (1.541)	24,65 (.971)	33,32 (1.312)	7,90 (.311)	12,55 (.494)	10,90 (.429)	6,94 (.273)	0,76 (.030)
DB	53,04 (2.088)	38,38 (1.511)	47,04 (1.852)	7,90 (.311)	12,55 (.494)	10,90 (.429)	6,94 (.273)	0,76 (.030)
DC	69,32 (2.729)	54,84 (2.159)	63,50 (2,500)	7,90 (.311)	12,55 (.494)	10,90 (.429)	6,94 (.273)	0,76 (.030)
DD	66,93 (2.635)	52,42 (2.064)	61,11 (2,406)	10,74 (.423)	15,37 (.605)	10,90 (.429)	6,94 (.273)	0,76 (.030)

Dimensions shown in mm
Specifications and dimensions subject to change

Coaxial straight- European solder pins, sizes DE – DD

75 Ohm* coax inserted with straight contacts

Shell	Layout	with standoff M3 with pushfit	with standoff M3 with pushfit	standoff, M3 post and	with M3 clinch nut	with through hole 3,05 mm
DE	2W2	DEMT-2C2P-OL4-A191-K87	DEMQ-2C2P-OL4-A191-K87	DEMU-2C2P-OL4-A191-K87	DEMX-2C2P-OL4-A191-K87	DEM-2C2P-OL4-A191-K87
DE	2WK2	DEMT-2CK2P-OL4-A191-K87	DEMQ-2CK2P-OL4-A191-K87	DEMU-2CK2P-OL4-A191-K87	DEMX-2CK2P-OL4-A191-K87	DEM-2CK2P-OL4-A191-K87
DE	5W1	DEMT-5C1P-OL4-A191-K87	DEMQ-5C1P-OL4-A191-K87	DEMU-5C1P-OL4-A191-K87	DEMX-5C1P-OL4-A191-K87	DEM-5C1P-OL4-A191-K87
DA	7W2	DAMT-7C2P-OL4-A191-K87	DAMQ-7C2P-OL4-A191-K87	DAMU-7C2P-OL4-A191-K87	DAMX-7C2P-OL4-A191-K87	DAM-7C2P-OL4-A191-K87
DA	11W1	DAMT-11C1P-OL4-A191-K87	DAMQ-11C1P-OL4-A191-K87	DAMU-11C1P-OL4-A191-K87	DAMX-11C1P-OL4-A191-K87	DAM-11C1P-OL4-A191-K87
DA	3W3	DAMT-3C3P-OL4-A191-K87	DAMQ-3C3P-OL4-A191-K87	DAMU-3C3P-OL4-A191-K87	DAMX-3C3P-OL4-A191-K87	DAM-3C3P-OL4-A191-K87
DA	3WK3	DAMT-3CK3P-OL4-A191-K87	DAMQ-3CK3P-OL4-A191-K87	DAMU-3CK3P-OL4-A191-K87	DAMX-3CK3P-OL4-A191-K87	DAM-3CK3P-OL4-A191-K87
DB	5W5	DBMT-5C5P-OL4-A191-K87	DBMQ-5C5P-OL4-A191-K87	DBMU-5C5P-OL4-A191-K87	DBMX-5C5P-OL4-A191-K87	DBM-5C5P-OL4-A191-K87
DB	9W4	DBMT-9C4P-OL4-A191-K87	DBMQ-9C4P-OL4-A191-K87	DBMU-9C4P-OL4-A191-K87	DBMX-9C4P-OL4-A191-K87	DBM-9C4P-OL4-A191-K87
DB	13W3	DBMT-13C3P-OL4-A191-K87	DBMQ-3C3P-OL4-A191-K87	DBMU-13C3P-OL4-A191-K87	DBMX-13C3P-OL4-A191-K87	DBM-13C3P-OL4-A191-K87
DB	17W2	DBMT-17C2P-OL4-A191-K87	DBMQ-17C2P-OL4-A191-K87	DBMU-17C2P-OL4-A191-K87	DBMX-17C2P-OL4-A191-K87	DBM-17C2P-OL4-A191-K87
DB	21W1	DBMT-21C1P-OL4-A191-K87	DBMQ-21C1P-OL4-A191-K87	DBMU-21C1P-OL4-A191-K87	DBMX-21C1P-OL4-A191-K87	DBM-21C1P-OL4-A191-K87
DC	8W8	DCMT-8C8P-OL4-A191-K87	DCMQ-8C8P-OL4-A191-K87	DCMU-8C8P-OL4-A191-K87	DCMX-8C8P-OL4-A191-K87	DCM-8C8P-OL4-A191-K87
DC	13W6	DCMT-13C6P-OL4-A191-K87	DCMQ-13C6P-OL4-A191-K87	DCMU-13C6P-OL4-A191-K87	DCMX-13C6P-OL4-A191-K87	DCM-13C6P-OL4-A191-K87
DC	17W5	DCMT-17C5P-OL4-A191-K87	DCMQ-17C5P-OL4-A191-K87	DCMU-17C5P-OL4-A191-K87	DCMX-17C5P-OL4-A191-K87	DCM-17C5P-OL4-A191-K87
DC	21WA4	DCMT-21CA4P-OL4-A191-K87	DCMQ-21CA4P-OL4-A191-K87	DCMU-21CA4P-OL4-A191-K87	DCMX-21CA4P-OL4-A191-K87	DCM-21CA4P-OL4-A191-K87
DC	25W3	DCMT-25C3P-OL4-A191-K87	DCMQ-25C3P-OL4-A191-K87	DCMU-25C3P-OL4-A191-K87	DCMX-25C3P-OL4-A191-K87	DCM-25C3P-OL4-A191-K87
DC	27W2	DCMT-27C2P-OL4-A191-K87	DCMQ-27C2P-OL4-A191-K87	DCMU-27C2P-OL4-A191-K87	DCMX-27C2P-OL4-A191-K87	DCM-27C2P-OL4-A191-K87
DD	24W7	DDMT-24C7P-OL4-A191-K87	DDMQ-24C7P-OL4-A191-K87	DDMU-24C7P-OL4-A191-K87	DDMX-24C7P-OL4-A191-K87	DDM-24C7P-OL4-A191-K87
DD	36W4	DDMT-36C4P-OL4-A191-K87	DDMQ-36C4P-OL4-A191-K87	DDMU-36C4P-OL4-A191-K87	DDMX-36C4P-OL4-A191-K87	DDM-36C4P-OL4-A191-K87
DD	43W2	DDMT-43C2P-OL4-A191-K87	DDMQ-43C2P-OL4-A191-K87	DDMU-43C2P-OL4-A191-K87	DDMX-43C2P-OL4-A191-K87	DDM-43C2P-OL4-A191-K87
DD	47W1	DDMT-47C1P-OL4-A191-K87	DDMQ-47C1P-OL4-A191-K8	DDMU-47C1P-OL4-A191-K87	DDMX-47C1P-OL4-A191-K87	DDM-47C1P-OL4-A191-K87

For performance class 1 replace A191 wtih A190.
For Performance class 3 delete A191.

For 50 ohm coaxial replace C with X, Example:
DCM-13**C**6P-A191-K87-146 becomes
DCM-13**X**6P-A191-K87-146.

For 3,0 mm pushfit please add -146 modifier;
For 3,2 mm pushfit please add-162 modifier.

Plug



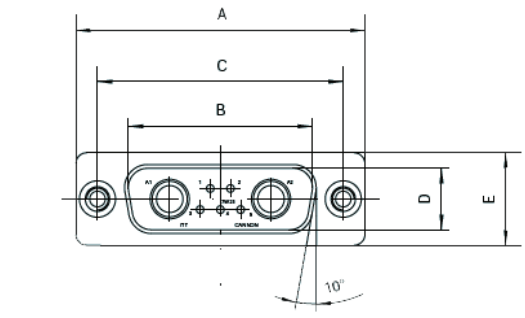

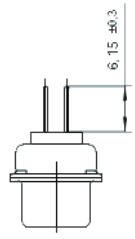

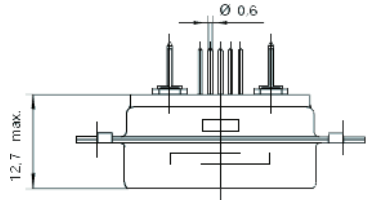

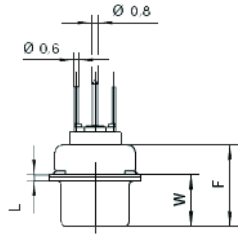

- For contact cavity arrangements, see page 61.
- For pcb hole pattern, see pages 76-78.
- For mounting methods, see pags 59-60.

Dimensions

Shell size	A ± 0,38 (.015)	B ± 0,13 (.005)	C ± 0,13 (.005)	D ± 0,13 (.005)	E ± 0,38 (.015)	F ± 0,25 (.010)	L ± 0,2 (008)	W ± 0,41 (.016)
DE	30,8 (1.213)	16,9 (.665)	25 (.984)	8,35 (.329)	12,55 (.494)	10,70 (.421)	0,8 (.031)	6,7 (.264)
DA	39,15 (1.541)	25,25 (.994)	33,3 (1.311)	8,35 (.329)	12,55 (.494)	10,70 (.421)	0,8 (.031)	6,7 (.264)
DB	53,05 (2.089)	38,95 (1.533)	47,05 (1.852)	8,35 (.329)	12,55 (.494)	10,80 (.425)	0,8 (.031)	6,8 (.268)
DC	69,3 (2.089)	55,4 (2.181)	63,50 (2,500)	8,35 (.329)	12,55 (.494)	10,80 (.425)	0,9 (.035)	6,8 (.268)
DD	66,95 (2.636)	52,8 (2.079)	61,11 (2,406)	11,1 (.437)	15,4 (.606)	10,80 (.425)	0,9 (.035)	6,85 (.270)

Coaxial straight- European solder socket, sizes DE – DD

75 Ohm* coax inserted with straight contacts

Shell	Layout	with standoff M3 pushfit	with standoff M3 with pushfit	standoff, M3 post and	with M3 clinch nut	with through hole 3,05 mm
DE	2W2	DEMT-2C2S-OL4-A191-A197	DEMQ-2C2S-OL4-A191-A197	DEMU-2C2S-OL4-A191-A197	DEMX-2C2S-OL4-A191-A197	DEM-2C2S-OL4-A191-A197
DE	2WK2	DEMT-2CK2S-OL4-A191-A197	DEMQ-2CK2S-OL4-A191-A197	DEMU-2CK2S-OL4-A191-A197	DEMX-2CK2S-OL4-A191-A197	DEM-2CK2S-OL4-A191-A197
DE	5W1	DEMT-5C1S-OL4-A191-A197	DEMQ-5C1S-OL4-A191-A197	DEMU-5C1S-OL4-A191-A197	DEMX-5C1S-OL4-A191-A197	DEM-5C1S-OL4-A191-A197
DA	7W2	DAMT-7C2S-OL4-A191-A197	DAMQ-7C2S-OL4-A191-A197	DAMU-7C2S-OL4-A191-A197	DAMX-7C2S-OL4-A191-A197	DAM-7C2S-OL4-A191-A197
DA	11W1	DAMT-11C1S-OL4-A191-A197	DAMQ-11C1S-OL4-A191-A197	DAMU-11C1S-OL4-A191-A197	DAMX-11C1S-OL4-A191-A197	DAM-11C1S-OL4-A191-A197
DA	3W3	DAMT-3C3S-OL4-A191-A197	DAMQ-3C3S-OL4-A191-A197	DAMU-3C3S-OL4-A191-A197	DAMX-3C3S-OL4-A191-A197	DAM-3C3S-OL4-A191-A197
DA	3WK3	DAMT-3CK3S-OL4-A191-A197	DAMQ-3CK3S-OL4-A191-A197	DAMU-3CK3S-OL4-A191-A197	DAMX-3CK3S-OL4-A191-A197	DAM-3CK3S-OL4-A191-A197
DB	5W5	DBMT-5C5S-OL4-A191-A197	DBMQ-5C5S-OL4-A191-A197	DBMU-5C5S-OL4-A191-A197	DBMX-5C5S-OL4-A191-A197	DBM-5C5S-OL4-A191-A197
DB	9W4	DBMT-9C4S-OL4-A191-A197	DBMQ-9C4S-OL4-A191-A197	DBMU-9C4S-OL4-A191A197	DBMX-9C4S-OL4-A191-A197	DBM-9C4S-OL4-A191-A197
DB	13W3	DBMT-13C3S-OL4-A191-A197	DBMQ-3C3S-OL4-A191-A197	DBMU-13C3S-OL4-A191-A197	DBMX-13C3S-OL4-A191-A197	DBM-13C3S-OL4-A191-A197
DB	17W2	DBMT-17C2S-OL4-A191-A197	DBMQ-17C2S-OL4-A191-A197	DBMU-17C2S-OL4-A191-A197	DBMX-17C2S-OL4-A191-A197	DBM-17C2S-OL4-A191-A197
DB	21W1	DBMT-21C1S-OL4-A191-A197	DBMQ-21C1S-OL4-A191-A197	DBMU-21C1S-OL4-A191-A197	DBMX-21C1S-OL4-A191-A197	DBM-21C1S-OL4-A191-A197
DC	8W8	DCMT-8C8S-OL4-A191-A197	DCMQ-8C8S-OL4-A191-A197	DCMU-8C8S-OL4-A191-A197	DCMX-8C8S-OL4-A191-A197	DCM-8C8S-OL4-A191-A197
DC	13W6	DCMT-13C6S-OL4-A191-A197	DCMQ-13C6S-OL4-A191-A197	DCMU-13C6S-OL4-A191-A197	DCMX-13C6S-OL4-A191-A197	DCM-13C6S-OL4-A191-A197
DC	17W5	DCMT-17C5S-OL4-A191-A197	DCMQ-17C5S-OL4-A191-A197	DCMU-17C5S-OL4-A191-A197	DCMX-17C5S-OL4-A191-A197	DCM-17C5S-OL4-A191-A197
DC	21WA4	DCMT-21CA4S-OL4-A191-A197	DCMQ-21CA4S-OL4-A191-A197	DCMU-21CA4S-OL4-A191-A197	DCMX-21CA4S-OL4-A191-A197	DCM-21CA4S-OL4-A191-A197
DC	25W3	DCMT-25C3S-OL4-A191-A197	DCMQ-25C3S-OL4-A191-A197	DCMU-25C3S-OL4-A191-A197	DCMX-25C3S-OL4-A191-A197	DCM-25C3S-OL4-A191-A197
DC	27W2	DCMT-27C2S-OL4-A191-A197	DCMQ-27C2S-OL4-A191-A197	DCMU-27C2S-OL4-A191-A197	DCMX-27C2S-OL4-A191-A197	DCM-27C2S-OL4-A191-A197
DD	24W7	DDMT-24C7S-OL4-A191-A197	DDMQ-24C7S-OL4-A191-A197	DDMU-24C7S-OL4-A191-A197	DDMX-24C7S-OL4-A191-A197	DDM-24C7S-OL4-A191-A197
DD	36W4	DDMT-36C4S-OL4-A191A197	DDMQ-36C4S-OL4-A191-A197	DDMU-36C4S-OL4-A191-A197	DDMX-36C4S-OL4-A191-A197	DDM-36C4S-OL4-A191-A197
DD	43W2	DDMT-43C2S-OL4-A191-A197	DDMQ-43C2S-OL4-A191-A197	DDMU-43C2S-OL4-A191-A197	DDMX-43C2S-OL4-A191-A197	DDM-43C2S-OL4-A191-A197
DD	47W1	DDMT-47C1S-OL4-A191-A197	DDMQ-47C1S-OL4-A191-A197	DDMU-47C1S-OL4-A191-A197	DDMX-47C1S-OL4-A191-A197	DDM-47C1S-OL4-A191A197

For performance class 1 replace A191 wtih A190.
For Performance class 3 delete A191.

For 50 ohm coaxial replace C with X, Example:
DCM-13**C**6S-A191-A197-146 becomes
DCM-13**X**6S-A191-A197-146.

For 3,0 mm pushfit please add -142 modifier;
For 3,2 mm pushfit please add -162 modifier.

Receptacle

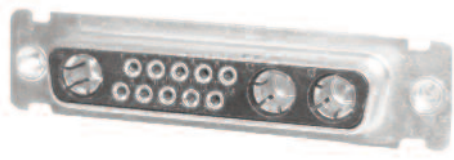

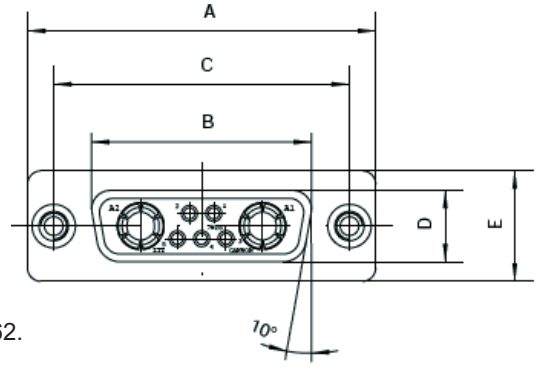

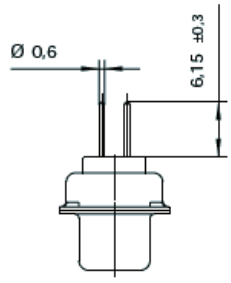

- For contact cavity arrangements, see page 62.
- For pcb hole pattern, see pages 79-81.
- For mounting methods, see pags 59-60.

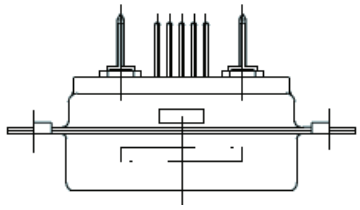

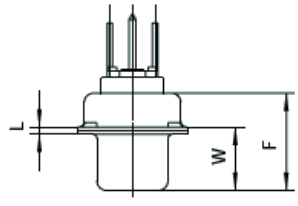

Dimensions

Shell size	A ± 0,38 (.015)	B ± 0,13 (.005)	C ± 0,13 (.005)	D ± 0,13 (.005)	E ± 0,38 (.015)	F ± 0,25 (.010)	L ± 0,2 (008)	W ± 0,41 (.016)
DE	30,8 (1.213)	16,35 (.644)	25 (.984)	7,9 (.311)	12,55 (.494)	10,90 (.429)	0,8 (.031)	6,95 (.274)
DA	39,15 (1.541)	24,65 (.970)	33,3 (1.311)	7,9 (.311)	12,55 (.494)	10,90 (.429)	0,8 (.031)	6,95 (.274)
DB	53,05 (2.089)	38,4 (1.512)	47,05 (1.852)	7,9 (.311)	12,55 (.494)	10,90 (.429)	0,8 (.031)	6,95 (.274)
DC	69,3 (2.089)	55,85 (2.159)	63,50 (2,500)	7,9 (.311)	12,55 (.494)	10,90 (.429)	0,8 (.031)	6,95 (.274)
DD	66,95 (2.636)	52,4 (2.063)	61,11 (2,406)	10,75 (.423)	15,4 (.606)	10,90 (.429)	0,8 (.031)	6,95 (.274)

Dimensions shown in mm
Specifications and dimensions subject to change

40 A High power 90° PCB Plug, sizes DE – DC, with metal bracket

		INDUSTRIAL – US 40 A High power inserted with US footprint metal bracket and UNC 4-40 captive nut		INDUSTRIAL – EU 40 A High power inserted with EU footprint metal bracket and UNC 4-40 captive nut		MILITARY/HI-REL – US 40 A High power inserted with US footprint metal bracket and UNC 4-40 screw lock		NON-MAGNETIC/LOW OUTGASSING – US* 40 A High power inserted with US footprint metal bracket and UNC 4-40 screw lock	
Shell size	**Layout**	**P/N without boardlock**	**P/N with boardlock**	**P/N without boardlock**	**P/N with boardlock**	**P/N without boardlock**	**P/N with boardlock**	**P/N with Cadmium Plating**	**P/N with Gold Plating**
DE	2W2	DEMP2H2P-JK87	DEMC2H2P-JK87	DEMP2P2P-VK87	DEMC2PK2P-VK87	DEMMP2H2P-J	DEMMC2H2P-J	DEM2H2P-JNMB	DEM2H2P-JNMBK52
DE	2WK2	DEMP2HK2P-JK87	DEMC2HK2P-JK87	DEMP2PK2P-VK87	DEMC2PK2P-VK87	DEMMP2HK2P-J	DEMMC2HK2P-J	DEM2HK2P-JNMB	DEM2HK2P-JNMBK52
DE	5W1	DEMP5H1P-JK87	DEMC5H1P-JK87	DEMP5P1P-VK87	DEMC5P1P-VK87	DEMMP5H1P-J	DEMMC5H1P-J	DEM5H1P-JNMB	DEM5H1P-JNMBK52
DA	7W2	DAMP7H2P-JK87	DAMC7H2P-JK87	DAMP7P2P-VK87	DAMC7P2P-VK87	DAMMP7H2P-J	DAMMC7H2P-J	DAM7H2P-JNMB	DAM7H2P-JNMBK52
DA	11W1	DAMP11H1P-JK87	DAMC11H1P-JK87	DAMP11P1P-VK87	DAMC11P1P-VK87	DAMMP11H1P-J	DAMMC11H1P-J	DAM11H1P-JNMB	DAM11H1P-JNMBK52
DA	3W3	DAMP3H3P-JK87	DAMC3H3P-JK87	DAMP3P3P-VK87	DAMC3P3P-VK87	DAMMP3H3P-J	DAMMC3H3P-J	DAM3H3P-JNMB	DAM3H3P-JNMBK52
DA	3WK3	DAMP3HK3P-JK87	DAMC3HK3P-JK87	DAMP3PK3P-VK87	DAMC3PK3P-VK87	DAMMP3HK3P-J	DAMMC3HK3P-J	DAM3HK3P-JNMB	DAM3HK3P-JNMBK52
DB	5W5	DBMP5H5P-JK87	DBMC5H5P-JK87	DBMP5P5P-VK87	DBMC5P5P-VK87	DBMMP5H5P-J	DBMMC5H5P-J	DBM5H5P-JNMB	DBM5H5P-JNMBK52
DB	9W4	DBMP9H4P-JK87	DBMC9H4P-JK87	DBMP9P4P-VK87	DBMC9P4P-VK87	DBMMP9H4P-J	DBMMC9H4P-J	DBM9H4P-JNMB	DBM9H4P-JNMBK52
DB	13W3	DBMP13H3P-JK87	DBMC13H3P-JK87	DBMP13P3P-VK87	DBMC13P3P-VK87	DBMMP13H3P-J	DBMMC13H3P-J	DBM13H3P-JNMB	DBM13H3P-JNMBK52
DB	17W2	DBMP17H2P-JK87	DBMC17H2P-JK87	DBMP17P2P-VK87	DBMC17P2P-VK87	DBMMP17H2P-J	DBMMC17H2P-J	DBM17H2P-JNMB	DBM17H2P-JNMBK52
DB	21W1	DBMP21H1P-JK87	DBMC21H1P-JK87	DBMP21P1P-VK87	DBMC21P1P-VK87	DBMMP21H1P-J	DBMMC21H1P-J	DBM21H1P-JNMB	DBM21H1P-JNMBK52
DC	8W8	DCMP8H8P-JK87	DCMC8H8P-JK87	DCMP8P8P-VK87	DCMC8P8P-VK87	DCMMP8H8P-J	DCMMC8H8P-J	DCM8H8P-JNMB	DCM8H8P-JNMBK52
DC	13W6	DCMP13H6P-JK87	DCMC13H6P-JK87	DCMP13P6P-VK87	DCMC13P6P-VK87	DCMMP13H6P-J	DCMMC13H6P-J	DCM13H6P-JNMB	DCM13H6P-JNMBK52
DC	17W5	DCMP17H5P-JK87	DCMC17H5P-JK87	DCMP17P5P-VK87	DCMC17P5P-VK87	DCMMP17H5P-J	DCMMC17H5P-J	DCM17H5P-JNMB	DCM17H5P-JNMBK52
DC	21WA4	DCMP21HA4P-JK87	DCMC21HA4P-JK87	DCMP21PA4P-VK87	DCMC21PA4P-VK87	DCMMP21HA4P-J	DCMMC21HA4P-J	DCM21HA4P-JNMB	DCM21HA4P-JNMBK52
DC	25W3	DCMP25H3P-JK87	DCMP25H3P-VK87	DCMC25P3P-VK87	DCMC25P3P-JK87	DCMMP25H3P-J	DCMMC25H3P-J	DCM25H3P-JNMB	DCM25H3P-JNMBK52
DC	27W2	DCMP27H2P-JK87	DCMC27H2P-JK87	DCMP27P2P-VK87	DCMC27P2P-VK87	DCMMP27H2P-J	DCMMC27H2P-J	DCM27H2P-JNMB	DCM27H2P-JNMBK52

* Hardware Modifier not allowed with Non Magnetic/ Low Outgassing Combo-D-; contact factory for more information

Plug



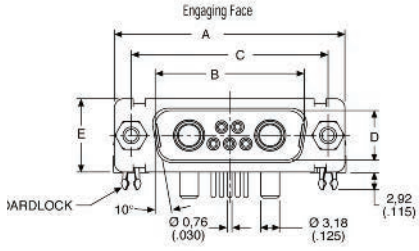

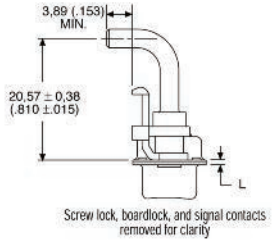

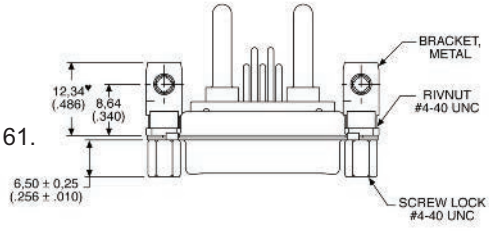

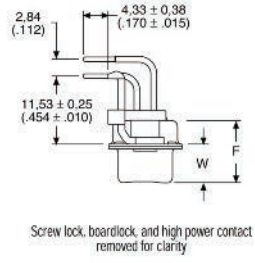

- For contact cavity arrangements, see page 61.
- For pcb hole pattern, see pages 82-84.
- For mounting methods, see pages 59-60.

US version shown – for EU version, please see readers resource section, page 92-93.

Dimensions

Shell size	**A ± 0,38 (.015)**	**B ± 0,13 (.005)**	**C ± 0,13 (.005)**	**D ± 0,13 (.005)**	**E ± 0,38 (.015)**	**F ± 0,25 (.010)**	**W ± 0,368 (.0145)**	**W ± 0,41 (.016)**	**L ± 0,25 (.010)**
DE	30,81 (1.213)	16,92 (.665)	24,99 (.984)	8,36 (.329)	12,55 (.494)	10,72 (.422)	6,693 (.2635)	—	0,76 (.030)
DA	39,14 (1.541)	25,25 (.994)	33,32 (1.312)	8,36 (.329)	12,55 (.494)	10,72 (.422)	6,693 (.2635)	—	0,76 (.030)
DB	53,04 (2.088)	38,96 (1.534)	47,04 (1.852)	8,36 (.329)	12,55 (.494)	10,82 (.426)	—	6,84 (.269)	0,99 (.039)
DC	69,32 (2.729)	55,42 (2.182)	63,50 (2,500)	8,36 (.329)	12,55 (.494)	10,82 (.426)	—	6,84 (.269)	0,99 (.039)

ITT

Dimensions shown in mm
Specifications and dimensions subject to change

www.ittcannon.com

40 A High power 90° PCB Plug, size DD, with metal bracket

40 A High power inserted with US footprint
metal bracket and UNC 4-40 captive nut

		INDUSTRIAL		MILITARY/HI-REL		NON-MAGNETIC/LOW OUTGASSING*	
Shell size	**Layout**	**P/N without Boardlock**	**P/N with Boardlock**	**P/N without Boardlock**	**P/N with UNC Boardlock**	**P/N with Cadmium Plating**	**P/N with Gold Plating**
DD	24WK7	DDMP24H7P-JK87	DDMC24H7P-JK87	DDMMP24H7P-J	DDMMC24H7P-J	DDM24H7P-JNMB	DDM24H7P-JNMBK52
DD	36W4	DDMP36H4P-JK87	DDMC36H4P-JK87	DDMMP36H4P-J	DDMMC36H4P-J	DDM36H7P-JNMB	DDM36H7P-JNMBK52
DD	43W2	DDMP43H2P-JK87	DDMC43H2P-JK87	DDMMP43H2P-J	DDMMC43H2P-J	DDM43H7P-JNMB	DDM43H7P-JNMBK52
DD	47W1	DDMP47H1P-JK87	DDMC47H1P-JK87	DDMMP47H1P-J	DDMMC47H1P-J	DDM47H7P-JNMB	DDM47H7P-JNMBK52

* Hardware Modifier not allowed with Non Magnetic/ Low Outgassing Combo-D; contact factory for more information

Plug

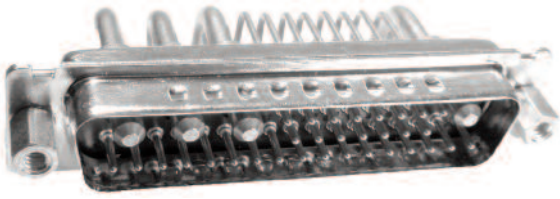

- For contact cavity arrangements, see page 61.
- For pcb hole pattern, see pages 82-84.
- For mounting methods, see pages 59-60.

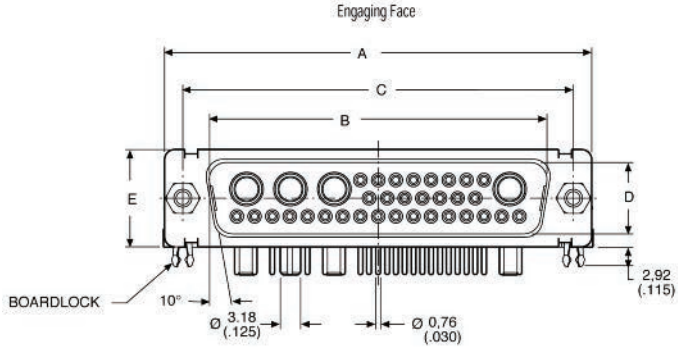

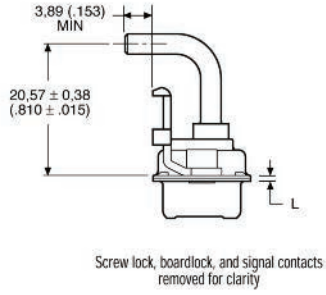

Screw lock, boardlock, and signal contacts removed for clarity

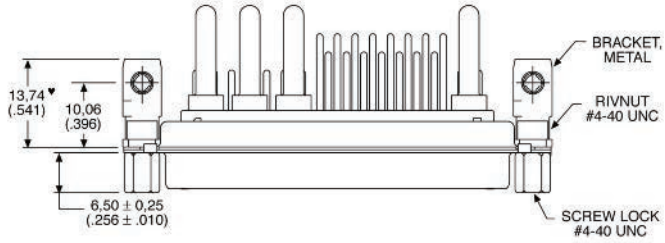

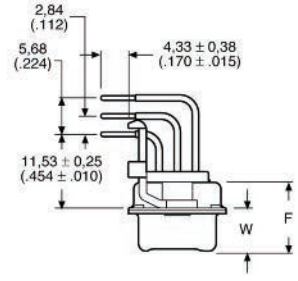

Screw lock, boardlock, and high power contact removed for clarity

Dimensions

Shell size	A ± 0,38 (.015)	B ± 0,13 (.005)	C ± 0,13 (.005)	D ± 0,13 (.005)	E ± 0,38 (.015)	F ± 0,25 (.010)	W ± 0,41 (.015)	L ± 0,25 (.010)
DD	66,93 (2.635)	52,81 (2.079)	61,11 (2,406)	11,07 (.436)	15,37 (.605)	10,82 (.426)	6,84 (.269)	0,99 (.039)

Dimensions shown in mm
Specifications and dimensions subject to change

40 A High power 90° PCB Receptacle, sizes DE – DC, with metal bracket

		INDUSTRIAL – US 40 A High power inserted with US footprint metal bracket and UNC 4-40 captive nut		INDUSTRIAL – EU 40 A High power inserted with EU footprint metal bracket and UNC 4-40 captive nut		MILITARY/HI-REL – US 40 A High power inserted with US footprint metal bracket and UNC 4-40 captive nut		NON-MAGNETIC/LOW OUTGASSING – US* 40 A High power inserted with US footprint metal bracket and UNC 4-40 screw lock	
Shell size	**Layout**	**P/N without Boardlock**	**P/N with Boardlock**	**P/N without Boardlock**	**P/N with Boardlock**	**P/N without Boardlock**	**P/N with Boardlock**	**P/N with Cadmium Plating**	**P/N with Gold Plating**
DE	2W2	DEMP2H2S-VA197	DEMC2H2S-VA197	DEMP2P2S-JA197	DEMC2P2S-JA197	DEMMP2H2S-V	DEMMC2H2S-V	DEM2H2S-VNMB	DEM2H2S-VNMBK52
DE	2WK2	DEMP2HK2S-VA197	DEMC2HK2S-VA197	DEMP2PK2S-JA197	DEMC2PK2S-JA197	DEMMP2HK2S-V	DEMMC2HK2S-V	DEM2HK2S-VNMB	DEM2HK2S-VNMBK52
DE	5W1	DEMP5H1S-VA197	DEMC5H1S-VA197	DEMP5P1S-JA197	DEMC5P1S-JA197	DEMMP5H1S-V	DEMMC5H1S-V	DEM5H1S-VNMB	DEM5H1S-VNMBK52
DA	7W2	DAMP7H2S-VA197	DAMC7H2S-VA197	DAMP7P2S-JA197	DAMC7P2S-JA197	DAMMP7H2S-V	DAMMC7H2S-V	DAM7H2S-VNMB	DAM7H2S-VNMBK52
DA	11W1	DAMP11H1S-VA197	DAMC11H1S-VA197	DAMP11P1S-JA197	DAMC11P1S-JA197	DAMMP11H1S-V	DAMMC11H1S-V	DAM11H1S-VNMB	DAM11H1S-VNMBK52
DA	3W3	DAMP3H3S-VA197	DAMC3H3S-VA197	DAMP3P3S-JA197	DAMC3P3S-JA197	DAMMP3H3S-V	DAMMC3H3S-V	DAM3H3S-VNMB	DAM3H3S-VNMBK52
DA	3WK3	DAMP3HK3S-VA197	DAMC3HK3S-VA197	DAMP3PK3S-JA197	DAMC3PK3S-JA197	DAMMP3HK3S-V	DAMMC3HK3S-V	DAM3HK3S-VNMB	DAM3HK3S-VNMBK52
DB	5W5	DBMP5H5S-VA197	DBMC5H5S-VA197	DBMP5P5S-JA197	DBMC5P5S-JA197	DBMMP5H5S-V	DBMMC5H5S-V	DBM5H5S-VNMB	DBM5H5S-VNMBK52
DB	9W4	DBMP9H4S-VA197	DBMC9H4S-VA197	DBMP9P4S-JA197	DBMC9P4S-JA197	DBMMP9H4S-V	DBMMC9H4S-V	DBM9H4S-VNMB	DBM9H4S-VNMBK52
DB	13W3	DBMP13H3S-VA197	DBMC13H3S-VA197	DBMP13P3S-JA197	DBMC13P3S-JA197	DBMMP13H3S-V	DBMMC13H3S-V	DBM13H3S-VNMB	DBM13H3S-VNMBK52
DB	17W2	DBMP17H2S-VA197	DBMC17H2S-VA197	DBMP17P2S-JA197	DBMC17P2S-JA197	DBMMP17H2S-V	DBMMC17H2S-V	DBM17H2S-VNMB	DBM17H2S-VNMBK52
DB	21W1	DBMP21H1S-VA197	DBMC21H1S-VA197	DBMP21P1S-JA197	DBMC21P1S-JA197	DBMMP21H1S-V	DBMMC21H1S-V	DBM21H1S-VNMB	DBM21H1S-VNMBK52
DC	8W8	DCMP8H8S-VA197	DCMC8H8S-VA197	DCMP8P8S-JA197	DCMC8P8S-JA197	DCMMP8H8S-V	DCMMC8H8S-V	DCM8H8S-VNMB	DCM8H8S-VNMBK52
DC	13W6	DCMP13H6S-VA197	DCMC13H6S-VA197	DCMP13P6S-JA197	DCMC13P6S-JA197	DCMMP13H6S-V	DCMMC13H6S-V	DCM13H6S-VNMB	DCM13H6S-VNMBK52
DC	17W5	DCMP17H5S-VA197	DCMC17H5S-VA197	DCMP17P5S-JA197	DCMC17P5S-JA197	DCMDMP17H5S-V	DCMMC17H5S-V	DCM17H5S-VNMB	DCM17H5S-VNMBK52
DC	21WA4	DCMP21HA4S-VA197	DCMC21HA4S-VA197	DCMP21PA4S-JA197	DCMC21PA4S-JA197	DCMMP21HA4S-V	DCMMC21HA4S-V	DCM21HA4S-VNMB	DCMG21HA4S-VNMBK52
DC	25W3	DCMP25H3S-VA197	DCMC25H3S-VA197	DCMP25P3S-JA197	DCMC25P3S-JA197	DCMMP25H3S-V	DCMMC25H3S-V	DCM25H3S-VNMB	DCM25H3S-VNMBK52
DC	27W2	DCMP27H2S-VA197	DCMC27H2S-VA197	DCMP27P2S-JA197	DCMC27P2S-JA197	DCMMP27H2S-V	DCMMC27H2S-V	DCM27H2S-VNMB	DCM27H2S-VNMBK52

* Hardware Modifier not allowed with Non Magnetic/ Low Outgassing Combo-D; contact factory for more information

Receptacle

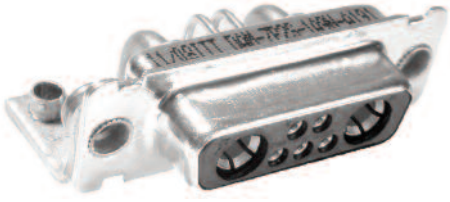

- For contact cavity arrangements, see page 61.
- For pcb hole pattern, see pages 85-87.
- For mounting methods, see pages 59-60.

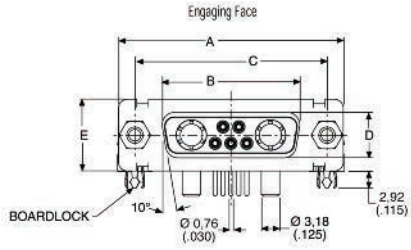

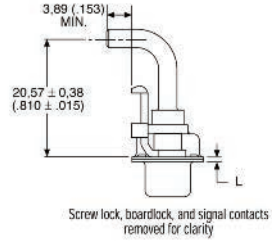

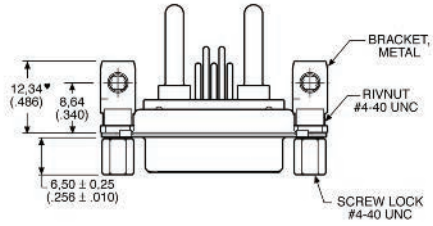

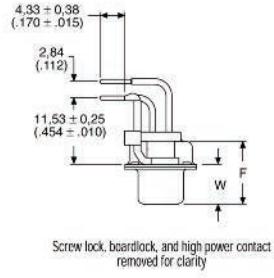

US version shown – for EU version, please see readers resource section, page 94-95.

Dimensions

Shell size	A ± 0,38 (.015)	B ± 0,13 (.005)	C ± 0,13 (.005)	D ± 0,13 (.005)	E ± 0,38 (.015)	F ± 0,25 (.010)	W ± 0,38 (.015)	L ± 0,25 (.010)
DE	30,81 (1.213)	16,33 (.643)	24,99 (.984)	7,90 (.311)	12,55 (.494)	10,90 (.429)	6,94 (.273)	0,76 (.030)
DA	39,14 (1.541)	24,65 (.971)	33,32 (1.312)	7,90 (.311)	12,55 (.494)	10,90 (.429)	6,94 (.273)	0,76 (.030)
DB	53,04 (2.088)	38,38 (1.511)	47,04 (1.852)	7,90 (.311)	12,55 (.494)	10,90 (.429)	6,94 (.273)	0,76 (.030)
DC	69,32 (2.729)	54,84 (2.159)	63,50 (2,500)	7,90 (.311)	12,55 (.494)	10,90 (.429)	6,94 (.273)	0,76 (.030)

Dimensions shown in mm
Specifications and dimensions subject to change

40 A High power 90° PCB Receptacle, size DD, with metal bracket

40 A High power inserted with US footprint
metal bracket and UNC 4-40 captive nut

		INDUSTRIAL		MILITARY/HI-REL		NON-MAGNETIC/LOW OUTGASSING*	
Shell size	Layout	P/N without Boardlock	P/N with Boardlock	P/N without Boardlock	P/N with UNC Boardlock	P/N with Cadmium Plating	P/N with Gold Plating
DD	24WK7	DDMP24H7S-JA197	DDMC24H7S-JA197	DDMMP24H7S-J	DDMMC24H7S-J	DDM24H7S-JNMB	DDM24H7S-JNMBK52
DD	36W4	DDMP36H4S-JA197	DDMC36H4S-JA197	DDMMP36H4S-J	DDMMC36H4S-J	DDM36H4S-JNMB	DDM36H4S-JNMBK52
DD	43W2	DDMP43H2S-JA197	DDMC43H2S-JA197	DDMMP43H2S-J	DDMMC43H2S-J	DDM43H2S-JNMB	DDM43H2S-JNMBK52
DD	47W1	DDMP47H1S-JA197	DDMC47H1S-JA197	DDMMP47H1S-J	DDMMC47H1S-J	DDM47H1S-JNMB	DDM47H1S-JNMBK52

* Hardware Modifier not allowed with Non Magnetic/ Low Outgassing Combo-D; contact factory for more information

Plug

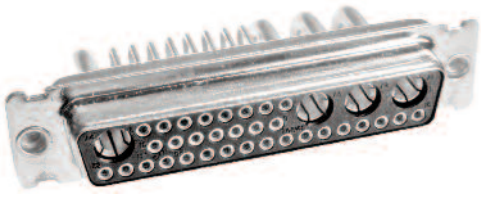

- For contact cavity arrangements, see page 62.
- For pcb hole pattern, see page 85-87.
- For mounting methods, see pages 59-60.

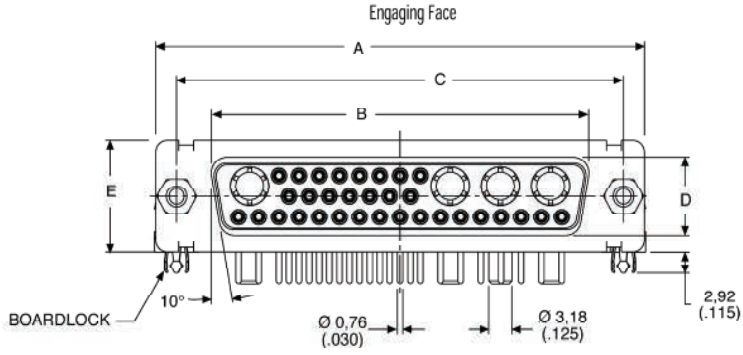

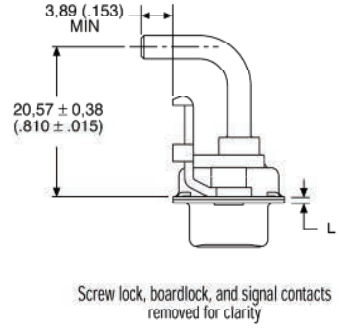

Screw lock, boardlock, and signal contacts removed for clarity

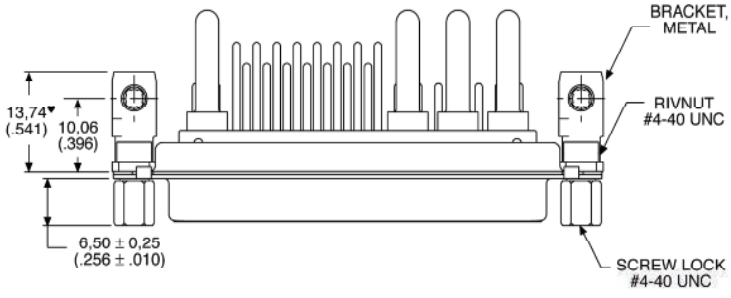

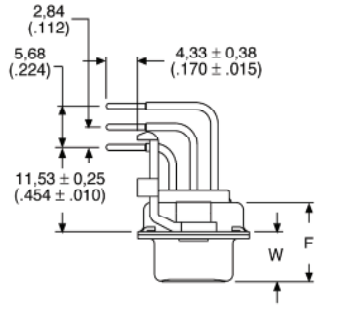

Screw lock, boardlock, and high power contact removed for clarity

Dimensions

Shell size	A ± 0,38 (.015)	B ± 0,13 (.005)	C ± 0,13 (.005)	D ± 0,13 (.005)	E ± 0,38 (.015)	F ± 0,25 (.010)	W ± 0,38 (.015)	L ± 0,25 (.010)
DD	66,93 (2.635)	52,42 (2.064)	61,11 (2,406)	10,74 (.423)	15,37 (.605)	10,90 (.429)	6,94 (.273)	0,76 (.030)

40 A High Power 90° PCB Plug- European footprint, sizes DE-DC, with bracket

40 A High power inserted with US footprint
metal bracket and UNC 4-40 captive nut

		Part numbers with bracket and captive nut M3		Part numbers with bracket with dia. 3,05		Part numbers with bracket with post M3	
Shell size	**Layout**	**Plastic Bracket**	**Metal Bracket**	**Plastic Bracket**	**Metal Bracket**	**Plastic Bracket**	**Metal Bracket**
DE	2W2	DEM-2P2P-1ATN-A191-K87	DEM-2P2P-1A9N-A191-K87	DEM-2P2P-1A5N-A191-K87	DEM-2P2P-1AFN-A191-K87	DEM-2P2P-APN-A191-K87	DEM-SP2P-1AHN-A191-K87
DE	2WK2	DEM-2PK2P-1ATN-A191-K87	DEM-2PK2P-1A9N-A191-K87	DEM-2PK2P-1A5N-A191-K87	DEM-2PK2P-1AFN-A191-K87	DEM-2PK2P-APN-A191-K87	DEM-2PK2P-1AHN-A191-K87
DE	5W1	DEM-5P1P-1ATN-A191- K87	DEM-5P1P-1A9N-A191-K87	DEM-5P1P-1A5N-A191-K87	DEM-5P1P-1AFN-A191-K87	DEM-5P1P-APN-A191-K87	DEM-5P1P-1AHN-A191-K87
DA	7W2	DAM-7P2P-1ATN-A191-K87	DAM-7P2P-1A9N-A191-K87	DAM-7P2P-1A5N-A191-K87	DAM-7P2P-1AFN-A191-K87	DAM-7P2P-1APN-A191-K87	DAM-7P2P-1AHN-A191-K87
DA	11W1	DAM-11P1P-1ATN-A191-K87	DAM-11P1P-1A9N-A191-K87	DAM-11P1P-1A5N-A191-K87	DAM-11P1P-1AFN-A191-K87	DAM-11P1P-1APN-A191-K87	DAM-11P1P-1AHN-A191-K87
DA	3W3	DAM-3P3P-1ATN-A191-K87	DAM-3P3P-1A9N-A191-K87	DAM-3P3P-1A5N-A191-K87	DAM-3P3P-1AFN-A191-K87	DAM-3P3P-1APN-A191-K87	DAM-3P3P-1AHN-A191-K87
DA	3WK3	DAM-3PK3P-1ATN-A191-K87	DAM-3PK3P-1A9N-A191-K87	DAM-3PK3P-1A5N-A191-K87	DAM-3PK3P-1AFN-A191-K87	DAM-3PK3P-1APN-A191-K87	DAM-3PK3P-1AHN-A191-K87
DB	5W5	DBM-5P5P-1ATN-A191-K87	DBM-5P5P-1A9N-A191-K87	DBM-5P5P-1A5N-A191-K87	DBM-5P5P-1AFN-A191-K87	DBM-5P5P-1APN-A191-K87	DBM-5P5P-1AHN-A191-K87
DB	9W4	DBM-9P4P-1ATN-A191-K87	DBM-9P4P-1A9N-A191-K87	DBM-9P4P-1A5N-A191-K87	DBM-9P4P-1AFN-A191-K87	DBM-9P4P-1APN-A191-K87	DBM-9P4P-1AHN-A191-K87
DB	13W3	DBM-13P3P-1ATN-A191-K87	DBM-13P3P-1A9N-A191-K87	DBM-13P3P-1A5N-A191-K87	DBM-1PC3P-1AFN-A191-K87	DBM-13P3P-1APN-A191-K87	DBM-13P3P-1AHN-A191-K87
DB	17W2	DBM-17PSP-1ATN-A191-K87	DBM-17PSP-1A9N-A191-K87	DBM-17PSP-1A5N-A191-K87	DBM-17PSP-1AFN-A191-K87	DBM-17PSP-1APN-A191-K87	DBM-17PSP-1AHN-A191-K87
DB	21W1	DBM-21P1P-1ATN-A191-K87	DBM-21P1P-1A9N-A191-K87	DBM-21P1P-1A5N-A191-K87	DBM-21P1P-1AFN-A191-K87	DBM-21P1P-1APN-A191-K87	DBM-21P1P-1AHN-A191-K87
DC	8W8	DCM-8P8P-1ATN-A191-K87	DCM-8P8P-1A9N-A191-K87	DCM-8P8P-1A5N-A191-K87	DCM-8P8P-1AFN-A191-K87	DCM-8P8P-1APN-A191-K87	DCM-8P8P-1AHN-A191-K87
DC	13W6	DCM-13P6P-1ATN-A191-K87	DCM-13P6P-1A9N-A191-K87	DCM-13P6P-1A5N-A191-K87	DCM-13P6P-1AFN-A191-K87	DCM-13P6P-1APN-A191-K87	DCM-13P6P-1AHN-A191-K87
DC	17W5	DCM-17P5P-1ATN-A191-K87	DCM-17P5P-1A9N-A191-K87	DCM-17P5P-1A5N-A191-K87	DCM-17P5P-1AFN-A191-K87	DCM-17P5P-1APN-A191-K87	DCM-17P5P-1AHN-A191-K87
DC	21WA4	DCM-21PA4P-1ATN-A191-K87	DCM-21PA4P-1A9N-A191-K87	DCM-21PA4P-1A5N-A191-K87	DCM-21PA4P-1AFN-A191-K87	DCM-21PA4S-1APN-A191-K87	DCM-21PA4P-1AHN-A191-K87
DC	25W3	DCM-25P3P-1ATN-A191-K87	DCM-25P3P-1A9N-A191-K87	DCM-25P3P-1A5N-A191-K87	DCM-25P3P-1AFN-A191-K87	DCM-25P3P-1APN-A191-K87	DCM-25P3P-1AHN-A191-K87
DC	27W2	DCM-27P2P-1ATN-A191-K87	DCM-27P2P-1A9N-A191-K87	DCM-27P2P-1A5N-A191-K87	DCM-27P2P-1AFN-A191-K87	DCM-27P2P-1APN-A191-K87	DCM-27P2-1AHN-A191-K87

For performance class 1 replace A191 with A190.
For performance class 3 delete A191.

For 3,0 mm pushfit please add -146 modifier;
For 3,2 mm pushfit please add -162 modifer.

Plug

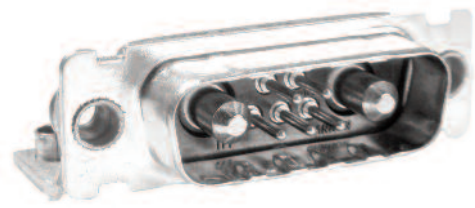

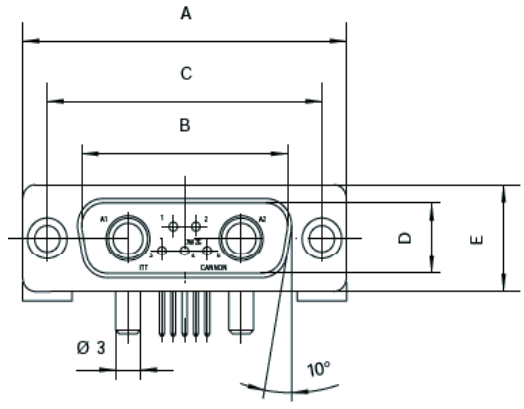

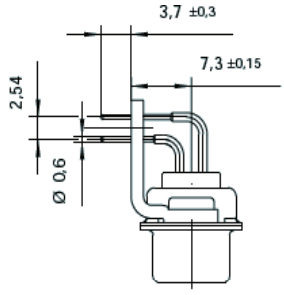

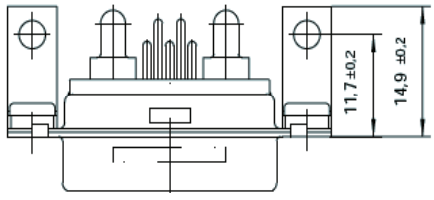

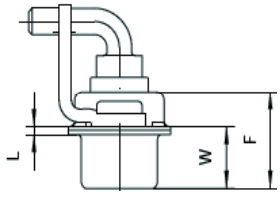

- For contact cavity arrangements, see page 61.
- For pcb hole pattern, see pages 88-89.
- For mounting methods, see pages 59-60.

Dimensions

Shell size	**A ± 0,38 (.015)**	**B ± 0,13 (.005)**	**C ± 0,13 (.005)**	**D ± 0,13 (.005)**	**E ± 0,38 (.015)**	**F ± 0,25 (.010)**	**L ± 0,2 (008)**	**W ± 0,40 (.016)**
DE	30,8 (1.213)	16,90 (.665)	25,0 (.984)	8,35 (.329)	12,55 (.494)	10,70 (.421)	0,8 (.031)	6,70 (.264)
DA	39,15 (1.541)	24,25 (.994)	33,3 (1.311)	8,35 (.329)	12,55 (.494)	10,70 (.421)	0,8 (.031)	6,70 (.264)
DB	53,05 (2.089)	38,95 (1.533)	47,05 (1.852)	8,35 (.329)	12,55 (.494)	10,80 (.425)	0,8 (.031)	6,80 (.268)
DC	69,3 (2.089)	55,4 (2.181)	63,50 (2,500)	8,35 (.329)	12,55 (.494)	10,80 (.425)	0,8 (.031)	6,80 (.268)

Dimensions shown in mm
Specifications and dimensions subject to change

40 A High power 90° Plug- European footprint, size DD with bracket

Part numbers with bracket and captive nut M3

Shell size	Layout	P/N without Boardlock	P/N with Boardlock
DD	24W7	DDM-24P7P-1A9N-A191-K87	DDM-24P7P-1ATN-A191-K87
DD	36W4	DDM-36P4P-1A9N-A191-K87	DDM-36P4P-1ATN-A191-K87
DD	43W2	DDM-43P2P-1A9N-A191-K87	DDM-43P2P-1ATN-A191-K87
DD	47W1	DDM-47P1P-1A9N-A191-K87	DDM-47P1P-1ATN-A191-K87

Part numbers with bracket with bushing diam. 3,05

P/N without Boardlock	P/N with UNC Boardlock	P/N with through Boardlock	P/N with Boardlock
DDM-24P7P-1AFN-A191-K87	DDM-24P7P-1A5N-A191-K87	DDM-24P7P-1AHN-A191-K87	DDM-24P7P-1APN-A191-K87
DDM-36P4P-1AFN-A191-K87	DDM-36P4P-1A5N-A191-K87	DDM-36P4P-1AHN-A191-K87	DDM-36P4P-1APN-A191-K87
DDM-43P2P-1AFN-A191-K87	DDM-43P2P-1A5N-A191-K87	DDM-43P2P-1AHN-A191-K87	DDM-43P2P-1APN-A191-K87
DDM-47P1P-1AFN-A191-K87	DDM-47P1P-1A5N-A191-K87	DDM-47P1P-1AHN-A191-K87	DDM-47P1P-1APN-A191-K87

Part numbers with bracket and post M3

Plug



- For contact cavity arrangements, see page 61.
- For pcb hole pattern, see pages 88-89.
- For mounting methods, see pages 59-60.

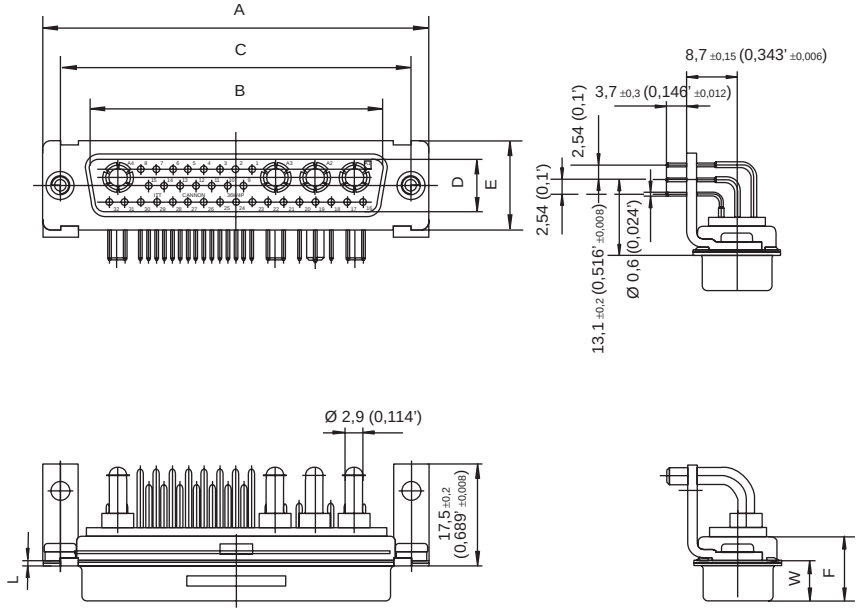

Dimensions

Shell size	A ± 0,38 (.015)	B ± 0,13 (.005)	C ± 0,13 (.005)	D ± 0,13 (.005)	E ± 0,38 (.015)	F ± 0,25 (.010)	L ± 0,20 (.008)	W ± 0,40 (.015)
DD	66,93 (2.636)	52,08 (2.050)	61,11 (2,406)	11,10 (.437)	15,40 (.606)	10,80 (.425)	0,90 (.035)	6,85 (.270)

40 A High power 90° Receptacle, European footprint, sizes DE-DC, with bracket

40 A High power inserted with US footprint
metal bracket and UNC 4-40 captive nut

		Part numbers with bracket and captive nut M3		Part numbers with bracket with dia. 3,05		Part numbers with bracket with post M3	
Shell size	Layout	Metal Bracket	Plastic Bracket	Metal Bracket	Plastic Bracket	Metal Bracket	Plastic Bracket
DE	2W2	DEM-2P2S-1A9N-A191-A197	DEM-2P2S-1ATN-A191-A197	DEM-2P2-1AFN-A191-A197	DEM-2P2S-1A5N-A191-A197	DEM-2P2S-1AHN-A191-A197	DEM-2P2S-1APN-A191-A197
DE	2WK2	DEM-2PK2S-1A9N-A191-A197	DEM-2PK2S-1ATN-A191-A197	DEM-2PK2-1AFN-A191-A197	DEM-2PK2S-1A5N-A191-A197	DEM-2PK2S-1AHN-A191-A197	DEM-2PK2S-1APN-A191-A197
DE	5W1	DEM-5P1S-1A9N-A191-A197	DEM-5P1S-1ATN-A191-A197	DEM-5P1S-1AFN-A191-A197	DEM-5P1S-1A5N-A191-A197	DEM-5P1S-1AHN-A191-A197	DEM-5P1S-1APN-A191-A197
DA	7W2	DAM-7P2S-1A9N-A191-A197	DAM-7P2S-1ATN-A191-A197	DAM-7P2S-1AFN-A191-A197	DAM-7P2S-1A5N-A191-A197	DAM-7P2S-1AHN-A191-A197	DAM-7P2S-1APN-A191-A197
DA	11W1	DAM-11P1S-1A9N-A191-A197	DAM-11P1S-1ATN-A191-A197	DAM-11P1S-1AFN-A191-A197	DAM-11P1S-1A5N-A191-A197	DAM-11P1S-1AHN-A191-A197	DAM-11P1S-1APN-A191-A197
DA	3W3	DAM-3P3S-1A9N-A191-A197	DAM-3P3S-1ATN-A191-A197	DAM-3P3S-1AFN-A191-A197	DAM-11P1S-1A5N-A191-A197	DAM-3P3S-1AHN-A191-A197	DAM-3P3S-1APN-A191-A197
DA	3WK3	DAM-3PK3S-1A9N-A191-A197	DAM-3PK3S-1ATN-A191-A197	DAM-3PK3S-1AFN-A191-A197	DAM-3PK3S-1A5N-A191-A197	DAM-3PK3S-1AHN-A191-A197	DAM-3PK3S-1APN-A191-A197
DB	5W5	DBM-5P5S-1A9N-A191-A197	DBM-5P5S-1ATN-A191-A197	DBM-5P5S-1AFN-A191-A197	DBM-5P5S-1A5N-A191-A197	DBM-5P5S-1AHN-A191-A197	DBM-5P5S-1APN-A191-A197
DB	9W4	DBM-9P4S-1A9N-A191-A197	DBM-9P4S-1ATN-A191-A197	DBM-9P4S-1AFN-A191-A197	DBM-9P4S-1A5N-A191-A197	DBM-9P4S-1AHN-A191-A197	DBM-9P4S-1APN-A191-A197
DB	13W3	DBM-13P3S-1A9N-A191-A197	DBM-13P3S-1ATN-A191-A197	DBM-13P3S-1AFN-A191-A197	DBM-13P3S-1A5N-A191-A197	DBM-13P3S-1AHN-A191-A197	DBM-13P3S-1APN-A191-A197
DB	17W2	DBM-17P2S-1A9N-A191-A197	DBM-17P2S-1ATN-A191-A197	DBM-17P2S-1AFN-A191-A197	DBM-17P2S-1A5N-A191-A197	DBM-17P2S-1AHN-A191-A197	DBM-17P2S-1APN-A191-A197
DB	21W1	DBM-21P1S-1A9N-A191-A197	DBM-21P1S-1ATN-A191-A197	DBM-21P1S-1AFN-A191-A197	DBM-21P1S-1A5N-A191-A197	DBM-21P1S-1AHN-A191-A197	DBM-21P1S-1APN-A191-A197
DC	8W8	DCM-8P8S-1A9N-A191-A197	DCM-8P8S-1ATN-A191-A197	DCM-8P8S-1AFN-A191-A197	DCM-8P8S-1A5N-A191-A197	DCM-8P8S-1AHN-A191-A197	DCM-8P8S-1APN-A191-A197
DC	13W6	DCM-13P6S-1A9N-A191-A197	DCM-13P6S-1ATN-A191-A197	DCM-13P6S-1AFN-A191-A197	DCM-13P6S-1A5N-A191-A197	DCM-13P6S-1AHN-A191-A197	DCM-13P6S-1APN-A191-A197
DC	17W5	DCM-17P5S-1A9N-A191-A197	DCM-17P5S-1ATN-A191-A197	DCM-17P5S-1AFN-A191-A197	DCM-17P5S-1A5N-A191-A197	DCM-17P5S-1AHN-A191-A197	DCM-17P5S-1APN-A191-A197
DC	21WA4	DCM-21PA4S-1A9N-A191-A197	DCM-21PA4S-1ATN-A191-A197	DCM-21PA4S-1AFN-A191-A197	DCM-21PA4S-1A5N-A191-A197	DCM-21PA4S-1AHN-A191-A197	DCM-21PA4S-1APN-A191-A197
DC	25W3	DCM-25P3S-1A9N-A191-A197	DCM-25P3S-1ATN-A191-A197	DCM-25P3S-1AFN-A191-A197	DCM-25P3S-1A5N-A191-A197	DCM-25P3S-1AHN-A191-A197	DCM-25P3S-1APN-A191-A197
DC	27W2	DCM-27P2S–1A9N-A191-A197	DCM-27P2S–1ATN-A191-A197	DCM-27P2S–1AFN-A191-A197	DCM-27P2S–1A5N-A191-A197	DCM-27P2S–1AHN-A191-A197	DCM-27P2S–1APN-A191-A197

For pushfit add -146 modifier.
For performance class 1 replace A191 wtih A190.
For performance class 3 delete A191.

For captive nut 4-40 UNC thread replace 1A9N with 1A7N and 1AHN with 1A8N.

For pushfit 90° pcb hole diameter 3,2 mm replace 146 with 162.

Receptacle

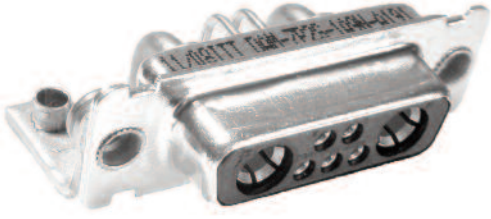

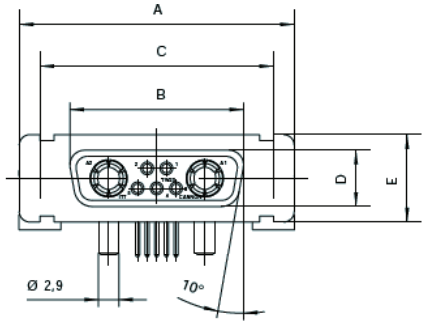

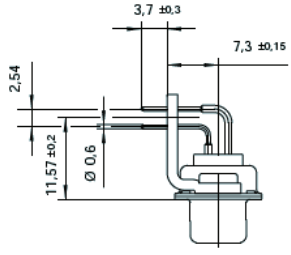

- For contact cavity arrangements, see page 62.
- For pcb hole pattern, see pages 90-91.
- For mounting methods, see pages 59-60.

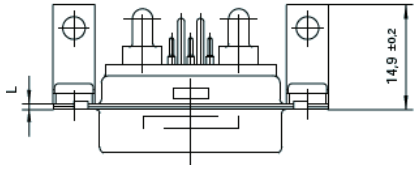

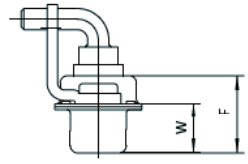

Dimensions

Shell size	A ± 0,38 (.015)	B ± 0,13 (.005)	C ± 0,13 (.005)	D ± 0,13 (.005)	E ± 0,38 (.015)	F ± 0,25 (.010)	L ± 0,2 (008)	W ± 0,40 (.016)
DE	30,8 (1.213)	16,35 (.644)	25,0 (.984)	7,9 (.311)	12,55 (.494)	10,90 (.429)	0,8 (.031)	6,95 (.274)
DA	39,15 (1.541)	24,65 (.970)	33,3 (1.311)	7,9 (.311)	12,55 (.494)	10,90 (.429)	0,8 (.031)	6,95 (.274)
DB	53,05 (2.089)	38,4 (1.512)	47,05 (1.852)	7,9 (.311)	12,55 (.494)	10,90 (.429)	0,8 (.031)	6,95 (.274)
DC	69,3 (2.089)	54,85 (2.159)	63,50 (2,500)	7,9 (.311)	12,55 (.494)	10,90 (.429)	0,8 (.031)	6,95 (.274)

Dimensions shown in mm
Specifications and dimensions subject to change

40 A High power 90° Receptacle - European footprint, size DD, with bracket

Part numbers with bracket and captive nut M3

Part numbers with bracket with bushing diam. 3,05

Part numbers with bracket and post M3

Shell size	Layout	P/N without Boardlock	P/N with Boardlock	P/N without Boardlock	P/N with UNC Boardlock	P/N with through Boardlock	P/N with Boardlock
DD	24WK7	DDM-24P7S-1A9N-A191-A197	DDM-24P7S-1ATN-A191-A197	DDM-24P7S-1AFN-A191-A197	DDM-24P7S-1A5N-A191-A197	DDM-24P7S-1AHN-A191-A197	DDM-24P7S-1APN-A191-A197
DD	36W4	DDM-36P4S-1A9N-A191-A197	DDM-36P4S-1ATN-A191-A197	DDM-36P4S-1AFN-A191-A197	DDM-36P4S-1A5N-A191-A197	DDM-36P4S-1AHN-A191-A197	DDM-36P4S-1APN-A191-A197
DD	43W2	DDM-43P2S-1A9N-A191-A197	DDM-43P2S-1ATN-A191-A197	DDM-43P2S-1AFN-A191-A197	DDM-43P2S-1A5N-A191-A197	DDM-43P2S-1AHN-A191-A197	DDM-43P2S-1APN-A191-A197
DD	47W1	DDM-47P1S-1A9N-A191-A197	DDM-47P1S-1ATN-A191-A197	DDM-47P1S-1AFN-A191-A197	DDM-47P1S-1A5N-A191-A197	DDM-47P1S-1AHN-A191-A197	DDM-47P1S-1APN-A191-A197

For captive nut 4-40 UNC replace 1A9N with 1A7N and 1AHN with 1A8N.

Receptacle

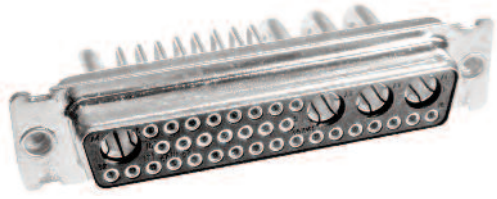

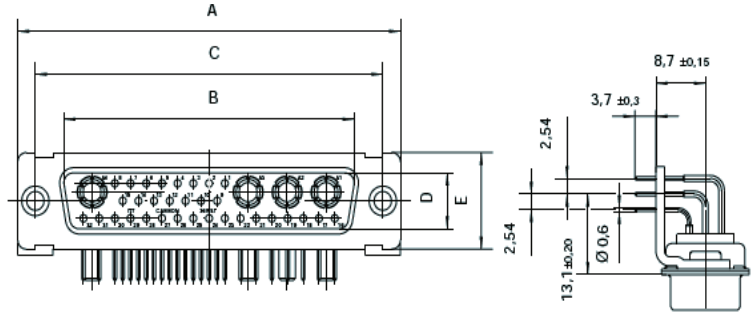

- For contact cavity arrangements, see page 62.
- For pcb hole pattern, see pages 90-91.
- For mounting methods, see pages 59-60.

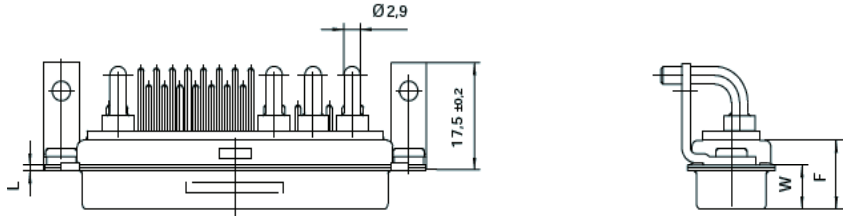

Dimensions

Shell size	A ± 0,38 (.015)	B ± 0,13 (.005)	C ± 0,13 (.005)	D ± 0,13 (.005)	E ± 0,38 (.015)	F ± 0,25 (.010)	W ± 0,38 (.015)	L ± 0,25 (.010)
DD	66,93 (2.635)	52,42 (2.064)	61,11 (2,406)	10,74 (.423)	15,37 (.605)	10,90 (.429)	6,84 (.269)	0,76 (.030)

40 A High power straight PCB Plug, sizes DE – DC

40 A High power inserted with straight contacts and standoff with UNC 4-40 thread

		INDUSTRIAL		MILITARY/HI-REL		NON-MAGNETIC*/LOW OUTGASSING**	
Shell size	Layout	P/N without Boardlock	P/N with Boardlock	P/N without Boardlock	P/N with UNC Boardlock	P/N with Cadmium Plating	P/N with Gold Plating
DE	2W2	DEMV2H2P-NK87	DEMZ2H2P-NK87	DEMMV2H2P-N	DEMMZ2H2P-N	DEM2H2P-NNMB	DEMZ2H2P-NNMBK52
DE	2WK2	DEMV2HK2P-NK87	DEMZ2HK2P-NK87	DEMMV2HK2P-N	DEMMZ2HK2P-N	DEM2HK2P-NNMB	DEMZ2HK2P-NNMBK52
DE	5W1	DEMV5H1P-NK87	DEMZ5H1P-NK87	DEMMV5H1P-N	DEMMZ5H1P-N	DEM5H1P-NNMB	DEMZ5H1P-NNMBK52
DA	7W2	DAMV7H2P-NK87	DAMZ7H2P-NK87	DAMMV7H2P-N	DAMMZ7H2P-N	DAM7H2P-NNMB	DAMZ7H2P-NNMBK52
DA	11W1	DAMV11H1P-NK87	DAMZ11H1P-NK87	DAMMV11H1P-N	DAMMZ11H1P-N	DAM11H1P-NNMB	DAMZ11H1P-NNMBK52
DA	3W3	DAMV3H3P-NK87	DAMZ3H3P-NK87	DAMMV3H3P-N	DAMMZ3H3P-N	DAM3H3P-NNMB	DAMZ3H3P-NNMBK52
DA	3WK3	DAMV3HK3-NK87	DAMZ3HK3P-NK87	DAMMV3HK3P-N	DAMMZ3HK3P-N	DAM3HK3P-NNMB	DAMZ3HK3P-NNMBK52
DB	5W5	DBMV5H5P-NK87	DBMZ5H5P-NK87	DBMMV5H5P-N	DBMMZ5H5P-N	DBM5H5P-NNMB	DBMZ5H5P-NNMBK52
DB	9W4	DBMV9H4P-NK87	DBMZ9H4P-NK87	DBMMV9H4P-N	DBMMZ9H4P-N	DBM9H4P-NNMB	DBMZ9H4P-NNMBK52
DB	13W3	DBMV13H3P-NK87	DBMZ13H3P-NK87	DBMMV13H3P-N	DBMMZ13H3P-N	DBM13H3P-NNMB	DBMZ13H3P-NNMBK52
DB	17W2	DBMV17H2P-NK87	DBMZ17H2P-NK87	DBMMV17H2P-N	DBMMZ17H2P-N	DBM17H2P-NNMB	DBMZ17H2P-NNMBK52
DB	21W1	DBMV21H1P-NK87	DBMZ21H1P-NK87	DBMMV21H1P-N	DBMMZ21H1P-N	DBM21H1P-NNMB	DBMZ21H1P-NNMBK52
DC	8W8	DCMV8H8P-NK87	DCMZ8H8P-NK87	DCMMV8H8P-N	DCMMZ8H8P-N	DCM8H8P-NNMB	DCMZ8H8P-NNMBK52
DC	13W6	DCMV13H6P-NK87	DCMZ13H6P-NK87	DCMMV13H6P-N	DCMMZ13H6P-N	DCM13H6P-NNMB	DCMZ13H6P-NNMBK52
DC	17W5	DCMV17H5P-NK87	DCMZ17H5P-NK87	DCMMV17H5P-N	DCMMZ17H5P-N	DCM17H5P-NNMB	DCMZ17H5P-NNMBK52
DC	21WA4	DCMV21HA4P-NK87	DCMZ21HA4P-NK87	DCMMV21HA4P-N	DCMMZ21HA4P-N	DCM21HA4P-NNMB	DCMZ21HA4P-NNMBK52
DC	25W3	DCMV25H3P-NK87	DCMZ25H3P-NK87	DCMMV25H3P-N	DCMMZ25H3P-N	DCM25H3P-NNMB	DCMZ25H3P-NNMBK52
DC	27W2	DCMV27H2P-NK87	DCMZ27H2P-NK87	DCMMV27H2P-N	DCMMZ27H2P-N	DCM27H2P-NNMBK	DCMZ27H2P-NNMBK52

* For Spacers; Order P/N 253-0343-008, 2 each

** Hardware Modifier not allowed on Non-Magnetic/Low Outgassing Versions; consult factory for more information

**For M-3 and other hardware options, see part number designator, page 7.

Plug

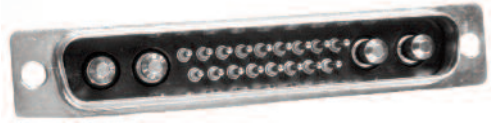

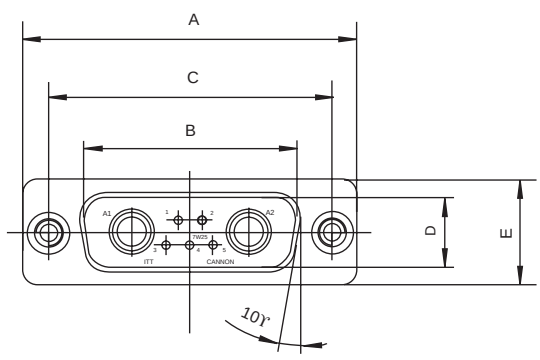

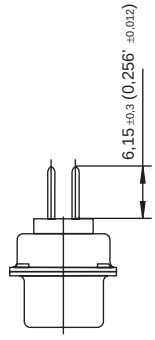

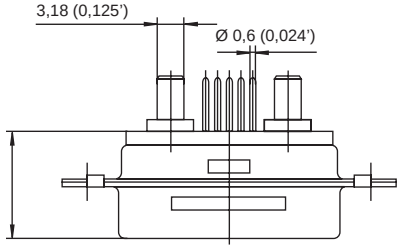

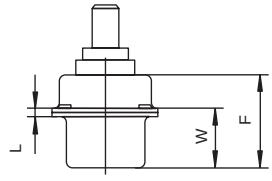

- For contact cavity arrangements, see page 61.
- For pcb hole pattern, see pages 92-94.
- For mounting methods, see pages 59-60.

Dimensions

Shell size	A ± 0,38 (.015)	B ± 0,13 (.005)	C ± 0,13 (.005)	D ± 0,13 (.005)	E ± 0,38 (.015)	F ± 0,25 (.010)	W ± 0,368 (.0145)	W ± 0,41 (.016)	L ± 0,25 (.010)
DE	30,81 (1.213)	16,92 (.665)	24,99 (.984)	8,36 (.329)	12,55 (.494)	10,72 (.422)	6,693 (.2635)	—	0,76 (.030)
DA	39,14 (1.541)	25,25 (.994)	33,32 (1.312)	8,36 (.329)	12,55 (.494)	10,72 (.422)	6,693 (.2635)	—	0,76 (.030)
DB	53,04 (2.088)	38,96 (1.534)	47,04 (1.852)	8,36 (.329)	12,55 (.494)	10,82 (.426)	—	6,84 (.269)	0,99 (.039)
DC	69,32 (2.729)	55,42 (2.182)	63,50 (2,500)	8,36 (.329)	12,55 (.494)	10,82 (.426)	—	6,84 (.269)	0,99 (.039)

Dimensions shown in mm

Specifications and dimensions subject to change

www.ittcannon.com

40 A High power straight PCB Plug, size DD

40 A High power straight inserted with straight contacts and standoff with 4-40 thread

		US		European		NON-MAGNETIC/LOW OUTGASSING***
Shell size	**Layout**	**P/N Industrial**	**P/N Military**	**P/N Class 3***	**P/N Class 2***	**P/N Base****
DD	24W7	DDM24H7P-NK87	DDMM24H7P-N	DDM-24H7P-OL4-K87	DDM-Z24H7P-OL4-A191-K87	DDM24H7P-NNMBK52
DD	36W4	DDM36H4P-NK87	DDMM36H4P-N	DDM-36H4P-OL4-K87	DDM-Z36H4P-OL4-A191-K87	DDM36H4P-NNMBK52
DD	43W2	DDM43H2P-NK87	DDMM43H2P-N	DDM-43H2P-OL4-K87	DDM-Z43H2P-OL4-A191-K87	DDM43H2P-NNMBK52
DD	47W1	DDM47H1P-NK87	DDMM47H1P-N	DDM-47H1P-OL4-K87	DDM-Z47H1P-OL4-A191-K87	DDM47H1P-NNMBK52

*For M-3 hardware and other hardware options, see part number designator, page 7.

**For spacers; order P/N 253-0343-008, two each per connector.

*** Hardware Modifier not allowed on Non-Magnetic/Low Outgassing Versions; consult factory for more information

Plug

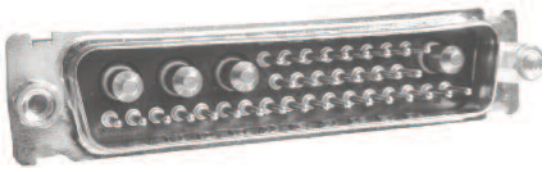

- For contact cavity arrangements, see page 61.
- For pcb hole pattern, see pages 92-94.
- For mounting methods, see pages 59-60.

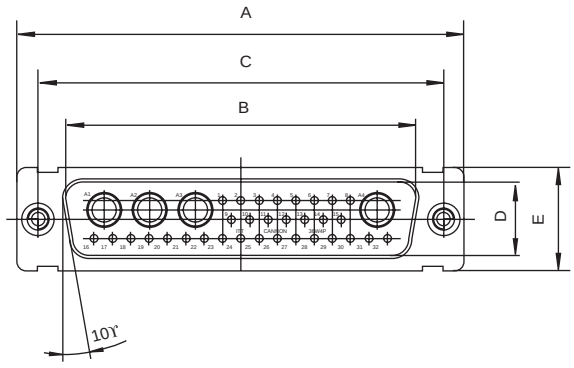

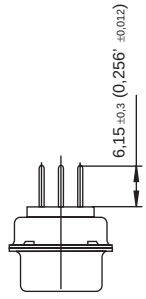

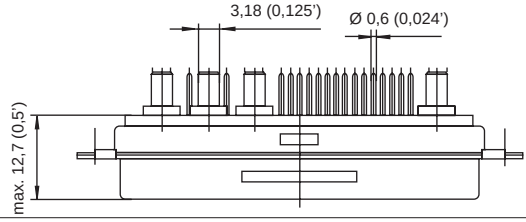

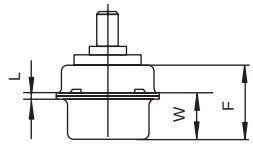

Dimensions

Shell size	A ± 0,38 (.015)	B ± 0,13 (.005)	C ± 0,13 (.005)	D ± 0,13 (.005)	E ± 0,38 (.015)	F ± 0,25 (.010)	W ± 0,41 (.010)	L ± 0,25 (.010)
DD	66,93 (2.635)	52,81 (2.079)	61,11 (2,406)	11,07 (.436)	15,37 (.605)	10,82 (.426)	6,84 (.264)	0,99 (.039)

40 A High power straight PCB Receptacle, sizes DE – DC

40 A High power inserted with straight contacts and standoff with UNC 4-40 thread

		INDUSTRIAL		MILITARY/HI-REL		NON-MAGNETIC**/LOW OUTGASSING***	
Shell size	**Layout**	**P/N without pushfit**	**P/N with pushfit**	**P/N without pushfit**	**P/N with pushfit**	**P/N with Cadmium Plating**	**P/N with Gold Plating**
DE	2W2	DEMV2H2S-NA197	DEMZ2H2S-NA197	DEMMV2H2S-N	DEMMZ2H2S-N	DEM2H2S-NNMB	DEM2H2S-NNMBK52
DE	2WK2	DEMV2HK2S-NA197	DEMZ2HK2S-NA197	DEMMV2HK2S-N	DEMMZ2HK2S-N	DEM2HK2S-NNMB	DEM2HK2S-NNMBK52
DE	5W1	DEMV5H1S-NA197	DEMZ5H1S-NA197	DEMMV5H1S-N	DEMMZ2HK2S-N	DEM5H1S-NNMB	DEM5H1S-NNMBK52
DA	7W2	DAMV7H2S-NA197	DAMZ7H2S-NA197	DAMMV7H2S-N	DAMMZ7H2S-N	DAM7H2S-NNMB	DAM7H2S-NNMBK52
DA	11W1	DAMV11H1S-NA197	DAMZ11H1S-NA197	DAMMV11H1S-N	DAMMZ11H1S-N	DAM11H1S-NNMB	DAM11H1S-NNMBK52
DA	3W3	DAMV3H3S-NA197	DAMZ3H3S-NA197	DAMMV3H3S-N	DAMMZ3H3S-N	DAM3H3S-NNMB	DAM3H3S-NNMBK52
DA	3WK3	DAMV3HK3S-NA197	DAMZ3HK3S-NA197	DAMMV3HK3S-N	DAMMZ3HK3S-N	DAM3HK3S-NNMB	DAM3HK3S-NNMBK52
DB	5W5	DBMV5H5S-NA197	DBMZ5H5S-NA197	DBMMV5H5S-N	DBMMZ5H5S-N	DBM5H5S-NNMB	DBM5H5S-NNMBK52
DB	9W4	DBMV9H4S-NA197	DBMZ9H4S-NA197	DBMMV9H4S-N	DBMMZ9H4S-N	DBM9H4S-NNMB	DBM9H4S-NNMBK52
DB	13W3	DBMV13H3S-NA197	DBMZ13H3S-NA197	DBMMV13H3S-N	DBMMZ13H3S-N	DBM13H3S-NNMB	DBM13H3S-NNMBK52
DB	17W2	DBMV17H2S-NA197	DBMZ17H2S-NA197	DBMMV17H2S-N	DBMMZ17H2S-N	DBM17H2S-NNMB	DBM17H2S-NNMBK52
DB	21W1	DBMV21H1S-NA197	DBMZ21H1S-NA197	DBMMV21H1S-N	DBMMZ21H1S-N	DBM21H1S-NNMB	DBM21H1S-NNMBK52
DC	8W8	DCMV8H8S-NA197	DCMZ8H8S-NA197	DCMMV8H8S-N	DCMMZ8H8S-N	DCM8H8S-NNMB	DCM8H8S-NNMBK52
DC	13W6	DCMV13H6S-NA197	DCMZ13H6S-NA197	DCMMV13H6S-N	DCMMZ13H6S-N	DCM13H6S-NNMB	DCM13H6S-NNMBK52
DC	17W5	DCMV17H5S-NA197	DCMZ17H5S-NA197	DCMMV17H5S-N	DCMMZ17H5S-N	DCM17H5S-NNMB	DCM17H5S-NNMBK52
DC	21WA4	DCMV21HA4S-NA197	DCMZ21HA4S-NA197	DCMMV21HA4S-N	DCMMZ21HA4S-N	DCM21HA4S-NNMB	DCM21HA4S-NNMBK52
DC	25W3	DCMV25H3S-NA197	DCMZ25H3S-NA197	DCMMV25H3S-N	DCMMZ25H3S-N	DCM25H3S-NNMB	DCM25H3S-NNMBK52
DC	27W2	DCMV27H2S-NA197	DCMZ27H2S-NA197	DCMMV27H2S-N	DCMMZ27H2S-N	DCM27H2S-NNMB	DCM27H2S-NNMBK52

*For M-3 hardware and other hardware options, see part number designator, page 7.

**For spacers; order P/N 23-0343-008, two each per connector.

*** Hardware Modifier not allowed on Non-Magnetic/Low Outgassing Versions; consult factory for more information.

Receptacle

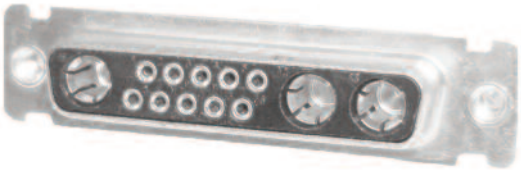

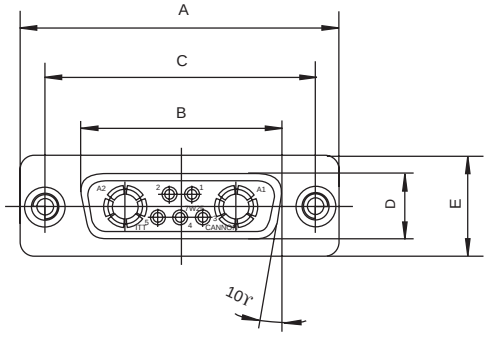

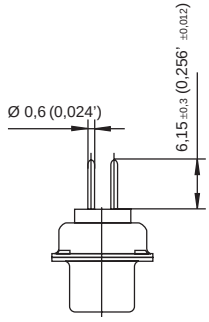

- For contact cavity arrangements, see page 62.
- For pcb hole pattern, see pages 95-97.
- For mounting methods, see pages 59-60.

.

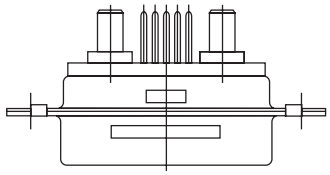

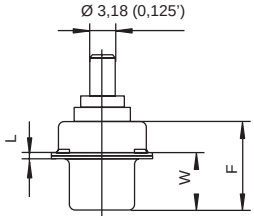

Dimensions

Shell size	A ± 0,38 (.015)	B ± 0,13 (.005)	C ± 0,13 (.005)	D ± 0,13 (.005)	E ± 0,38 (.015)	F ± 0,25 (.010)	W ± 0,38 (.015)	L ± 0,25 (.010)
DE	30,81 (1.213)	16,33 (.643)	24,99 (.984)	7,90 (.311)	12,55 (.494)	10,90 (.429)	6,94 (.273)	0,76 (.030)
DA	39,14 (1.541)	24,65 (.971)	33,32 (1.312)	7,90 (.311)	12,55 (.494)	10,90 (.429)	6,94 (.273)	0,76 (.030)
DB	53,04 (2.088)	38,38 (1.511)	47,04 (1.852)	7,90 (.311)	12,55 (.494)	10,90 (.429)	6,94 (.273)	0,76 (.030)
DC	69,32 (2.729)	54,84 (2.159)	63,50 (2,500)	7,90 (.311)	12,55 (.494)	10,90 (.429)	6,94 (.273)	0,76 (.030)

Dimensions shown in mm
Specifications and dimensions subject to change

www.ittcannon.com

40 A High power straight PCB Receptacle, size DD

40 A High power straight inserted with straight contacts and standoff with 4-40 thread

		US		European		NON-MAGNETIC/LOW OUTGASSING**
Shell size	**Layout**	**P/N Industrial**	**P/N Military**	**P/N Class 3**	**P/N Class 2**	**P/N Base***
DD	24W7	DDM24H7S-NA197	DDMM24H7S-N	DDM-24P7S-OL4-A197	DDM-Z24P7S-OL4-A191-A197	DDM24H7S-NNMBK52
DD	36W4	DDM36H4S-NA197	DDMM36H4S-N	DDM-36P4S-OL4-A197	DDM-Z36P4S-OL4-A191-A197	DDM36H4S-NNMBK52
DD	43W2	DDM43H2S-NA197	DDMM43H2S-N	DDM-43P2S-OL4-A197	DDM-Z43P2S-OL4-A191-A197	DDM43H2S-NNMBK52
DD	47W1	DDM47H1S-NA197	DDMM47H1S-N	DDM-47P1S-OL4-A197	DDM-Z47P1S-OL4-A191-A197	DDM47H1S-NNMBK52

*For M-3 hardware and other hardware options, see part number designator, page 7.
** For spacers; order P/N 23-0343-008, two each per connector.

***Hardware Modifier not allowed on Non-Magnetic/Low Outgassing Versions; consult factory for more information.

Receptacle



- For contact cavity arrangements, see page 62.
- For pcb hole pattern, see pages 95-97.
- For mounting methods, see pages 59-60.

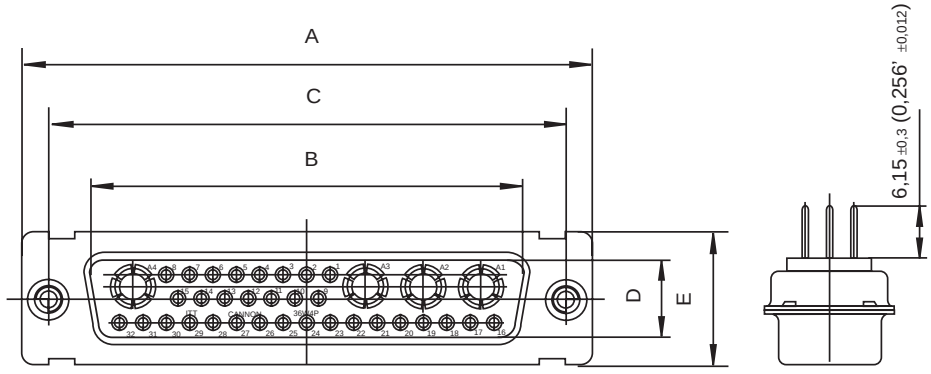

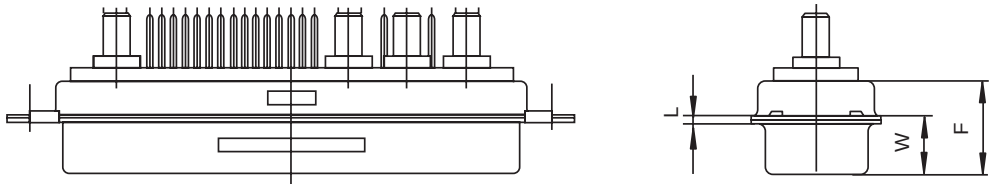

Dimensions

Shell size	A ± 0,38 (.015)	B ± 0,13 (.005)	C ± 0,13 (.005)	D ± 0,13 (.005)	E ± 0,38 (.015)	F ± 0,25 (.010)	W ± 0,38 (.015)	L ± 0,25 (.010)
DD	66,93 (2,635)	52,42 (2,406)	61,11 (2,406)	10,74 (.423)	15,37 (.605)	10,90 (.429)	6,94 (.273)	0,76 (.030)

40 A High Power straight-European solder Pins, sizes DE-DC

Part numbers with straight contacts

Shell size	Layout	with standoff M3	with standoff M3 with pushfit	standoff, M3 post and pushfit	with M3 clinch nut	with through hole 3,05 mm
DE	2W2	DEMT-2H2P-0L4-A191-K87	DEMQ-2H2P-0L4-A191-K87	DEMU-2H2P-0L4-A191-K87	DEMX-2H2P-0L4-A191-K87	DEM-2H2P-0L4-A191-K87
DE	2WK2	DEMT-2HK2P-0L4-A191-K87	DEMQ-2HK2P-0L4-A191-K87	DEMU-2HK2P-0L4-A191-K87	DEMX-2HK2P-0L4-A191-K87	DEM-2HK2P-0L4-A191-K87
DE	5W1	DEMT-5H1P-0L4-A191-K87	DEMQ-5H1P-0L4-A191-K87	DEMU-5H1P-0L4-A191-K87	DEMX-5H1P-0L4-A191-K87	DEM-5H1P-0L4-A191-K87
DA	7W2	DAMT-7H2P-0L4-A191-K87	DAMQ-7H2P-0L4-A191-K87	DAMU-7H2P-0L4-A191-K87	DAMX-7H2P-0L4-A191-K87	DAM-7H2P-0L4-A191-K87
DA	11W1	DAMT-11HP1P-0L4-A191-K87	DAMQ-11H1P-0L4-A191-K87	DAMU-11H1P-0L4-A191-K87	DAMX-11H1P-0L4-A191-K87	DAM-11H1P-0L4-A191-K87
DA	3W3	DAMT-3H3P-0L4-A191-K87	DAMQ-3H3P-0L4-A191-K87	DAMU-3H3P-0L4-A191-K87	DAMX-3H3P-0L4-A191-K87	DAM-3H3P-0L4-A191-K87
DA	3WK3	DAMT-3HK3P-0L4-A191-K87	DAMQ-3HK3P-0L4-A191-K87	DAMU-3PH3P-0L4-A191-K87	DAMX-3PH3P-0L4-A191-K87	DAM-3HK3P-0L4-A191-K87
DB	5W5	DBMT-5H5P-0L4-A191-K87	DBMQ-5H5P-0L4-A191-K87	DBMU-5H5P-10L4-A191-K87	DBMX-5H5P-0L4-A191-K87	DBM-5H5P-0L4-A191-K87
DB	9W4	DBMT-9H4P-0L4-A191-K87	DBMQ-9H4P-0L4-A191-K87	DBMU-9H4P-0L4-A191-K87	DBMX-9H4P-0L4-A191-K87	DBM-9H4P-0L4-A191-K87
DB	13W3	DBMT-13H3P-10L4-A191-K87	DBMQ-13H3P-0L4-A191-K87	DBMU-13H3P-0L4-A191-K87	DBMX-13H3P-0L4-A191-K87	DBM-13H3P-0L4-A191-K87
DB	17W2	DBMT-17HSP-0L4-A191-K87	DBMQ-17HSP-0L4-A191-K87	DBMU-17HSP-0L4-A191-K87	DBMX-17HSP-0L4-A191-K87	DBM-17HSP-0L4-A191-K87
DB	21W1	DBMT-21H1P-0L4-A191-K87	DBMQ-21H1P-0L4-A191-K87	DBMU-21H1P-0L4-A191-K87	DBMX-21H1P-0L4-A191-K87	DBM-21H1P-0L4-A191-K87
DC	W8	DCMT-8H8P-0L4-A191-K87	DCMQ-8H8P-0L4-A191-K87	DCMU-8H8P-0L4-A191-K87	DCMX-8H8P-0L4-A191-K87	DCM-8H8P-0L4-A191-K87
DC	13W6	DCMT-13H6P-0L4-A191-K87	DCMQ-13H6P-0L4-A191-K87	DCMU-13H6P-0L4-A191-K87	DCMX-13H6P-0L4-A191-K87	DCM-13H6P-0L4-A191-K87
DC	17W5	DCMT-17H5P-0L4-A191-K87	DCMQ-17H5P-0L4-A191-K87	DCMU-17H5P-0L4-A191-K87	DCMX-17H5P-0L4-A191-K87	DCM-17H5P-0L4-A191-K87
DC	21WA4	DCMT-21HA4P-0L4-A191-K87	DCMQ-21HA4P-0L4-A191-K87	DCMU-21HA4P-0L4-A191-K87	DCMX-21HA4P-0L4-A191-K87	DCM-21HA4P-0L4-A191-K87
DC	25W3	DCMT-25H3P-10L4-A191-K87	DCMQ-25H3P-0L4-A191-K87	DCMU-25H3P-0L4-A191-K87	DCMX-25H3P-0L4-A191-K87	DCM-25H3P-0L4-A191-K87
DC	27W2	DCMT-27H2P-0L4-A191--K87	DCMQ-27H2P-0L4-A191-K87	DCMU-27H2P-0L4-A191-K87	DCMX-27H2P-0L4-A191-K87	DCM-27H2-0L4-A191-K87

For performance class 1 replace A191 with A190.
For performance class 3 delete A191.

For 4-40 UNC thread standoff with pushfit replace Q with Z.
For captive nut 4-40 NC replace X with E.

Pin

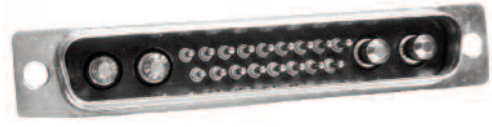

- For contact cavity arrangements, see page 61.
- For pcb hole pattern, see pages 92-94.
- For mounting methods, see pages 59-60.

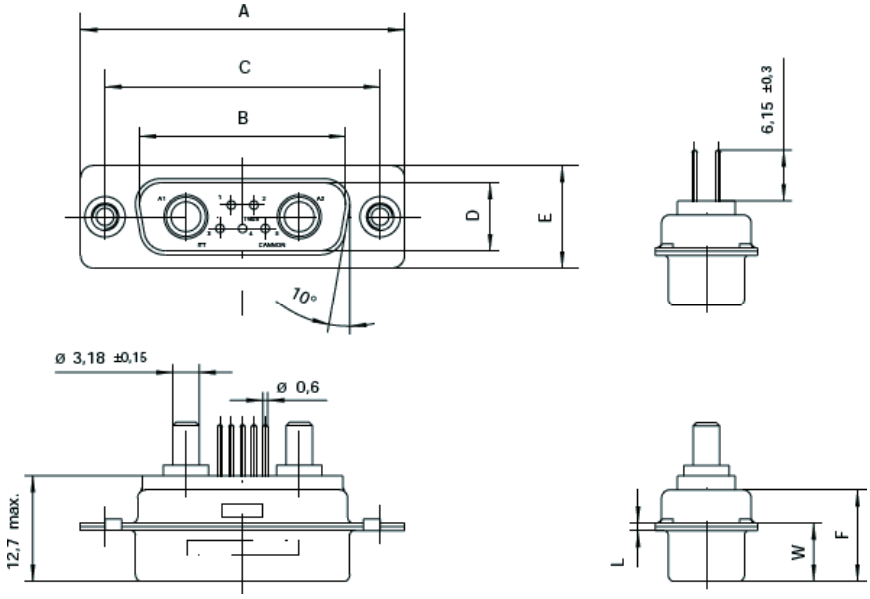

Dimensions

Shell size	A ± 0,38 (.015)	B ± 0,13 (.005)	C ± 0,13 (.005)	D ± 0,13 (.005)	E ± 0,38 (.015)	F ± 0,25 (.010)	W ± 0,2 (.008)	L ± 0,40 (.016)
DE	30,81 (1.213)	16,90 (.665)	25,0 (.984)	8,35 (.329)	12,55 (.494)	10,70 (.421)	6,70 (.264)	0,8 (.031)
DA	39,15 (1.541)	24,25 (.994)	33,3 (1.311)	8,35 (.329)	12,55 (.494)	10,70 (.421)	6,70 (.264)	0,8 (.031)
DB	53,05 (2.088)	38,95 (1.533)	47,05 (1.852)	8,35 (.329)	12,55 (.494)	10,80 (.425)	6,80 (.268)	0,9 (.031)
DC	69,3 (2.089)	55,4 (2.181)	63,50 (2,500)	8,35 (.329)	12,55 (.494)	10,80 (.425)	6,80 (.268)	0,9 (.031)

Dimensions shown in mm
Specifications and dimensions subject to change

40 A High Power straight-European solder Socket, sizes DE-DC

Part numbers with straight contacts

Shell size	Layout	with standoff M3	with standoff M3 with pushfit	standoff, M3 post and pushfit	with M3 clinch nut	with through hole 3,05 mm
DE	2W2	DEMT-2H2S-0L4-A191- A197	DEMQ-2H2S-0L4-A191-A197	DEMU-2H2S-0L4-A191-A197	DEMX-2H2S-0L4-A191-A197	DEM-2H2S-0L4-A191-A197
DE	2WK2	DEMT-2HK3S-0L4-A191-A197	DAMQ-2HK3S-0L4-A191-A197	DAMU-2PH3S-0L4-A191-A197	DAMX-2PH3S-0L4-A191-A197	DAM-2HK3S-0L4-A191-A197
DE	5W1	DEMT-5H1S-0L4-A191- A197	DEMQ-5H1S-0L4-A191-A197	DEMU-5H1S-0L4-A191-A197	DEMX-5H1S-0L4-A191-A197	DEM-5H1S-0L4-A191-A197
DA	7W2	DAMT-7H2S-0L4-A191-A197	DAMQ-7H2S-0L4-A191-A197	DAMU-7H2S-0L4-A191-A197	DAMX-7H2S-0L4-A191-A197	DAM-7H2S-0L4-A191-A197
DA	11W1	DAMT-11H1S-0L4-A191-A197	DAMQ-11H1S-0L4-A191-A197	DAMU-11H1S-0L4-A191-A197	DAMX-11H1S-0L4-A191-KA197	DAM-11H1S-0L4-A191-A197
DA	3W3	DAMT-3H3S-0L4-A191-A197	DAMQ-3H3S-0L4-A191-A197	DAMU-3H3S-0L4-A191-A197	DAMX-3H3S-0L4-A191-A197	DAM-3H3S-0L4-A191-A197
DA	3WK3	DAMT-3HK3S-0L4-A191-A197	DAMQ-3HK3S-0L4-A191-A197	DAMU-3PH3S-0L4-A191-A197	DAMX-3PH3S-0L4-A191-A197	DAM-3HK3S-0L4-A191-A197
DB	5W5	DBMT-5H5S-0L4-A191-A197	DBMQ-5H5S-0L4-A191-A197	DBMU-5H5S-10L4-A191-A197	DBMX-5H5S-0L4-A191-A197	DBM-5H5S-0L4-A191-A197
DB	9W4	DBMT-9H4S-0L4-A191-A197	DBMQ-9H4S-0L4-A191-A197	DBMU-9H4S-0L4-A191-A197	DBMX-9H4S-0L4-A191-A197	DBM-9H4S-0L4-A191-A197
DB	13W3	DBMT-13H3S-10L4-A191-A197	DBMQ-13H3S-0L4-A191-A197	DBMU-13H3S-0L4-A191-A197	DBMX-13H3S-0L4-A191-A197	DBM-13H3S-0L4-A191-A197
DB	17W2	DBMT-17H2S-0L4-A191-A197	DBMQ-17H2S-0L4-A191-A197	DBMU-17H2S-0L4-A191-A197	DBMX-17H2S-0L4-A191-A197	DBM-17H2S-0L4-A191-A197
DB	21W1	DBMT-21H1S-0L4-A191-A197	DBMQ-21H1S-0L4-A191-A197	DBMU-21H1S-0L4-A191-A197	DBMX-21H1S-0L4-A191-A197	DBM-21H1S-0L4-A191-A197
DC	W8	DCMT-8H8S-0L4-A191-A197	DCMQ-8H8S-0L4-A191-A197	DCMU-8H8S-0L4-A191-A197	DCMX-8H8S-0L4-A191-A197	DCM-8H8S-0L4-A191-A197
DC	13W6	DCMT-13H6S-0L4-A191-A197	DCMQ-13H6S-0L4-A191-A197	DCMU-13H6S-0L4-A191-A197	DCMX-13H6S-0L4-A191-A197	DCM-13H6S-0L4-A191-A197
DC	17W5	DCMT-17H5S-0L4-A191-A197	DCMQ-17H5S-0L4-A191-A197	DCMU-17H5S-0L4-A191-A197	DCMX-17H5S-0L4-A191-A197	DCM-17H5S-0L4-A191-A197
DC	21WA4	DCMT-21HA4S-0L4-A191-A197	DCMQ-21HA4S-0L4-A191-A197	DCMU-21HA4S-0L4-A191-A197	DCMX-21HA4S-0L4-A191-A197	DCM-21HA4S-0L4-A191-A197
DC	25W3	DCMT-25H3S-10L4-A191-A197	DCMQ-25H3S-0L4-A191-A197	DCMU-25H3S-0L4-A191-A197	DCMX-25H3S-0L4-A191-A197	DCM-25H3S-0L4-A191-A197
DC	27W2	DCMT-27H2S-0L4-A191-A197	DCMQ-27H2S-0L4-A191-A197	DCMU-27H2S-0L4-A191-A197	DCMX-27H2S-0L4-A191-A197	DCM-27H2S-0L4-A191-A197

For performance class 1 replace A191 with A190.
For performance class 3 delete A191.

For 4-40 UNC thread standoff with pushfit replace Q with Z.
For captive nut 4-40 NC replace X with E.

Socket

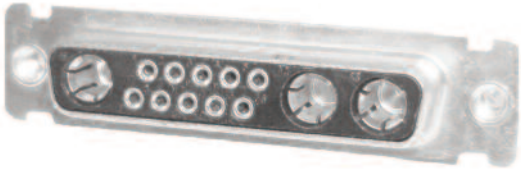

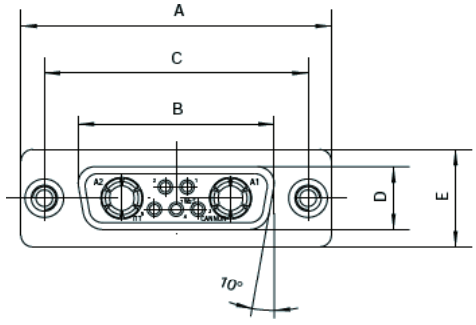

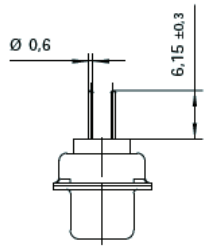

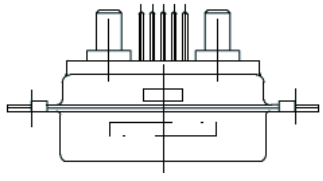

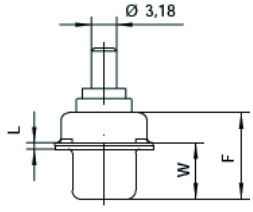

- For contact cavity arrangements, see page 62.
- For pcb hole pattern, see pages 95-97.
- For mounting methods, see pages 59-60.

Dimensions

Shell size	A ± 0,38 (.015)	B ± 0,13 (.005)	C ± 0,13 (.005)	D ± 0,13 (.005)	E ± 0,38 (.015)	F ± 0,25 (.010)	L ± 0,2 (008)	W ± 0,40 (.016)
DE	30,8 (1.213)	16,35 (.644)	25 (.984)	7,9 (.311)	12,55 (.494)	10,90 (.429)	0,8 (.031)	6,95 (.274)
DA	39,15 (1.541)	24,65 (.970)	33,3 (1.311)	7,9 (.311)	12,55 (.494)	10,90 (.429)	0,8 (.031)	6,95 (.274)
DB	53,05 (2.089)	38,4 (1.512)	47,05 (1.852)	7,9 (.311)	12,55 (.494)	10,90 (.429)	0,8 (.031)	6,95 (.274)
DC	69,3 (2.089)	54,85 (2.159)	63,50 (2,500)	7,9 (.311)	12,55 (.494)	10,90 (.429)	0,8 (.031)	6,95 (.274)

40 A High Power Plug, Pressfit Termination

Plug

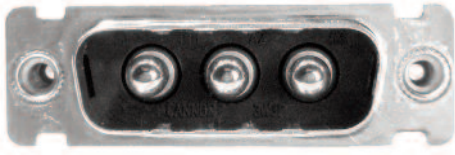

Part Numbers

Boardlock 4-40 UNC	Boardlock M3	Stand-off 4-40	Stand-off M3
DAME3W3P-PO-161	DAMX-3W3P-PO-161	DAME-3W3P-PO-183	DAMX-3W3P-PO-183
DAME3WK3P-PO-161	DAMX-3WK3P-PO-161	DAME-3WK3P-PO-183	DAMX-3WK3P-PO-183
DBME5W5P-PO-161	DBMX-5W5P-PO-161	DBME-5W5P-PO-183	DBMX-5W5P-PO-183
DCME8W8P-PO-161	DCMX-8W8P-PO-161	DCME-8W8P-PO-183	DCMX-8W8P-PO-183

- For contact cavity arrangements, see page 61.
- For pcb hole pattern, see pages 82-84.
- For mounting methods, see pages 59-60.

Electrical Data

Insulation resistance
≈ 1 x 10^{10} W / 100 V

Contact resistance
1 mW

Dielectric Withstanding Voltage
1000 VAC (sea level)

Current Load

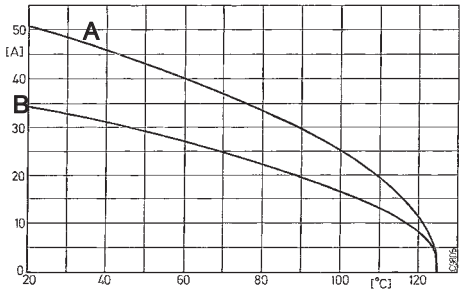

A – Multilayer 6 x 35 µm x 4,5 mm
B – Double layer 2 x 35 µm x 4,5 mm

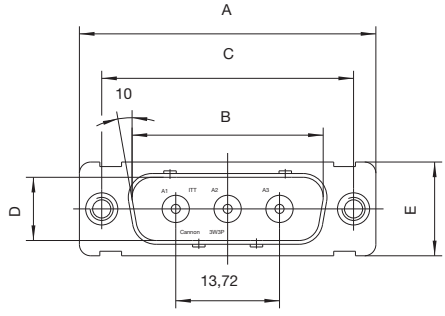

3W3

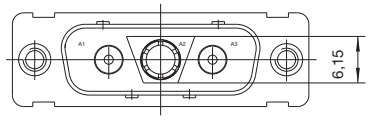

3WK3

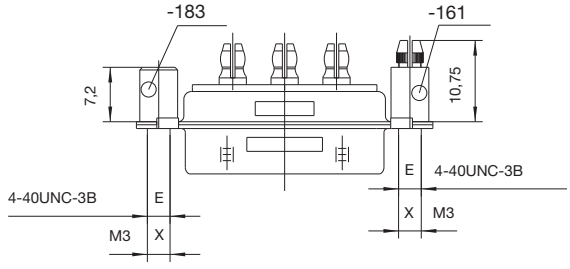

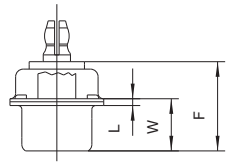

Dimensions

Shell size	A ± 0,38 (.015)	B ± 0,13 (.005)	C ± 0,13 (.005)	D ± 0,13 (.005)	E ± 0,38 (.015)	F ± 0,25 (.010)	W ± 0,38 (.0145)	W ± 0,41 (.016)	L ± 0,25 (.010)
DA	39,14 (1.541)	25,25 (.994)	33,32 (1.312)	8,36 (.329)	12,55 (.494)	10,72 (.422)	6,693 (.2635)	—	0,76 (.030)
DB	53,04 (2.088)	38,96 (1.534)	47,04 (1.852)	8,36 (.329)	12,55 (.494)	10,82 (.426)	—	6,84 (.269)	0,99 (.039)
DC	69,32 (2.729)	55,42 (2.182)	63,50 (2,500)	8,36 (.329)	12,55 (.494)	10,82 (.426)	—	6,84 (.269)	0,99 (.039)

Dimensions shown in mm
Specifications and dimensions subject to change

www.ittcannon.com

40 A High Power Receptacle, Pressfit Termination

Part Numbers

Boardlock 4-40 UNC	Boardlock M3	Stand-off 4-40	Stand-off M3
DEME3W3S-PO-161	DEMX-3W3S-PO-161	DEME-3W3S-PO-183	DEMX-3W3S-PO-183
DAME3WK3S-PO-161	DAMX-3WK3S-PO-161	DAME-3WK3S-PO-183	DAMX-3WK3S-PO-183
DBME5W5S-PO-161	DBMX-5W5S-PO-161	DBME-5W5S-PO-183	DBMX-5W5S-PO-183
DCME8W8S-PO-161	DCMX-8W8S-PO-161	DCME-8W8S-PO-183	DCMX-8W8S-PO-183

Receptacle



- For contact cavity arrangements, see page 62.
- For pcb hole pattern, see pages 85-87.
- For mounting methods, see page 59-60.

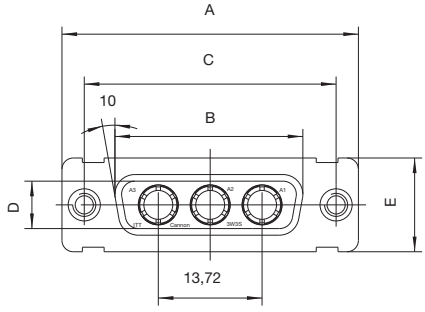

3W3

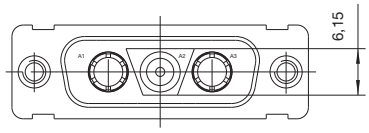

3WK3

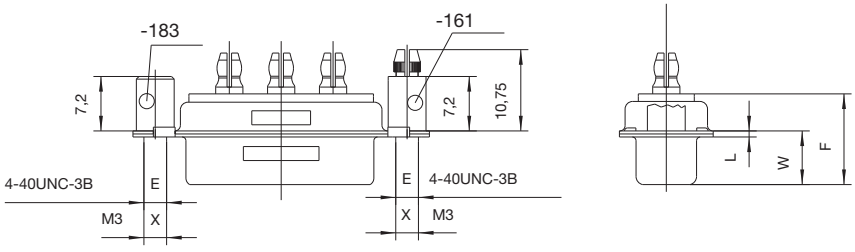

Dimensions

Shell size	A ± 0,38 (.015)	B ± 0,13 (.005)	C ± 0,13 (.005)	D ± 0,13 (.005)	E ± 0,38 (.015)	F ± 0,25 (.010)	W ± 0,38 (.015)	L ± 0,25 (.010)
DA	39,15 (1.541)	24,66 (.971)	33,32 (1.312)	7,90 (.311)	12,55 (.494)	10,90 (.429)	6,94 (.273)	6,76 (.030)
DB	53,04 (2.088)	38,48 (1.511)	47,04 (1.852)	7,90 (.311)	12,55 (.494)	10,90 (.429)	6,94 (.273)	6,76 (.030)
DC	69,32 (2.729)	54,84 (2.159)	63,50 (2.500)	7,90 (.311)	12,55 (.494)	10,90 (.429)	6,94 (.273)	6,76 (.030)

Plug, Solder cup, sizes DE – DC, with empty size 8 cavities

Plug

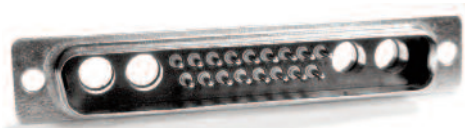

- For contact cavity arrangements, see page 61.
- For mounting methods, see page 59-60.

Empty size 8 contact cavities with solder pot termination

Shell size	Layout	INDUSTRIAL P/N with through hole	MILITARY/HI-REL P/N with through hole	NON-MAGNETIC/LOW OUTGASSING** P/N with through hole
DE	2W2	DEM2W2PK87	DEMM2W2P	DEM2W2PNMBK52
DE	2WK2	DEM2WK2PK87	DEMM2WK2P	DEM2WK2PNMBK52
DE	5W1	DEM5W1PK87	DEMM5W1P	DEM5W1PNMBK52
DA	7W2	DAM7W2PK87	DAMM7W2P	DAM7W2PNMBK52
DA	11W1	DAM11W1PK87	DAMM11W1P	DAM11W1PNMBK52
DA	3W3	DAM3W3PK87	DAMM3W3P	DAM3W3PNMBK52
DA	3WK3	DAM3WK3PK87	DAMM3WK3P	DAM3WK3PNMBK52
DB	5W5	DBM5W5PK87	DBMM5W5P	DBM5W5PNMBK52
DB	9W4	DBM9W4PK87	DBMM9W4P	DBM9W4PNMBK52
DB	13W3	DBM13W3PK87	DBMM13W3P	DBM13W3PNMBK52
DB	17W2	DBM17W2PK87	DBMM17W2P	DBM17W2PNMBK52
DB	21W1	DBM21W1PK87	DBMM21W1P	DBM21W1PNMBK52
DC	8W8	DCM8W8PK87	DCMM8W8P	DCM8W8PNMBK52
DC	13W6	DCM13W6PK87	DCMM13W6P	DCM13W6PNMBK52
DC	17W5	DCM17W5PK87	DCMM17W5P	DCM17W5PNMBK52
DC	21WA4	DCM21WA4PK87	DCMM21WA4P	DCM21WA4PNMBK52
DC	25W3	DCM25W3PK87	DCMM25W3P	DCM25W3PNMBK52
DC	27W2	DCM27W2PK87	DCMM27W2P	DCM27W2PNMBK52

*For clinch nut 4-40 UNC thread add "E", for float mount add "Y" after D*M designation (Ex. DCMME27W2P, DGMY27W2PK87) 2W2/2WK2, 3W3/3WK3 (keyed) 5W5 and 8W8 without signal contacts.

** Hardware Modifier not allowed on Non-Magnetic/Low Outgassing Versions; consult factory for more information

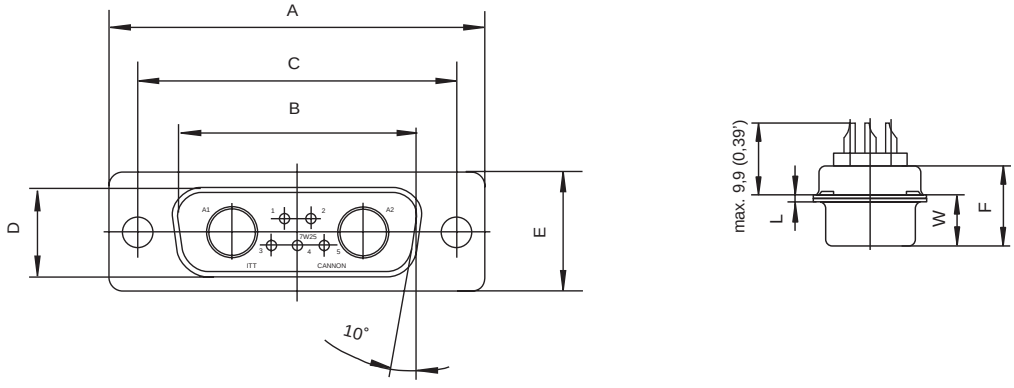

Dimensions

Shell size	A ± 0,38 (.015)	B ± 0,13 (.005)	C ± 0,13 (.005)	D ± 0,13 (.005)	E ± 0,38 (.015)	F ± 0,25 (.010)	W ± 0,368 (.0145)	W ± 0,41 (.016)	K ± 0,317 (.0125)	K ± 0,25 (.010)	L ± 0,25 (.010)
DE	30,81 (1.213)	16,92 (.666)	24,99 (.984)	8,36 (.329)	12,55 (.494)	10,72 (.422)	6,693 (.2635)	—	1,206 (.0475)	—	0,76 (.030)
DA	39,14 (1.541)	25,25 (.994)	33,32 (1.312)	8,36 (.329)	12,55 (.494)	10,72 (.422)	6,693 (.2635)	—	1,206 (.0475)	—	0,76 (.030)
DB	53,04 (2.088)	38,96 (1.534)	47,04 (1.852)	8,36 (.329)	12,55 (.494)	10,82 (.426)	—	6,84 (.269)	—	1,52 (.060)	0,99 (.039)
DC	69,32 (2.729)	55,42 (2.182)	63,50 (2,500)	8,36 (.329)	12,55 (.494)	10,82 (.426)	—	6,84 (.269)	—	1,52 (.060)	0,99 (.039)

Dimensions shown in mm
Specifications and dimensions subject to change

Receptacle, Solder cup, sizes DE – DC, with empty size 8 cavities

Receptacle

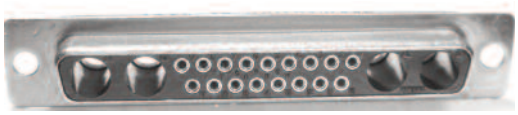

- For contact cavity arrangements, see page 62.
- For mounting methods, see pages 59-60.

Empty size 8 contact cavities with solder pot termination

Shell size	Layout	INDUSTRIAL P/N with through hole	MILITARY/HI-REL P/N with through hole	NON-MAGNETIC/LOW OUTGASSING** P/N with through hole
DE	2W2	DEM2W2SA197	DEMM2W2S	DEM2W2SNMBK52
DE	2WK2	DEM2WK2SA197	DEMM2WK2S	DEM2WK2SNMBK52
DE	5W1	DEM5W1SA197	DEMM5W1S	DEM5W1SNMBK52
DA	7W2	DAM7W2SA197	DAMM7W2S	DAM7W2SNMBK52
DA	11W1	DAM11W1SA197	DAMM11W1S	DAM11W1SNMBK52
DA	3W3	DAM3W3SA197	DAMM3W3S	DAM3W3SNMBK52
DA	3WK3	DAM3WK3SA197	DAMM3WK3S	DAM3WK3SNMBK52
DB	5W5	DBM5W5SA197	DBMM5W5S	DBM5W5SNMBK52
DB	9W4	DBM9W4SA197	DBMM9W4S	DBM9W4SNMBK52
DB	13W3	DBM13W3SA197	DBMM13W3S	DBM13W3SNMBK52
DB	17W2	DBM17W2SA197	DBMM17W2S	DBM17W2SNMBK52
DB	21W1	DBM21W1SA197	DBMM21W1S	DBM21W1SNMBK52
DC	8W8	DCM8W8SA197	DCMM8W8S	DCM8W8SNMBK52
DC	13W6	DCM13W6SA197	DCMM13W6S	DCM13W6SNMBK52
DC	17W5	DCM17W5SA197	DCMM17W5S	DCM17W5SNMBK52
DC	21WA4	DCM21WA4SA197	DCMM21WA4S	DCM21WA4SNMBK52
DC	25W3	DCM25W3SA197	DCMM25W3S	DCM25W3SNMBK52
DC	27W2	DCM27W2SA197	DCMM27W2S	DCM27W2SNMBK52

*For clinch nut 4-40 UNC thread add "E", for float mount add "Y" after D*M designation (Ex. DCMME27W2P, DGMY27W2PK87) 2W2/2WK2, 3W3/3WK3 (keyed) 5W5 and 8W8 without signal contacts.
** Hardware Modifier not allowed on Non-Magnetic/Low Outgassing Versions; consult factory for more information

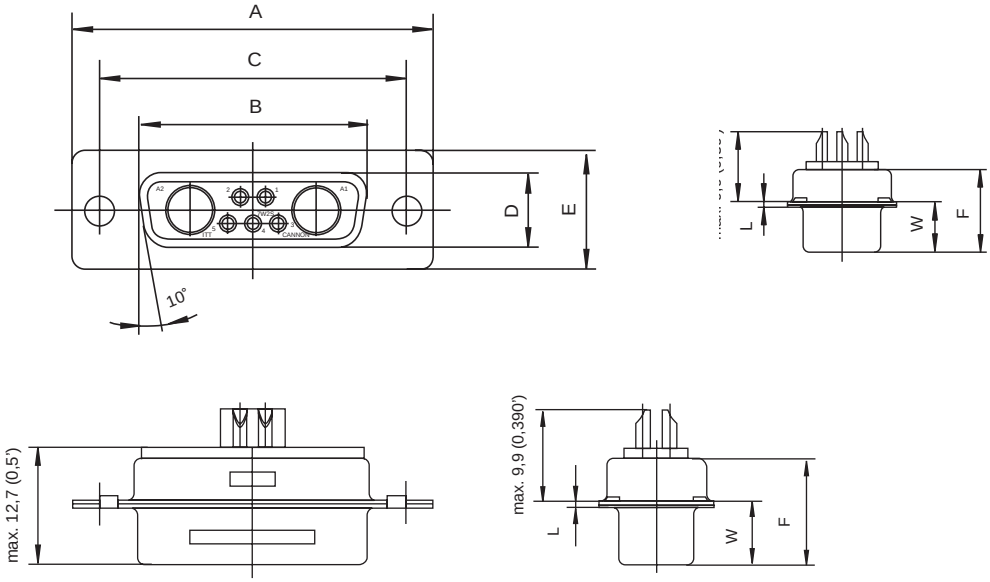

Dimensions

Shell size	A ± 0,38 (.015)	B ± 0,13 (.005)	C ± 0,13 (.005)	D ± 0,13 (.005)	E ± 0,38 (.015)	F ± 0,25 (.010)	W ± 0,38 (.015)	K ± 0,317 (.0125)	L ± 0,25 (.010)
DE	30,81 (1.213)	16,33 (.643)	24,99 (.984)	7,90 (.311)	12,55 (.494)	10,90 (.429)	6,94 (.273)	1,206 (.0475)	0,76 (.030)
DA	39,14 (1.541)	24,65 (.971)	33,32 (1.312)	7,90 (.311)	12,55 (.494)	10,90 (.429)	6,94 (.273)	1,206 (.0475)	0,76 (.030)
DB	53,04 (2.088)	38,38 (1.511)	47,04 (1.852)	7,90 (.311)	12,55 (.494)	10,90 (.429)	6,94 (.273)	1,206 (.0475)	0,76 (.030)
DC	69,32 (2.729)	54,84 (2.159)	63,50 (2,500)	7,90 (.311)	12,55 (.494)	10,90 (.429)	6,94 (.273)	1,206 (.0475)	0,76 (.030)

Plug

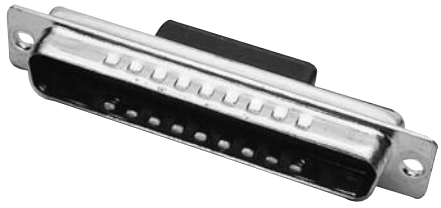

- For contact cavity arrangements, see page 61.
- For crimp contacts size 20, see pages 39-40.
- For mounting methods, see pages 59-60.

Plug, Crimp cable connectors without contacts, sizes DE– DD

Shell size	Layout	INDUSTRIAL Part number	MILITARY/HI-REL Part number	NON-MAGNETIC/LOW OUTGASSING** Part number
DE	2W2	DEA2W2PK87FO	DEA2W2PFO	DEA2W2PNMBK47FO
DE	2WK2	DEA2WK2PK87FO	DEA2WK2PFO	DEA2WK2PNMBK47FO
DA	7W2	DAA7W2PK87FO	DAA7W2PFO	DAA7W2PNMBK47FO
DA	11W1	DAA11W1PK87FO	DAA11W1PFO	DAA11W1PNMBK47FO
DA	3W3	DAA3W3PK87FO	DAA3W3PFO	DAA3W3PNMBK47FO
DA	3WK3	DAA3WK3PK87FO	DAA3WK3PFO	DAA3WK3PNMBK47FO
DB	5W5	DBA5W5PK87FO	DBA5W5PFO	DBA5W5PNMBK47FO
DB	9W4	DBA9W4PK87FO	DBA9W4PFO	DBA9W4PNMBK47FO
DB	13W3	DBA13W3PK87FO	DBA13W3PFO	DBA13W3PNMBK47FO
DB	17W2	DBA17W2PK87FO	DBA17W2PFO	DBA17W2PNMBK47FO
DB	21W1	DBA21W1PK87FO	DBA21W1PFO	DBA21W1PNMBK47FO
DC	8W8	DCA8W8PK87FO	DCA8W8PFO	DCA8W8PNMBK47FO
DC	21WA4	DCA21WA4PK87FO	DCA21WA4PFO	DCA21WA4PNMBK47FO
DD	24W7	DDA24W7PK87FO	DDA24W7PFO	DDA24W7PNMBK47FO
DD	36W4	DDA36W4PK87FO	DDA36W4PFO	DDA36W4NMBK47FO
DD	43W2	DDA43W2PK87FO	DDA43W2PFO	DDA43W2PNMBK47FO

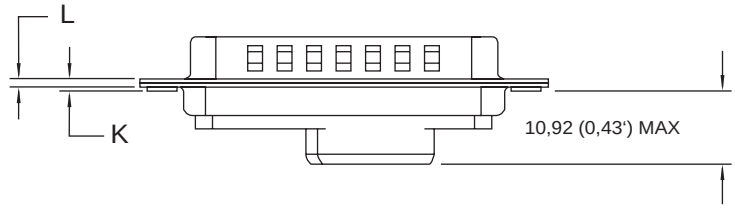

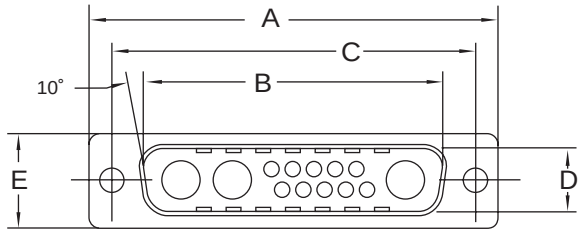

Dimensions

Shell size	A ± 0,38 (.015)	B ± 0,13 (.005)	C ± 0,13 (.005)	D ± 0,13 (.005)	E ± 0,38 (.015)	F ± 0,25 (.010)	W ± 0,368 (.0145)	W ± 0,41 (.016)	K ± 0,317 (.0125)	K ± 0,25 (.010)	L ± 0,25 (.010)
DE	30,81 (1.213)	16,92 (.666)	24,99 (.984)	8,36 (.329)	12,55 (.494)	10,72 (.422)	6,693 (.2635)	—	1,206 (.0475)	—	0,76 (.030)
DA	39,14 (1.541)	25,25 (.994)	33,32 (1.312)	8,36 (.329)	12,55 (.494)	10,72 (.422)	6,693 (.2635)	—	1,206 (.0475)	—	0,76 (.030)
DB	53,04 (2.088)	38,96 (1.534)	47,04 (1.852)	8,36 (.329)	12,55 (.494)	10,82 (.426)	—	6,84 (.269)	—	1,52 (.060)	0,99 (.039)
DC	69,32 (2.729)	55,42 (2.182)	63,50 (2,500)	8,36 (.329)	12,55 (.494)	10,82 (.426)	—	6,84 (.269)	—	1,52 (.060)	0,99 (.039)
DD	66,93 (2.635)	52,81 (2.079)	61,11 (2,406)	11,07 (.436)	15,37 (.605)	10,82 (.426)	—	6,84 (.269)	—	1,52 (.060)	0,99 (.039)

Dimensions shown in mm
Specifications and dimensions subject to change

Receptacle



Receptacle, Crimp cable connectors without contacts, sizes DE-DD

Shell size	Layout	INDUSTRIAL Part number	MILITARY/HI-REL Part number	NON-MAGNETIC/LOW OUTGASSING** Part number
DE	2W2	DEA2W2SA197FO	DEA2W2SFO	DEA2W2SNMBK47FO
DE	2WK2	DEA2WK2SA197FO	DEA2WK2SFO	DEA2WK2SNMBK47FO
DA	7W2	DAA7W2SA197FO	DAA7W2SFO	DAA7W2SNMBK47FO
DA	11W1	DAA11W1SA197FO	DAA11W1SFO	DAA11W1SNMBK47FO
DA	3W3	DAA3W3SA197FO	DAA3W3SFO	DAA3W3SNMBK47FO
DA	3WK3	DAA3WK3SA197FO	DAA3WK3SFO	DAA3WK3SNMBK47FO
DB	5W5	DBA5W5SA197FO	DBA5W5SFO	DBA5W5SNMBK47FO
DB	9W4	DBA9W4SA197FO	DBA9W4SFO	DBA9W4SNMBK47FO
DB	13W3	DBA13W3SA197FO	DBA13W3SFO	DBA13W3SNMBK47FO
DB	17W2	DBA17W2SA197FO	DBA17W2SFO	DBA17W2SNMBK47FO
DB	21W1	DBA21W1SA197FO	DBA21W1SFO	DBA21W1SNMBK47FO
DC	8W8	DCA8W8SA197FO	DCA8W8SFO	DCA8W8SNMBK47FO
DC	21WA4	DCA21WA4SA197FO	DCA21WA4SFO	DCA21WA4SNMBK47FO
DD	24W7	DDA24W7SA197FO	DDA24W7SFO	DDA24W7SNMBK47FO
DD	36W4	DDA36W4SA197FO	DDA36W4SFO	DDA36W4SNMBK47FO
DD	43W2	DDA243W2SA197FO	DDA43W2S7FO	DDA43W2SNMBK47FO

- For contact cavity arrangements, see page 62
- For crimp contacts size 20, see page 39-40.
- For mounting methods, see pages 59-60.

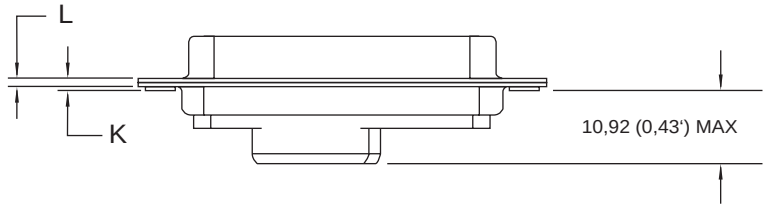

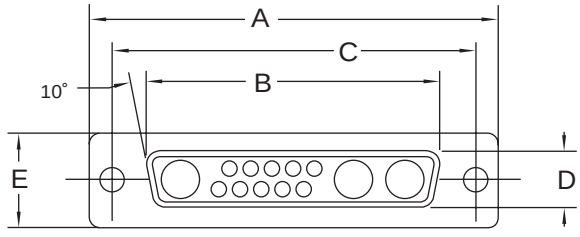

Dimensions

Shell size	A ± 0,38 (.015)	B ± 0,13 (.005)	C ± 0,13 (.005)	D ± 0,13 (.005)	E ± 0,38 (.015)	F ± 0,25 (.010)	W ± 0,38 (.015)	K ± 0,317 (.0125)	L ± 0,25 (.010)
DE	30,81 (1.213)	16,33 (.643)	24,99 (.984)	7,90 (.311)	12,55 (.494)	10,90 (.429)	6,94 (.273)	1,206 (.0475)	0,76 (.030)
DA	39,14 (1.541)	24,65 (.971)	33,32 (1.312)	7,90 (.311)	12,55 (.494)	10,90 (.429)	6,94 (.273)	1,206 (.0475)	0,76 (.030)
DB	53,04 (2.088)	38,38 (1.511)	47,04 (1.852)	7,90 (.311)	12,55 (.494)	10,90 (.429)	6,94 (.273)	1,206 (.0475)	0,76 (.030)
DC	69,32 (2.729)	54,84 (2.159)	63,50 (2,500)	7,90 (.311)	12,55 (.494)	10,90 (.429)	6,94 (.273)	1,206 (.0475)	0,76 (.030)
DD	66,93 (2.635)	52,42 (2.064)	61,11 (2,406)	10,74 (.423)	15,37 (.494)	10,90 (.429)	6,94 (.273)	1,206 (.0475)	0,76 (.030)

ITT

Dimensions shown in mm
Specifications and dimensions subject to change

Crimp Contacts Size 20

Machined Contacts

	Pin		Socket	
Contact size AWG	26 – 30	20 – 24	26 – 30	20 – 24
Gold Flash (Performance class 3)	330-5291-004	330-5291-000	031-1007-004	031-1007-000
50 µn Au (Performance class 2)	330-5291-050	980-0009-472	031-1007-048	980-0009-471

AWG size		A ± 0,05	B ± 0,05	C max.
20 – 24	Pin	1,7 (0.067)	1,0 (0.039)	14,2 (0.559)
	Socket	1,7 (0.067)	1,0 (0.039)	13,7 (0.539)
26 – 30	Pin	1,7 (0.067)	0,6 (0.039)	14,2 (0.559)
	Socket	1,7 (0.067)	0,6 (0.039)	13,7 (0.539)

Pin

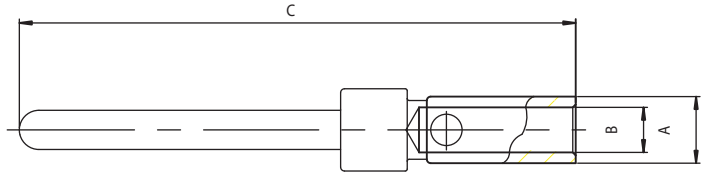

Socket

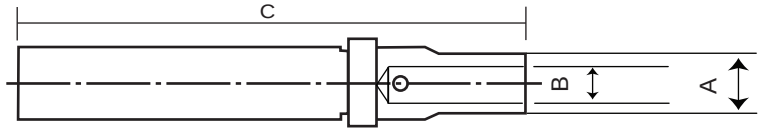

MIL-C-39029 Cross Reference List

Contact size AWG Number	M39029	/ 24308-Style*	Cannon Part
20 /	/ 63-368	/ Socket	980-0009-471
20 /	/ 64-369	/ Pin	980-0009-472

* Superseded by AS39029

Crimp Contacts Size 20 for D*A Connectors

Contacts on Reels
(5000 pcs / reel)

Stamped contacts with insulation support are supplied on reels of 5000 for use with semi-automatic strip and crimp machines. Two sizes are available to accommodate wire ranges 20 – 26 AWG.

Pin Contacts



Socket Contacts



Performance
Gold flash over Nickel (Performance class 3)
30 µ in Au/Nickel (Performance class 2)

Part Numbers

AWG 24 - 26	AWG 20 - 24
980-2000-925	980-2000-924
980-2000-946	980-2000-945

Part Numbers

AWG 24 - 26	AWG 20 - 24
980-2000-926	980-2000-923
980-2000-944	980-2000-943

* Mating Cycles

Pin Contacts

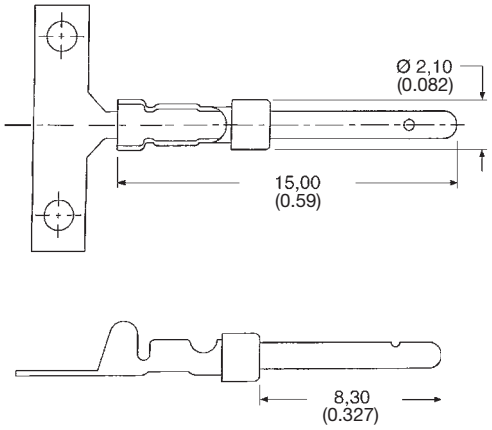

Socket Contacts

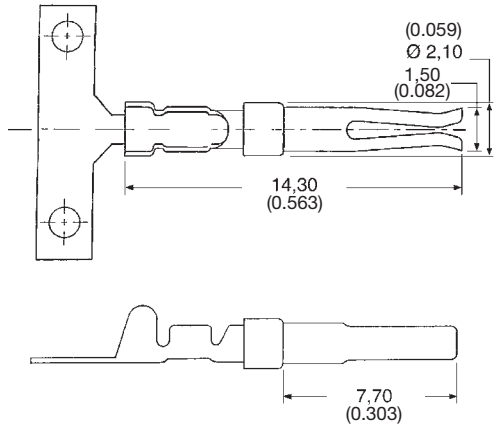

Loose Contacts
Stamped contacts with insulation support are supplied loose for use with hand crimp tooling. Two sizes are available to accommodate wire ranges 20 – 26 AWG.

Finish
30 µ inches Gold over Nickel

Pin Contacts



Part Number Pin Contact	
24-26 AWG	20-24 AWG
030-2487-017	030-2487-016

Socket Contacts



Part Number Socket Contact	
24-26 AWG	20-24 AWG
030-2488-017	030-2488-016

Crimp Tooling



Hand Crimp Tool

Description	Part Number
CCT-D*A-1	995-2000-000
CCT-2D*A (Alternate)	995-2000-075

Extraction Tool

Description	Part Number	Wire Size
CIET-D*A-20-24	980-0008-135	20-24 AWG
CIET-D*A 24-26	980-0008-136	24-26 AWG

ITT

Dimensions shown in mm
Specifications and dimensions subject to change
www.ittcannon.com

Cable (Size 8) Loose Contacts — Coaxial 75 Ohm

Stamped Crimp/Crimp

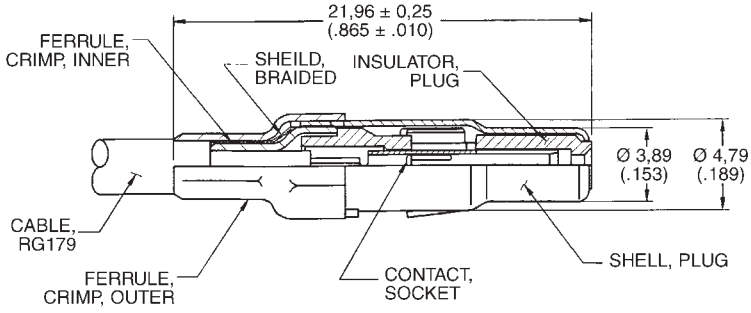

Recommended Wire Trim Dimensions

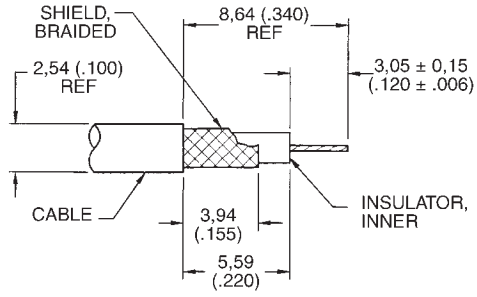

Kit (Body, Ferrule, Center Contact)

Stamped Crimp/Crimp	Kit Gold over Ni	Kit 30µ in. Gold over Ni	Kit 50µ in. Gold over Ni	RG Cable Number
Plug	D130322-2	D130322-1	D130322-6	179/U
Receptacle	D130344-1	D130344	D130344-2	179/U

Loose Components for High Volume (3 Pieces — Body, Ferrule, Center Contact)

Stamped Crimp/Crimp	Body	Ferrule	Center Contact Gold over Ni 10,000 Reel	Center Contact 30µ in. Gold over Ni 10,000 Reel
Plug	249-2272-000	304-0444-000	110238-1015	110238-1012
Receptacle	249-2271-000	304-0444-000	110238-1014	110238-1013

Tooling for Stamped Crimp/Crimp



Description	Crimping Tool	Tool Number
Stamped Center Conductor	Hand Crimp, "B" Crimp	CCTP-750HM
	Semi-Automatic Crimper	ABT-607 (Leased)
Stamped Outer Conductor	Hand Tool, Hex Crimp	CCTP-DM
	Pneumatic Hex Crimp	995-2000-094

For semi-automatic tooling, see page 98.

Dimensions shown in mm
Specifications and dimensions subject to change

Cable (Size 8) Loose Contacts — Coaxial 75 Ohm — 90°

90° Crimp Braid/Solder Center Contact

	Part Number Gold over Ni	Part Number 30 µin. Gold over Ni	Part Number 50 µin. Gold over Ni
Plug	D130357-1	D130357	D130357-4
Receptacle	D130356-1	D130356	D130356-3

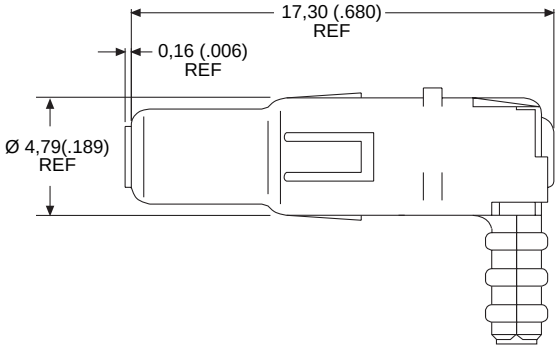

Plug

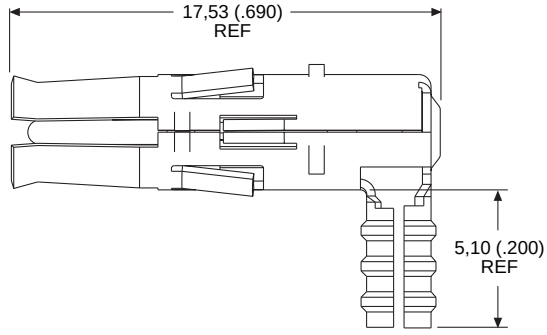

Receptacle

Note: Ferrule not shown.

Note: Ferrule not shown.

Tooling for 90° Crimp Braid

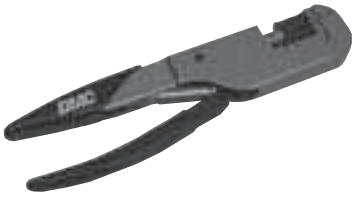

Description	Part Number
Hand Tool:	995-0001-761
Die Set:	995-2000-110

Loose Contacts Size 8 – Coaxial 50 Ohm, Straight

Straight Crimp Braid

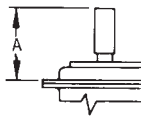

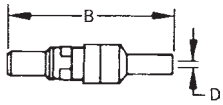

Plug

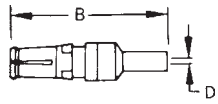

Receptacle

Note: Dimensions include outer sleeve.

	Part Number Gold over Nickel	Part Number (50 µin) 1,27 µm Gold over Copper	A max	B max	D min	RG Cable Number old	new
Plug	DM53740	DM35740-17	18,80 (.74)	24,00 (.94)	1,00 (.039)	196/U	178B/U
Plug	DM53740-1	DM53740-15	18,80 (.74)	24,00 (.94)	1,70 (.067)	187/U	179B/U
						188/U	316B/U
Plug	DM53740-35	–	18,80 (.74)	24,00 (.94)	1,70 (.067)	–	RD316
Plug	DM53740-3	DM53740-16	21,50 (.847)	26,34 (1.037)	2,79 (.110)	195/U	180B/U
Plug	DM53740-5	DM53740-18	21,50 (.847)	26,34 (1.037)	3,18 (.125)	58/U	588/U
Receptacle	DM53742	DM53742-18	18,80 (.74)	24,00 (.94)	1,00 (.039)	196/U	178B/U
Receptacle	DM53742-1	DM53742-16	18,80 (.74)	24,00 (.94)	1,70 (.067)	187/U	179B/U
						188/U	316B/U
Receptacle	DM53742-36	–	18,80 (.74)	24,00 (.94)	1,70 (.067)	–	RD316
Receptacle	DM53742-5	DM53742-19	21,50 (.847)	26,34 (1.037)	3,18 (.125)	58/U	58B/U
Receptacle	DM53742-5	DM53742-19	21,50 (.847)	26,34 (1.037)	3,18 (.125)	58/U	588/U

For Crimp tooling, see page 47.

Straight Solder Braid

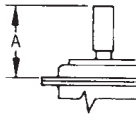

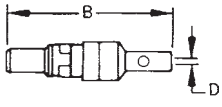

Plug

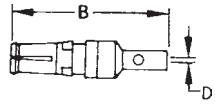

Receptacle

	Part Number Gold over Nickel	Part Number 1,27 µm Gold over Copper	A max	B max	D min	RG Cable Number old	new
Plug	DM53740-5008	DM53740-5105	18,80 (.74)	24,00 (.94)	1,00 (.039)	196/U	178B/U
Plug	DM53740-5001	DM53740-5099	18,80 (.74)	24,00 (.94)	1,70 (.067)	187/U	179B/U
						188/U	316B/U
Plug	DM53740-5145	–	18,80 (.74)	24,00 (.94)	1,70 (.067)	–	RD316
Plug	DM53740-5002	DM53740-5104	21,50 (.847)	26,34 (1.037)	2,79 (.110)	195/U	180B/U
Plug	DM53740-5005	DM53740-5101	21,50 (.847)	26,34 (1.037)	3.18 (.125)	58/U	58/U
Plug (Short)	DM53640-5000	DM53740-5100	17,00 (.670)	22,20 (.882)	1,14 (.045)	196/U	178B/U
Receptacle	DM53742-5126	DM53742-5092	18,80 (.74)	24,00 (.94)	1,00 (.039)	196/U	178B/U
Receptacle	DM53742-5002	DM53742-5086	18,80 (.74)	24,00 (.94)	1.70 (.067)	187/U	179B/U
						188/U	316B/U
Receptacle	DM53742-5126	–	18,80 (.74)	24,00 (.94)	1,70 (.067)	–	RD316
Receptacle	DM53742-5002	DM53742-5091	21,50 (.847)	26,34 (1.037)	2,79 (.110)	195/U	180B/U
Receptacle	DM53742-5004	DM53742-5086	21,50 (.847)	26,34 (1.037)	3,18 (.125)	58/U	58/U
Receptacle (Short)	DM53742-5000	DM53742-5085	17,00 (.670)	22,20 (.882)	1,14 (.045)	196/U	178B/U

Dimensions shown in mm
Specifications and dimensions subject to change

Loose Contacts Size 8 – Coaxial 50 Ohm, 90°

90° Crimp Braid

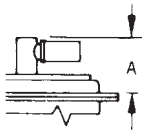

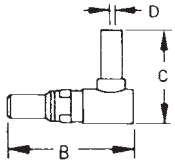

Plug

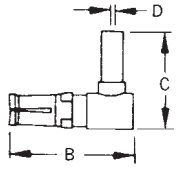

Receptacle

Note: Dimensions include outer sleeve.

	Part Number Gold over Nickel	Part Number 50 µ in Gold over Copper	A max	B max	C	D ± 0,13	RG Cable Number old	RG Cable Number new
Plug	DM53741	DM53741-12	13,46 (.530)	18,92 (.745)	15,10 (.594)	1,14 (.045)	196/U	178B/U
Plug	DM53741-1	DM53741-11	13,46 (.530)	18,92 (.745)	15,10 (.594)	1,83 (.072)	187/U	179B/U
							188/U	316B/U
Plug	DM53741-3	DM53741-10	13,46 (.530)	18,92 (.745)	16,00 (.630)	2,79 (.110)		
Plug	DM53741-4	DM53741-13	13,46 (.530)	18,92 (.745)	16,00 (.630)	3,18 (.125)	58/U	58B/U
Receptacle	DM53743-2	DM53743-18	13,46 (.530)	18,92 (.745)	15,09 (.594)	1,14 (.045)	196/U	178B/U
Receptacle	DM53743-3	DM53743-16	13,46 (.530)	18,92 (.745)	15,09 (.594)	1,83 (.072)	187/U	179B/U
							188/U	316B/U
Receptacle	DM53743-5	DM53743-17	13,46 (.530)	18,92 (.745)	16,00 (.630)	2,79 (.110)		
Receptacle	DM53743-6	DM53743-19	13,46 (.530)	18,92 (.745)	16,00 (.630)	3,18 (.125)	58/U	58B/U

For Crimp tooling, see page 47.

90° Solder Braid

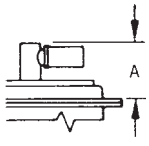

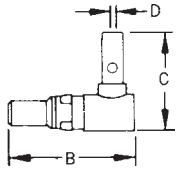

Plug

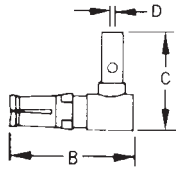

Receptacle

	Part Number Gold over Nickel	Part Number 50 µ in Gold over Copper	A max	B max	C	D ± 0,13	RG Cable Number old	RG Cable Number new
Plug	DM53741-5000	DM53741-5059	13,46 (.530)	18,92 (.745)	15,10 (.594)	1,00 (.039)	196/U	178B/U
Plug	DM53741-5001	DM53741-5062	13,46 (.530)	18,92 (.745)	15,10 (.594)	1,70 (.067)	187/U	179B/U
							188/U	316B/U
Plug	DM53741-5003	DM53741-5063	13,46 (.530)	18,92 (.745)	16,00 (.630)	2,79 (.110)		
Plug	DM53741-5004	DM53741-5060	13,46 (.530)	18,92 (.745)	16,00 (.630)	3,18 (.125)	58/U	58B/U
Receptacle	DM53743-5000	DM53743-5073	13,46 (.530)	18,92 (.745)	15,09 (.594)	1,00 (.039)	196/U	178B/U
Receptacle	DM53743-5001	DM53743-5076	13,46 (.530)	18,92 (.745)	15,09 (.594)	1,70 (.067)	187/U	179B/U
							188/U	316B/U
Receptacle	DM53743-5003	DM53743-5077	13,46 (.530)	18,92 (.745)	16,00 (.630)	2,79 (.110)		
Receptacle	DM53743-5004	DM53743-5074	13,46 (.530)	18,92 (.745)	16,00 (.630)	3,18 (.125)	58/U	58B/U

Cable (Size 8) Loose Contacts — Coaxial 50 Ohm — Straight

Straight Crimp Braid

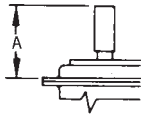

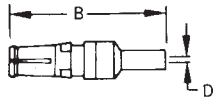

Plug

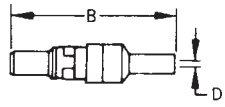

Receptacle

Note: Dimensions include outer sleeve

Description	Part Number 50µ in. Gold Over Copper	A max.	B max.	D min.	RG Cable Number Old	New
Plug	DM53740-36	18,80 (.739)	24,00 (.945)	1,70 (.067)	187/U 188/U	179B/U 316B/U
Receptacle	DM53742-37	18,80 (.739)	24,00 (.945)	1,70 (.067)	187/U 188/U	179B/U 316B/U

Staight Solder Braid

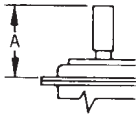

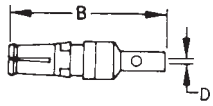

Plug

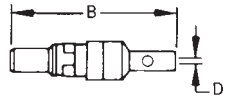

Receptacle

Description	Part Number 50µ in. Gold Over Copper	A max.	B max.	D min.	RG Cable Number Old	New
Plug	DM53740-5147	18,80 (.739)	24,00 (.945)	1,70 (.067)	187/U 188/U	179B/U 316B/U
Receptacle	DM53742-5127	18,80 (.739)	24,00 (.945)	1,70 (.067)	187/U 188/U	179B/U 316B/U

Insertion / Extraction Instructions for Coaxial, High Power and High Voltage Contacts

Insertion Tool

No insertion tool is required. The contact is easily snapped in from the rear of the connector manually.

Insertion Instructions

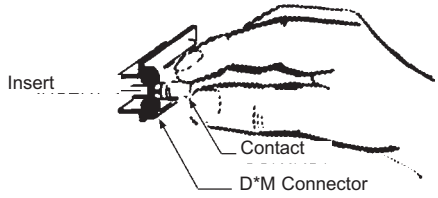

Extraction Tool

CET-CGB-2

The CET-C6B-2 tool extracts all coaxial, high power and high voltage contacts (plug and receptacle).

Description	Part Number
CET-C6B-2	070064-0002

Operating Instructions

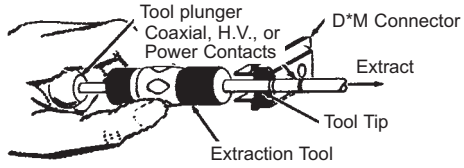

To extract the coaxial contact, hold the tool by the body and insert the tip into the front of the contact cavity until it bottoms and closes the coaxial retaining ring. Holding the body in this position securely enough to keep coaxial retaining ring closed, push the plunger; contact will be pushed out of the rear of the assembly.

Coaxial Assembly Instructions

Straight and 90° Coaxial Assembly Step 1:

Slide the outer ring over the cable jacket. Trim the cable as specified in the table of Coaxial Cable Trim Dimensions (see this page). Insert the cable dielectric and center conductor into the inside diameter of the inner sleeve. Then solder the center conductor to the coaxial center contact.

Straight Coaxial

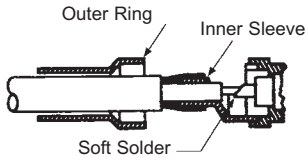

90° Coaxial

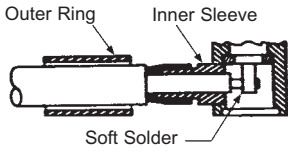

Straight and 90° Coaxial Assembly Step 2:

Slide the outer ring forward until it is flush with the coaxial shell containing the braid between the outer ring and the inner sleeve. For solder type coaxes, soft solder the outer ring to the assembly through the cross-drilled solder hold. For crimp type coaxes, crimp with the appropriate tool in the area defined.

Straight Coaxial

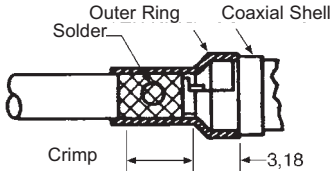

90° Coaxial

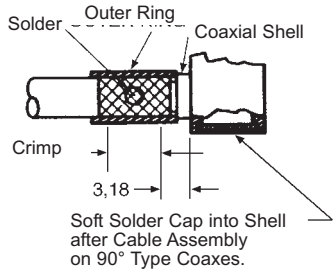

Coaxial Cable Trim Dimensions

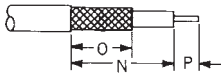

Straight Coaxial RG Cable Number	N	O	P
196/U, 178B/U, 187/U, 188/U, 179B/U, 316B/U	7,92 (.312)	6,35 (.250)	1,98 (.078)
58/U, 58B/U	9,52 (.375)	7,92 (.312)	1,98 (.078)

90° Coaxial RG Cable Number	N	O	P
196/U, 178B/U, 187/U, 188/U, 179B/U, 316B/U	9,52	5,94	1,57
58/U, 58B/U	10,69	7,92	2,39

Crimp Tooling



RG Cable Number Closure	Tool Part Number		Description
196/U, 178B/U	070051-0000	CCT-DM	A
187/U, 179B/U, 188/U, 316B/U	070051-0000	CCT-DM	B
58/U, 58B/U	070051-0000	CCT-DM	C

Hand Tool with integral die set for all coaxial straight crimp braid.

Dimensions shown in mm
Specifications and dimensions subject to change

Loose Contacts, Size 8 – High Power – Solder

Plug



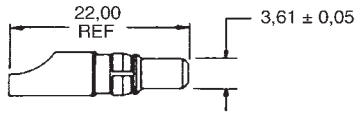

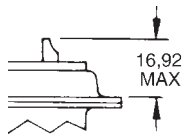

Part Number Gold over Copper	Part Number (50 µin) 1,27 µm Gold over Copper	Current Rating A	Wire Size AWG
DM53745-1	DM53745-28	40 A	8 AWG
DM53745-7	DM53745-27	20 A	12 AWG
DM53745-8	DM53745-25	10 A	16 AWG
Extended Length Pin	DMS53745-134		

Receptacle



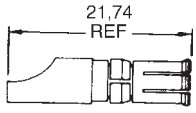

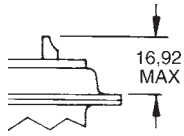

Part Number Gold over Nickel	Part Number (50 µin) 1,27 µm Gold over Copper	Current Rating A	Wire Size AWG
DM53744-1	DM53744-21	40 A	8 AWG
DM53744-6	DM53744-25	20 A	12 AWG
DM53744-7	DM53744-24	10 A	16 AWG

Loose Contacts, Size 8 – High Power – Crimp

Plug



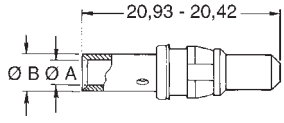

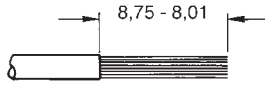

Part Number Gold over Nickel	Part Number (30 µin) 0,76 µm Gold over Copper	Part Number (50 µin) 1,27 µm Gold over Copper	A	B	Current Rating A	Wire Size AWG
DM130338-4	DM130338	DM130338-1	4,60 (.181)	5,84 (.230)	40 A	8 AWG
DM130339-4	DM130339	DM130339-1	2,54 (.100)	5,54 (.218)	20 A	12 AWG
DM130340-4	DM130340	DM130340-1	1,07 (.067)	2,59 (.102)	10 A	16 AWG
Extended Length Pin	DM130339-6					

Receptacle



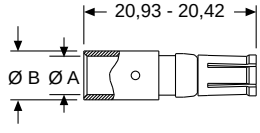

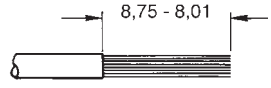

Part Number Gold over NIckel	Part Number (30 µin) 0,76 µm Gold over Copper	Part Number (50 µin) 1,27 µm Gold over Copper	A	B	Current Rating A	Wire Size AWG
DM130341-4	DM130341	DM130341-1	4,60 (.181)	5,84 (.230)	40 A	8 AWG
DM130342-4	DM130342	DM130342-1	2,54 (.100)	5,54 (.218)	20 A	12 AWG
DM130343-4	DM130343	DM130343-1	1,07 (.067)	2,59 (.102)	10 A	16 AWG

High Power Crimp Tooling



Wire Size AWG	Crimp Tool	Tool Setting Number	Locator
8 AWG	M300-BT	6	TP968
10 AWG	M300-BT	5	TP968
12/14 AWG	M300-BT	1	TP968
16 AWG	FT-8	6	TH554
18 AWG	FT-8	5	TH554

Dimensions shown in mm

Specifications and dimensions subject to change

Loose Contacts, Size 8 — High Power — Solder —Non-Magnetic

Plug



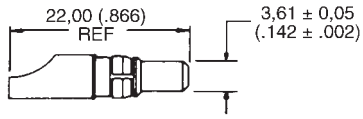

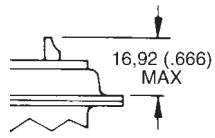

Part Number 50µ. in. Gold Over Copper Non-Magnetic	Part Number 50µ. in. Gold Over Copper Non-Magnetic (European)	Current Rating	Wire Size
DM53745-72	DM115224-1040A	40 A	8 AWG
DM53745-71	DM115224-1020A	20 A	12 AWG
DM53745-70	DM115224-1010A	10 A	16 AWG

Receptacle



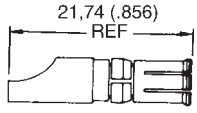

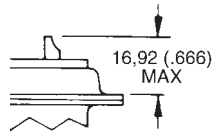

Part Number 50µ. in. Gold Over Copper Non-Magnetic	Part Number 50µ. in. Gold Over Copper Non-Magnetic (European)	Current Rating	Wire Size
DM53744-62	DM115224-2040A	40 A	8 AWG
DM53744-64	DM115224-2020A	20 A	12 AWG
DM53744-63	DM115224-2010A	10 A	16 AWG

Loose Contacts, Size 8 — High Power — Crimp—Non-Magnetic

Plug



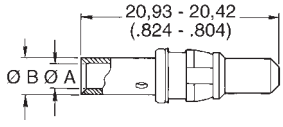

Recommended Wire Trim Length

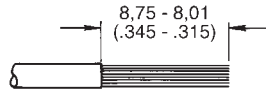

Part Number 50µ. in. Gold Over Copper Non-Magnetic	XA max.	XB max.	Part Number 50µ. in. Gold Over Copper Non-Magnetic (European)	XA min.	XB max.	Current Rating	Wire Size
DM115224-3040	4,60 (.181)	5,84 (.230)	DM115224-3040A	4,20 (.165)	5,80 (.228)	40 A	8 AWG
DM115224-3020	2,54 (.100)	5,54 (.218)	DM115224-3020A	3,25 (.128)	4,70 (.185)	20 A	12 AWG
DM115224-3010	1,07 (.067)	2,59 (.102)	DM115224-3010A	2,50 (.098)	3,80 (.150)	10 A	16 AWG

Receptacle



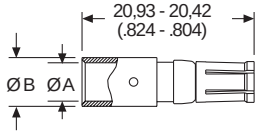

Recommended Wire Trim Length

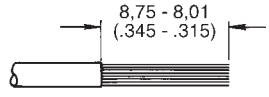

Part Number 50µ. in. Gold Over Copper Non-Magnetic	XA max.	XB max.	Part Number 50µ. in. Gold Over Copper Non-Magnetic (European)	XA min.	XB max.	Current Rating	Wire Size
DM115224-4040	4,60 (.181)	5,84 (.230)	DM115224-4040A	4,20 (.165)	5,80 (.228)	40 A	8 AWG
DM115224-4020	2,54 (.100)	5,54 (.218)	DM115224-4020A	3,25 (.128)	4,70 (.185)	20 A	12 AWG
DM115224-4010	1,07 (.067)	2,59 (.102)	DM115224-4010A	2,50 (.098)	3,80 (.150)	10 A	16 AWG

Crimp High Power Tooling

M300-BT



Wire Size	Crimp Tool/Locator: Crimp Tool	Tool Setting Number Standard Contacts	Tool Setting Number European Contacts	Locator
8 AWG	M300-BT	6	6	TP968
10 AWG	M300-BT	5	2	TP968
12 AWG	M300-BT	1	1	TP968

ITT

Dimensions shown in mm

Cable (Size 8) Loose Contacts — High Voltage — Straight

Plug



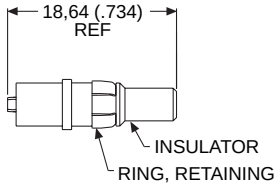

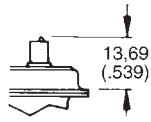

For tooling, see page .

Part Number Gold over Ni	Part Number 50 µin. Gold	Wire Size
DM51157	DM51157-8	20 AWG

Receptacle



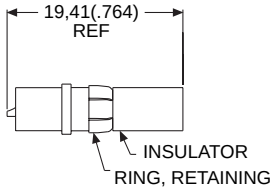

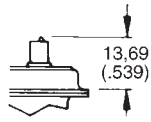

For tooling, see page .

Part Number Gold over Ni	Part Number 50 µin. Gold	Wire Size
DM51155	DM51155-7	20 AWG

Cable (Size 8) Loose Contacts — High Voltage — 90˚

Plug



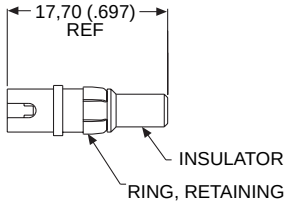

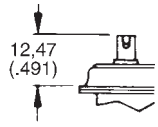

For tooling, see page

Part Number Gold over Ni	Part Number 50 µin. Gold	Wire Size
DM51157-5000	DM51157-5005	20 AWG

Receptacle



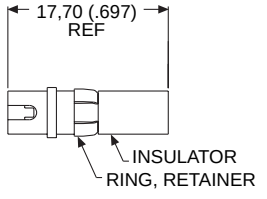

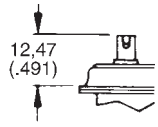

For tooling, see page

Part Number Gold over Ni	Part Number 50 µin. Gold	Wire Size
DM51155-5000	DM51155-5004	20 AWG

PCB (Size 8) Loose Contact — Coaxial — Straight

Plug

50 Ohm

Description	Part Number
Plug 30 µin Gold DM	130365
Plug 50 µin Gold DM	130365-2

75 Ohm

Description	Part Number
Plug 30 µin Au	DM130358-2
Plug 50 µin Au	DM130358-4



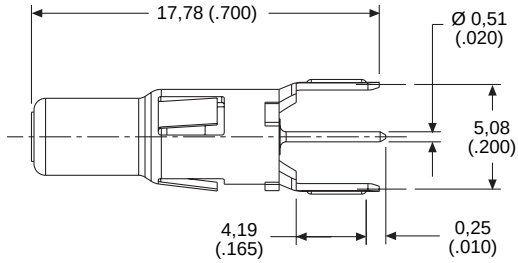

Receptacle

50 Ohm

Description	Part Number
Receptacle 30 µin Gold DM	130363
Receptacle 50 µin Gold DM	130363-2

75 Ohm

Description	Part Number
Receptacle 30 µin Gold	DM130346-2
Receptacle 50 µin Gold	DM130346-4

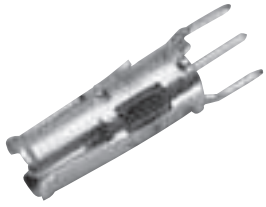

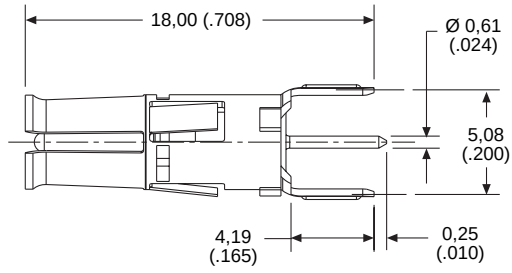

PCB (Size 8) Loose Contact — Coaxial — 90°

Plug

50 Ohm

Description	Part Number
Plug 30 µin Gold DM	130364
Plug 50 µin Gold DM	130364-2

75 Ohm

Description	Part Number
Plug 30 µin Gold	DM130352-2
Plug 50 µin Gold	DM130352-4



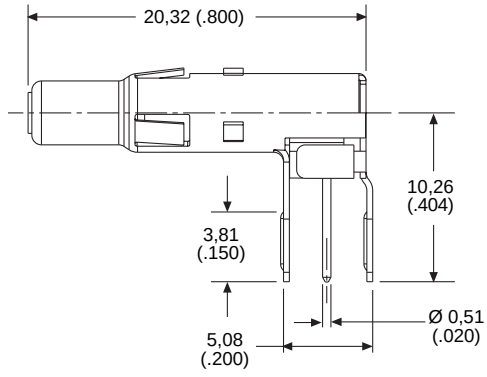

Receptacle

50 Ohm

Description	Part Number
Receptacle 30 µin Gold DM	130361
Receptacle 50 µin Gold DM	130361-2

75 Ohm

Description	Part Number
Receptacle 30 µin Gold	DM130321-3
Receptacle 50 µin Gold	DM130321-4



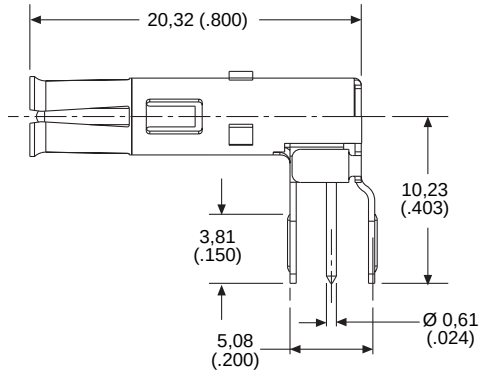

Dimensions shown in mm
Specifications and dimensions subject to change

PCB (Size 8) Loose Contact — High Power— Straight

Pin

Description	Part Number Gold Over Nickel	50 µin Gold
Pin	DM53745-110	DM53745-112
Extended Pin	DM53745-133	



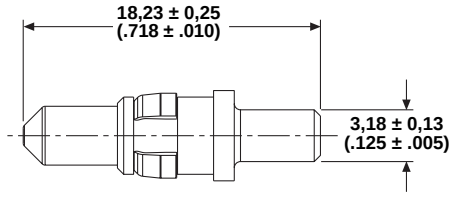

Socket

Description	Part Number Gold Over Nickel	50 µin Gold
Pin	DM53744-98	DM53744-100



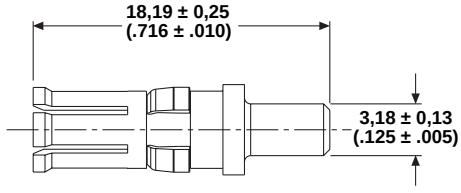

PCB (Size 8) Loose Contact — High power — 90°

Pin



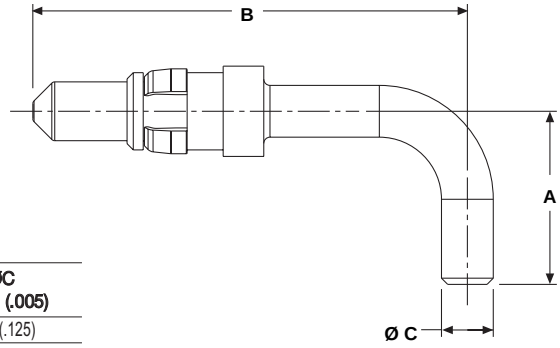

Shell Size	50 µin Gold Part Number	Gold Over Nickel Part Number	A ±0,25 (.010)	B ±0,25 (.010)	ØC ±0,13 (.005)
DE, DA, DB, DC	DM53745-106	DM53745-104	10,62 (.418)	26,64 (1.049)	3,18 (.125)
DD	DM53745-109	DM53745-107	13,41 (.528)	26,64 (1.049)	3,18 (.125)
European Footprint DE, DA, DB, DC, DD		DM53745-120	18,06 (.711)	11,00 (.433)	2,90 (.114)
Extended Pin		DM53745-135			

Socket



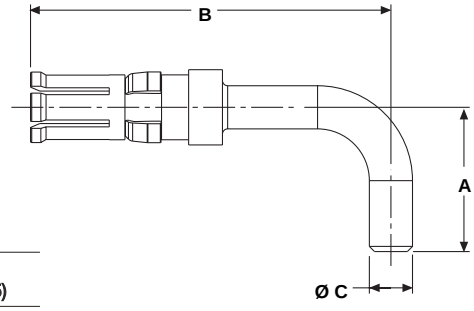

Shell Size	50 µin Gold Part Number	Gold Over Nickel Part Number	A ±0,25 (.010)	B ±0,25 (.010)	ØC ±0,13 (.005)
DE, DA, DB, DC	DM53744-94	DM53744-92	13,41 (.528)	26,52 (1.044)	3,18 (.125)
Extended DD	DM53744-97	DM53744-95	10,62 (.418)	26,52 (1.044)	3,18 (.125)
European Footprint DE, DA, DB, DC, DD		DM53744-107	11,00 (.433)	17,93 (.706)	2,90 (.114)

PCB (Size 8) Loose Contacts — High Voltage — Straight

Plug



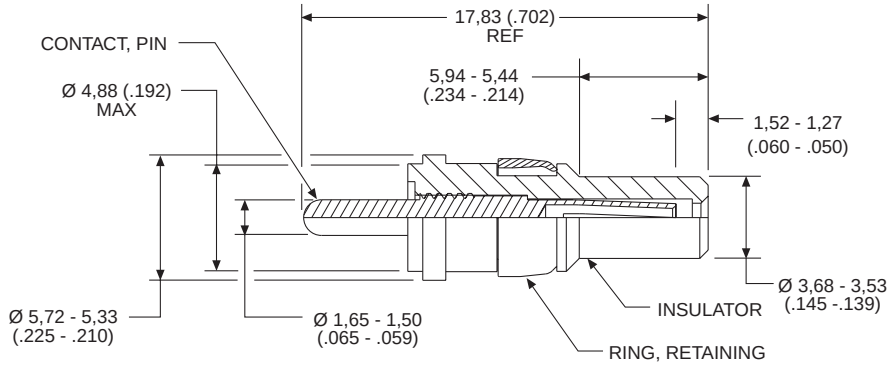

Part Number Gold over Ni	Part Number 50µ in. Gold
DM51157-13	DM51157-14

Receptacle

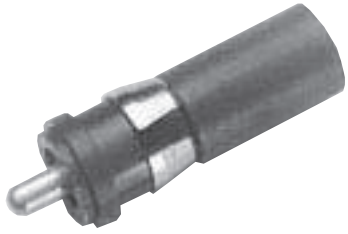

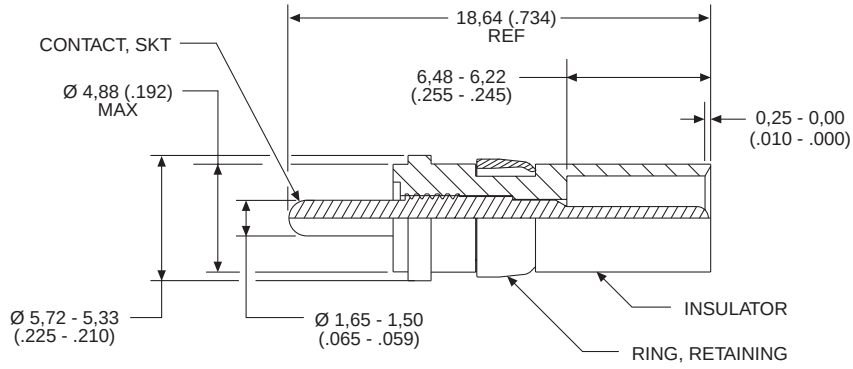

Part Number Gold over Ni	Part Number 50µ in. Gold
DM51155-12	DM51155-13

Dimensions shown in mm
Specifications and dimensions subject to change

Hybrid Connector (Electrical/Fiber Optic)

Size 8 Terminus Adapter allows any PHD Optical Terminus to be coupled into any Combo D connector.

Multi-functional Interconnect Series

Combining: 30 Amp power contact
RF contacts (straight/right angle)
Size 22 LF signal contacts (straight/right angle)
Size 22 Fiber Optic Termini (Single & Multi Mode)

	Multi Mode 62,5/125	Single Mode SMF 28
Ferrule (O.D.)	1.25 mm	1.25 mm
Insertion Loss (dB typ.)	0.30	0.35
Maximum Loss (dB max.)	0.50	0.60
Return Loss (dB typ.)	25	55
Return Loss (dB min.)	20	50
Channel Servicing	Single	
Channel Repair	Single	
Cyclic Durability	1000	

Fiber Optic Pin Adapter

Fiber Optic Socket Adapter

Product Notes

1. Packaging identification includes manufacturer's name and part number.
2. Material / Finish:
   Ferrule: Zirconia Ceramic / N.A.
   Terminus assembly: Brass Alloy / Gold plating
   Adapter assembly: Stainless steel / Passivate-hardware
3. Insertion / Removal tool: 274-0053-0000
4. Consult factor for assembly and termination tools or factory build cable assemblies.
5. Application include: Military/Aero space Fiber Optic Interconnect environments.

PHD Adapter Part Numbers		
Genderless Terminus for use with PHD Adapters & Combo-D Connectors		
	Ferrule I.D.	
Single Mode SMF28	125	031-9727-007
Multi Mode 50/125 & 62.5/125	127	031-9727-008
Multi Mode 100/140	142	031-9727-003

PHD Adapter Part Numbers	
Pin	Socket
140285-0000	140286-0000

Fiber Optic Pin Adapter

Fiber Optic Socket Adapter

Dimensions shown in mm
Specifications and dimensions subject to change

PCB Guide Pin and Socket



Installs into any Combo D, Size 8 cavity. This guide pin and socket system is ideal for blind mate applications where space is limited.

PCB Guide Pin



Part Number	Material	Finish
DM53745-126	Copper Alloy	Tin

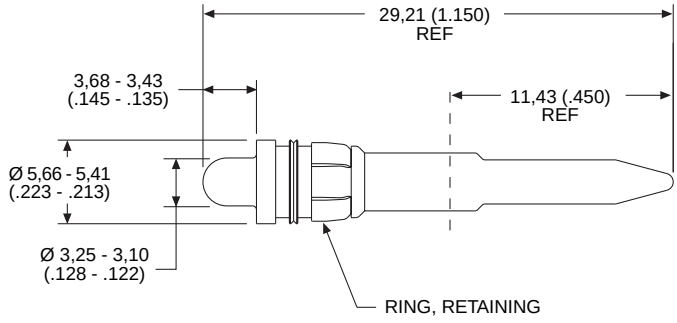

PCB Guide Socket



Part Number	Material	Finish
248-2967-000	Copper Alloy	Tin

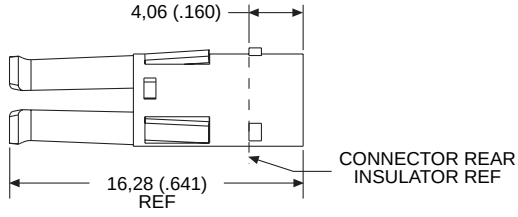

NASA/GSFC Cross Reference

NASA/GSFC Part Number	ITT Cannon Part Number	NASA/GSFC Part Number	ITT Cannon Part Number	NASA/GSFC Part Number	ITT Cannon Part Number
GO8P1	030-2042-002	311-P-10-12S-B-15	DBM13W3S-NMB-76	311-P-10-24P-B-12	DDM43W2P-NMB-77
GO8S1	031-1147-002				
S-311-P-4/6GCP1	DM53740-17	311-P-10-13P-B-12	DBM17W2PNMB77		
S-311-P-4/6GCP2	DM53740-15	311-P-10-13P-B-15	DBM-17W2P-NMB-76		
S-311-P-4/6GCP3	DM53740-16				
S-311-P-4/6GCP4	DM53740-18			311-P-10-3S-B-12	DBM25PNMB77
S-311-P-4/6GCRP1	DM53741-12	311-P-10-13S-B-12	DBM17W2SNMB77	311-P-10-3P-B-15	DBM25PNMB76
S-311-P-4/6GCRP2	DM53741-11				
S-311-P-4/6GCRP3	DM53741-10				
S-311-P-4/6GCRP4	DM53741-13	311-P-10-14P-B-12	DBM-21W1P-NMB-77	311-P-10-3S-B-12	DBM25PNMB77
S-311-P-4/6GCRS1	DM53743-18	311-P-10-14P-B-15	DBM-21W1P-NMB-76	311-P-10-3S-B-15	DBM-25S-NMB-76
S-311-P-4/6GCRS2	DM53743-16	311-P-10-14S-B-12	DBM-21W1S-NMB-77		
S-311-P-4/6GCRS3	DM53743-17	311-P-10-14S-B-15	DBM-21W1S-NMB-76		
S-311-P-4/6GCRS4	DM53743-19			311-P-10-4P-B-12	DCM37PNMB77
S-311-P-4/6GCS1	DM53742-18	311-P-10-15P-B-12	DCM-8W8P-NMB-77	311-P-10-4P-B-15	DCM37PNMB76
S-311-P-4/6GCS2	DM53742-16	311-P-10-15P-B-15	DCM8W8PNMB76		
S-311-P-4/6GCS3	DM53742-17				
S-311-P-4/6GCS4	DM53742-19			311-P-10-4S-B-12	DCM37SNMB77
S-311-P-4/6GHP6	DM51157-8	311-P-10-15S-B-12	DCM-8W8S-NMB-77	311-P-10-4S-B-15	DCM-37S-NMB-76
S-311-P-4/6GHRP6	DM51157-5005	311-P-10-15S-B-15	DCM8W8SNMB76		
S-311-P-4/6GHRS6	DM51155-5005				
S-311-P-4/6GHS6	DM51155-7			311-P-10-5P-B-12	DDM50PNMB77
311P409-1P-B-12	DEMA9PNMBK47FO	311-P-10-16P-B-12	DCM-13W6P-NMB-77	311-P-10-5P-B-15	DDM50PNMB76
311P409-1P-B-15	DEMAK9PNMBK47FO	311-P-10-16P-B-15	DCM-13W6P-NMB-76		
311P409-1S-B-12	DEMA9SNMBK47FO				
311P409-1S-B-15	DEMAK9SNMBK47FO			311-P-10-5S-B-12	DDM50SNMB77
311P409-2P-B-12	DEMA15PNMBK47FO	311-P-10-16S-B-12	DCM-13W6S-NMB-77	311-P-10-5S-B-15	DDM50SNMB76
311P409-2P-B-15	DEMAK15PNMBK47FO				
311P409-2S-B-12	DEMA15SNMBK47FO				
311P409-2S-B-15	DEMAK15SNMBK47FO	311-P-10-17P-B-12	DCM17W5PNMB77	311-P-10-6P-B-12	DEM-5W1P-NMB-77
311P409-3P-B-12	DEMA25PNMBK47FO	311-P-10-17P-B-15	DCM-17W5P-NMB-76	311-P-10-6P-B-15	DEM-5W1P-NMB-76
311P409-3P-B-15	DEMAK25PNMBK47FO				
311P409-3S-B-12	DEMA25SNMBK47FO			311-P-10-6S-B-12	DEM-5W1S-NMB-77
311P409-3S-B-15	DEMAK25SNMBK47FO	311-P-10-17S-B-12	DCM-17W5S-NMB-77		
311P409-4P-B-12	DEMA37PNMBK47FO	311-P-10-17S-B-15	DCM17W5S-NMB-76	311-P-10-7P-B-12	DAM3W3PNMB77
311P409-4P-B-15	DEMAK37PNMBK47FO			311-P-10-7P-B-15	DAM-3W3P-NMB-76
311P409-4S-B-12	DEMA37SNMBK47FO				
311P409-4S-B-15	DEMAK37SNMBK47FO	311-P-10-18P-B-12	DCM-21WA4P-NMB-77		
311P409-5P-B-12	DEMA50PNMBK47FO	311-P-10-18P-B-12	DCM21WA4P-NMB-76	311-P-10-7S-B-12	DAM3W3SNMB77
311P409-5S-B-15	DEMAK50PNMBK47FO			311-P-10-7S-B-15	DAM3W3SNMB76
311P409-5S-B-12	DEMA50SNMBK47FO	311-P-10-18S-B-12	DCM-21WA4S-NMB-77		
311P409-5S-B-15	DEMAK50PNMBK47FO	311-P-10-18S-B-15	DCM21WA4S-NMB-76		
S-311-P-4/10G1OP1	330-5291-081-02	311-P-10-19P-B-12	DCM-21W4P-NMB-77	311-P-10-8P-B-12	DAM-7W2P-NMB-77
S-311-P-4/10G1OS1	031-1007-052-05	311-P-10-19S-B-12	DCM-21W4S-NMB-77	311-P-10-8P-B-15	DAM-7W2P-NMB-76
311-P-10-B-1S-B-15	DEMB9S-NMB-76				
311-P-10-B-4S-B-15	DCMB37S-NMB-76	311-P-10-2P-B-12	DAM15PNMB77	311-P-10-8S-B-12	DAM-7W2S-NMB-77
311-P-10-1P-B-12	DEMPPNMB77	311-P-10-2P-B-15	DAM15PNMB76		
311-P-10-1P-B-15	DEM-9P-NMB-76				
				311-P-10-9P-B-12	DAM-11W1P-NMB-77
		311-P-10-2S-B-12	DAM15SNMB77	311-P-10-9P-B-15	DAM-11W1P-NMB-76
311-P-10-1S-B-12	DEM9SNMB77	311-P-10-2S-B-15	DAM-15S-NMB-76		
311-P-10-1S-B-15	DEM-9S-NMB-76				
				311-P-10-9S-B-12	DAM-11W1S-NMB-77
		311-P-10-20P-B-12	DCM-25W3P-NMB-77	311-P-10-9S-B-15	DAM-11W1S-NMB-76
311-P-10-10P-B-12	DBM5W5PNMB77				
311-P-10-10P-B-15	DBM-5W5P-NMB-76	311-P-10-20S-B-12	DCM-25W36-NMB-77		
				311-P-10B-1S-B-12	DEMB9SNMB77
311-P-10-10S-B-12	DBM-5W5S-NMB-77				
311-P-10-10S-B-15	DBM-5W5S-NMB-76			311-P-10B-13S-B-15	DBMB-17W2S-NMB-76
		311-P-10-22P-B-12	DDM-24W7P-NMB-77	311-P-10B-17S-B-15	DCMB-17W5S-NMB-76
		311-P-10-22P-B-15	DDM24W7PNMB76	311-P-10B-2S-B-12	DAMB15SNMB77
311-P-10-11P-B-12	DBM-9W4P-NMB-77				
		311-P-10-22S-B-12	DDM24W7SNMB77		
311-P-10-11S-B-12	DBM-9W4S-NMB-77	311-P-10-22S-B-15	DDM-24W7S-NMB-76	311-P-10B-22S-B-15	DDMB-247S-NMB-76
				311-P-10B-3S-B-12	DBMB-25S-NMB-77
311-P-10-12P-B-12	DBM13W3P-NMB-77	311-P-10-23P-B-12	DDM-36W4P-NMB-77	311-P-10B-3S-B-15	DBMB-25S-NMB-76
311-P-10-12P-B-15	DBM-13W3P-NMB-76	311-P-10-23S-B-12	DDM-36W4S-NMB-77		
		311-P-10-23S-B-15	DDM36W4SNMB76		
311-P-10-12S-B-12	DBM-13W3S-NMB-77			311-P-10B-4S-B-12	DCMB-37S-NMB-77

NASA/GSFC Cross Reference

NASA/GSFC Part Number	ITT Cannon Part Number	NASA/GSFC Part Number	ITT Cannon Part Number	NASA/GSFC Part Number	ITT Cannon Part Number
				311-P-10B-8S-B-15	DAMB-7W2S-NMB-76
				311-P-10B-9S-B-12	DAMB-11W1S-NMB-77
311-P-10B-5S-B-12	DDMB-50S-NMB-77	311-P-10B-6S-B-15	DEMB-5W1S-NMB-76		
311-P-10B-5S-B-15	DDMB50S-NMB-76	311-P-10B-8S-B-12	DAMB-7W2S-NMB-77		

ESA/SCC Cross Reference

ESA-SCC Part Number	ITT Cannon Part Number	ESA-SCC Part Number	ITT Cannon Part Number	ESA-SCC Part Number	ITT Cannon Part Number
340100101B	DEM5W1SNMBK52	340100101B	DBM17W2POL3NMBK52	340100101B	DAM7W2P1A7NNMBK52
340100101B	DAM3W3SNMBK52	340100101B	DBM21W1POL3NMBK52	340100101B	DAM11W1P1A7NNMBK52
340100101B	DAM7W2SNMBK52	340100101B	DCM13W6POL3NMBK52	340100101B	DBM9W4P1A7NNMBK52
340100101B	DAM11W1SNMBK52	340100101B	DCM17W5POL3NMBK52	340100101B	DBM13W3P1A7NNMBK52
340100101B	DBM5W5SNMBK52	340100101B	DCM21WA4POL3NMBK52	340100101B	DBM17W2P1A7NNMBK52
340100101B	DBM9W4SNMBK52	340100101B	DCM25W3POL3NMBK52	340100101B	DBM21W1P1A7NNMBK52
340100101B	DBM13W3SNMBK52	340100101B	DCM27W2POL3NMBK52	340100101B	DCM13W6P1A7NNMBK52
340100101B	DBM17W2SNMBK52	340100101B	DDM24W7POL3NMBK52	340100101B	DCM17W5P1A7NNMBK52
340100101B	DBM21W1SNMBK52	340100101B	DDM36W4POL3NMBK52	340100101B	DCM21WA4P1A7NNMBK52
340100101B	DCM8W8SNMBK52	340100101B	DDM43W2POL3NMBK52	340100101B	DCM25W3P1A7NNMBK52
340100101B	DCM13W6SNMBK52	340100101B	DDM47W1POL3NMBK52	340100101B	DCM27W2P1A7NNMBK52
340100101B	DCM17W5SNMBK52	340100101B	DEM5W1S1AONNMBK52	340100101B	DDM24W7P1A7NNMBK52
340100101B	DCM21WA4SNMBK52	340100101B	DAM7W2S1AONNMBK52	340100101B	DDM36W4P1A7NNMBK52
340100101B	DCM25W3SNMBK52	340100101B	DAM11W1S1AONNMBK52	340100101B	DDM43W2P1A7NNMBK52
340100101B	DCM27W2SNMBK52	340100101B	DBM9W4S1AONNMBK52	340100101B	DDM47W1P1A7NNMBK52
340100101B	DDM24W7SNMBK52	340100101B	DBM13W3S1AONNMBK52	340100101B	DEM5W1S1A9NNMBK52
340100101B	DDM36W4SNMBK52	340100101B	DBM17W2S1AONNMBK52	340100101B	DAM7W2S1A9NNMBK52
340100101B	DDM43W2SNMBK52	340100101B	DBM21W1S1AONNMBK52	340100101B	DAM11W1S1A9NNMBK52
340100101B	DDM47W1SNMBK52	340100101B	DCM13W6S1AONNMBK52	340100101B	DBM9W4S1A9NNMBK52
340100101B	DEM5W1PNMBK52	340100101B	DCM17W5S1AONNMBK52	340100101B	DBM13W3S1A9NNMBK52
340100101B	DAM3W3PNMBK52	340100101B	DCM21WA4S1AONNMBK52	340100101B	DBM17W2S1A9NNMBK52
340100101B	DAM7W2PNMBK52	340100101B	DCM25W3S1AONNMBK52	340100101B	DBM21W1S1A9NNMBK52
340100101B	DAM11W1PNMBK52	340100101B	DCM27W2S1AONNMBK52	340100101B	DCM13W6S1A9NNMBK52
340100101B	DBM5W5PNMBK52	340100101B	DDM24W7S1AONNMBK52	340100101B	DCM17W5S1A9NNMBK52
340100101B	DBM9W4PNMBK52	340100101B	DDM36W4S1AONNMBK52	340100101B	DCM21WA4S1A9NNMBK52
340100101B	DBM13W3PNMBK52	340100101B	DDM43W2S1AONNMBK52	340100101B	DCM25W3S1A9NNMBK52
340100101B	DBM17W2PNMBK52	340100101B	DDM47W1S1AONNMBK52	340100101B	DCM27W2S1A9NNMBK52
340100101B	DBM21W1PNMBK52	340100101B	DEM5W1P1AONNMBK52	340100101B	DDM24W7S1A9NNMBK52
340100101B	DCM8W8PNMBK52	340100101B	DAM7W2P1AONNMBK52	340100101B	DDM36W4S1A9NNMBK52
340100101B	DCM13W6PNMBK52	340100101B	DAM11W1P1AONNMBK52	340100101B	DDM43W2S1A9NNMBK52
340100101B	DCM17W5PNMBK52	340100101B	DBM9W4P1AONNMBK52	340100101B	DDM47W1S1A9NNMBK52
340100101B	DCM21WA4PNMBK52	340100101B	DBM13W3P1AONNMBK52	340100101B	DEM5W1P1A9NNMBK52
340100101B	DCM25W3PNMBK52	340100101B	DBM17W2P1AONNMBK52	340100101B	DAM7W2P1A9NNMBK52
340100101B	DCM27W2PNMBK52	340100101B	DBM21W1P1AONNMBK52	340100101B	DAM11W1P1A9NNMBK52
340100101B	DDM24W7PNMBK52	340100101B	DCM13W6P1AONNMBK52	340100101B	DBM9W4P1A9NNMBK52
340100101B	DDM36W4PNMBK52	340100101B	DCM17W5P1AONNMBK52	340100101B	DBM13W3P1A9NNMBK52
340100101B	DDM43W2PNMBK52	340100101B	DCM21WA4P1AONNMBK52	340100101B	DBM17W2P1A9NNMBK52
340100101B	DDM47W1PNMBK52	340100101B	DCM25W3P1AONNMBK52	340100101B	DBM21W1P1A9NNMBK52
340100101B	DEM5W1SOL3NMBK52	340100101B	DCM27W2P1AONNMBK52	340100101B	DCM13W6P1A9NNMBK52
340100101B	DAM7W2SOL3NMBK52	340100101B	DDM24W7P1AONNMBK52	340100101B	DCM17W5P1A9NNMBK52
340100101B	DAM11W1SOL3NMBK52	340100101B	DDM36W4P1AONNMBK52	340100101B	DCM21WA4P1A9NNMBK52
340100101B	DBM9W4SOL3NMBK52	340100101B	DDM43W2P1AONNMBK52	340100101B	DCM25W3P1A9NNMBK52
340100101B	DBM13W3SOL3NMBK52	340100101B	DDM47W1P1AONNMBK52	340100101B	DCM27W2P1A9NNMBK52
340100101B	DBM17W2SOL3NMBK52	340100101B	DEM5W1S1A7NNMBK52	340100101B	DDM24W7P1A9NNMBK52
340100101B	DBM21W1SOL3NMBK52	340100101B	DAM7W2S1A7NNMBK52	340100101B	DDM36W4P1A9NNMBK52
340100101B	DCM13W6SOL3NMBK52	340100101B	DAM11W1S1A7NNMBK52	340100101B	DDM43W2P1A9NNMBK52
340100101B	DCM17W5SOL3NMBK52	340100101B	DBM9W4S1A7NNMBK52	340100101B	DDM47W1P1A9NNMBK52
340100101B	DCM21WA4SOL3NMBK52	340100101B	DBM13W3S1A7NNMBK52	340100101B	DEM5W1SF179ANMBK52
340100101B	DCM25W3SOL3NMBK52	340100101B	DBM17W2S1A7NNMBK52	340100101B	DAM7W2SF179ANMBK52
340100101B	DCM27W2OL3NMBK52	340100101B	DBM21W1S1A7NNMBK52	340100101B	DAM11W1SF179ANMBK52
340100101B	DDM24W7SOL3NMBK52	340100101B	DCM13W6S1A7NNMBK52	340100101B	DBM9W4SF179ANMBK52
340100101B	DDM36W4SOL3NMBK52	340100101B	DCM17W5S1A7NNMBK52	340100101B	DBM13W3SF179ANMBK52
340100101B	DDM43W2SOL3NMBK52	340100101B	DCM21WA4S1A7NNMBK52	340100101B	DBM17W2SF179ANMBK52
340100101B	DDM47W1SOL3NMBK52	340100101B	DCM25W3S1A7NNMBK52	340100101B	DBM21W1SF179ANMBK52
340100101B	DEM5W1POL3NMBK52	340100101B	DCM27W2S1A7NNMBK52	340100101B	DCM13W6SF179ANMBK52
340100101B	DAM3W3POL3NMBK52	340100101B	DDM24W7S1A7NNMBK52	340100101B	DCM17W5SF179ANMBK52
340100101B	DAM7W2POL3NMBK52	340100101B	DDM36W4S1A7NNMBK52	340100101B	DCM21WA4SF179ANMBK52
340100101B	DAM11W1POL3NMBK52	340100101B	DDM43W2S1A7NNMBK52	340100101B	DCM25W3SF179ANMBK52
340100101B	DBM9W4POL3NMBK52	340100101B	DDM47W1S1A7NNMBK52	340100101B	DCM27W2SF179ANMBK52
340100101B	DBM13W3POL3NMBK52	340100101B	DEM5W1P1A7NNMBK52	340100101B	DDM24W7SF179ANMBK52

ESA/SCC Cross Reference

ESA-SCC Part Number	ITT Cannon Part Number
340100101B	DDM36W4SF179ANMB DDM36W4SF179ANMBK52
340100101B	DDM43W2SF179ANMB DDM43W2SF179ANMBK52
340100101B	DDM47W1SF179ANMB DDM47W1SF179ANMBK52
340100101B	DEM5W1PF179ANMB DEM5W1PF179ANMBK52
340100101B	DAM7W2PF179ANMB DAM7W2PF179ANMBK52
340100101B	DAM11W1PF179ANMB DAM11W1PF179ANMBK52
340100101B	DBM9W4PF179ANMB DBM9W4PF179ANMBK52
340100101B	DBM13W3PF179ANMB DBM13W3PF179ANMBK52
340100101B	DBM17W2PF179ANMB DBM17W2PF179ANMBK52
340100101B	DBM21W1PF179ANMB DBM21W1PF179ANMBK52
340100101B	DCM13W6PF179ANMB DCM13W6PF179ANMBK52
340100101B	DCM17W5PF179ANMB DCM17W5PF179ANMBK52
340100101B	DCM21WA4PF179ANMB DCM21WA4PF179ANMBK52
340100101B	DCM25W3PF179ANMB DCM25W3PF179ANMBK52
340100101B	DCM27W2PF179ANMB DCM27W2PF179ANMBK52
340100101B	DDM24W7PF179ANMB DDM24W7PF179ANMBK52
340100101B	DDM36W4PF179ANMB DDM36W4PF179ANMBK52
340100101B	DDM43W2PF179ANMB DDM43W2PF179ANMBK52
340100101B	DDM47W1PF179ANMB DDM47W1PF179ANMBK52
340100101B	DEM9SNMB DEM9SNMBK52
340100101B	DAM15SNMB DAM15SNMBK52
340100101B	DBM25SNMB DBM25SNMBK52
340100101B	DCM37SNMB DCM37SNMBK52
340100101B	DDM50SNMB DDM50SNMBK52
340100101B	DEM9PNMB DEM9PNMBK52
340100101B	DAM15PNMB DAM15PNMBK52
340100101B	DBM25PNMB DBM25PNMBK52
340100101B	DCM37PNMB DCM37PNMBK52
340100101B	DDM50PNMB DDM50PNMBK52
340100101B	DEM9SOL3NMB DEM9SOL3NMBK52
340100101B	DAM15SOL3NMB DAM15SOL3NMBK52
340100101B	DBM25SOL3NMB DBM25SOL3NMBK52
340100101B	DCM37SOL3NMB DCM37SOL3NMBK52
340100101B	DDM50SOL3NMB DDM50SOL3NMBK52
340100101B	DEM9POL3NMB DEM9POL3NMBK52
340100101B	DAM15POL3NMB DAM15POL3NMBK52
340100101B	DBM25POL3NMB DBM25POL3NMBK52
340100101B	DCM37POL3NMB DCM37POL3NMBK52
340100101B	DDM50POL3NMB DDM50POL3NMBK52
340100101B	DEM9S1AONNMB DEM9S1AONNMBK52
340100101B	DAM15S1AONNMB DAM15S1AONNMBK52
340100101B	DBM25S1AONNMB DBM25S1AONNMBK52
340100101B	DCM37S1AONNMB DCM37S1AONNMBK52
340100101B	DDM50S1AONNMB DDM50S1AONNMBK52
340100101B	DEM9P1AONNMB DEM9P1AONNMBK52
340100101B	DAM15P1AONNMB DAM15P1AONNMBK52
340100101B	DBM25P1AONNMB DBM25P1AONNMBK52
340100101B	DCM37P1AONNMB DCM37P1AONNMBK52
340100101B	DDM50P1AONNMB DDM50P1AONNMBK52
340100101B	DEM9S1A7NNMB DEM9S1A7NNMBK52
340100101B	DAM15S1A7NNMB DAM15S1A7NNMBK52
340100101B	DBM25S1A7NNMB DBM25S1A7NNMBK52
340100101B	DCM37S1A7NNMB DCM37S1A7NNMBK52
340100101B	DDM50S1A7NNMB DDM50S1A7NNMBK52
340100101B	DEM9P1A7NNMB DEM9P1A7NNMBK52
340100101B	DAM15P1A7NNMB DAM15P1A7NNMBK52
340100101B	DBM25P1A7NNMB DBM25P1A7NNMBK52
340100101B	DCM37P1A7NNMB DCM37P1A7NNMBK52
340100101B	DDM50P1A7NNMB DDM50P1A7NNMBK52
340100101B	DEM9S1A9NNMB DEM9S1A9NNMBK52

ESA-SCC Part Number	ITT Cannon Part Number
340100415B	DM115740-13
340100419B	DM115740-12
340100412B	DM115742-15
340100416B	DM115742-14
340100420B	DM115742-13
340100413B	DM115741-7
340100417B	DM115741-8
340100414B	DM115743-20
340100418B	DM115743-22
340102207B	DE-59-20
340102208B	DE-60-20
340102209B	DA-59-20
340102210B	DA-60-20
340102211B	DB-59-20
340102212B	DB-60-20
340102213B	DC-59-20
340102214B	DC-60-20
340102215B	DD-59-20
340102216B	DD-60-20
340102201B	D20418-52
340102206B	D115418-70
340102258B	D20418-101
340102202B	D20419-74
340102203B	D20419-48
340102204B	D20420-67
340102205B	D20420-49
340102244B	D20419-73
340102245B	D20419-84
340102246B	D20420-63
340102247B	D20420-88
340102225B	DA19678-167
340102226B	DB19678-168
340102227B	DC19678-138
340102228B	DD19678-161
340102239B	DE19977-47
340102240B	DA19977-40
340102241B	DB19977-43
340102242B	DC19977-45
340102243B	DD19977-44
340102234B	DE24657-16
340102235B	DA24658-15
340102236B	DB24659-15
340102237B	DC24660-16
340102238B	DD24661-13
340102229B	DE115386-101A
340102230B	DA115386-104A
340102231B	DB115386-102A
340102232B	DC115386-100A
340102233B	DD115386-103A
340100501B	030-8882-002
340100502B	031-8944-000
340100503B	030-8848-020
340100504B	031-8787-020
340100505B	330-8782-001
340100506B	031-8843-001
340100507B	330-8944-000
340100508B	031-8902-000

Panel Mounting

Figure 1A

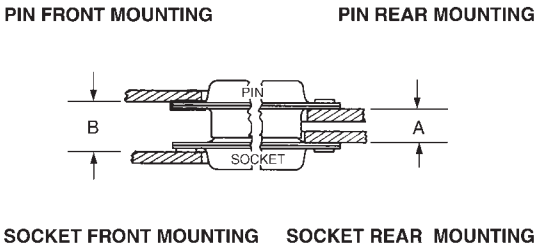

Figure 1B

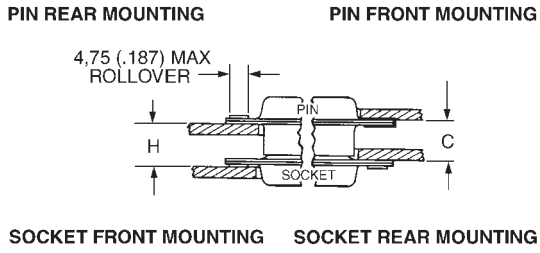

Figure 2

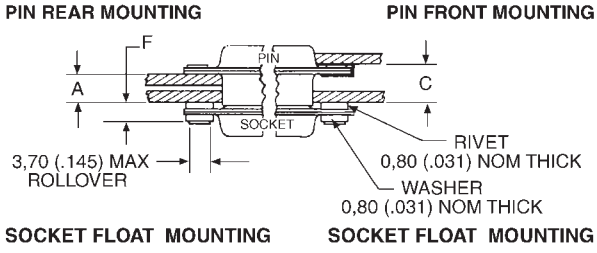

Figure 3

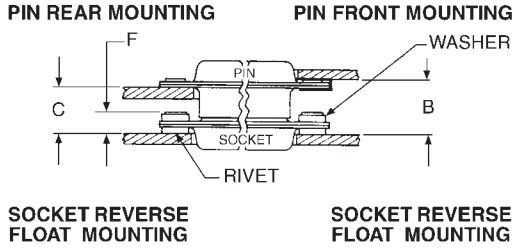

Figure Number	Combination of Mated Connectors			A + 0,76 (.030)	B + 0,76 (.030)	C + 0,76 (.030)	F ± 0,25 (.010)	H + 0,76 (.030)
	Size	Pin (See Note Below)	Socket					
1A, 1B	A, E	Standard	Standard	6,35 (.250)	8,63 (.340)	7,49 (.295)	—	7,49 (.295)
1A, 1B	B, C, D	Standard	Standard	6,04 (.238)	8,71 (.343)	7,56 (.298)	—	7,18 (.283)
2	A, E	Standard	Float Mount	5,53 (.218)	—	6,68 (.263)	3,04 (.120)	—
2	B, C, D	Standard	Float Mount	5,23 (.206)	—	6,75 (.266)	3,04 (.120)	—
2	A, E	Float Mount	Standard	5,53 (.218)	—	6,68 (.263)	3,04 (.120)	—
2	B, C, D	Float Mount	Standard	5,23 (.206)	—	6,37 (.251)	3,30 (.130)	—
3	A, E	Standard	Reverse Float Mount	—	9,09 (.358)	7,95 (.313)	3,04 (.120)	—
3	B, C, D	Standard	Reverse Float Mount	—	9,16 (.361)	7,64 (.301)	3,04 (.120)	—
3	A, E	Reverse Float Mount	Standard	—	9,09 (.358)	7,95 (.313)	3,04 (.120)	—
3	B, C, D	Reverse Float Mount	Standard	—	9,01 (.355)	7,87 (.310)	3,30 (.130)	—

Notes:
1. A, B, C and H are dimensions between panels and represent the recommended limit to be used in the design of the connector mounting method.
2. It is recommended that only one assembly, either pin or socket, be float mounted.
3. Standard pin assemblies contained 0,38 (.015) thick front shells on E and A sizes; 0,61 (.024) thick front shells on B, C, and D sizes.
4. Standard connectors accommodate a #4 screw. Float mount connectors accommodate a #2 screw.

Dimensions shown in mm
Specifications and dimensions subject to change

Panel Cutouts

Standard Cutout

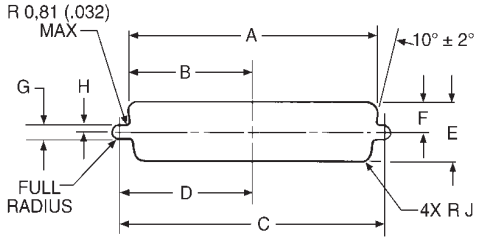

Rear Mounting Cutout (Optional)

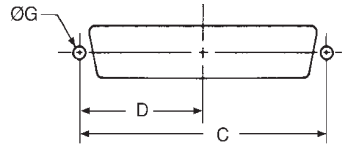

Front Panel Mounting

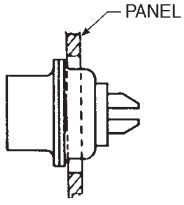

Standard Shell

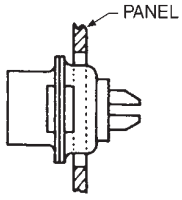

Dual Float Mount Shell

Rear Panel Mounting

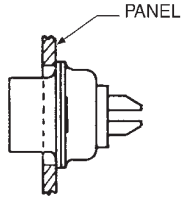

Standard Shell

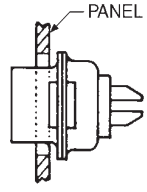

Dual Float Mount Shell

Standard Shell

Shell Size	Mounting Method	A ± 0,13 (.005)	B ± 0,13 (.005)	C ± 0,13 (.005)	D ± 0,13 (.005)	E ± 0,13 (.005)	F ± 0,13 (.005)	G ± 0,05 (.002)	H ± 0,05 (.002)	J ± 0,05 (.002)
DE	Front	22,19 (.874)	11,09 (.437)	24,99 (.984)	12,49 (.492)	13,03 (.513)	6,52 (.257)	3,04 (.120)	1,52 (.060)	2,10 (.083)
	Rear	20,47 (.806)	10,23 (.403)	24,99 (.984)	12,49 (.492)	11,40 (.449)	5,71 (.225)	3,04 (.120)	1,52 (.060)	3,35 (.132)
DA	Front	30,53 (1.202)	15,26 (.601)	33,32 (1.312)	16,66 (.656)	13,03 (.513)	6,52 (.257)	3,04 (.120)	1,52 (.060)	2,10 (.083)
	Rear	28,80 (1.134)	14,40 (.567)	33,32 (1.312)	16,66 (.656)	11,40 (.449)	5,71 (.225)	3,04 (.120)	1,52 (.060)	3,35 (.132)
DB	Front	44,27 (1.743)	22,14 (.872)	47,04 (1.852)	23,52 (.926)	13,03 (.513)	6,52 (.257)	3,04 (.120)	1,52 (.060)	2,10 (.083)
	Rear	42,51 (1.674)	21,25 (.837)	47,04 (1.852)	23,52 (.926)	11,40 (.449)	5,71 (.225)	3,04 (.120)	1,52 (.060)	3,35 (.132)
DC	Front	60,73 (2.391)	30,37 (1.196)	63,50 (2.500)	31,75 (1.250)	13,03 (.513)	6,52 (.257)	3,04 (.120)	1,52 (.060)	2,10 (.083)
	Rear	59,08 (2.326)	29,54 (1.163)	63,50 (2.500)	31,75 (1.250)	11,40 (.449)	5,71 (.225)	3,04 (.120)	1,52 (.060)	3,35 (.132)
DD	Front	58,34 (2.297)	29,18 (1.149)	61,11 (2.406)	30,55 (1.203)	15,82 (.623)	7,92 (.312)	3,04 (.120)	1,52 (.060)	2,10 (.083)
	Rear	56,33 (2.218)	28,16 (1.109)	61,11 (2.406)	30,55 (1.203)	14,09 (.555)	7,06 (.278)	3,04 (.120)	1,52 (.060)	3,35 (.132)

Dual Float Mount Shell

Shell Size	Mounting Method	A ± 0,13 (.005)	B ± 0,13 (.005)	C ± 0,13 (.005)	D ± 0,13 (.005)	E ± 0,13 (.005)	F ± 0,13 (.005)	G ± 0,05 (.002)	H ± 0,05 (.002)	J ± 0,05 (.002)
DE	Front	23,01 (.906)	11,50 (.453)	24,99 (.984)	12,49 (.492)	13,84 (.545)	6,93 (.273)	2,23 (.088)	1,11 (.044)	2,10 (.083)
	Rear	21,28 (.838)	10,64 (.419)	24,99 (.984)	12,49 (.492)	12,21 (.481)	6,12 (.241)	2,23 (.088)	1,11 (.044)	3,35 (.132)
DA	Front	31,34 (1.234)	15,67 (.617)	33,32 (1.312)	16,66 (.656)	13,84 (.545)	6,93 (.273)	2,23 (.088)	1,11 (.044)	2,10 (.083)
	Rear	29,61 (1.166)	14,80 (.583)	33,32 (1.312)	16,66 (.656)	12,21 (.481)	6,12 (.241)	2,23 (.088)	1,11 (.044)	3,35 (.132)
DB	Front	45,08 (1.775)	22,55 (.888)	47,04 (1.852)	23,52 (.926)	13,84 (.545)	6,93 (.273)	2,23 (.088)	1,11 (.044)	2,10 (.083)
	Rear	43,33 (1.706)	21,66 (.853)	47,04 (1.852)	23,52 (.926)	12,21 (.481)	6,12 (.241)	2,23 (.088)	1,11 (.044)	3,35 (.132)
DC	Front	61,54 (2.423)	30,78 (1.212)	63,50 (2.500)	31,75 (1.250)	13,84 (.545)	6,93 (.273)	2,23 (.088)	1,11 (.044)	2,10 (.083)
	Rear	59,79 (2.354)	29,89 (1.177)	63,50 (2.500)	31,75 (1.250)	12,21 (.481)	6,12 (.241)	2,23 (.088)	1,11 (.044)	3,35 (.132)
DD	Front	59,15 (2.329)	29,59 (1.165)	61,11 (2.406)	30,55 (1.203)	16,63 (.655)	8,33 (.328)	2,23 (.088)	1,11 (.044)	2,10 (.083)
	Rear	57,15 (2.250)	28,57 (1.125)	61,11 (2.406)	30,55 (1.203)	14,90 (.587)	7,46 (.294)	2,23 (.088)	1,11 (.044)	3,35 (.132)

Plug Contact Cavity Arrangements

Face View Pin Insert



Shell Size	E	E	E	A	A	A	A
Contact Arrangement	2W2	2WK2	5W1	3W3	3WK3	7W2	11W1
No. of Size 20 Cavities	0#20	0#20	4#20	0#20	0#20	5#20	10#20
No. of Size 8 Cavities	2#8	2#8	1#8	3#8	3#8	2#8	1#8



Shell Size	B	B	B
Contact Arrangement	5W54	9W4	13W3
No. of Size 20 Cavities	0#20	5#20	10#20
No. of Size 8 Cavities	5#8	4#8	3#8



Shell Size	B	B
Contact Arrangement	17W2	21W1
No. of Size 20 Cavities	15#20	20#20
No. of Size 8 Cavities	2#8	1#8

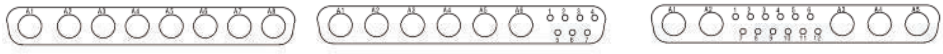

Shell Size	C	C	C
Contact Arrangement	8W8	13W6	17W5
No. of Size 20 Cavities	0#20	7#20	12#20
No. of Size 8 Cavities	8#8	6#8	5#8



Shell Size	C	C	C
Contact Arrangement	21WA4	25W3	27W2
No. of Size 20 Cavities	17#20	22#20	25#20
No. of Size 8 Cavities	4#8	3#8	2#8



Shell Size	D	D
Contact Arrangement	24W7	36W4
No. of Size 20 Cavities	17#20	32#20
No. of Size 8 Cavities	7#8	4#8



Shell Size	D	D
Contact Arrangement	43W2	47W1
No. of Size 20 Cavities	41#20	46#20
No. of Size 8 Cavities	2#8	1#8

Dimensions shown in mm
Specifications and dimensions subject to change

Receptacle Contact Cavity Arrangements

Face View Socket Insert



Shell Size	E	E	E	A	A	A	A
Contact Arrangement	2W2	2WK2	5W1	3W3	3WK3	7W2	11W1
No. of Size 20 Cavities	0#20	0#20	4#20	0#20	0#20	5#20	10#20
No. of Size 8 Cavities	2#8	2#8	1#8	3#8	3#8	2#8	1#8



Shell Size	B	B	B
Contact Arrangement	5W5	9W4	13W3
No. of Size 20 Cavities	0#20	5#20	10#20
No. of Size 8 Cavities	5#8	4#8	3#8



Shell Size	B	B
Contact Arrangement	17W2	21W1
No. of Size 20 Cavities	15#20	20#20
No. of Size 8 Cavities	2#8	1#8

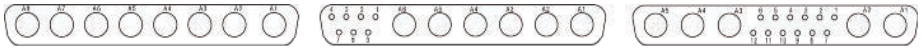

Shell Size	C	C	C
Contact Arrangement	8W8	13W6	17W5
No. of Size 20 Cavities	0#20	7#20	12#20
No. of Size 8 Cavities	8#8	6#8	5#8

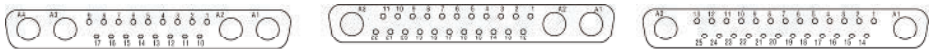

Shell Size	C	C	C
Contact Arrangement	21WA4	25W3	27W2
No. of Size 20 Cavities	17#20	22#20	25#20
No. of Size 8 Cavities	4#8	3#8	2#8



Shell Size	D	D
Contact Arrangement	24W7	36W4
No. of Size 20 Cavities	17#20	32#20
No. of Size 8 Cavities	7#8	4#8



Shell Size	D	D
Contact Arrangement	43W2	47W1
No. of Size 20 Cavities	41#20	46#20
No. of Size 8 Cavities	2#8	1#8

Pushfit/Boardlock — Standard

Straight (Z)

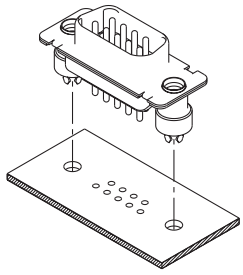

90˚(C)

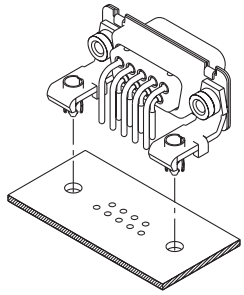

Pushfit/Boardlock — European

Straight (-146) 3.0 mm dia
Straight (-161) 3.2 mm dia.

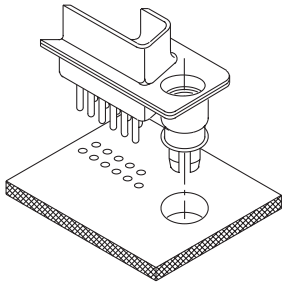

90˚(-146) 3.0 mm dia.
90˚(-162) 3.2 mm dia.

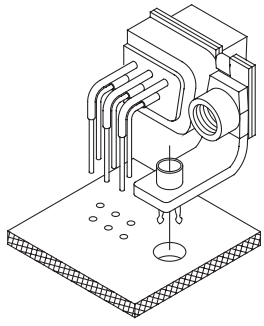

Alternate 50 Ohm Coaxial Configuration

Straight (X)

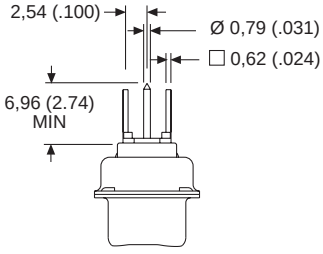

90˚ (X)

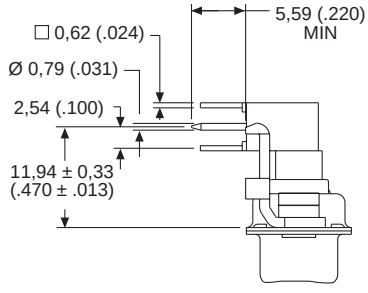

Dimensions shown in mm
Specifications and dimensions subject to change

www.ittcannon.com

Hardware Views (Standard)

Through Hole (Eyelet)

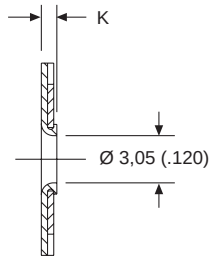

Tab Shells (K)

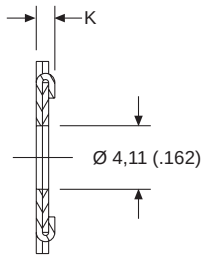

Clinch Nut (E)

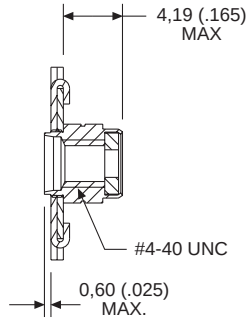

Dimensions — Plug

Shell Size	K ± 0,317 (.0125)	K ± 0,25 (.010)
DE	1,206 (.0475)	—
DA	1,206 (.0475)	—
DB	—	1,52 (.060)
DC	—	1,52 (.060)
DD	—	1,52 (.060)

Dimensions — Receptacle

Shell Size	K ± 0,318 (.0125)
DE	1,206 (.0475)
DA	1,206 (.0475)
DB	1,206 (.0475)
DC	1,206 (.0475)
DD	1,206 (.0475)

Dual Float Mount (Y)

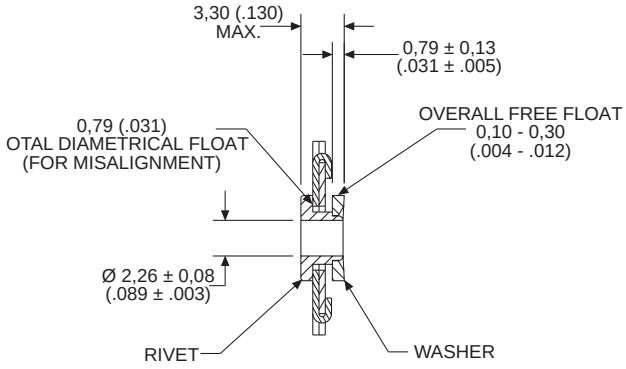

Alternate Bracket Configuration

Supplied with connectors without boardlocks.

Standard Footprint (P)

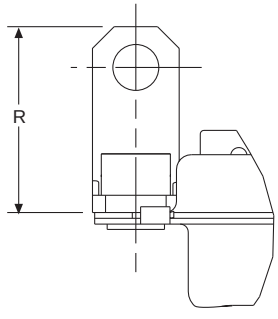

European Footprint (P)

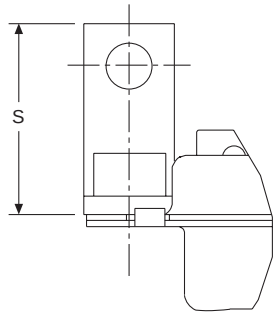

Dimensions

Shell Size	R ± 0,25 (.010)	S ± 0,25 (.010)
DE, DA, DB, DC	11,61 (.457)	12,78 (.503)
DD	12,78 (.503)	13,95 (.549)

Hardware Views (European)

Through Hole

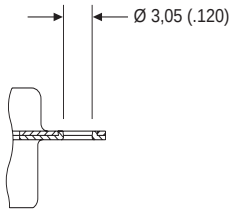

Clinch Nut (X/E)

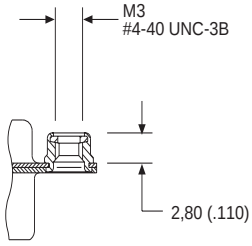

Plastic Bracket with Bushing (1A5N)

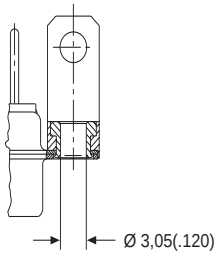

Plastic Bracket with Captive Nut (1ATN/1AWN) (M3/4-40)
Above with grounding strap (1AUN/1AVN) (M3/4-40)

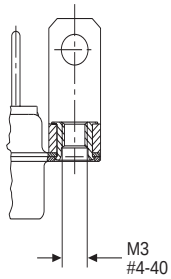

Plastic Bracket with Post (1APN/1A6N)(M3/4-40)

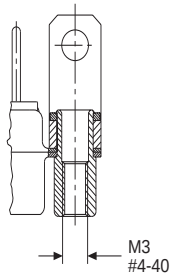

Metal Bracket with Bushing (1AFN)

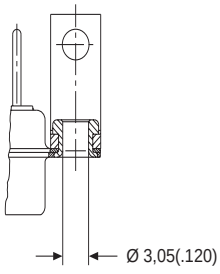

Metal Bracket with Captive Nut (1A9N/1A7N) (M3/4-40)

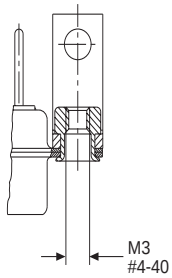

Metal Bracket with Post (1AHN/1A8N) (M3/4-40)

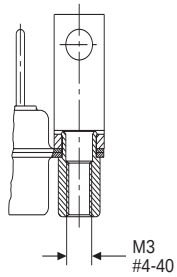

Dimensions shown in mm
Specifications and dimensions subject to change

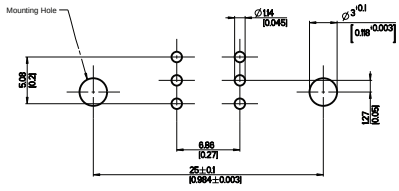

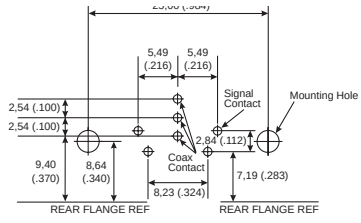

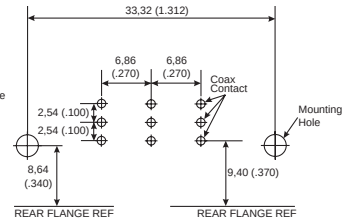

	E	E	A
Shell Size	2W2/2WK2	5W1	3W3/3WK3
Contact Arrangement	0 #20	4 #20	0 #20
No. of Size 20 Cavities	2 #8	1 #8	3 #8
No. of Size 8 Cavities			

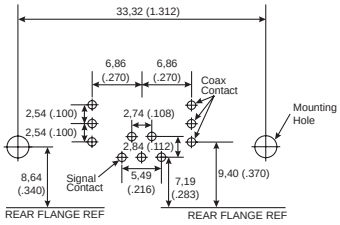

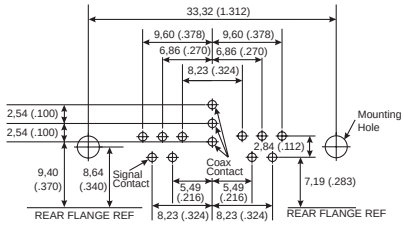

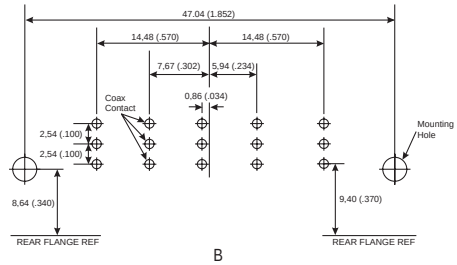

	A	A	B
Shell Size	7W2	11W1	5W5
Contact Arrangement	5 #20	10 #20	0 #20
No. of Size 20 Cavities	2 #8	1 #8	5 #8
No. of Size 8 Cavities			

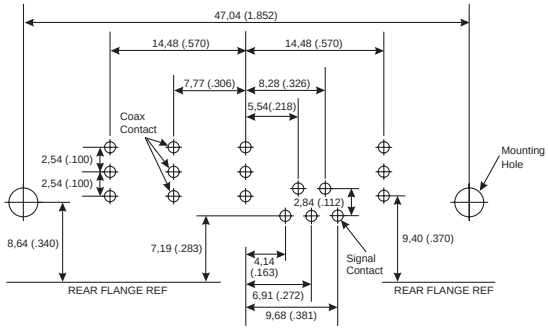

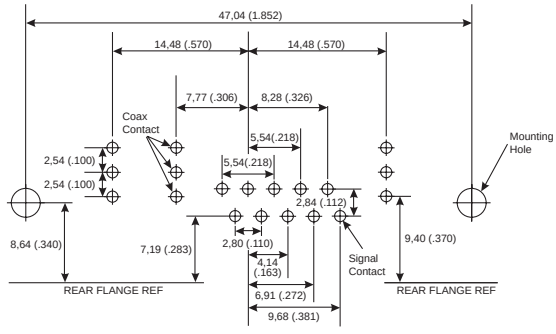

	B	B
Shell Size	9W4	13W3
Contact Arrangement	5 #20	10 #20
No. of Size 20 Cavities	4 #8	3 #8
No. of Size 8 Cavities		

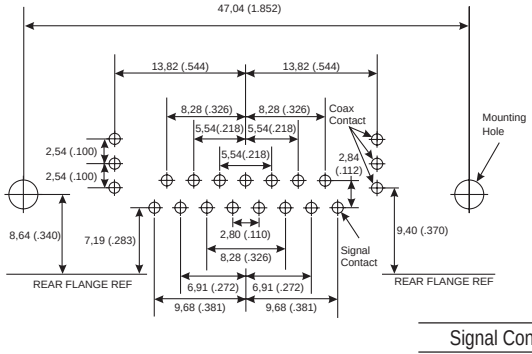

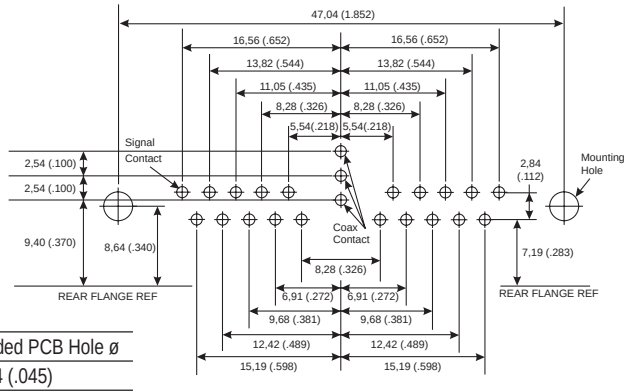

	B	B
Shell Size	17W2	21W1
Contact Arrangement	15 #20	20 #20
No. of Size 20 Cavities	2 #8	1 #8
No. of Size 8 Cavities		

Signal Contact ø	Recommended PCB Hole ø
0,76 (.030)	1,14 (.045)

Mounting Type	Recommended PCB Hole ø
Without Boardlock	3,05 (.120)
With Boardlock	3,10 (.122)

Size 8 Contact Type	Recommended PCB Hole ø
Coaxial (C or X)	1,14 (.045)

Dimensions shown in mm

Specifications and dimensions subject to change

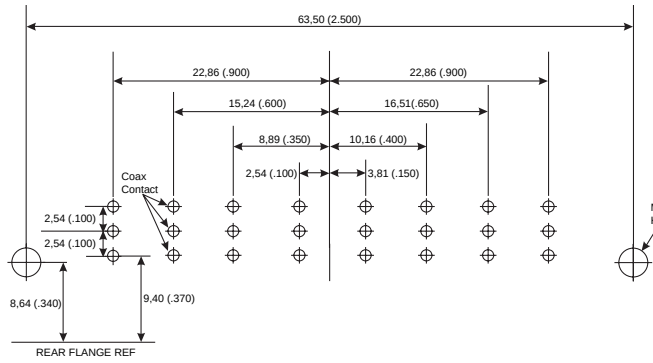

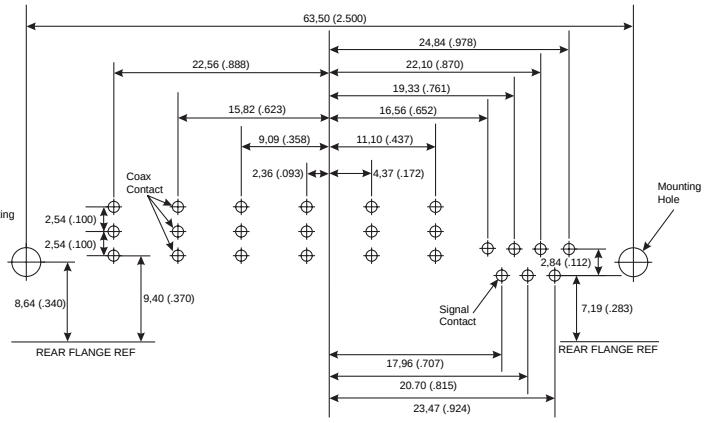

Shell Size	C	C
Contact Arrangement	8W8	13W6
No. of Size 20 Cavities	0 #20	7 #20
No. of Size 8 Cavities	8 #8	6 #8

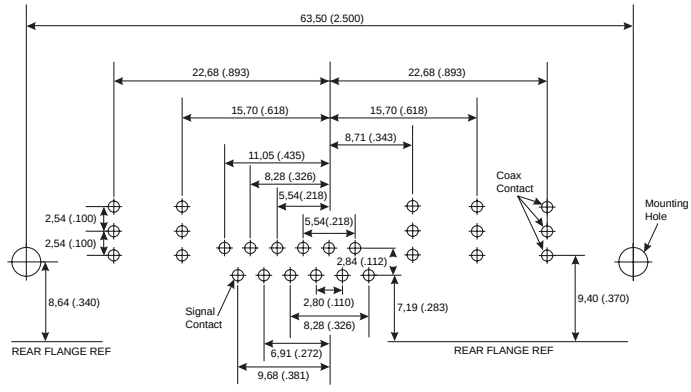

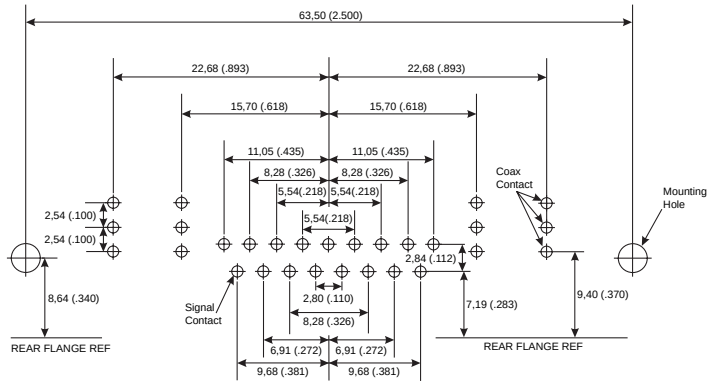

Shell Size	C	C
Contact Arrangement	17W5	21WA4
No. of Size 20 Cavities	12 #20	17 #20
No. of Size 8 Cavities	5 #8	4 #8

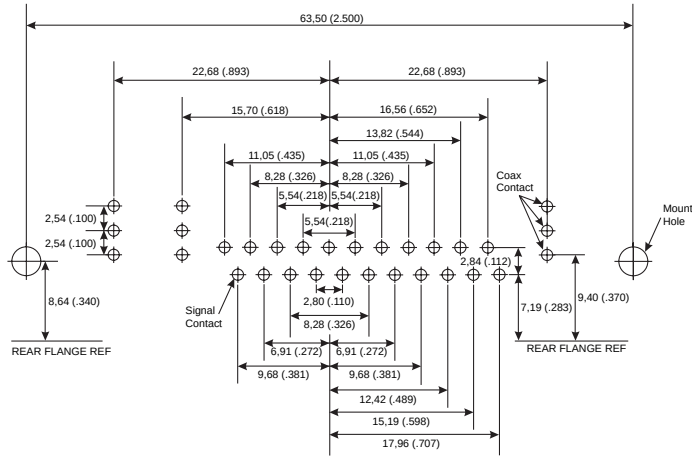

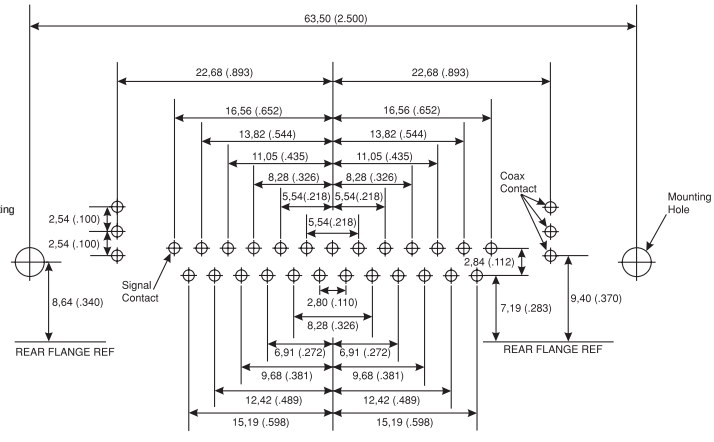

Shell Size	C	C
Contact Arrangement	25W3	27W2
No. of Size 20 Cavities	22 #20	25 #20
No. of Size 8 Cavities	3 #8	2 #8

Signal Contact ø	Recommended PCB Hole ø
0,76 (.030)	1,14 (.045)

Mounting Typ	Recommended PCB Hole ø
Without Boardlock	3,05 (.120)
With Boardlock	3,10 (.122)

Size 8 Contact Type	Recommended PCB Hole ø
Coaxial (C or X)	1,14 (.045)

Dimensions shown in mm

Specifications and dimensions subject to change

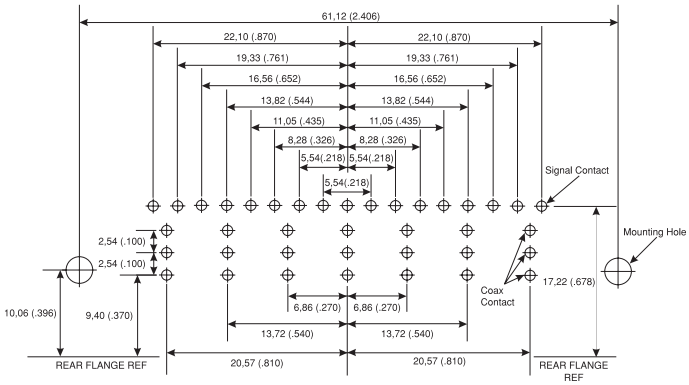

	D
Shell Size	D
Contact Arrangement	24W7
No. of Size 20 Cavities	17 #20
No. of Size 8 Cavities	7 #8

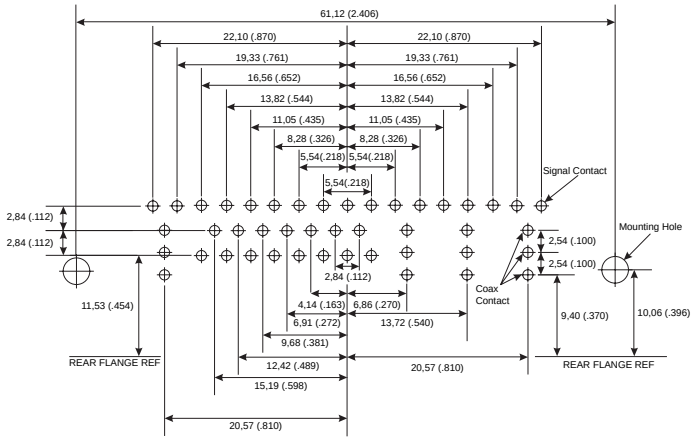

	D
Shell Size	D
Contact Arrangement	36W4
No. of Size 20 Cavities	32 #20
No. of Size 8 Cavities	4 #8

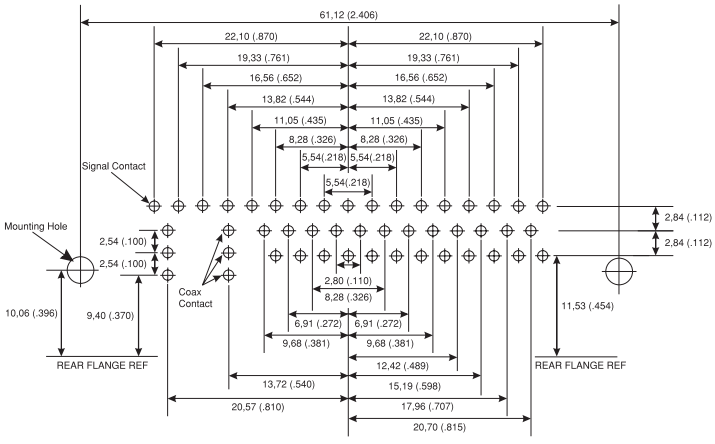

	D
Shell Size	D
Contact Arrangement	43W2
No. of Size 20 Cavities	41 #20
No. of Size 8 Cavities	2 #20

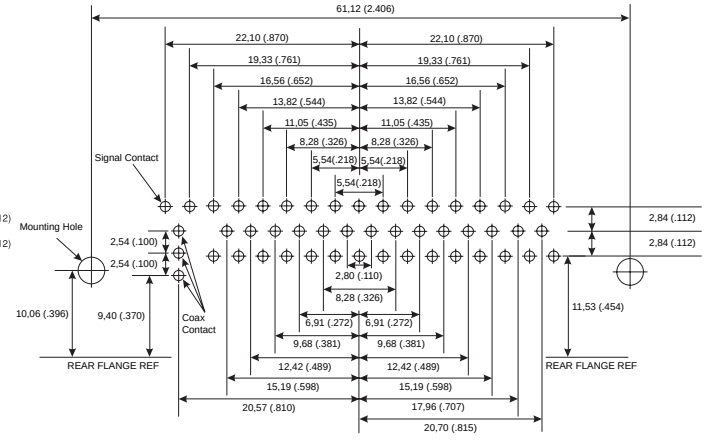

	D
Shell Size	D
Contact Arrangement	47W1
No. of Size 20 Cavities	46 #20
No. of Size 8 Cavities	1 #20

Signal Contact ø	Recommended PCB Hole ø
0,76 (.030)	1,14 (.045)

Mounting Type	Recommended PCB Hole ø
Without Boardlock	3,05 (.120)
With Boardlock	3,10 (.122)

Size 8 Contact Type	Recommended PCB Hole ø
Coaxial (C or X)	1,14 (.045)

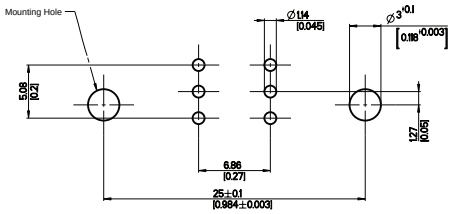

Shell Size	E
Contact Arrangement	2W2/2WK2
No. of Size 20 Cavities	0 #20
No. of Size 8 Cavities	2 #8

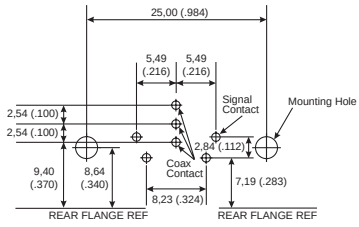

Shell Size	E
Contact Arrangement	5W1
No. of Size 20 Cavities	4 #20
No. of Size 8 Cavities	1 #8

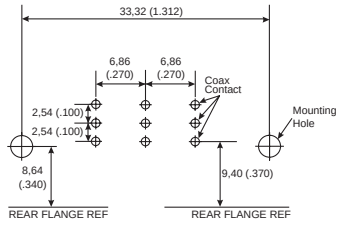

Shell Size	A
Contact Arrangement	3W3/3WK3
No. of Size 20 Cavities	0 #20
No. of Size 8 Cavities	3 #8

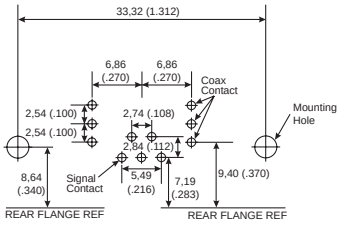

Shell Size	A
Contact Arrangement	7W2
No. of Size 20 Cavities	5 #20
No. of Size 8 Cavities	2 #8

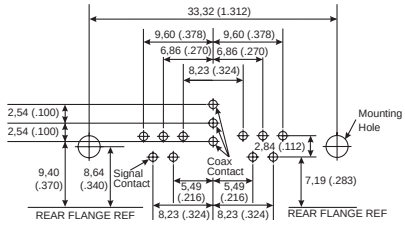

Shell Size	A
Contact Arrangement	11W1
No. of Size 20 Cavities	10 #20
No. of Size 8 Cavities	1 #8

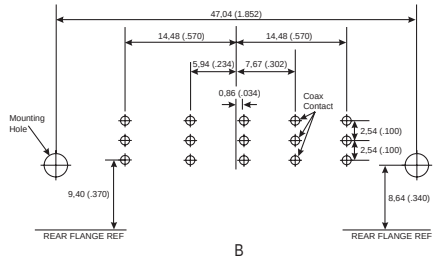

Shell Size	B
Contact Arrangement	5W5
No. of Size 20 Cavities	0 #20
No. of Size 8 Cavities	5 #8

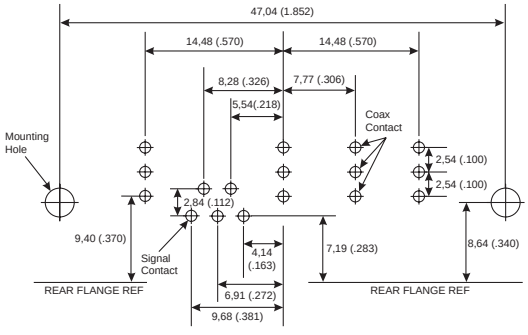

Shell Size	B
Contact Arrangement	9W4
No. of Size 20 Cavities	5 #20
No. of Size 8 Cavities	4 #8

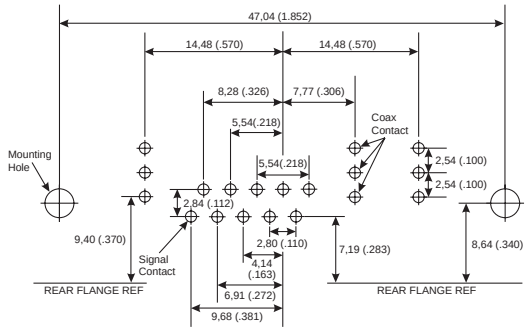

Shell Size	B
Contact Arrangement	13W3
No. of Size 20 Cavities	10 #20
No. of Size 8 Cavities	3 #8

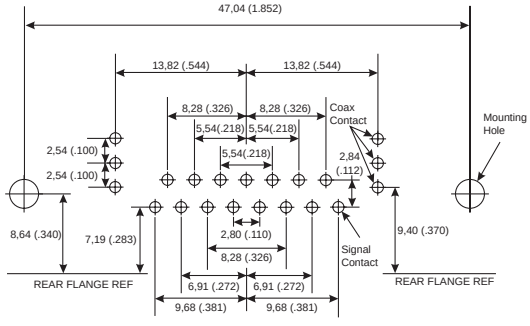

Shell Size	B
Contact Arrangement	17W2
No. of Size 20 Cavities	15 #20
No. of Size 8 Cavities	2 #8

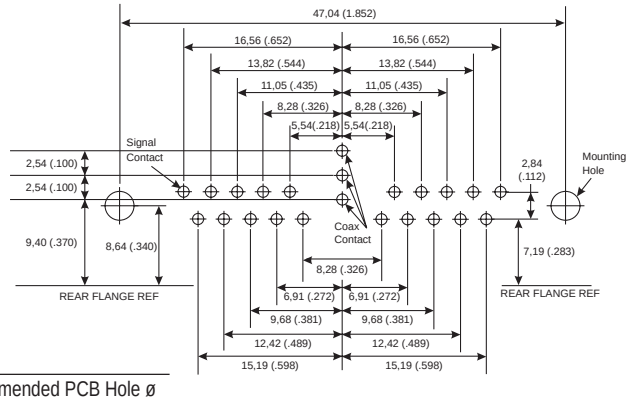

Shell Size	B
Contact Arrangement	21W1
No. of Size 20 Cavities	20 #20
No. of Size 8 Cavities	1 #8

Signal Contact ø	Recommended PCB Hole ø
0,76 (.030)	1,14 (.045)

Mounting Type	Recommended PCB Hole ø
Without Boardlock	3,05 (.120)
With Boardlock	3,10 (.122)

Size 8 Contact Type	Recommended PCB Hole ø
Coaxial (C or X)	1,14 (.045)

Dimensions shown in mm
Specifications and dimensions subject to change

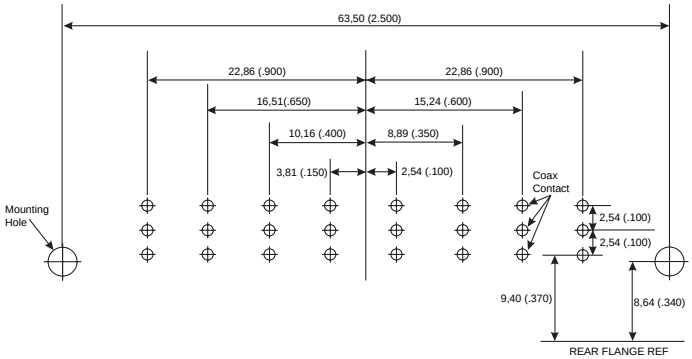

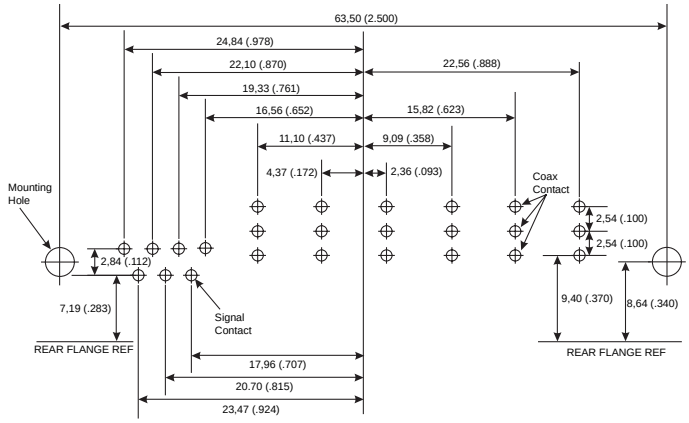

Shell Size	C	C
Contact Arrangement	8W8	13W6
No. of Size 20 Cavities	0 #20	7 #20
No. of Size 8 Cavities	8 #8	6 #8

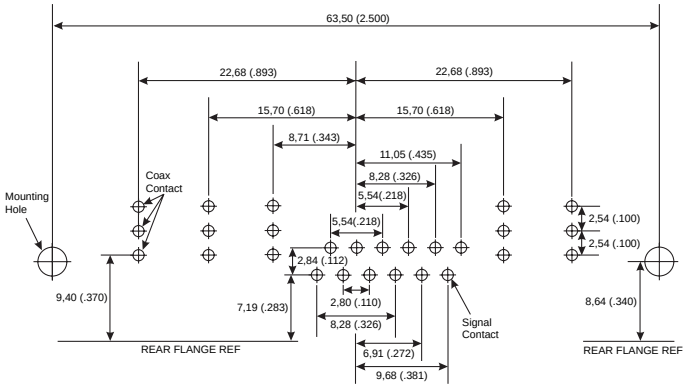

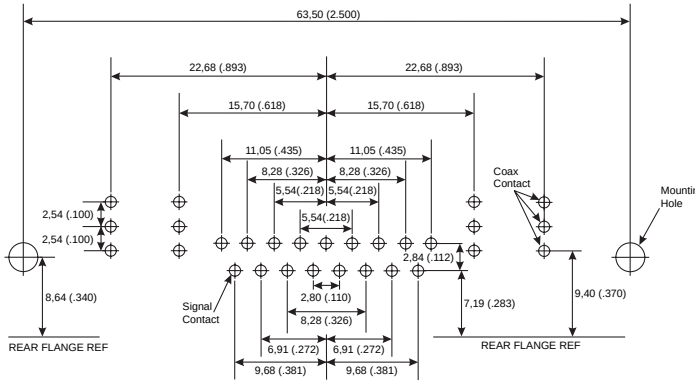

Shell Size	C	C
Contact Arrangement	17W5	21WA4
No. of Size 20 Cavities	12 #20	17 #20
No. of Size 8 Cavities	5 #8	4 #8

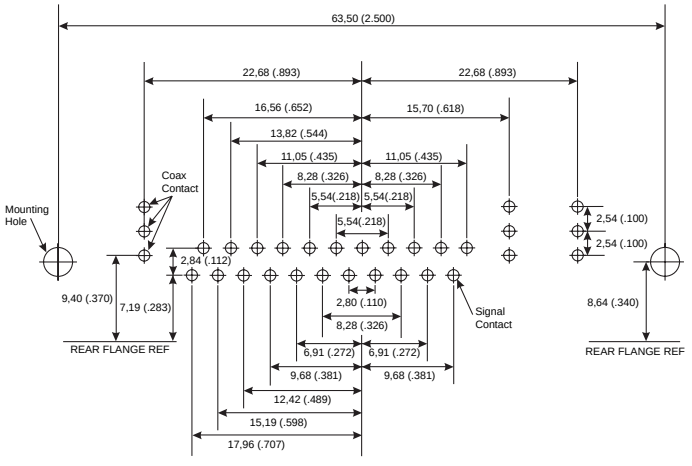

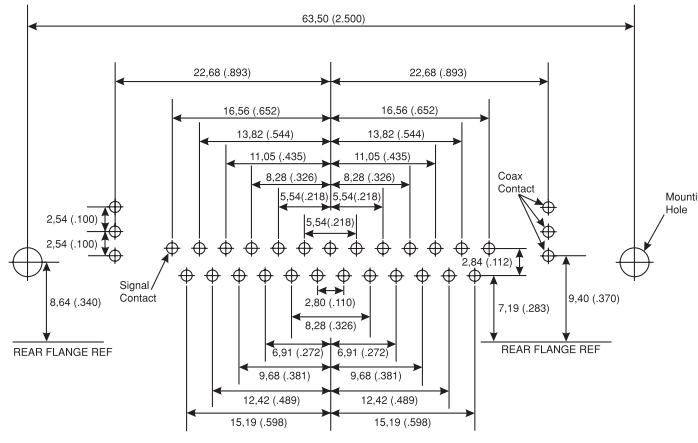

Shell Size	C	C
Contact Arrangement	25W3	27W2
No. of Size 20 Cavities	22 #20	25 #20
No. of Size 8 Cavities	3 #8	2 #8

Signal Contact ø	Recommended PCB Hole ø
0,76 (.030)	1,14 (.045)

Mounting Type	Recommended PCB Hole ø
Without Boardlock	3,05 (.120)
With Boardlock	3,10 (.122)

Size 8 Contact Type	Recommended PCB Hole ø
Coaxial (C or X)	1,14 (.045)

ITT

Dimensions shown in mm
Specifications and dimensions subject to change

www.ittcannon.com

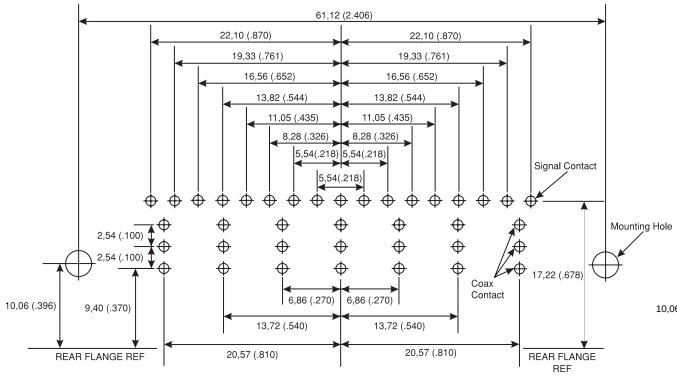

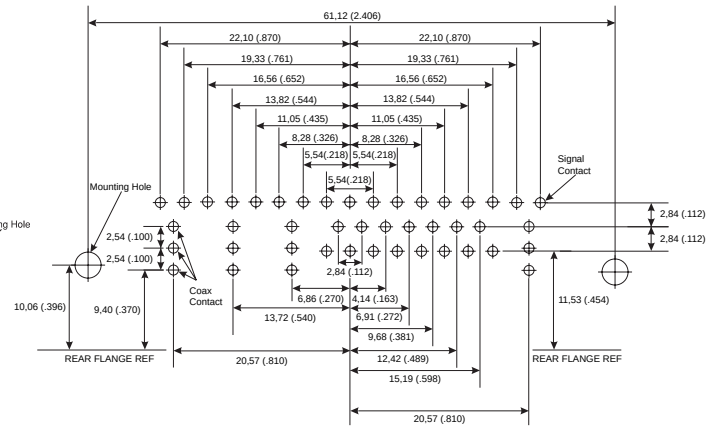

Shell Size	D	D
Contact Arrangement	24W7	36W4
No. of Size 20 Cavities	17 #20	32 #20
No. of Size 8 Cavities	7 #8	4 #8

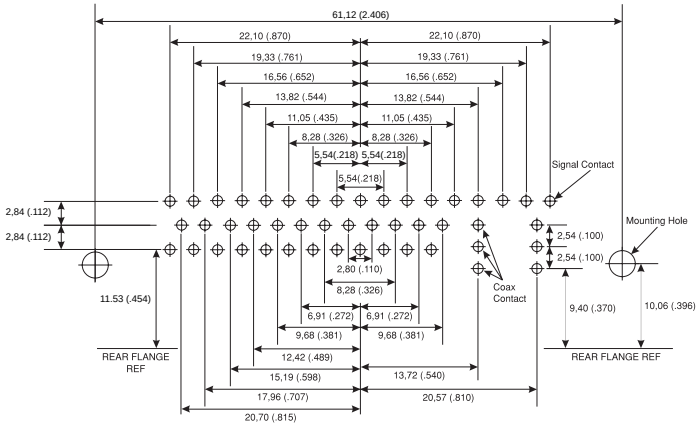

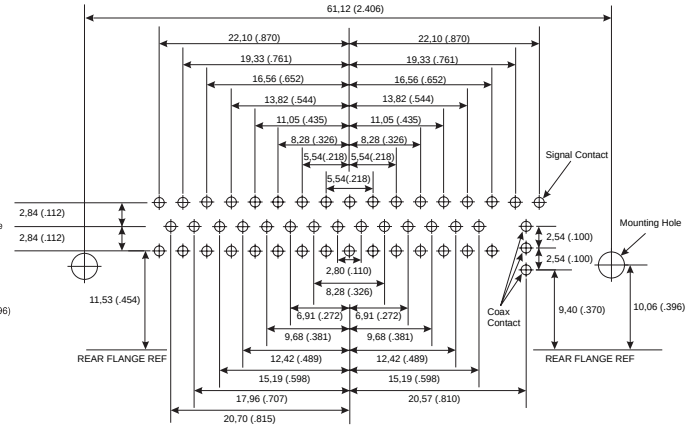

Shell Size	D	D
Contact Arrangement	43W2	47W1
No. of Size 20 Cavities	41 #20	46 #20
No. of Size 8 Cavities	2 #8	1 #8

Signal Contact ø	Recommended PCB Hole ø
0,76 (.030)	1,14 (.045)

Mounting Type	Recommended PCB Hole ø
Without Boardlock	3,05 (.120)
With Boardlock	3,10 (.122)

Size 8 Contact Type	Recommended PCB Hole ø
Coaxial (C or X)	1,14 (.045)

Dimensions shown in mm
Specifications and dimensions subject to change

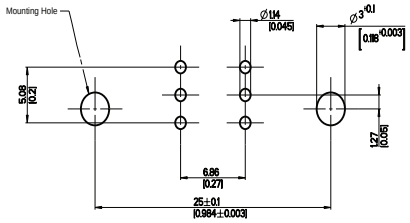

Shell Size	E
Contact Arrangement	2W2/2WK2
No. of Size 20 Cavities	0 #20
No. of Size 8 Cavities	2 #8

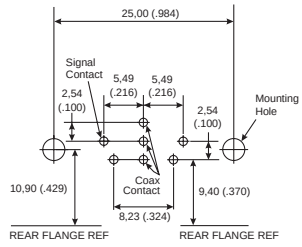

Shell Size	E
Contact Arrangement	5W1
No. of Size 20 Cavities	4 #20
No. of Size 8 Cavities	1 #8

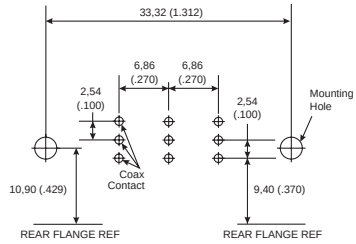

Shell Size	A
Contact Arrangement	3W3/3WK3
No. of Size 20 Cavities	0 #20
No. of Size 8 Cavities	3 #8

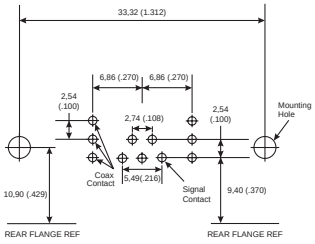

Shell Size	A
Contact Arrangement	7W2
No. of Size 20 Cavities	5 #20
No. of Size 8 Cavities	2 #8

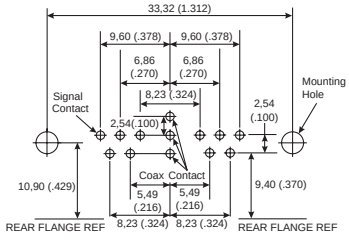

Shell Size	A
Contact Arrangement	11W1
No. of Size 20 Cavities	10 #20
No. of Size 8 Cavities	1 #8

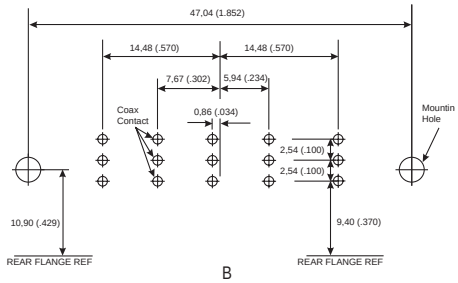

Shell Size	B
Contact Arrangement	5W5
No. of Size 20 Cavities	0 #20
No. of Size 8 Cavities	5 #8

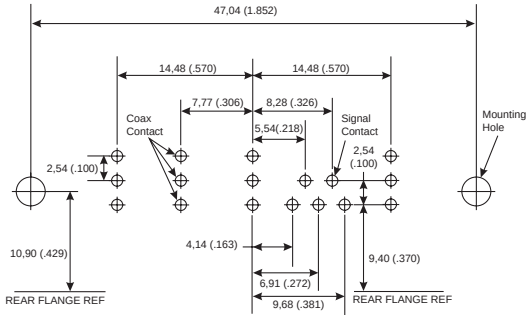

Shell Size	B
Contact Arrangement	9W4
No. of Size 20 Cavities	5 #20
No. of Size 8 Cavities	4 #8

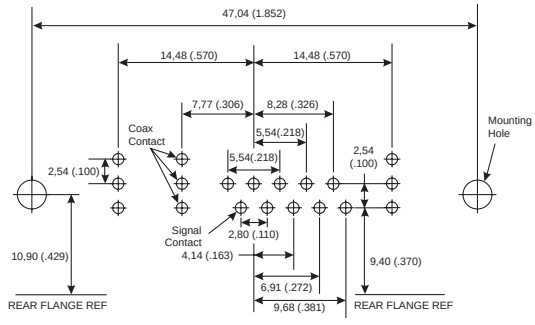

Shell Size	B
Contact Arrangement	13W3
No. of Size 20 Cavities	10 #20
No. of Size 8 Cavities	3 #8

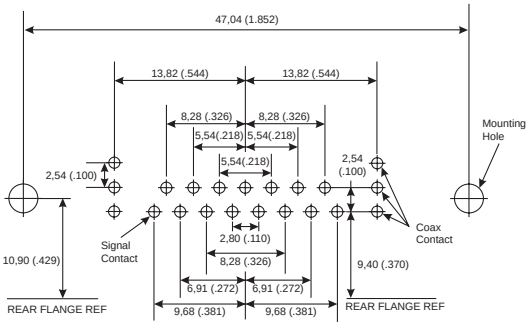

Shell Size	B
Contact Arrangement	17W2
No. of Size 20 Cavities	15 #20
No. of Size 8 Cavities	2 #8

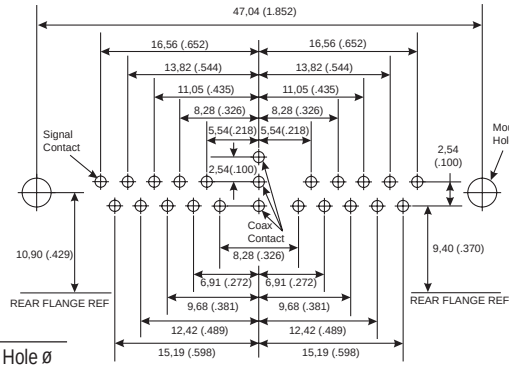

Shell Size	B
Contact Arrangement	21W1
No. of Size 20 Cavities	20 #20
No. of Size 8 Cavities	1 #8

Signal Contact ø	Recommended PCB Hole ø
0,60 (.024)	1,00 (.039)

Mounting Type	Recommended PCB Hole ø
Without Boardlock	3,05 (.120)
With Boardlock	3,10 (.122)

Size 8 Contact Type	Recommended PCB Hole ø
Coaxial (C or X)	1,14 (.045)

ITT

Dimensions shown in mm
Specifications and dimensions subject to change

www.ittcannon.com

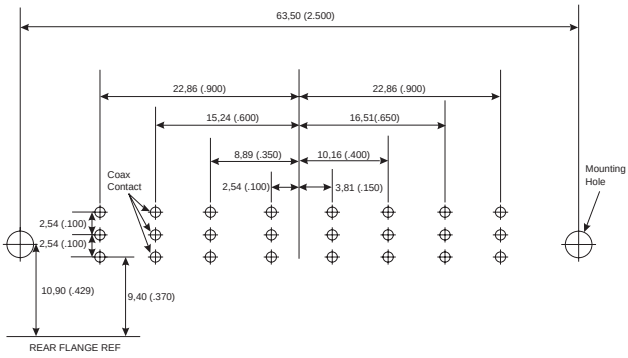

Shell Size	C
Contact Arrangement	8W8
No. of Size 20 Cavities	0 #20
No. of Size 8 Cavities	8 #8

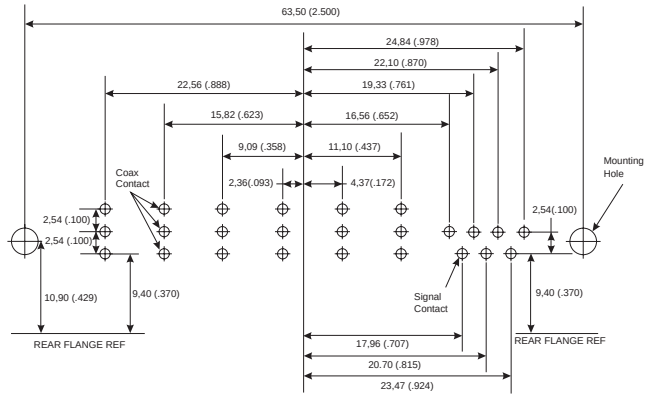

C	
13W6	
7 #20	
6 #8	

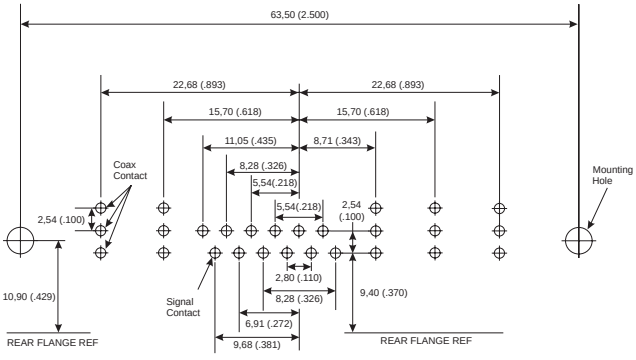

Shell Size	C
Contact Arrangement	17W5
No. of Size 20 Cavities	12 #20
No. of Size 8 Cavities	5 #8

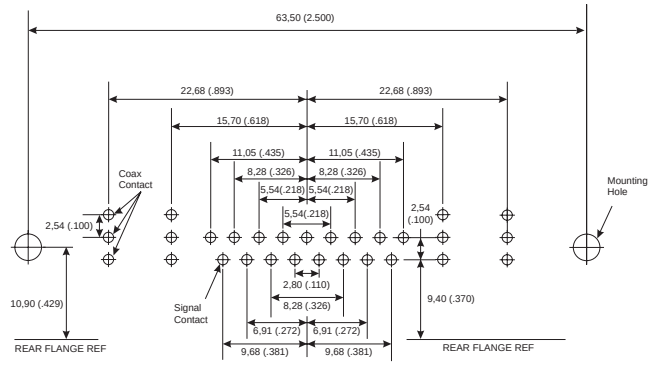

C	
21WA4	
17 #20	
4 #8	

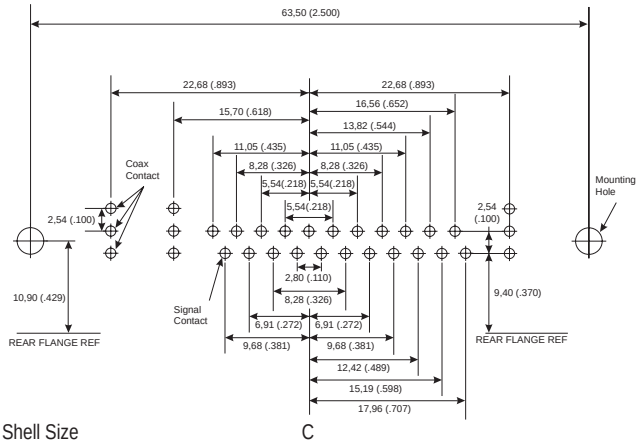

Shell Size	C
Contact Arrangement	25W3
No. of Size 20 Cavities	22 #20
No. of Size 8 Cavities	3 #8

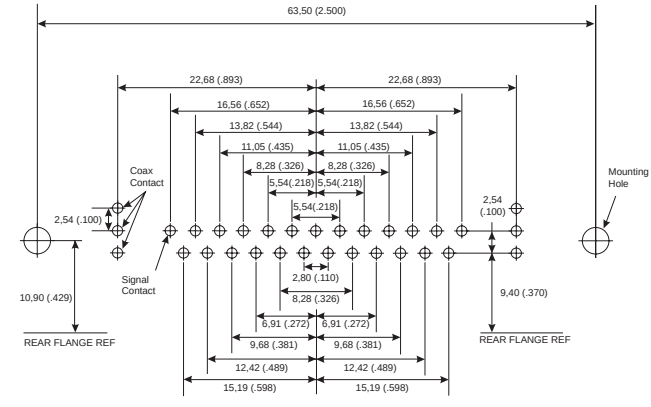

C	
27W2	
25 #20	
2 #8	

Signal Contact ø	Recommended PCB Hole ø
0,60 (.024)	1,00 (.039)

Mounting Type	Recommended PCB Hole ø
Without Boardlock	3,05 (.120)
With Boardlock	3,10 (.122)

Size 8 Contact Type	Recommended PCB Hole ø

Dimensions shown in mm
Specifications and dimensions subject to change

www.ittcannon.com

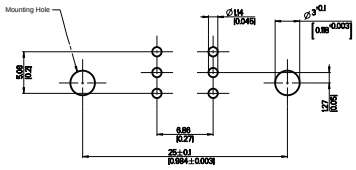

Shell Size	E
Contact Arrangement	2W2/2WK2
No. of Size 20 Cavities	0 #20
No. of Size 8 Cavities	2 #8

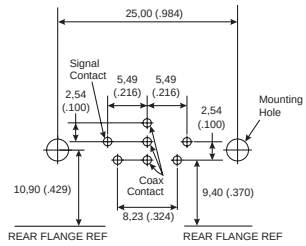

Shell Size	E
Contact Arrangement	5W1
No. of Size 20 Cavities	4 #20
No. of Size 8 Cavities	1 #8

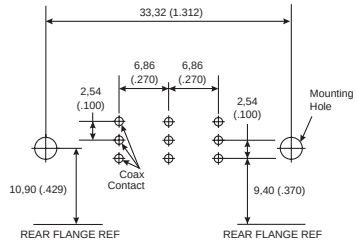

Shell Size	A
Contact Arrangement	3W3/3WK3
No. of Size 20 Cavities	0 #20
No. of Size 8 Cavities	3 #8

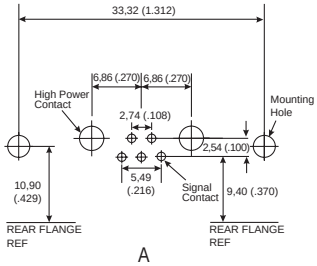

Shell Size	A
Contact Arrangement	7W2
No. of Size 20 Cavities	5 #20
No. of Size 8 Cavities	2 #8

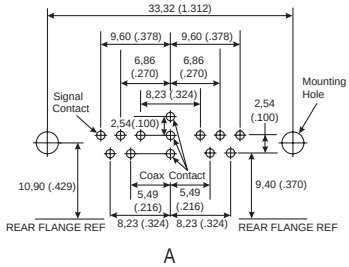

Shell Size	A
Contact Arrangement	11W1
No. of Size 20 Cavities	10 #20
No. of Size 8 Cavities	1 #8

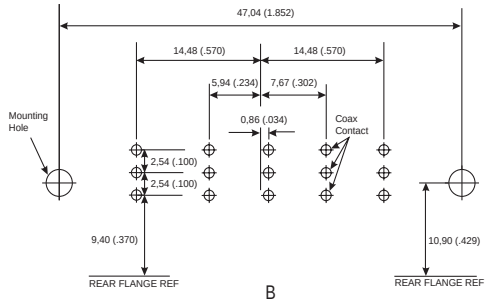

Shell Size	B
Contact Arrangement	5W5
No. of Size 20 Cavities	0 #20
No. of Size 8 Cavities	5 #8

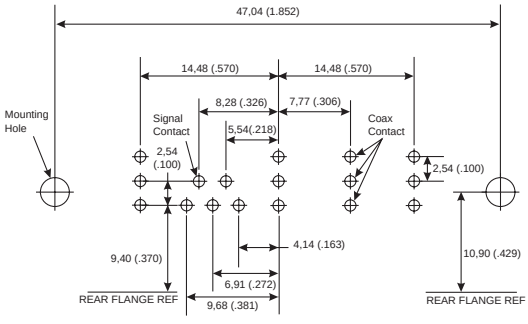

Shell Size	B
Contact Arrangement	9W4
No. of Size 20 Cavities	5 #20
No. of Size 8 Cavities	4 #8

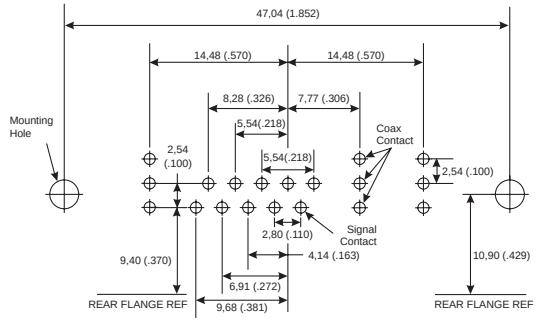

Shell Size	B
Contact Arrangement	13W3
No. of Size 20 Cavities	10 #20
No. of Size 8 Cavities	3 #8

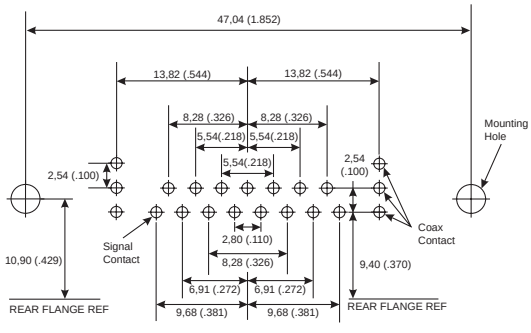

Shell Size	B
Contact Arrangement	17W2
No. of Size 20 Cavities	15 #20
No. of Size 8 Cavities	2 #8

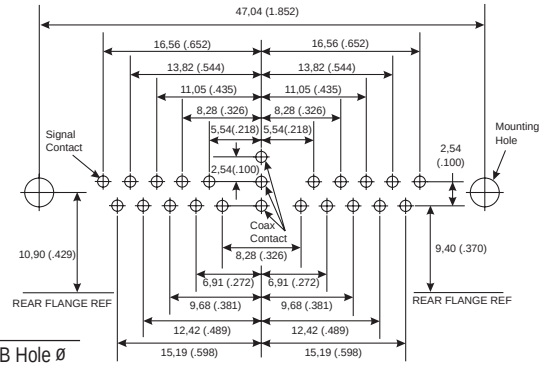

Shell Size	B
Contact Arrangement	21W1
No. of Size 20 Cavities	20 #20
No. of Size 8 Cavities	1 #8

Signal Contact ø	Recommended PCB Hole ø
0,60 (.024)	1,00 (.039)

Mounting Type	Recommended PCB Hole ø
Without Boardlock	3,05 (.120)
With Boardlock	3,10 (.122)

Size 8 Contact Type	Recommended PCB Hole ø
Coaxial (C or X)	1,14 (.045)

ITT

Dimensions shown in mm
Specifications and dimensions subject to change
www.ittcannon.com

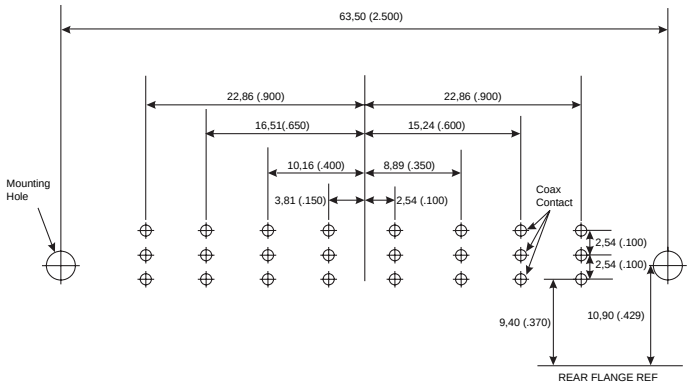

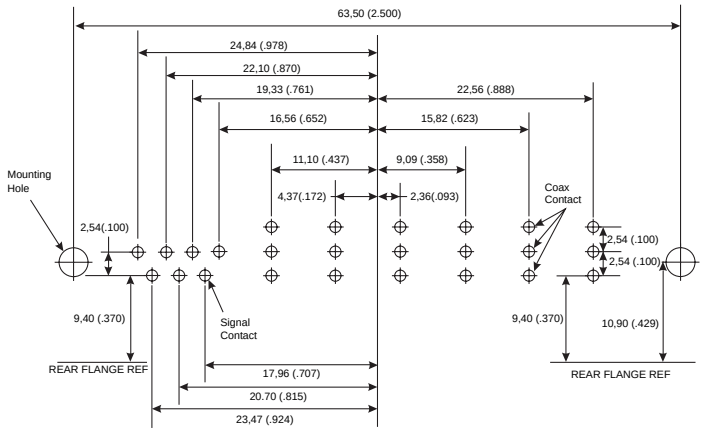

Shell Size	C	C
Contact Arrangement	8W8	13W6
No. of Size 20 Cavities	0 #20	7 #20
No. of Size 8 Cavities	8 #8	6 #8

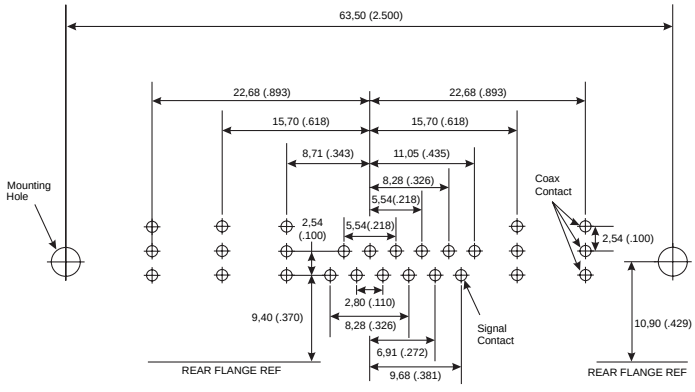

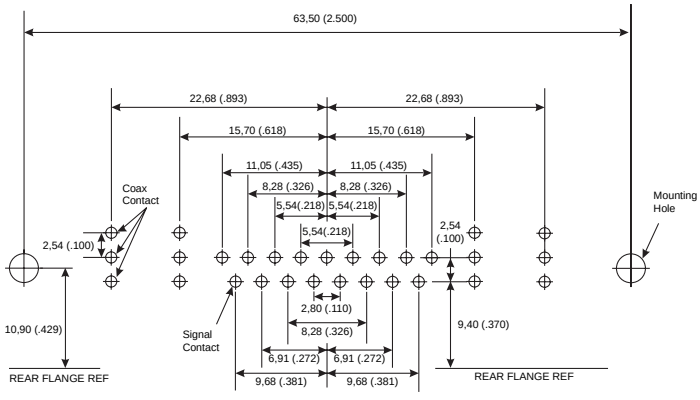

Shell Size	C	C
Contact Arrangement	17W5	21WA4
No. of Size 20 Cavities	12 #20	17 #20
No. of Size 8 Cavities	5 #8	4 #8

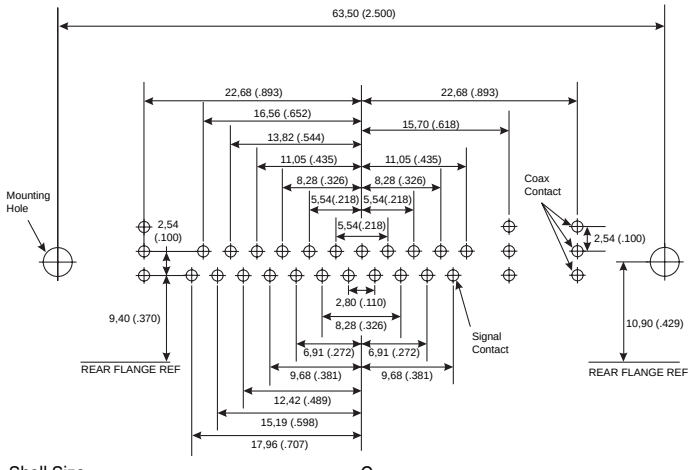

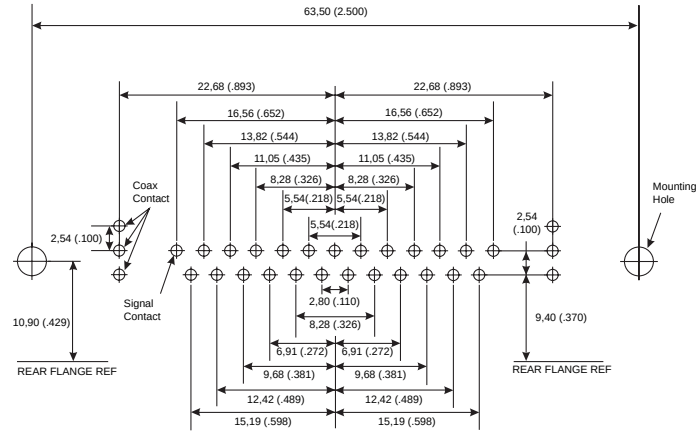

Shell Size	C	C
Contact Arrangement	25W3	27W2
No. of Size 20 Cavities	22 #20	25 #20
No. of Size 8 Cavities	3 #8	2 #8

Signal Contact ø	Recommended PCB Hole ø
0,60 (.024)	1,00 (.039)

Mounting Type	Recommended PCB Hole ø
Without Boardlock	3,05 (.120)
With Boardlock	3,10 (.122)

Size 8 Contact Type	Recommended PCB Hole ø
Coaxial (C or X)	1,14 (.045)

Dimensions shown in mm

Specifications and dimensions subject to change

www.ittcannon.com

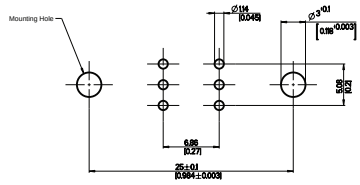

Shell Size	E
Contact Arrangement	2W2/2WK2
No. of Size 20 Cavities	0 #20
No. of Size 8 Cavities	2 #8

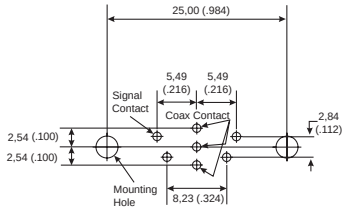

Shell Size	E
Contact Arrangement	5W1
No. of Size 20 Cavities	4 #20
No. of Size 8 Cavities	1 #8

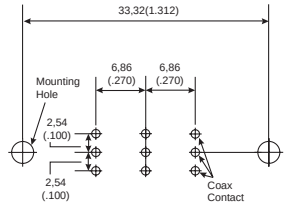

Shell Size	A
Contact Arrangement	3W3/3WK3
No. of Size 20 Cavities	0 #20
No. of Size 8 Cavities	3 #8

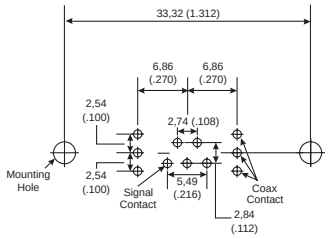

Shell Size	A
Contact Arrangement	7W2
No. of Size 20 Cavities	5 #20
No. of Size 8 Cavities	2 #8

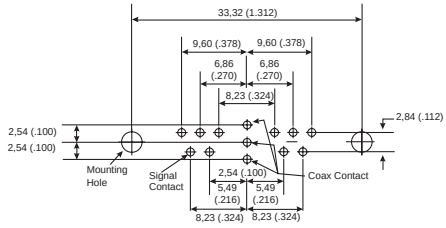

Shell Size	A
Contact Arrangement	11W1
No. of Size 20 Cavities	10 #20
No. of Size 8 Cavities	1 #8

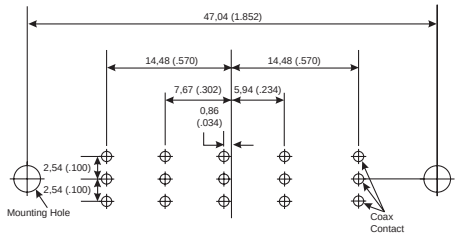

Shell Size	B
Contact Arrangement	5W5
No. of Size 20 Cavities	0 #20
No. of Size 8 Cavities	5 #8

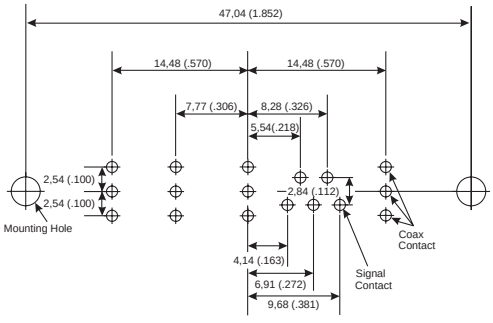

Shell Size	B
Contact Arrangement	9W4
No. of Size 20 Cavities	5 #20
No. of Size 8 Cavities	4 #8

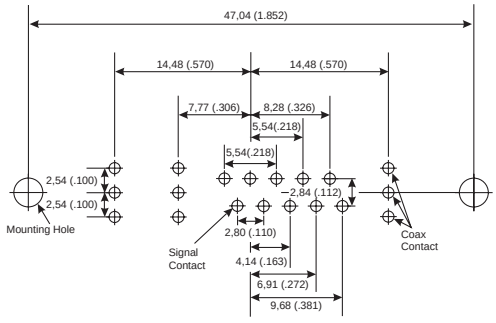

Shell Size	B
Contact Arrangement	13W3
No. of Size 20 Cavities	10 #20
No. of Size 8 Cavities	3 #8

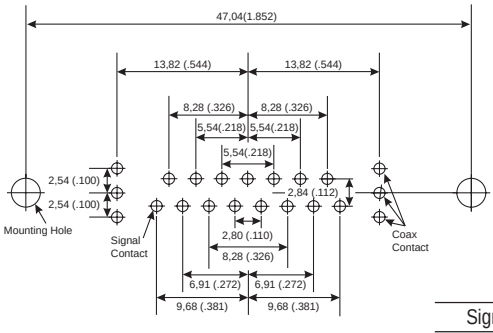

Shell Size	B
Contact Arrangement	17W2
No. of Size 20 Cavities	15 #20
No. of Size 8 Cavities	2 #8

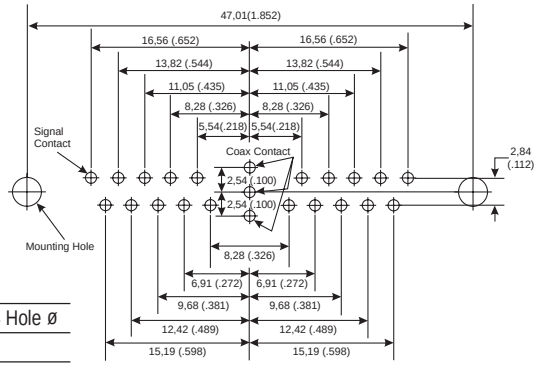

Shell Size	B
Contact Arrangement	21W1
No. of Size 20 Cavities	20 #20
No. of Size 8 Cavities	1 #8

Signal Contact ø	Recommended PCB Hole ø
0,60 (.024)	1,00 (.039)
0,76 (.030)	1,14 (.045)

Mounting Type	Recommended PCB Hole ø
Without Boardlock	3,05 (.120)
With Boardlock	3,10 (.122)

Size 8 Contact Type	Recommended PCB Hole ø
Coaxial (C or X)	1,14 (.045)

ITT

Dimensions shown in mm
Specifications and dimensions subject to change

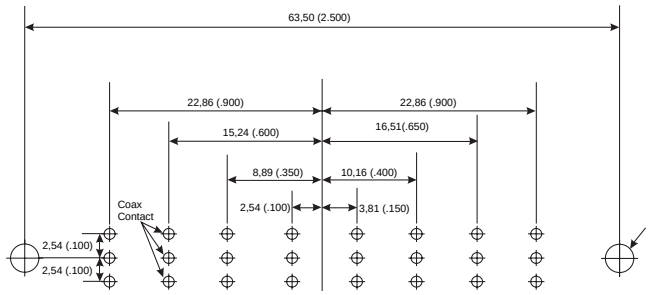

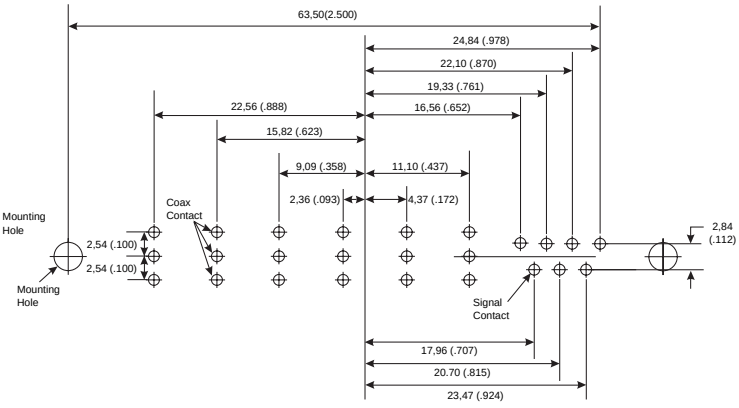

Shell Size	C	C
Contact Arrangement	8W8	13W6
No. of Size 20 Cavities	0 #20	7 #20
No. of Size 8 Cavities	8 #8	6 #8

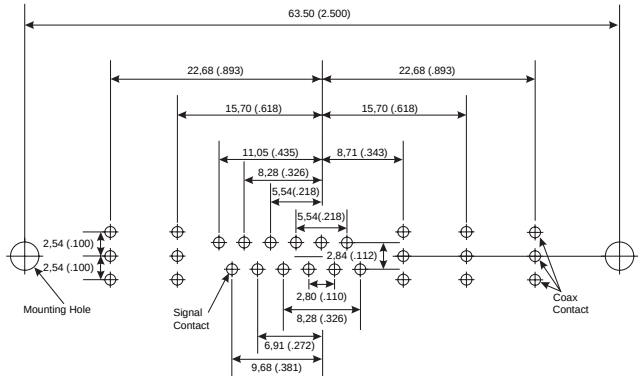

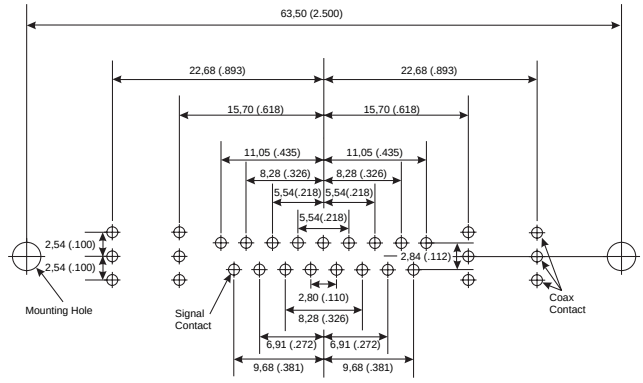

Shell Size	C	C
Contact Arrangement	17W5	21WA4
No. of Size 20 Cavities	12 #20	17 #20
No. of Size 8 Cavities	5 #8	4 #8

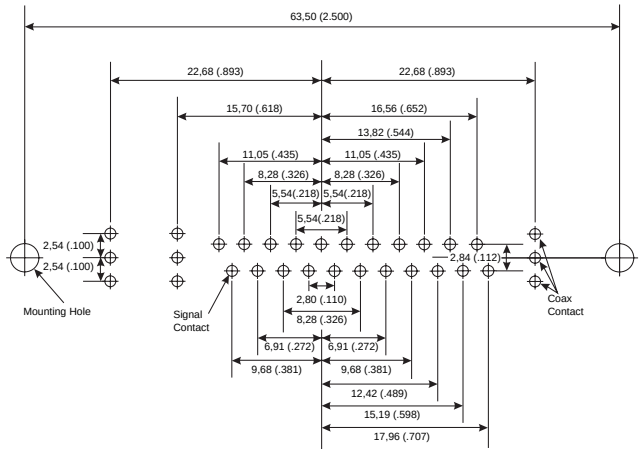

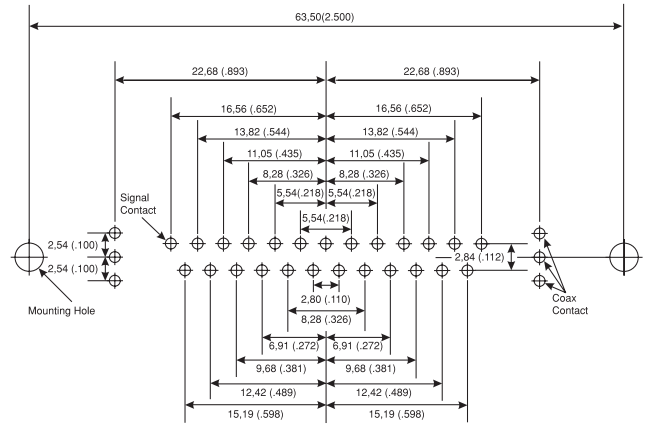

Shell Size	C	C
Contact Arrangement	25W3	27W2
No. of Size 20 Cavities	22 #20	25 #20
No. of Size 8 Cavities	3 #8	2 #8

Signal Contact ø	Recommended PCB Hole ø
0,60 (.024)	1,00 (.039)
0,76 (.030)	1,14 (.045)

Mounting Type	Recommended PCB Hole ø
Without Boardlock	3,05 (.120)
With Boardlock	3,10 (.122)

Size 8 Contact Type	Recommended PCB Hole ø
Coaxial (C or X)	1,14 (.045)

Dimensions shown in mm
Specifications and dimensions subject to change

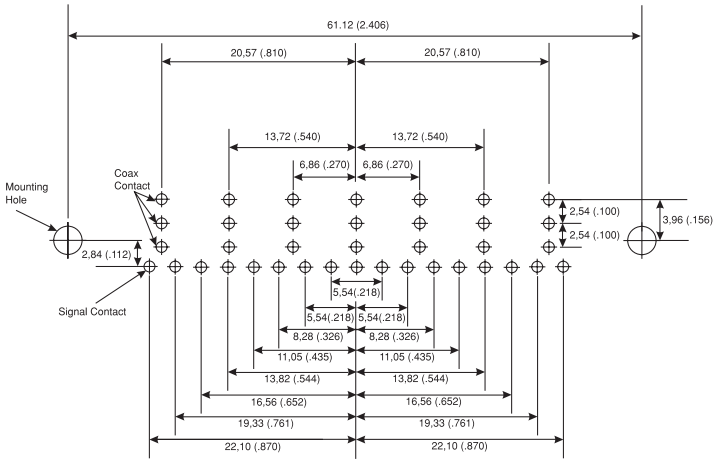

Shell Size	D
Contact Arrangement	24W7
No. of Size 20 Cavities	17 #20
No. of Size 8 Cavities	7 #8

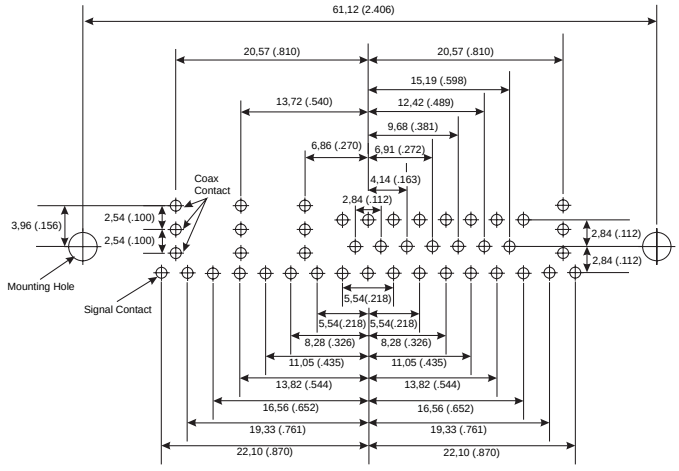

Shell Size	D
Contact Arrangement	36W4
No. of Size 20 Cavities	32 #20
No. of Size 8 Cavities	4 #8

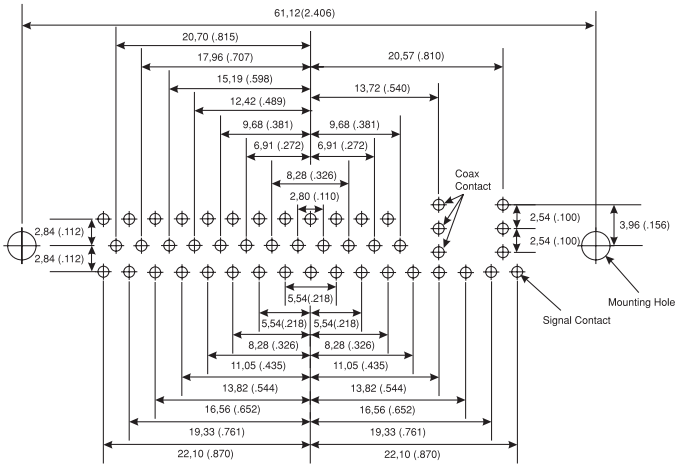

Shell Size	D
Contact Arrangement	43W2
No. of Size 20 Cavities	41 #20
No. of Size 8 Cavities	2 #8

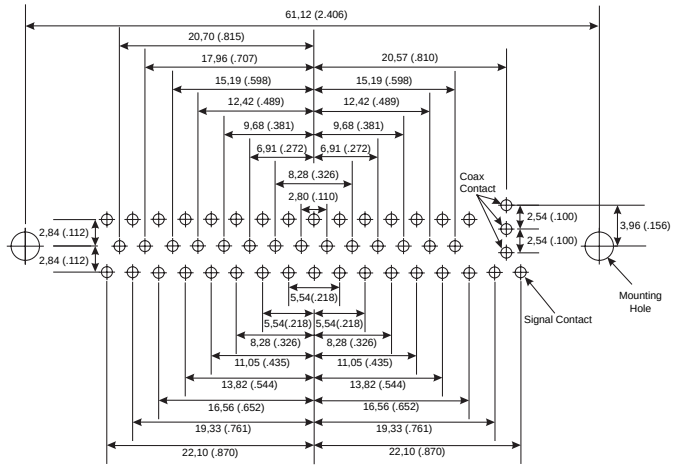

Shell Size	D
Contact Arrangement	47W1
No. of Size 20 Cavities	46 #20
No. of Size 8 Cavities	1 #8

Signal Contact ø	Recommended PCB Hole ø
0,60 (.024)	1,00 (.039)
0,76 (.030)	1,14 (.045)

Mounting Type	Recommended PCB Hole ø
Without Boardlock	3,05 (.120)
With Boardlock	3,10 (.122)

Size 8 Contact Type	Recommended PCB Hole ø
Coaxial (C or X)	1,14 (.045)

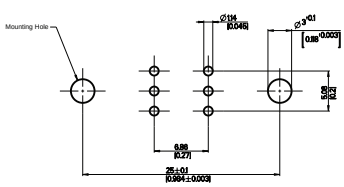

Shell Size	E
Contact Arrangement	2W2/2WK2
No. of Size 20 Cavities	0 #20
No. of Size 8 Cavities	2 #8

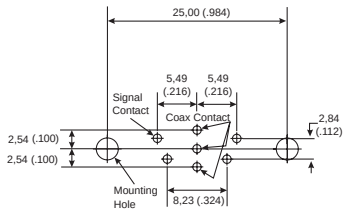

Shell Size	E
Contact Arrangement	5W1
No. of Size 20 Cavities	4 #20
No. of Size 8 Cavities	1 #8

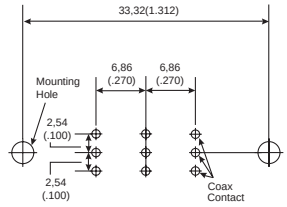

Shell Size	A
Contact Arrangement	3W3/3WK3
No. of Size 20 Cavities	0 #20
No. of Size 8 Cavities	3 #8

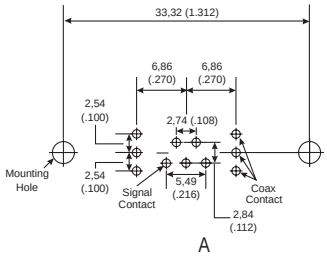

Shell Size	A
Contact Arrangement	7W2
No. of Size 20 Cavities	5 #20
No. of Size 8 Cavities	2 #8

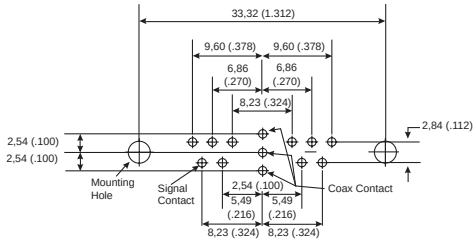

Shell Size	A
Contact Arrangement	11W1
No. of Size 20 Cavities	10 #20
No. of Size 8 Cavities	1 #8

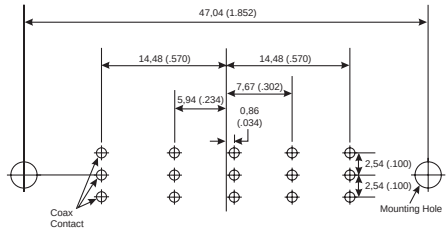

Shell Size	B
Contact Arrangement	5W5
No. of Size 20 Cavities	0 #20
No. of Size 8 Cavities	5 #8

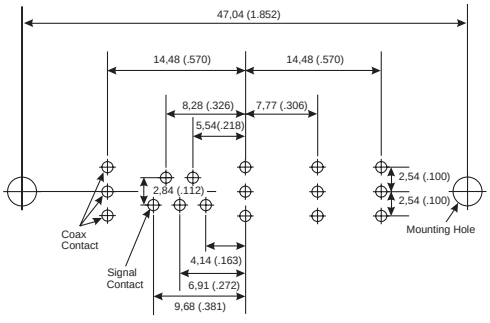

Shell Size	B
Contact Arrangement	9W4
No. of Size 20 Cavities	5 #20
No. of Size 8 Cavities	4 #8

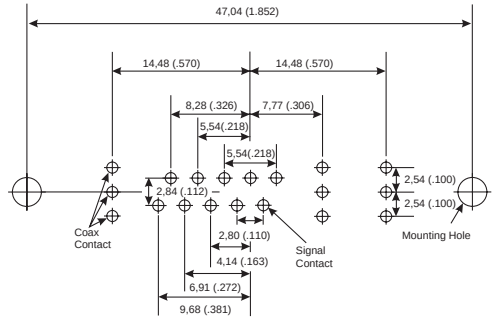

Shell Size	B
Contact Arrangement	13W3
No. of Size 20 Cavities	10 #20
No. of Size 8 Cavities	3 #8

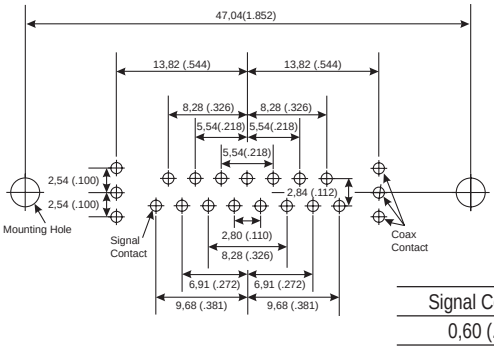

Shell Size	B
Contact Arrangement	17W2
No. of Size 20 Cavities	15 #20
No. of Size 8 Cavities	2 #8

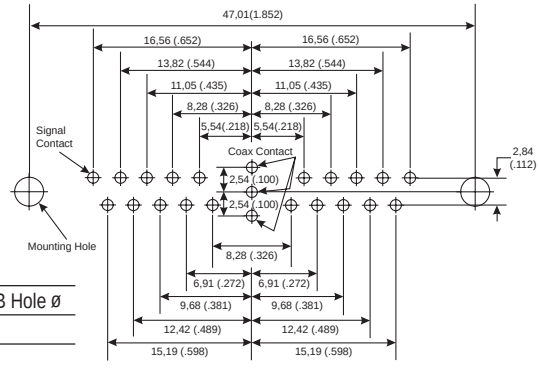

Shell Size	B
Contact Arrangement	21W1
No. of Size 20 Cavities	20 #20
No. of Size 8 Cavities	1 #8

Signal Contact ø	Recommended PCB Hole ø
0,60 (.024)	1,00 (.039)
0,76 (.030)	1,14 (.045)

Mounting Type	Recommended PCB Hole ø
Without Boardlock	3,05 (.120)
With Boardlock	3,10 (.122)

Size 8 Contact Type	Recommended PCB Hole ø
Coaxial (C or X)	1,14 (.045)

Dimensions shown in mm
Specifications and dimensions subject to change

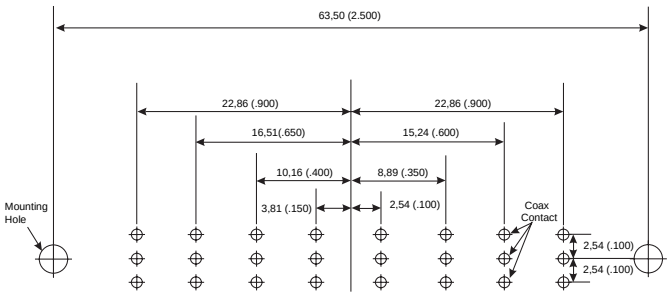

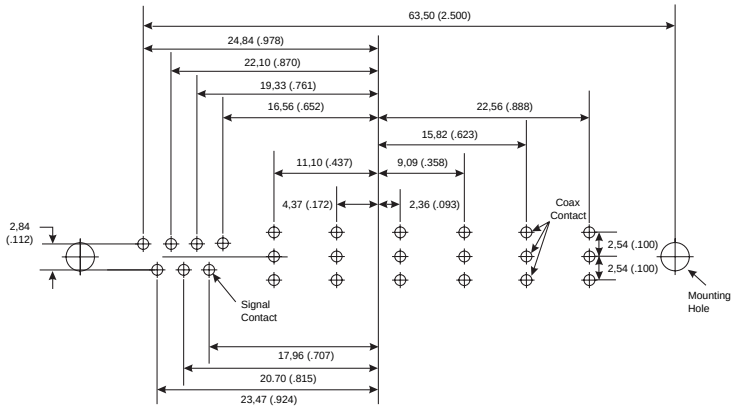

Shell Size	C	C
Contact Arrangement	8W8	13W6
No. of Size 20 Cavities	0 #20	7 #20
No. of Size 8 Cavities	8 #8	6 #8

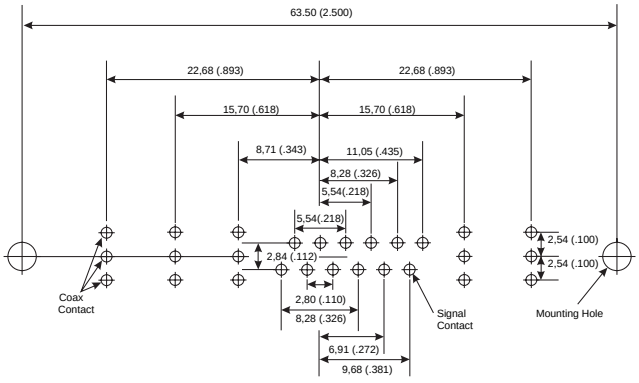

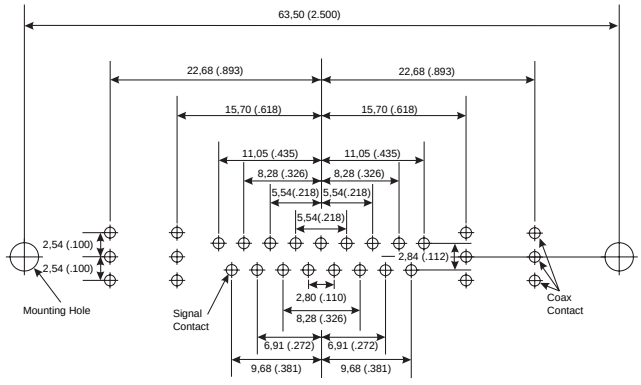

Shell Size	C	C
Contact Arrangement	17W5	21WA4
No. of Size 20 Cavities	12 #20	17 #20
No. of Size 8 Cavities	5 #8	4 #8

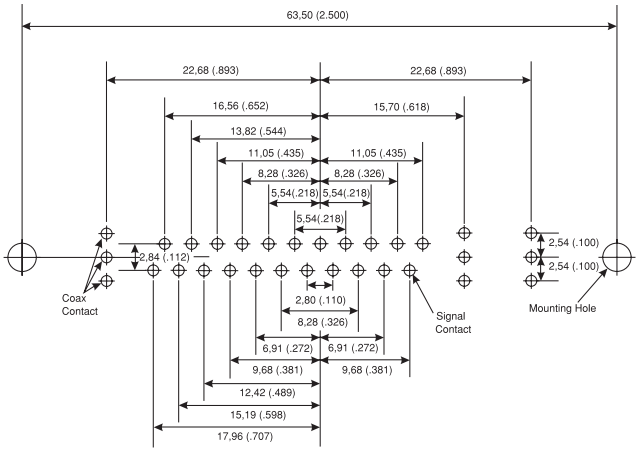

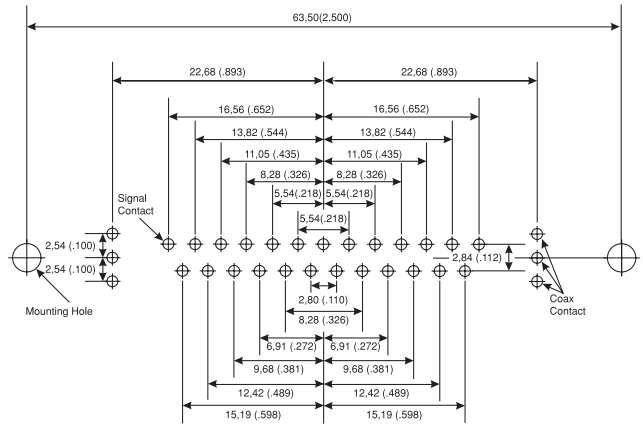

Shell Size	C	C
Contact Arrangement	25W3	27W2
No. of Size 20 Cavities	22 #20	25 #20
No. of Size 8 Cavities	3 #8	2 #8

Signal Contact ø	Recommended PCB Hole ø
0,60 (.024)	1,00 (.039)
0,76 (.030)	1,14 (.045)

Mounting Type	Recommended PCB Hole ø
Without Boardlock	3,05 (.120)
With Boardlock	3,10 (.122)

Size 8 Contact Type	Recommended PCB Hole ø

ITT

Dimensions shown in mm
Specifications and dimensions subject to change

www.ittcannon.com

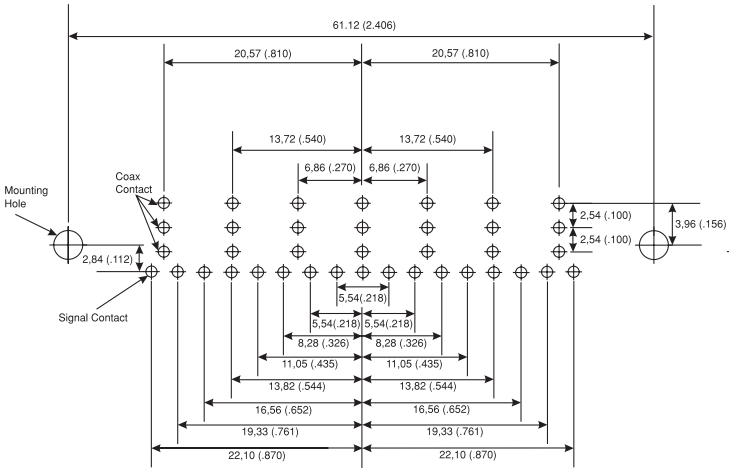

Shell Size	D
Contact Arrangement	24W7
No. of Size 20 Cavities	17 #20
No. of Size 8 Cavities	7 #8

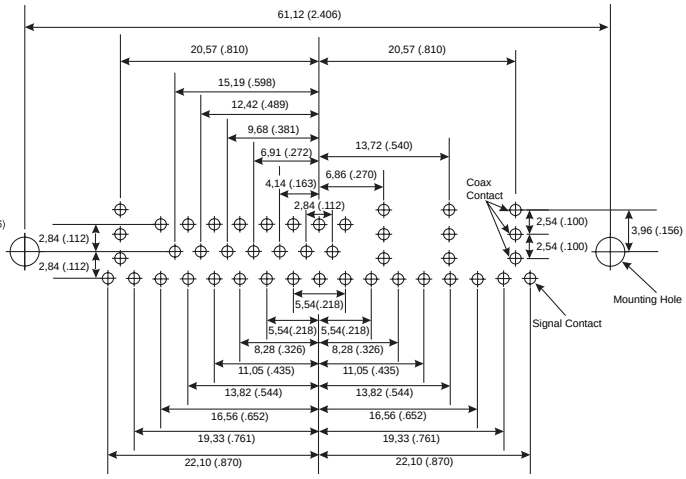

D
36W4
32 #20
4 #8

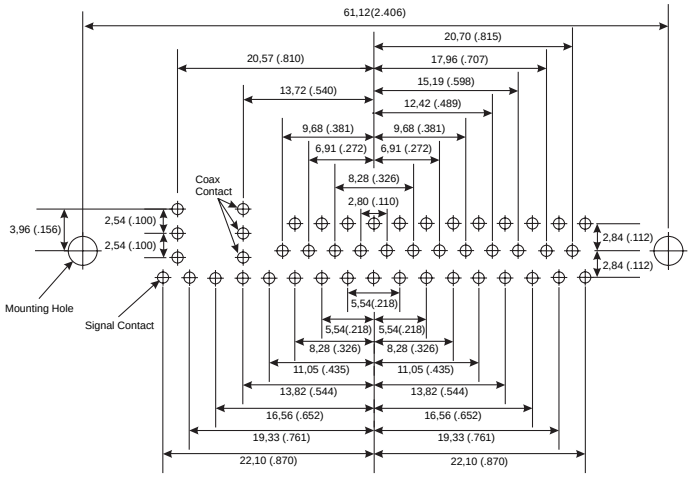

Shell Size	D
Contact Arrangement	43W2
No. of Size 20 Cavities	41 #20
No. of Size 8 Cavities	2 #8

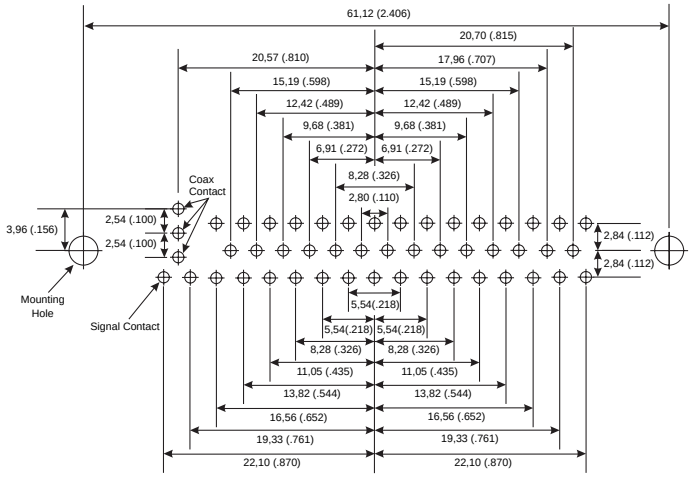

D
47W1
46 #20
1 #8

Signal Contact ø	Recommended PCB Hole ø
0,60 (.024)	1,00 (.039)
0,76 (.030)	1,14 (.045)

Mounting Type	Recommended PCB Hole ø
Without Boardlock	3,05 (.120)
With Boardlock	3,10 (.122)

Size 8 Contact Type	Recommended PCB Hole ø
Coaxial (C or X)	1,14 (.045)

Dimensions shown in mm
Specifications and dimensions subject to change

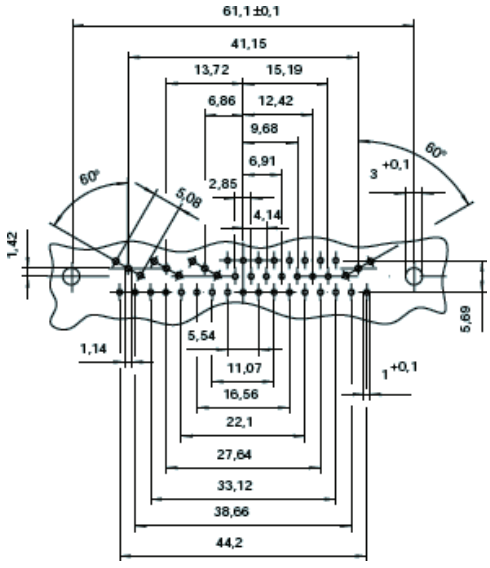

Shell Size	D
Contact Arrangement	36C4/36X4
No. of Size 20 Cavities	32#20
No. of Size 8 Cavities	4#8

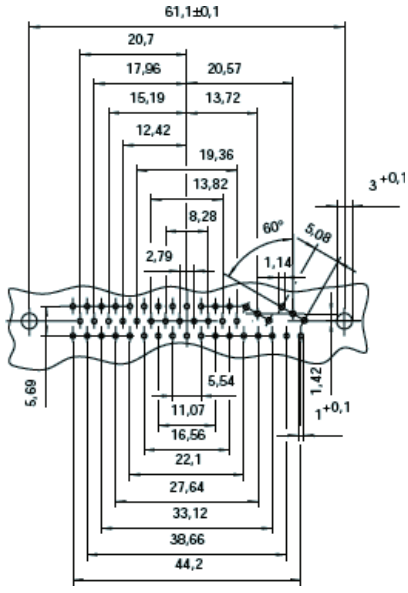

	D
	43C2/43X2
	41#20
	2#8

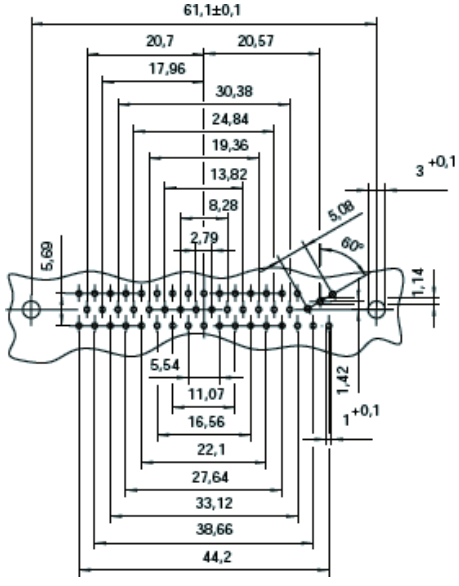

Shell Size	D
Contact Arrangement	47C1/47X1
No. of Size 20 Cavities	46#20
No. of Size 8 Cavities	1#8

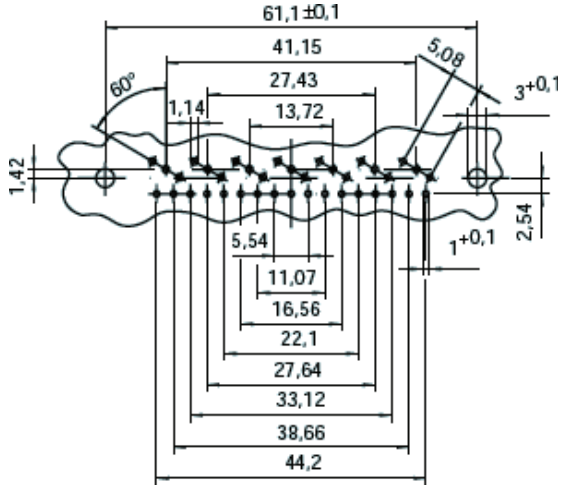

	D
	24C7/24X7
	17#20
	7#8

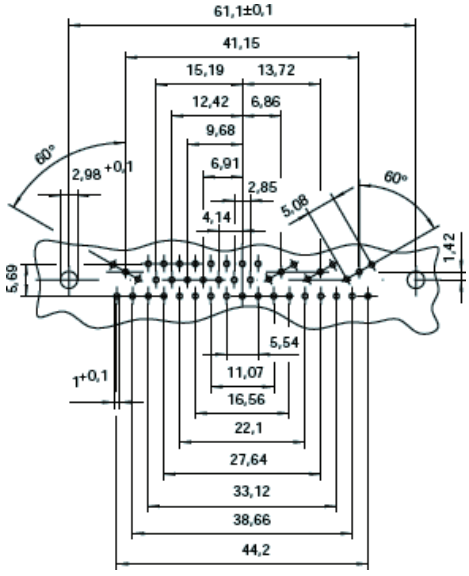

Shell Size	D
Contact Arrangement	36C4/36X4
No. of Size 20 Cavities	32#20
No. of Size 8 Cavities	4#8

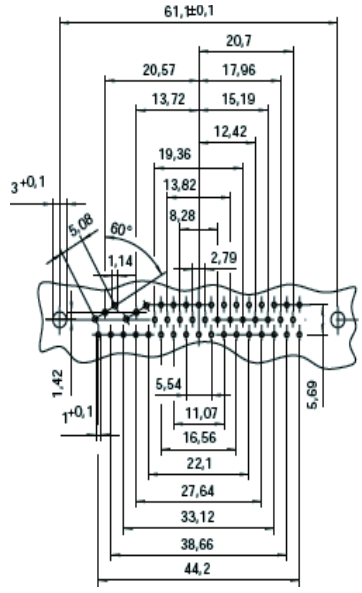

Shell Size	D
Contact Arrangement	43C2/43X2
No. of Size 20 Cavities	41#20
No. of Size 8 Cavities	2#8

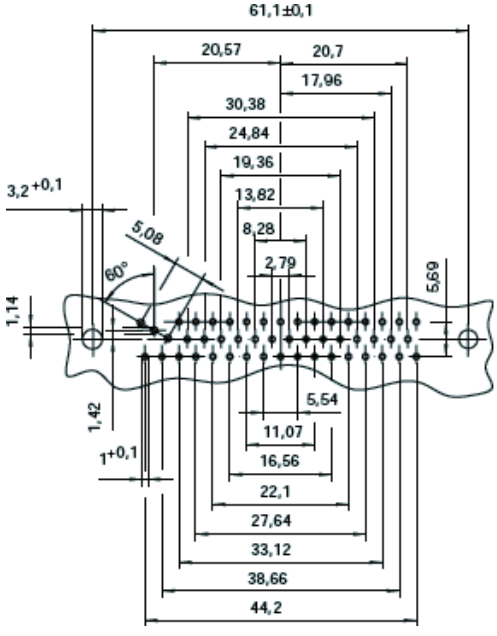

Shell Size	C
Contact Arrangement	47C1/47X1
No. of Size 20 Cavities	46#20
No. of Size 8 Cavities	1#8

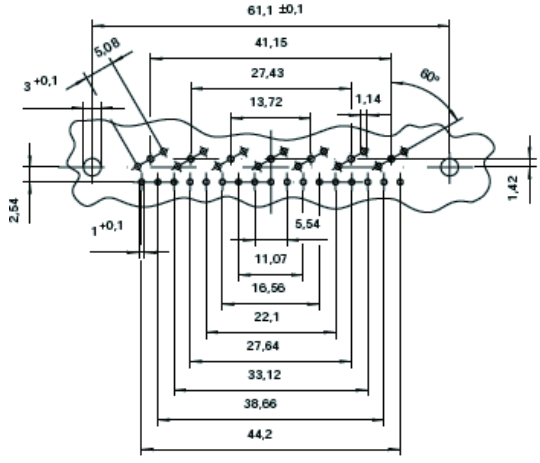

Shell Size	D
Contact Arrangement	24C7/24X7
No. of Size 20 Cavities	17#20
No. of Size 8 Cavities	7#8

Dimensions shown in mm
Specifications and dimensions subject to change

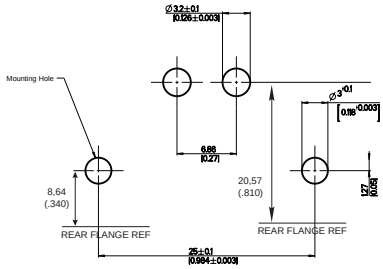

Shell Size	E
Contact Arrangement	2W2/2WK2
No. of Size 20 Cavities	0 #20
No. of Size 8 Cavities	2 #8

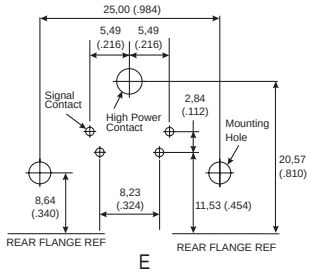

Shell Size	E
Contact Arrangement	5W1
No. of Size 20 Cavities	4 #20
No. of Size 8 Cavities	1 #8

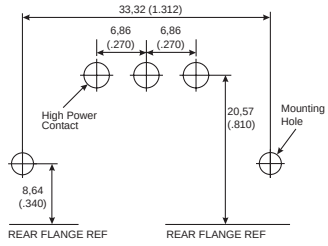

Shell Size	A
Contact Arrangement	3W3/3WK3
No. of Size 20 Cavities	0 #20
No. of Size 8 Cavities	3 #8

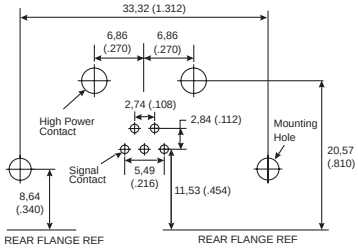

Shell Size	A
Contact Arrangement	7W2
No. of Size 20 Cavities	5 #20
No. of Size 8 Cavities	2 #8

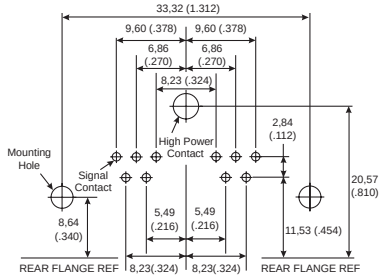

Shell Size	A
Contact Arrangement	11W1
No. of Size 20 Cavities	10 #20
No. of Size 8 Cavities	1 #8

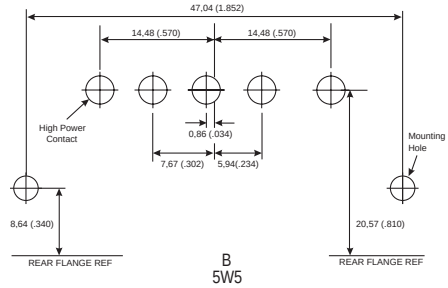

Shell Size	B
Contact Arrangement	5W5
No. of Size 20 Cavities	0 #20
No. of Size 8 Cavities	5 #8

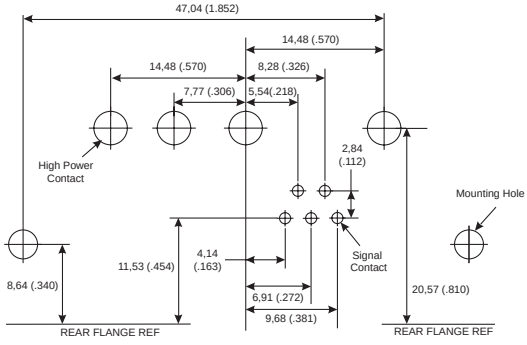

Shell Size	B
Contact Arrangement	9W4
No. of Size 20 Cavities	5 #20
No. of Size 8 Cavities	4 #8

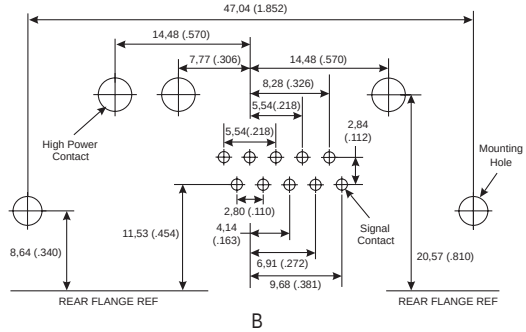

Shell Size	B
Contact Arrangement	13W3
No. of Size 20 Cavities	10 #20
No. of Size 8 Cavities	3 #8

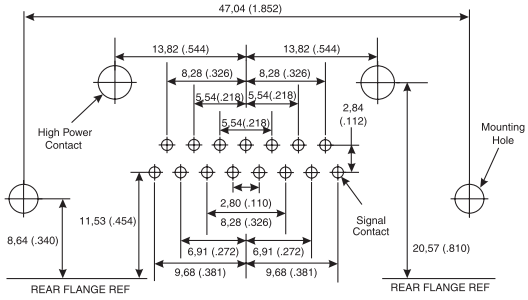

Shell Size	B
Contact Arrangement	17W2
No. of Size 20 Cavities	15 #20
No. of Size 8 Cavities	2 #8

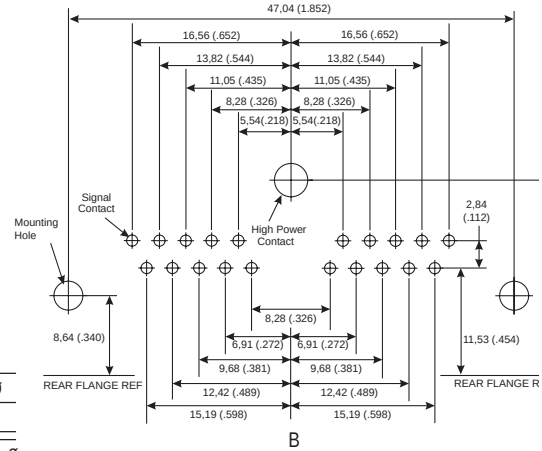

Shell Size	B
Contact Arrangement	21W1
No. of Size 20 Cavities	20 #20
No. of Size 8 Cavities	1 #8

Signal Contact ø	Recommended PCB Hole ø
0,76 (.030)	1,14 (.045)

Mounting Type	Recommended PCB Hole ø
Without Boardlock	3,05 (.120)
With Boardlock	3,10 (.122)

Size 8 Contact Type	Recommended PCB Hole ø
High Power (H)	3,56 (.140)

ITT

Dimensions shown in mm

Specifications and dimensions subject to change

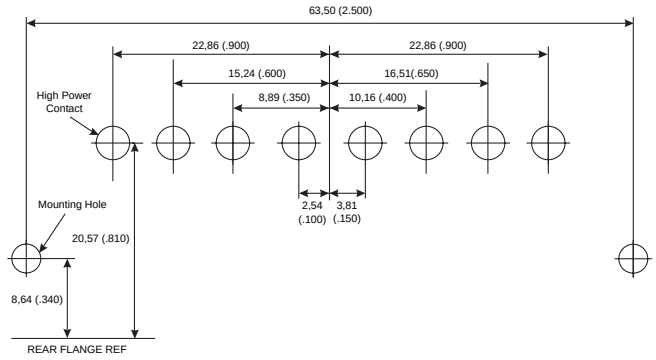

Shell Size	C
Contact Arrangement	8W8
No. of Size 20 Cavities	0 #20
No. of Size 8 Cavities	8 #8

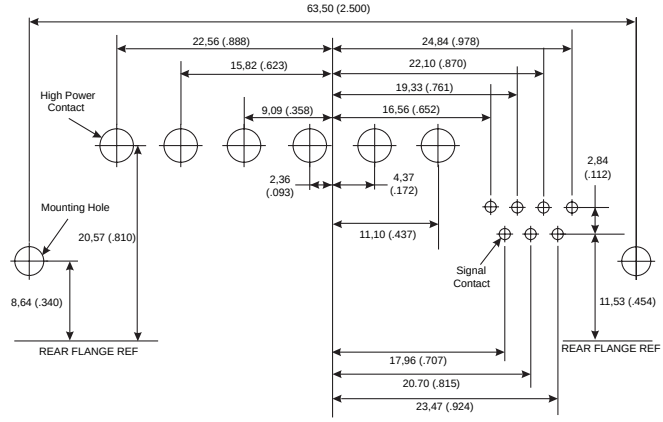

C
13W6
7 #20
6 #8

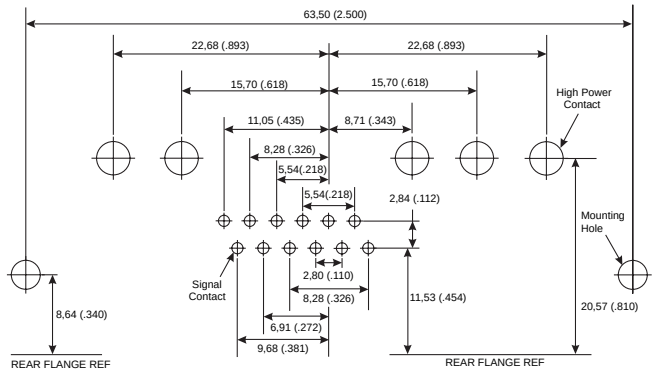

Shell Size	C
Contact Arrangement	17W5
No. of Size 20 Cavities	12 #20
No. of Size 8 Cavities	5 #8

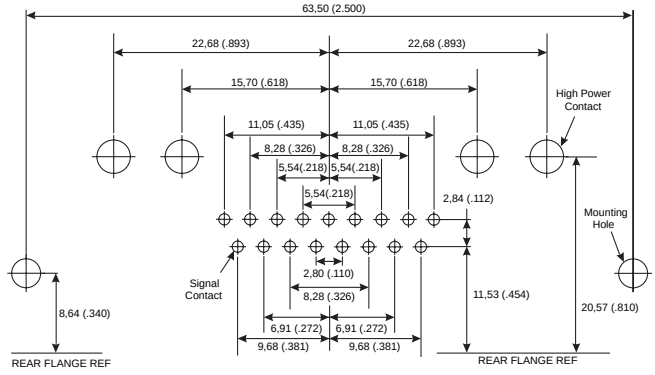

C
21WA4
17 #20
4 #8

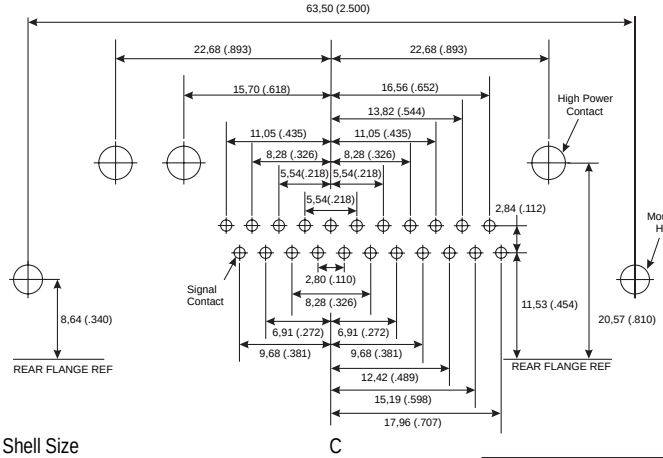

Shell Size	C
Contact Arrangement	25W3
No. of Size 20 Cavities	22 #20
No. of Size 8 Cavities	3 #8

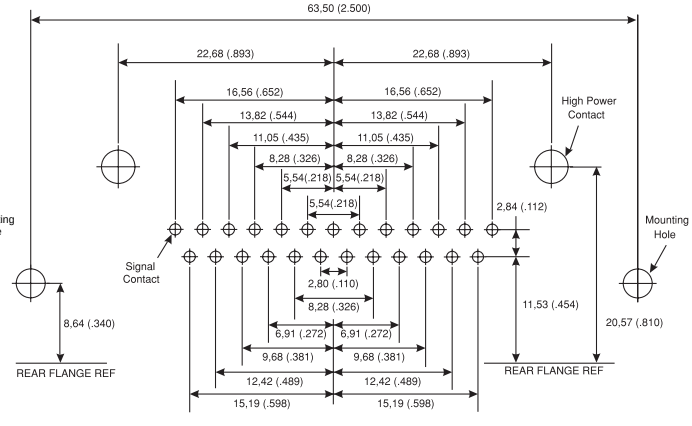

C
27W2
25 #20
2 #8

Signal Contact ø	Recommended PCB Hole ø
0,76 (.030)	1,14 (.045)

Mounting Type	Recommended PCB Hole ø
Without Boardlock	3,05 (.120)
With Boardlock	3,10 (.122)

Size 8 Contact Type	Recommended PCB Hole ø
High Power (H)	3,56 (.140)

Dimensions shown in mm

Specifications and dimensions subject to change

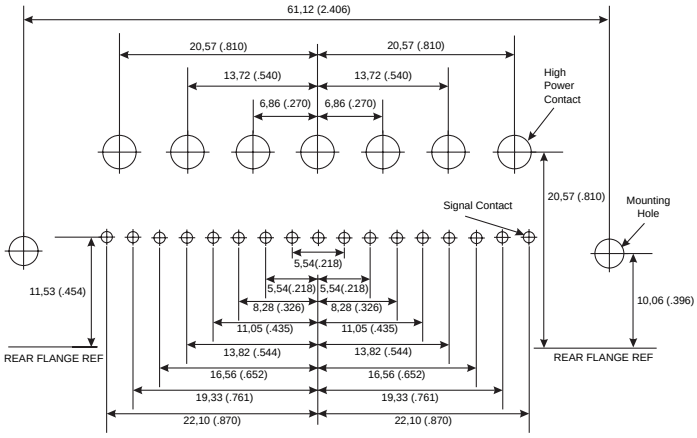

Shell Size	D
Contact Arrangement	24W7
No. of Size 20 Cavities	17 #20
No. of Size 8 Cavities	7 #8

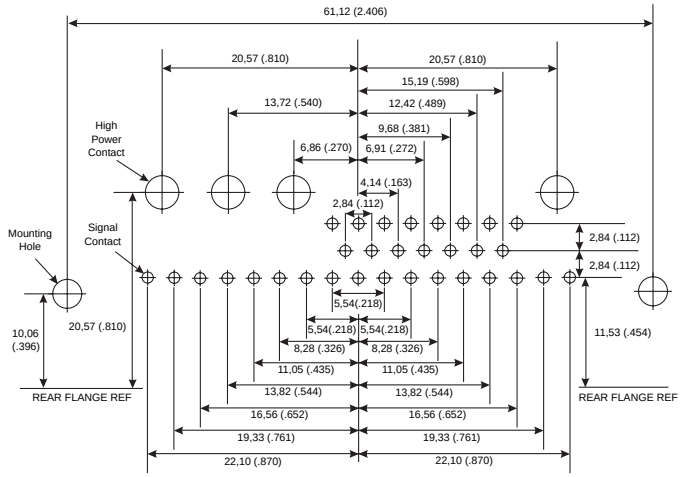

Shell Size	D
Contact Arrangement	36W4
No. of Size 20 Cavities	32 #20
No. of Size 8 Cavities	4 #8

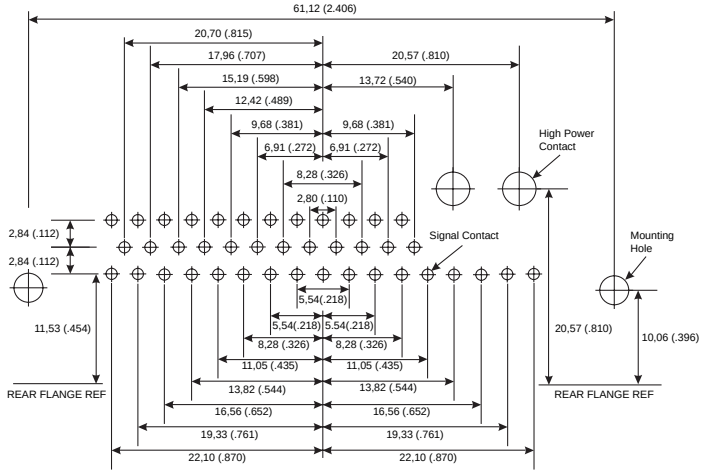

Shell Size	D
Contact Arrangement	43W2
No. of Size 20 Cavities	41 #20
No. of Size 8 Cavities	2 #8

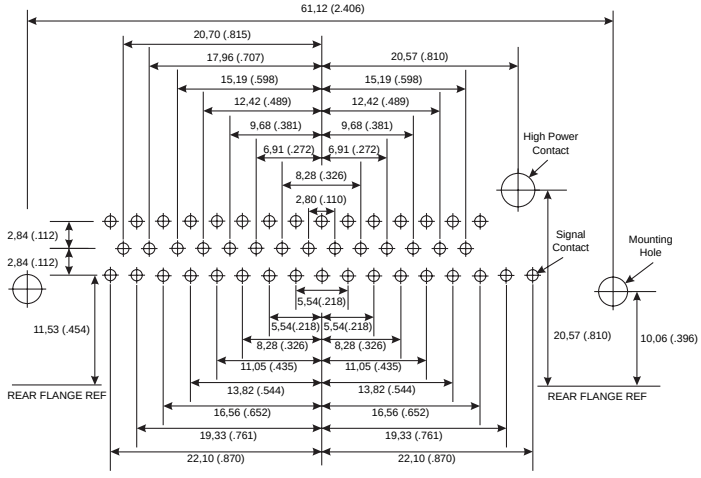

Shell Size	D
Contact Arrangement	47W1
No. of Size 20 Cavities	46 #20
No. of Size 8 Cavities	1 #8

Signal Contact ø	Recommended PCB Hole ø
0,76 (.030)	1,14 (.045)

Mounting Type	Recommended PCB Hole ø
Without Boardlock	3,05 (.120)
With Boardlock	3,10 (.122)

Size 8 Contact Type	Recommended PCB Hole ø
High Power (H)	3,56 (.140)

ITT

Dimensions shown in mm
Specifications and dimensions subject to change
www.ittcannon.com

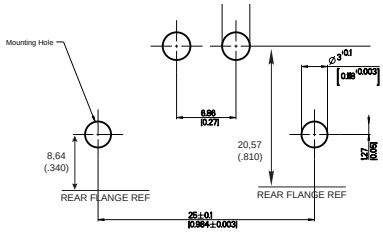

Shell Size	E
Contact Arrangement	2W2/2WK2
No. of Size 20 Cavities	0 #20
No. of Size 8 Cavities	2 #8

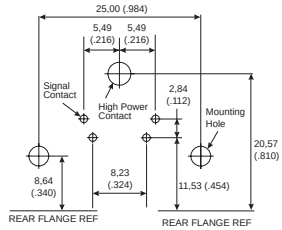

Shell Size	E
Contact Arrangement	5W1
No. of Size 20 Cavities	4 #20
No. of Size 8 Cavities	1 #8

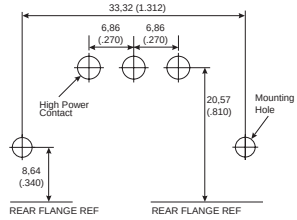

Shell Size	A
Contact Arrangement	3W3/3WK3
No. of Size 20 Cavities	0 #20
No. of Size 8 Cavities	3 #8

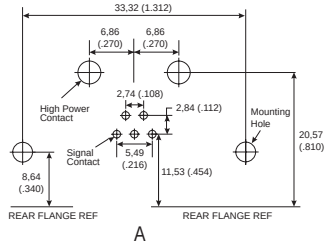

Shell Size	A
Contact Arrangement	7W2
No. of Size 20 Cavities	5 #20
No. of Size 8 Cavities	2 #8

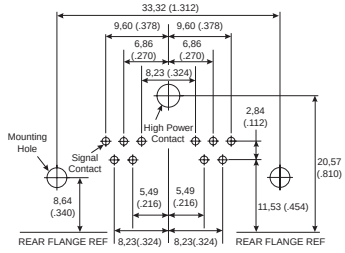

Shell Size	A
Contact Arrangement	11W1
No. of Size 20 Cavities	10 #20
No. of Size 8 Cavities	1 #8

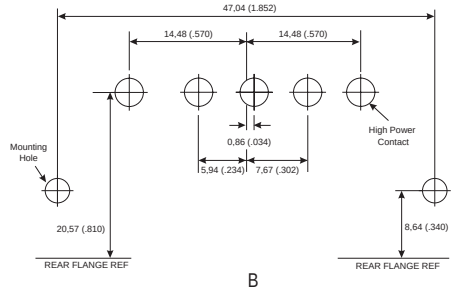

Shell Size	B
Contact Arrangement	5W5
No. of Size 20 Cavities	0 #20
No. of Size 8 Cavities	5 #8

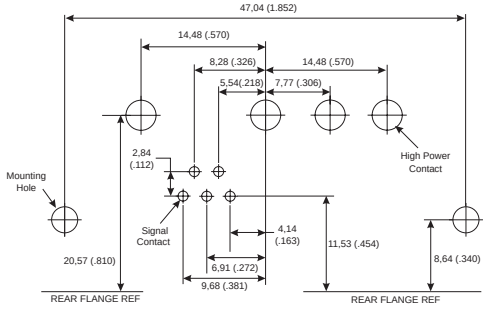

Shell Size	B
Contact Arrangement	9W4
No. of Size 20 Cavities	5 #20
No. of Size 8 Cavities	4 #8

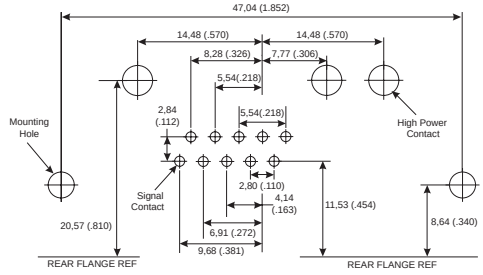

Shell Size	B
Contact Arrangement	13W3
No. of Size 20 Cavities	10 #20
No. of Size 8 Cavities	3 #8

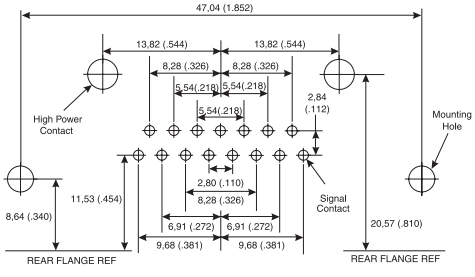

Shell Size	B
Contact Arrangement	17W2
No. of Size 20 Cavities	15 #20
No. of Size 8 Cavities	2 #8

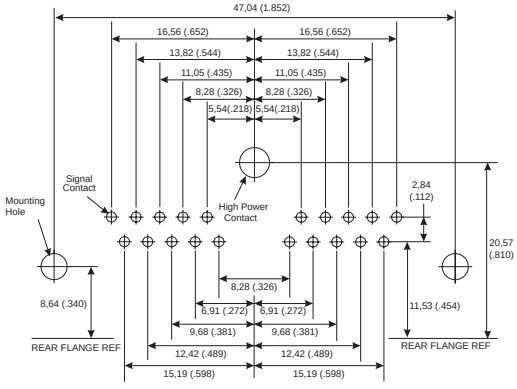

Shell Size	B
Contact Arrangement	21W1
No. of Size 20 Cavities	20 #20
No. of Size 8 Cavities	1 #8

Signal Contact ø	Recommended PCB Hole ø
0,76 (.030)	1,14 (.045)

Mounting Type	Recommended PCB Hole ø
Without Boardlock	3,05 (.120)
With Boardlock	3,10 (.122)

Size 8 Contact Type	Recommended PCB Hole ø
High Power (H)	3,56 (.140)

Dimensions shown in mm
Specifications and dimensions subject to change

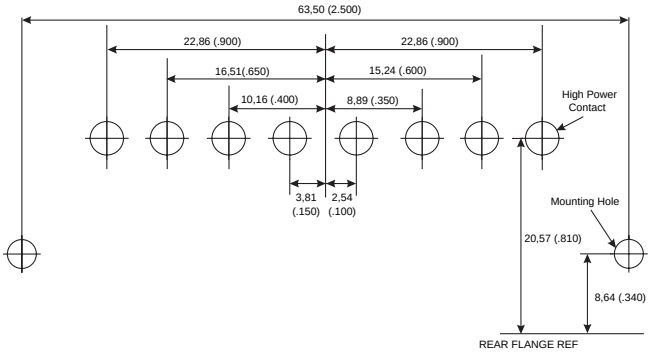

Shell Size	C
Contact Arrangement	8W8
No. of Size 20 Cavities	0 #20
No. of Size 8 Cavities	8 #8

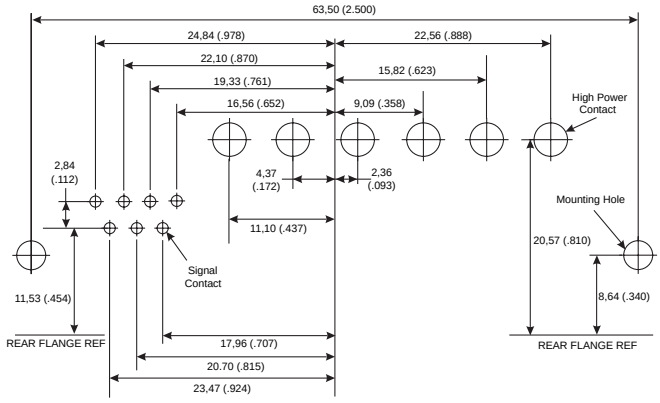

Shell Size	C
Contact Arrangement	13W6
No. of Size 20 Cavities	7 #20
No. of Size 8 Cavities	6 #8

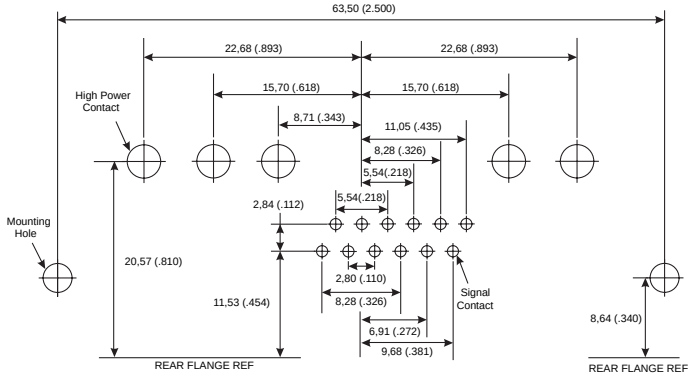

Shell Size	C
Contact Arrangement	17W5
No. of Size 20 Cavities	12 #20
No. of Size 8 Cavities	5 #8

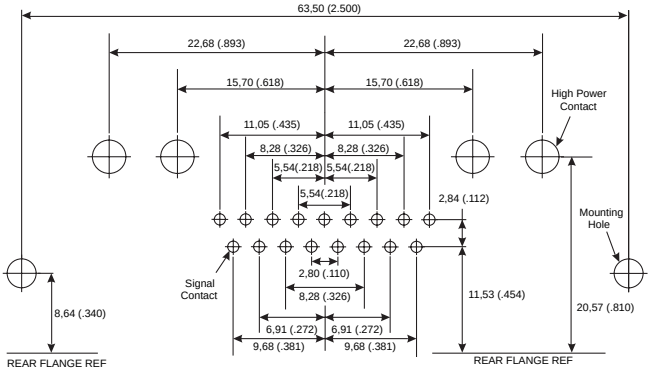

Shell Size	C
Contact Arrangement	21WA4
No. of Size 20 Cavities	17 #20
No. of Size 8 Cavities	4 #8

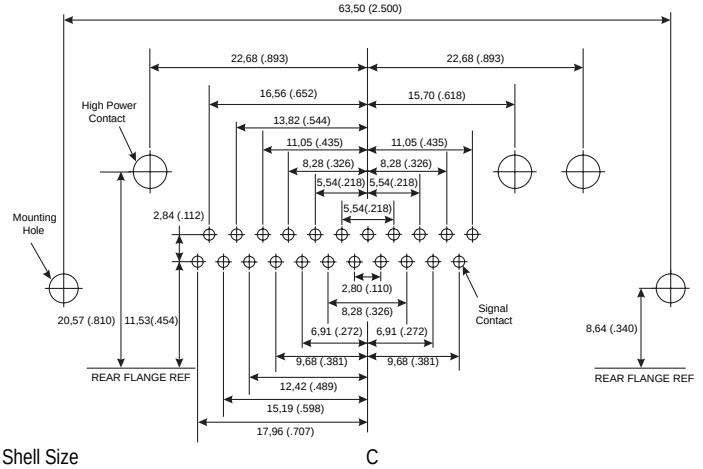

Shell Size	C
Contact Arrangement	25W3
No. of Size 20 Cavities	22 #20
No. of Size 8 Cavities	3 #8

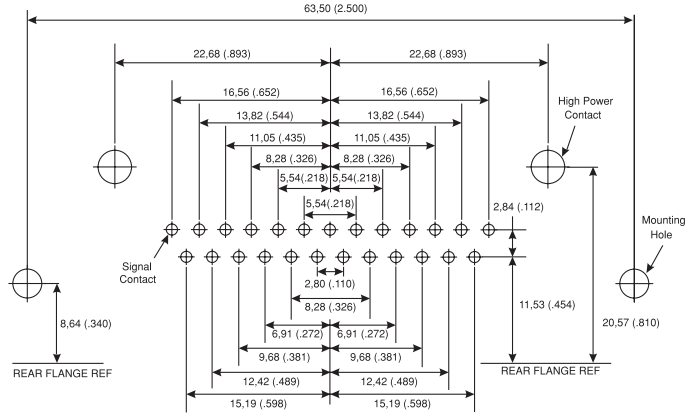

Shell Size	C
Contact Arrangement	27W2
No. of Size 20 Cavities	25 #20
No. of Size 8 Cavities	2 #8

Signal Contact ø	Recommended PCB Hole ø
0,76 (.030)	1,14 (.045)

Mounting Type	Recommended PCB Hole ø
Without Boardlock	3,05 (.120)
With Boardlock	3,10 (.122)

Size 8 Contact Type	Recommended PCB Hole ø
High Power (H)	3,56 (.140)

ITT

Dimensions shown in mm

Specifications and dimensions subject to change

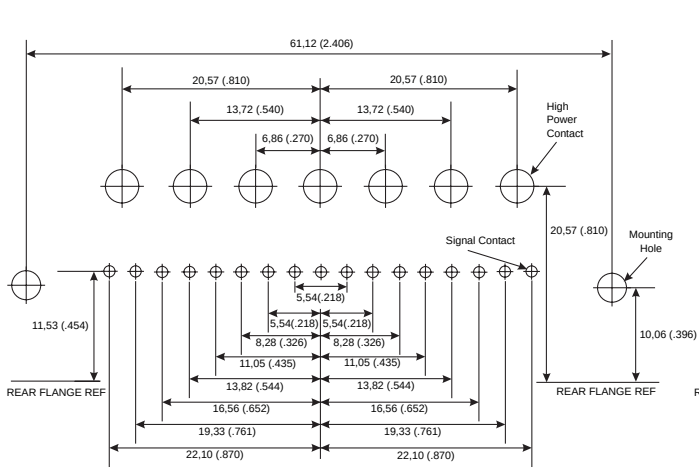

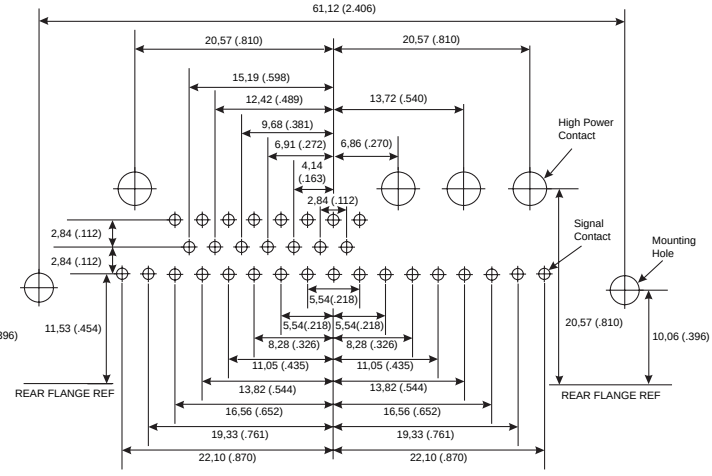

Shell Size	D	D
Contact Arrangement	24W7	36W4
No. of Size 20 Cavities	17 #20	32 #20
No. of Size 8 Cavities	7 #8	4 #8

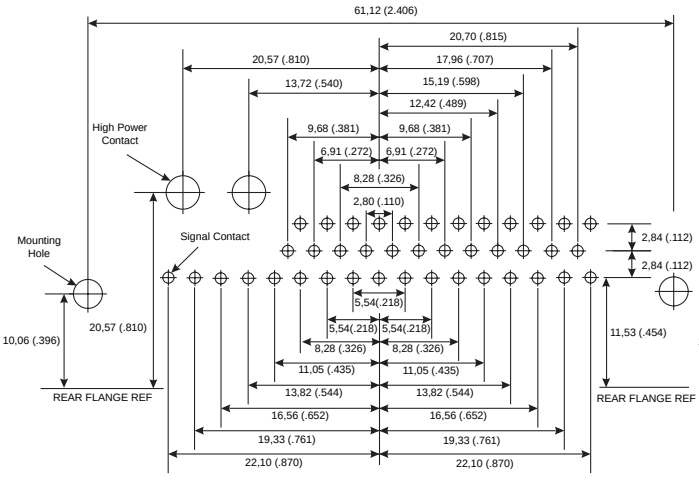

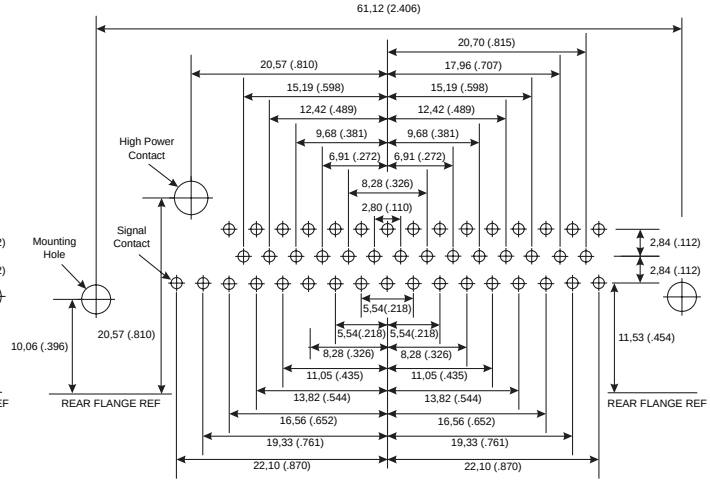

Shell Size	D	D
Contact Arrangement	43W2	47W1
No. of Size 20 Cavities	41 #20	46 #20
No. of Size 8 Cavities	2 #8	1 #8

Signal Contact ø	Recommended PCB Hole ø
0,76 (.030)	1,14 (.045)

Mounting Type	Recommended PCB Hole ø
Without Boardlock	3,05 (.120)
With Boardlock	3,10 (.122)

Size 8 Contact Type	Recommended PCB Hole ø
High Power (H)	3,56 (.140)

Dimensions shown in mm
Specifications and dimensions subject to change

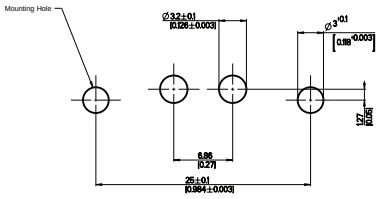

Shell Size	E
Contact Arrangement	2W2/2WK2
No. of Size 20 Cavities	0 #20
No. of Size 8 Cavities	2 #8

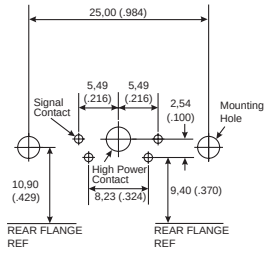

Shell Size	E
Contact Arrangement	5W1
No. of Size 20 Cavities	4 #20
No. of Size 8 Cavities	1 #8

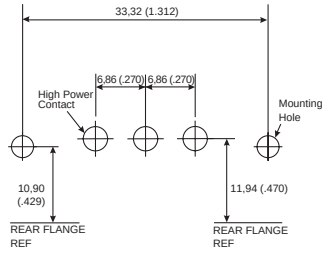

Shell Size	A
Contact Arrangement	3W3/3WK3
No. of Size 20 Cavities	0 #20
No. of Size 8 Cavities	3 #8

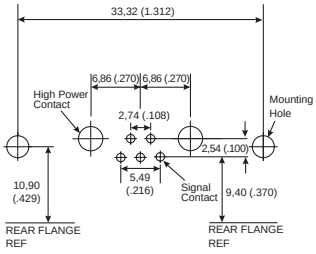

Shell Size	A
Contact Arrangement	7W2
No. of Size 20 Cavities	5 #20
No. of Size 8 Cavities	2 #8

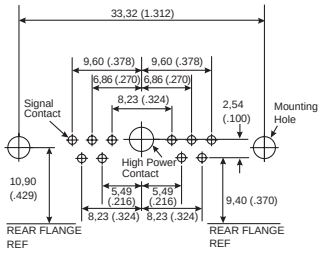

Shell Size	A
Contact Arrangement	11W1
No. of Size 20 Cavities	10 #20
No. of Size 8 Cavities	1 #8

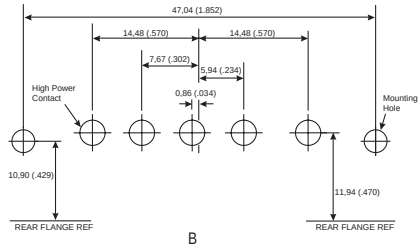

Shell Size	B
Contact Arrangement	5W5
No. of Size 20 Cavities	0 #20
No. of Size 8 Cavities	5 #8

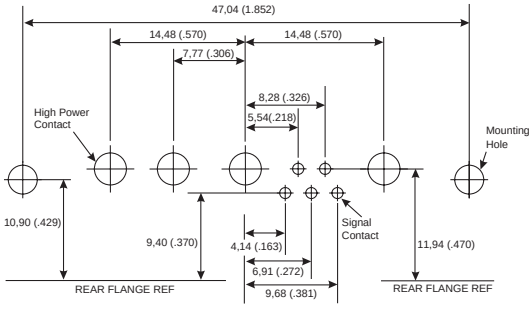

Shell Size	B
Contact Arrangement	9W4
No. of Size 20 Cavities	5 #20
No. of Size 8 Cavities	4 #8

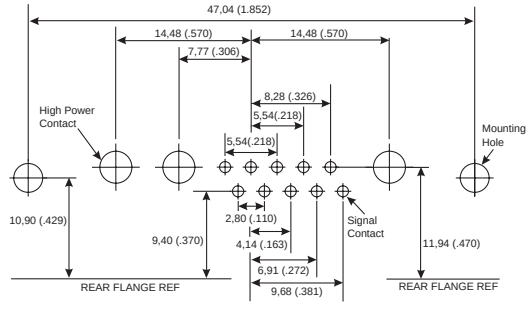

Shell Size	B
Contact Arrangement	13W3
No. of Size 20 Cavities	10 #20
No. of Size 8 Cavities	3 #8

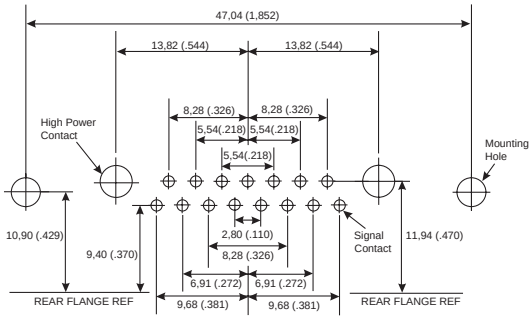

Shell Size	B
Contact Arrangement	17W2
No. of Size 20 Cavities	15 #20
No. of Size 8 Cavities	2 #8

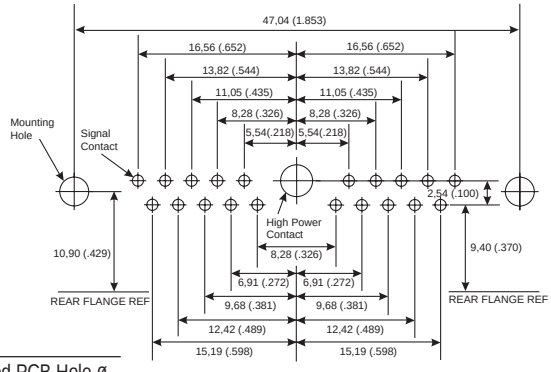

Shell Size	B
Contact Arrangement	21W1
No. of Size 20 Cavities	20 #20
No. of Size 8 Cavities	1 #8

Signal Contact ø	Recommended PCB Hole ø
0,60 (.024)	1,00 (.039)

Mounting Type	Recommended PCB Hole ø
Without Boardlock	3,05 (.120)
With Boardlock	3,10 (.122)

Size 8 Contact Type	Recommended PCB Hole ø
High Power (P)	3,28 (.129)

ITT

Dimensions shown in mm

Specifications and dimensions subject to change

www.ittcannon.com

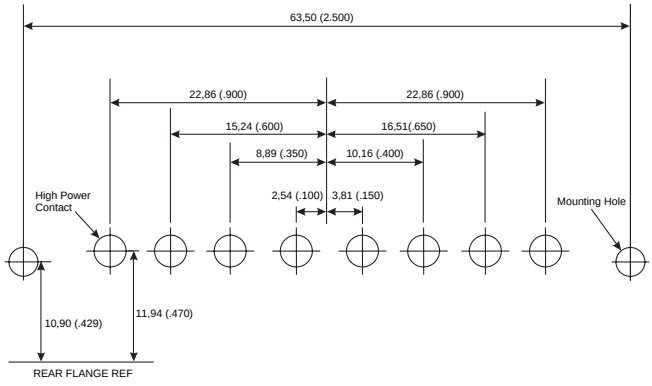

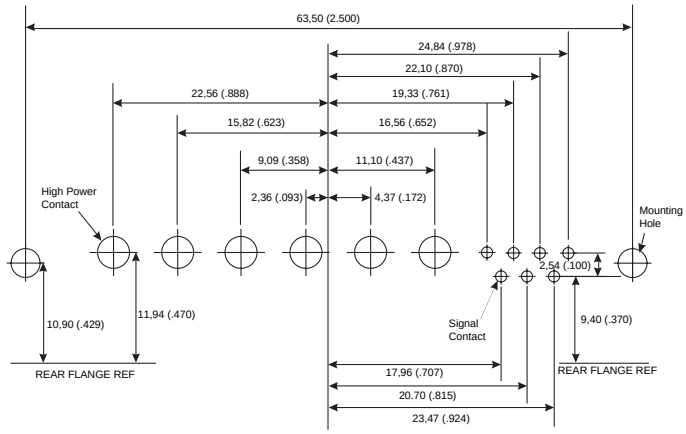

Shell Size	C	C
Contact Arrangement	8W8	13W6
No. of Size 20 Cavities	0 #20	7 #20
No. of Size 8 Cavities	8 #8	6 #8

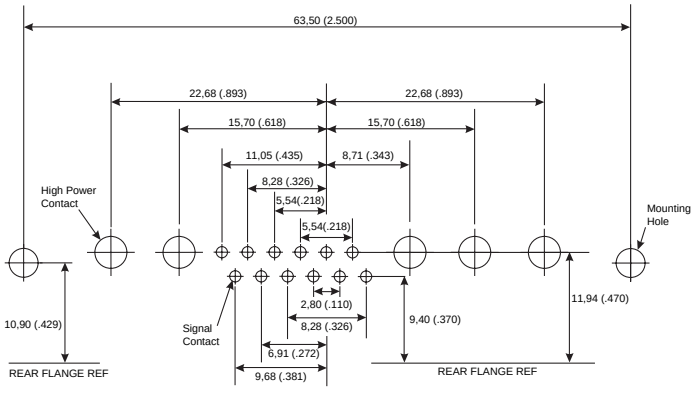

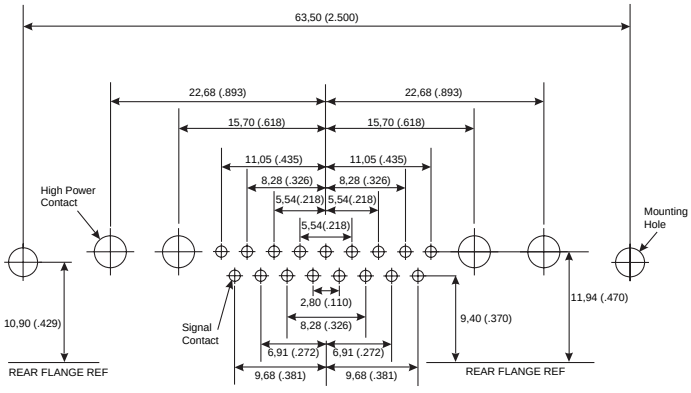

Shell Size	C	C
Contact Arrangement	17W5	21WA4
No. of Size 20 Cavities	12 #20	17 #20
No. of Size 8 Cavities	5 #8	4 #8

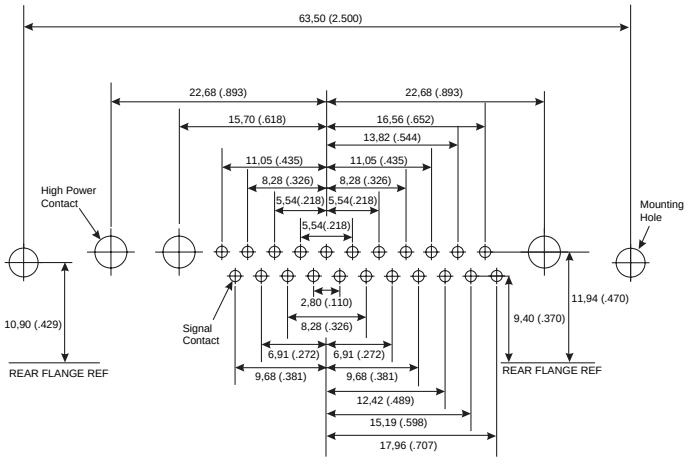

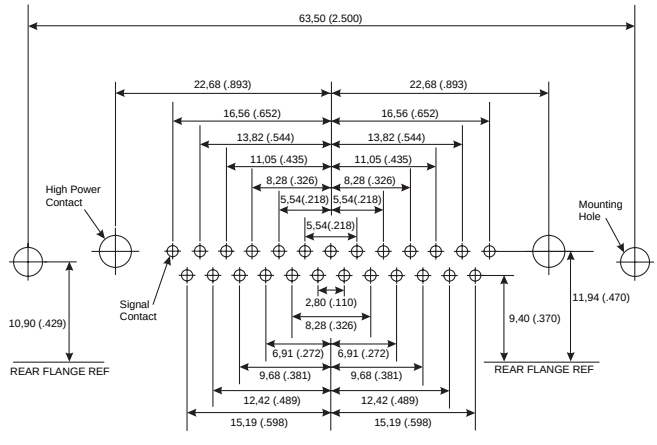

Shell Size	C	C
Contact Arrangement	25W3	27W2
No. of Size 20 Cavities	22 #20	25 #20
No. of Size 8 Cavities	3 #8	2 #8

Signal Contact ø	Recommended PCB Hole ø
0,60 (.024)	1,00 (.039)

Mounting Type	Recommended PCB Hole ø
Without Boardlock	3,05 (.120)
With Boardlock	3,10 (.122)

Size 8 Contact Type	Recommended PCB Hole ø
High Power (P)	3,28 (.129)

Dimensions shown in mm
Specifications and dimensions subject to change

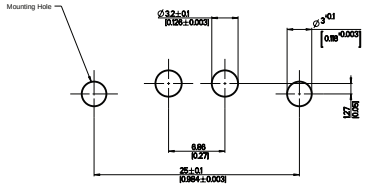

Shell Size	E
Contact Arrangement	2W2/2WK2
No. of Size 20 Cavities	0 #20
No. of Size 8 Cavities	2 #8

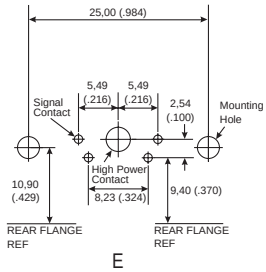

Shell Size	E
Contact Arrangement	5W1
No. of Size 20 Cavities	4 #20
No. of Size 8 Cavities	1 #8

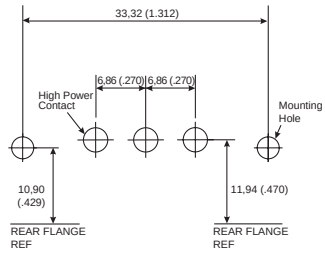

Shell Size	A
Contact Arrangement	3W3/3WK3
No. of Size 20 Cavities	0 #20
No. of Size 8 Cavities	3 #8

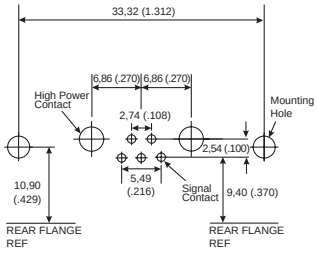

Shell Size	A
Contact Arrangement	7W2
No. of Size 20 Cavities	5 #20
No. of Size 8 Cavities	2 #8

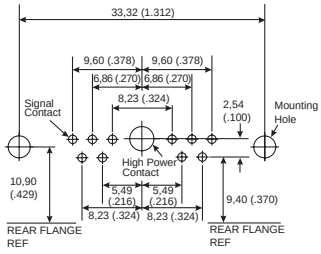

Shell Size	A
Contact Arrangement	11W1
No. of Size 20 Cavities	10 #20
No. of Size 8 Cavities	1 #8

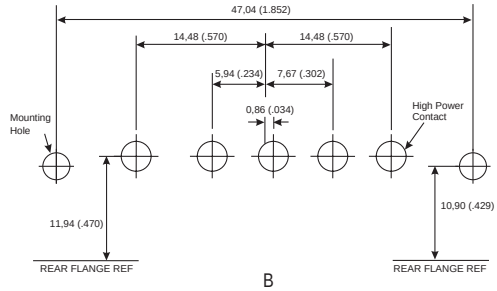

Shell Size	B
Contact Arrangement	5W5
No. of Size 20 Cavities	0 #20
No. of Size 8 Cavities	5 #8

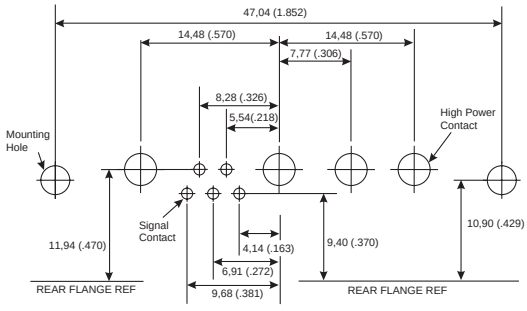

Shell Size	B
Contact Arrangement	9W4
No. of Size 20 Cavities	5 #20
No. of Size 8 Cavities	4 #8

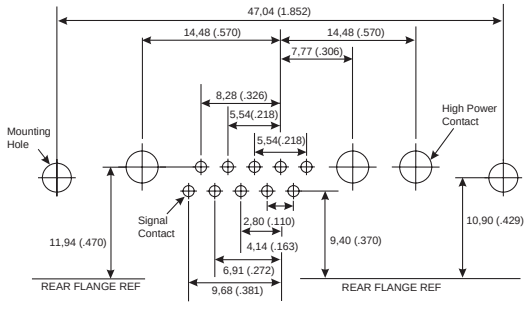

Shell Size	B
Contact Arrangement	13W3
No. of Size 20 Cavities	10 #20
No. of Size 8 Cavities	3 #8

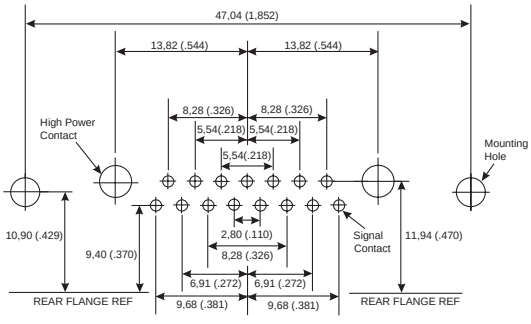

Shell Size	B
Contact Arrangement	17W2
No. of Size 20 Cavities	15 #20
No. of Size 8 Cavities	2 #8

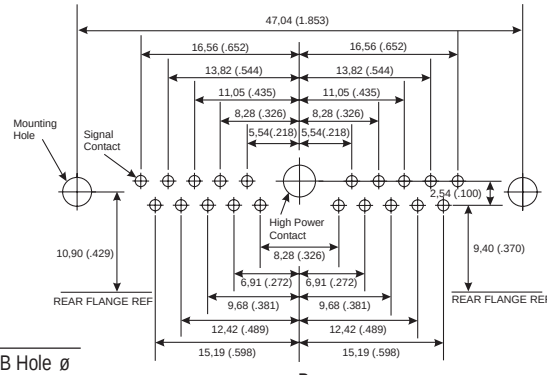

Shell Size	B
Contact Arrangement	21W1
No. of Size 20 Cavities	20 #20
No. of Size 8 Cavities	1 #8

Signal Contact ø	Recommended PCB Hole ø
0,60 (.024)	1,00 (.039)

Mounting Type	Recommended PCB Hole ø
Without Boardlock	3,05 (.120)
With Boardlock	3,10 (.122)

Size 8 Contact Type	Recommended PCB Hole ø
High Power (P)	3,28 (.129)

ITT

Dimensions shown in mm
Specifications and dimensions subject to change

www.ittcannon.com

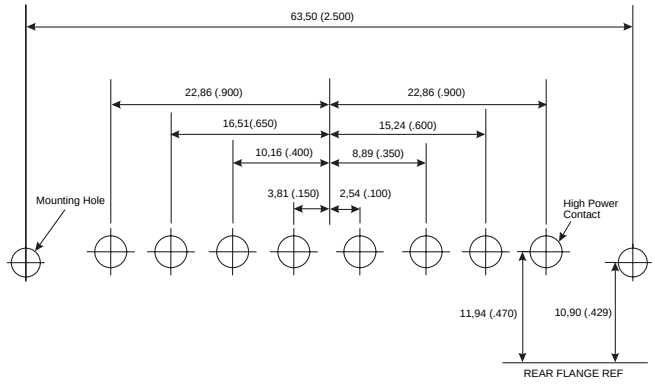

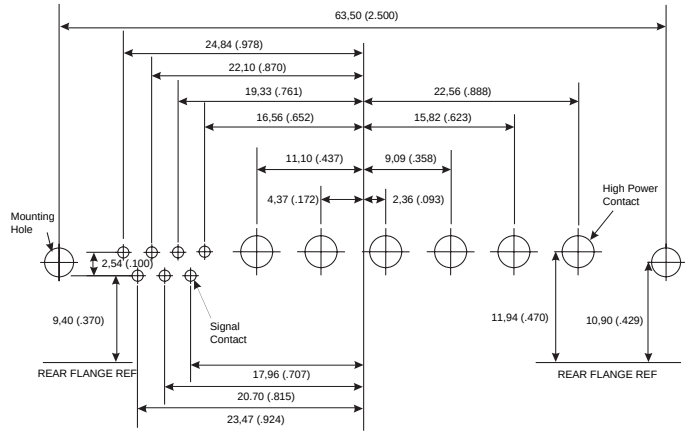

Shell Size	C	C
Contact Arrangement	8W8	13W6
No. of Size 20 Cavities	0 #20	7 #20
No. of Size 8 Cavities	8 #8	6 #8

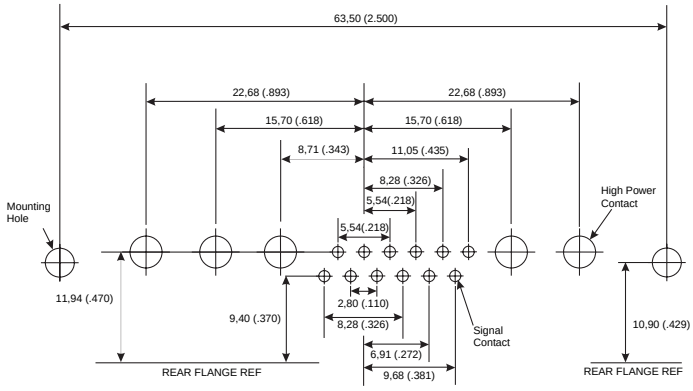

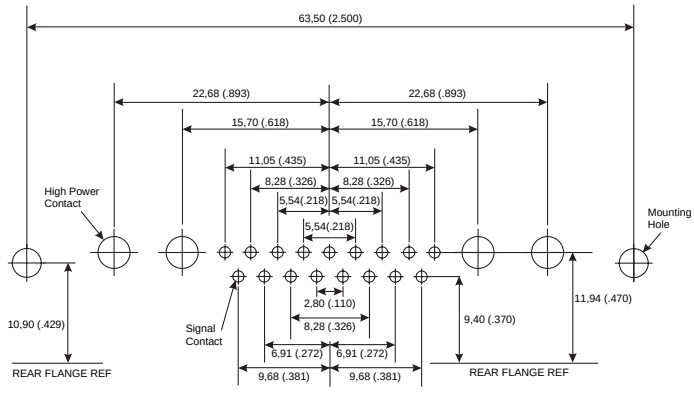

Shell Size	C	C
Contact Arrangement	17W5	21WA4
No. of Size 20 Cavities	12 #20	17 #20
No. of Size 8 Cavities	5 #8	4 #8

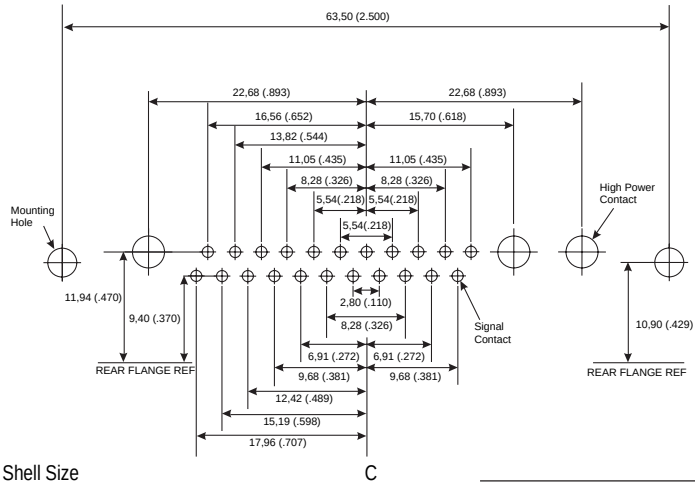

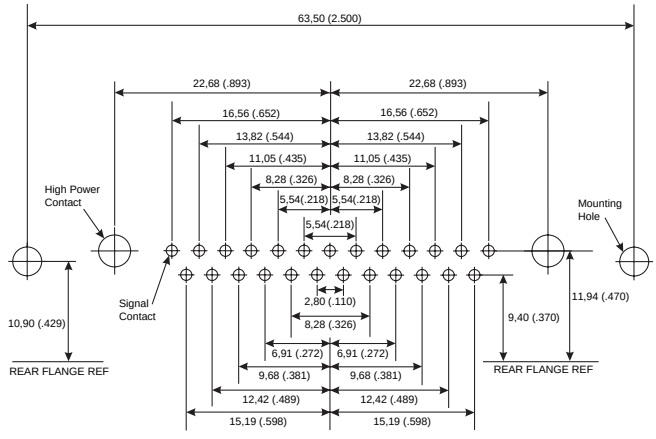

Shell Size	C	C
Contact Arrangement	25W3	27W2
No. of Size 20 Cavities	22 #20	25 #20
No. of Size 8 Cavities	3 #8	2 #8

Signal Contact ø	Recommended PCB Hole ø
0,60 (.024)	1,00 (.039)

Mounting Type	Recommended PCB Hole ø
Without Boardlock	3,05 (.120)
With Boardlock	3,10 (.122)

Size 8 Contact Type	Recommended PCB Hole ø
High Power (P)	3,28 (.129)

Dimensions shown in mm
Specifications and dimensions subject to change

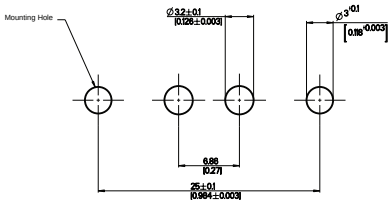

Shell Size	E
Contact Arrangement	2W2/2WK2
No. of Size 20 Cavities	0 #20
No. of Size 8 Cavities	2 #8

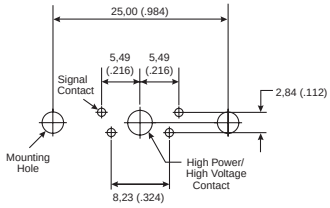

Shell Size	E
Contact Arrangement	5W1
No. of Size 20 Cavities	4 #20
No. of Size 8 Cavities	1 #8

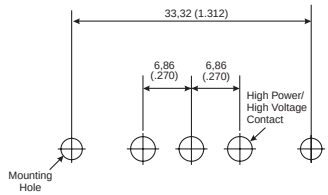

Shell Size	A
Contact Arrangement	3W3/3WK3
No. of Size 20 Cavities	0 #20
No. of Size 8 Cavities	3 #8

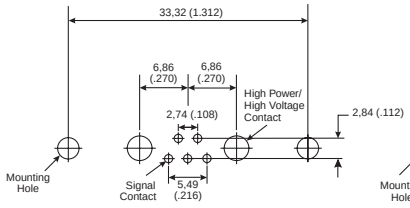

Shell Size	A
Contact Arrangement	7W2
No. of Size 20 Cavities	5 #20
No. of Size 8 Cavities	2 #8

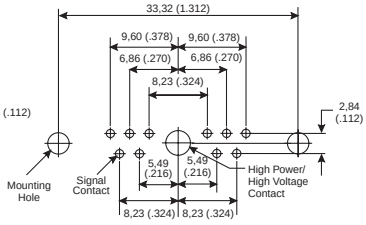

Shell Size	A
Contact Arrangement	11W1
No. of Size 20 Cavities	10 #20
No. of Size 8 Cavities	1 #8

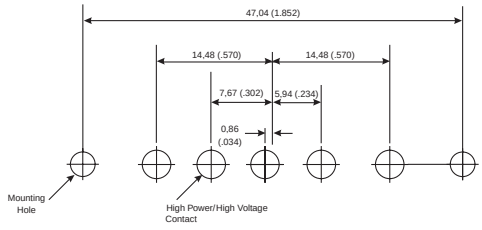

Shell Size	B
Contact Arrangement	5W5
No. of Size 20 Cavities	0 #20
No. of Size 8 Cavities	5 #8

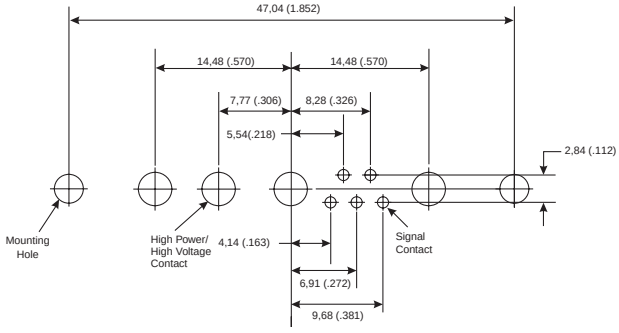

Shell Size	B
Contact Arrangement	9W4
No. of Size 20 Cavities	5 #20
No. of Size 8 Cavities	4 #8

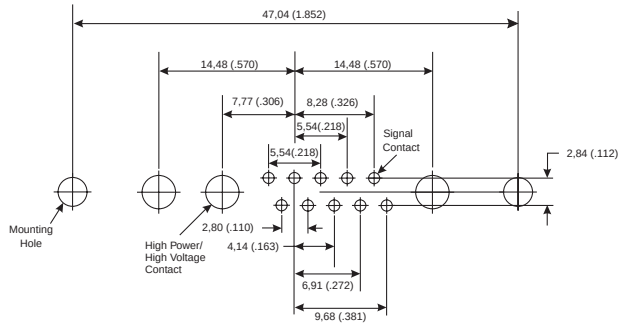

Shell Size	B
Contact Arrangement	13W3
No. of Size 20 Cavities	10 #20
No. of Size 8 Cavities	3 #8

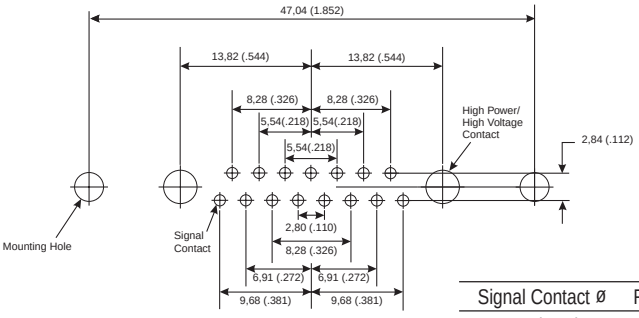

Shell Size	B
Contact Arrangement	17W2
No. of Size 20 Cavities	15 #20
No. of Size 8 Cavities	2 #8

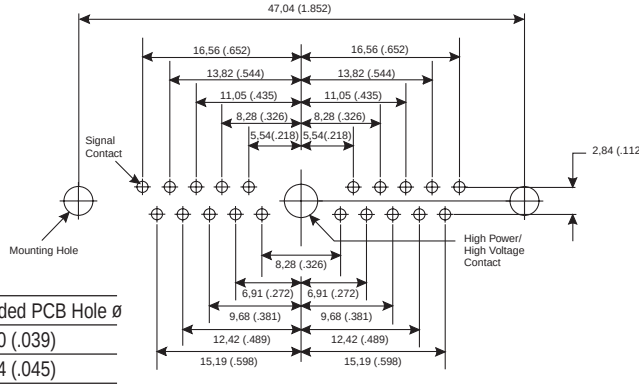

Shell Size	B
Contact Arrangement	21W1
No. of Size 20 Cavities	20 #20
No. of Size 8 Cavities	1 #8

Signal Contact ø	Recommended PCB Hole ø
0,60 (.024)	1,00 (.039)
0,76 (.030)	1,14 (.045)

Mounting Type	Recommended PCB Hole ø
Without Boardlock	3,05 (.120)
With Boardlock	3,10 (.122)

Size 8 Contact Type	Recommended PCB Hole ø
High Power (H)	3,56 (.140)
High Voltage (V)	1,96 (.077)

ITT

Dimensions shown in mm
Specifications and dimensions subject to change

www.ittcannon.com

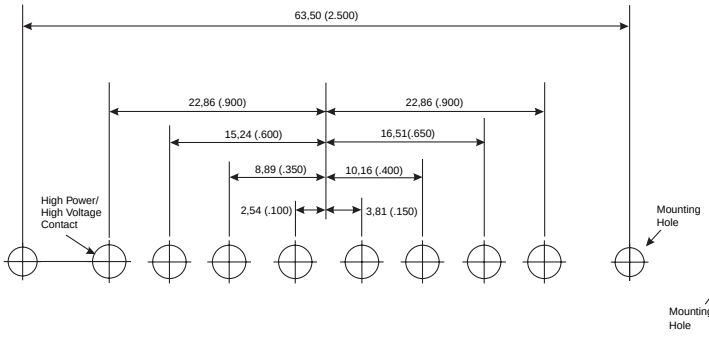

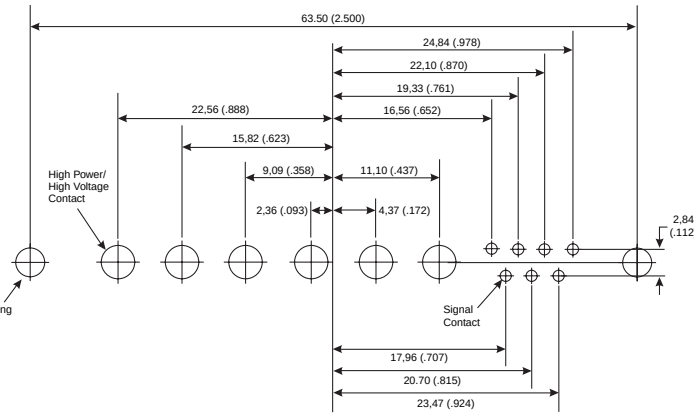

Shell Size	C
Contact Arrangement	8W8
No. of Size 20 Cavities	0 #20
No. of Size 8 Cavities	8 #8

C
13W6
7 #20
6 #8

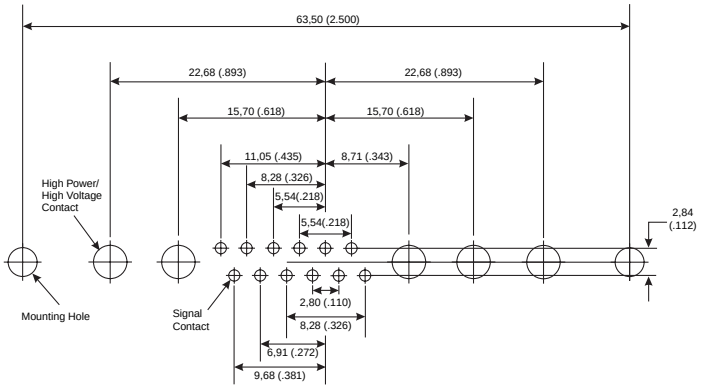

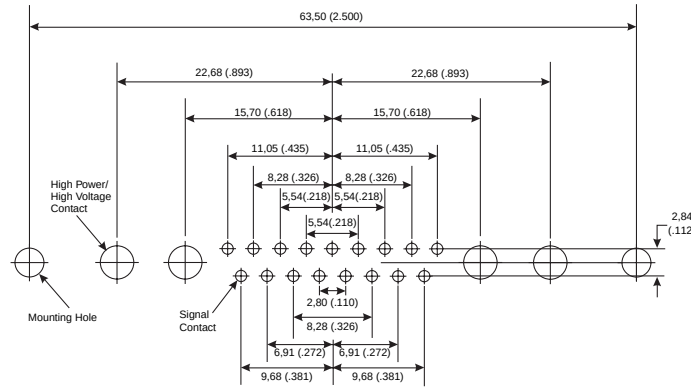

Shell Size	C
Contact Arrangement	17W5
No. of Size 20 Cavities	12 #20
No. of Size 8 Cavities	5 #8

C
21WA4
17 #20
4 #8

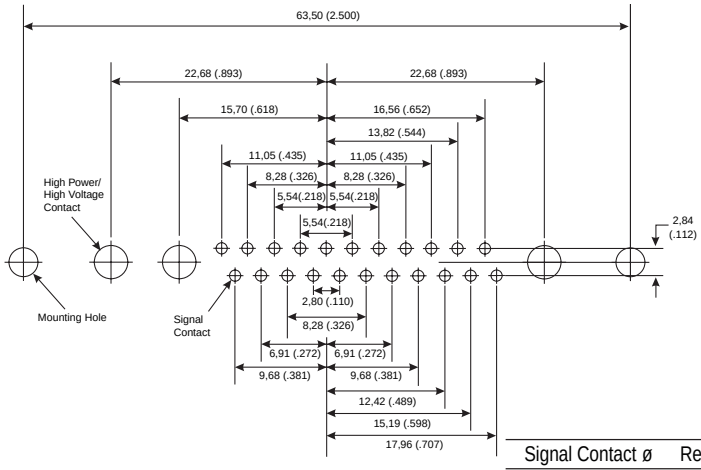

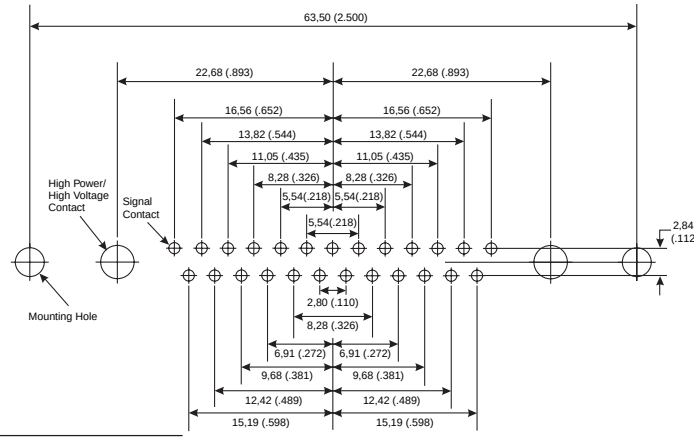

Shell Size	C
Contact Arrangement	25W3
No. of Size 20 Cavities	22 #20
No. of Size 8 Cavities	3 #8

C
27W2
25 #20
2 #8

Signal Contact ø	Recommended PCB Hole ø
0,60 (.024)	1,00 (.039)
0,76 (.030)	1,14 (.045)

Mounting Type	Recommended PCB Hole ø
Without Boardlock	3,05 (.120)
With Boardlock	3,10 (.122)

Size 8 Contact Type	Recommended PCB Hole ø
High Power (H)	3,56 (.140)
High Voltage (V)	1,96 (.077)

Dimensions shown in mm
Specifications and dimensions subject to change

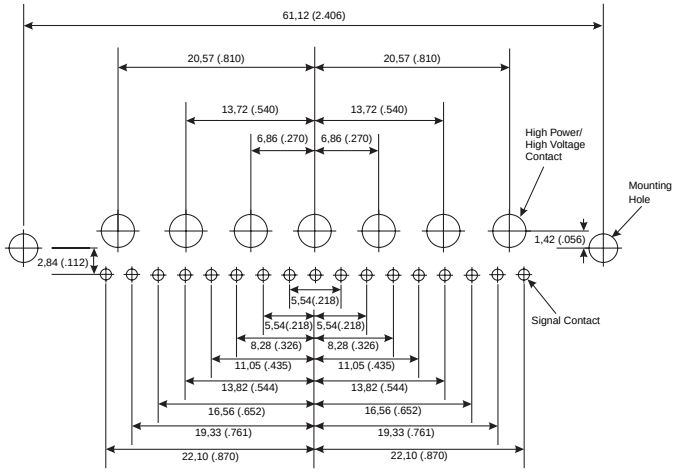

Shell Size	D
Contact Arrangement	24W7
No. of Size 20 Cavities	17 #20
No. of Size 8 Cavities	7 #8

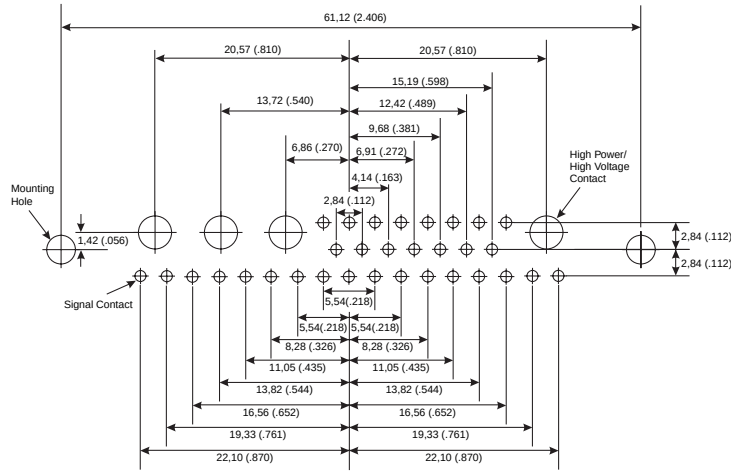

D	
36W4	
32 #20	
4 #8	

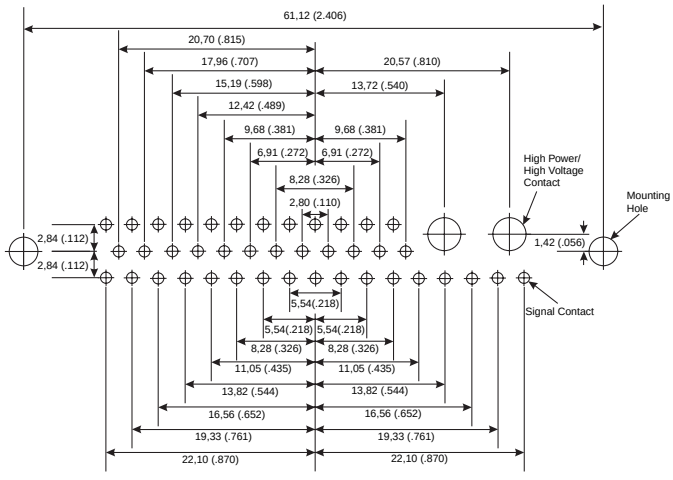

Shell Size	D
Contact Arrangement	43W2
No. of Size 20 Cavities	41 #20
No. of Size 8 Cavities	2 #8

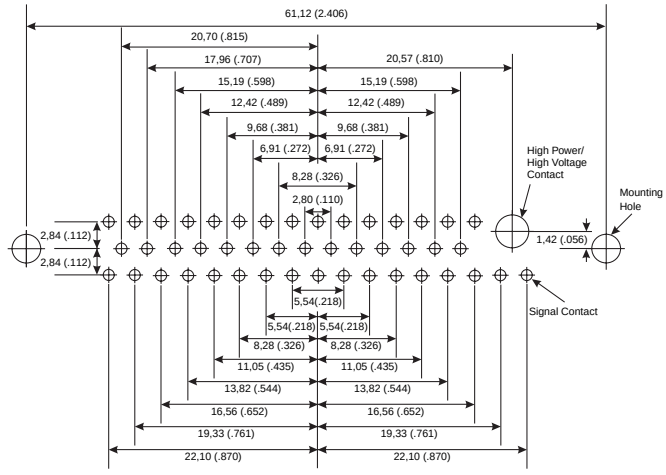

D	
47W1	
46 #20	
1 #8	

Signal Contact ø	Recommended PCB Hole ø
0,60 (.024)	1,00 (.039)
0,76 (.030)	1,14 (.045)

Mounting Type	Recommended PCB Hole ø
Without Boardlock	3,05 (.120)
With Boardlock	3,10 (.122)

Size 8 Contact Type	Recommended PCB Hole ø
High Power (H)	3,56 (.140)
High Voltage (V)	1,96 (.077)

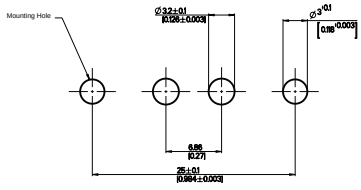

Shell Size	E
Contact Arrangement	2W2/2WK2
No. of Size 20 Cavities	0 #20
No. of Size 8 Cavities	2 #8

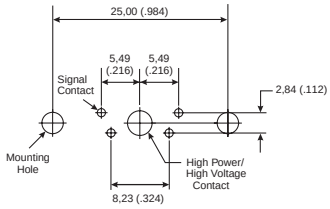

Shell Size	E
Contact Arrangement	5W1
No. of Size 20 Cavities	4 #20
No. of Size 8 Cavities	1 #8

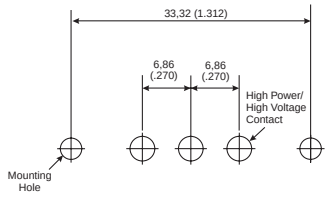

Shell Size	A
Contact Arrangement	3W3/3WK3
No. of Size 20 Cavities	0 #20
No. of Size 8 Cavities	3 #8

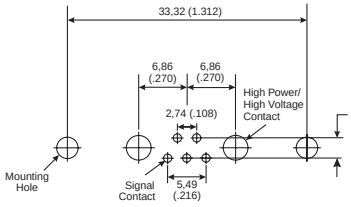

Shell Size	A
Contact Arrangement	7W2
No. of Size 20 Cavities	5 #20
No. of Size 8 Cavities	2 #8

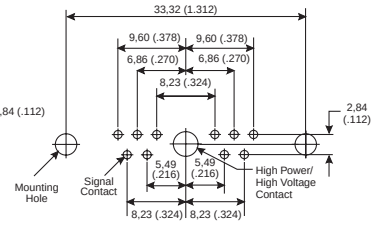

Shell Size	A
Contact Arrangement	11W1
No. of Size 20 Cavities	10 #20
No. of Size 8 Cavities	1 #8

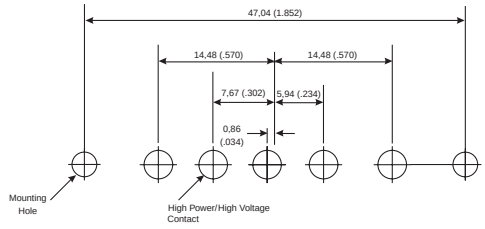

Shell Size	B
Contact Arrangement	5W5
No. of Size 20 Cavities	0 #20
No. of Size 8 Cavities	5 #8

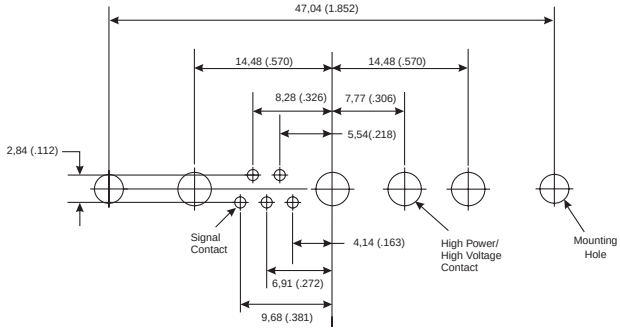

Shell Size	B
Contact Arrangement	9W4
No. of Size 20 Cavities	5 #20
No. of Size 8 Cavities	4 #8

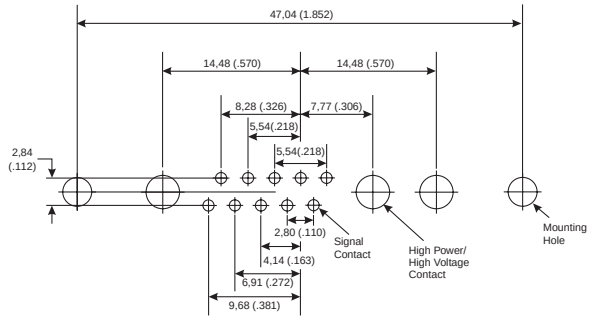

Shell Size	B
Contact Arrangement	13W3
No. of Size 20 Cavities	10 #20
No. of Size 8 Cavities	3 #8

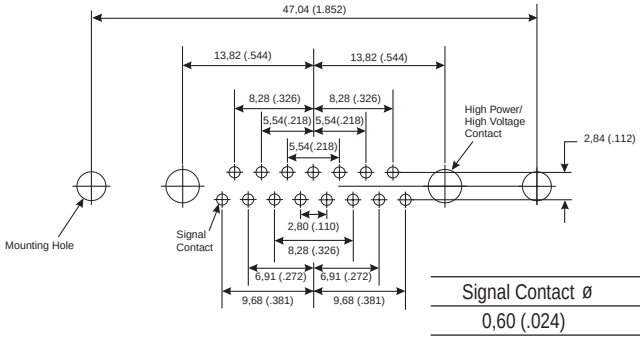

Shell Size	B
Contact Arrangement	17W2
No. of Size 20 Cavities	15 #20
No. of Size 8 Cavities	2 #8

Signal Contact ø	Recommended PCB Hole ø
0,60 (.024)	1,00 (.039)
0,76 (.030)	1,14 (.045)

Mounting Type	Recommended PCB Hole ø
Without Boardlock	3,05 (.120)
With Boardlock	3,10 (.122)

Size 8 Contact Type	Recommended PCB Hole ø
High Power (H)	3,56 (.140)
High Voltage (V)	1,96 (.077)

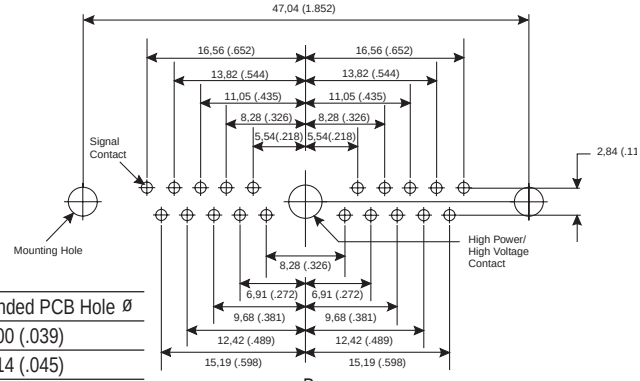

Shell Size	B
Contact Arrangement	21W1
No. of Size 20 Cavities	20 #20
No. of Size 8 Cavities	1 #8

Dimensions shown in mm
Specifications and dimensions subject to change

www.ittcannon.com

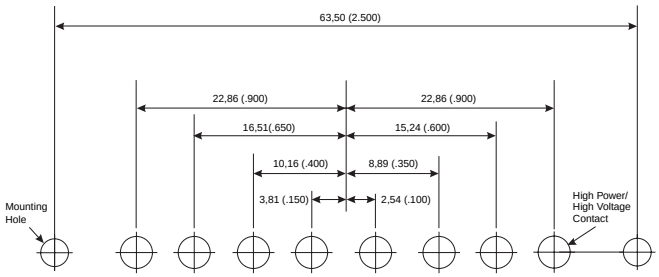

Shell Size	C
Contact Arrangement	8W8
No. of Size 20 Cavities	0 #20
No. of Size 8 Cavities	8 #8

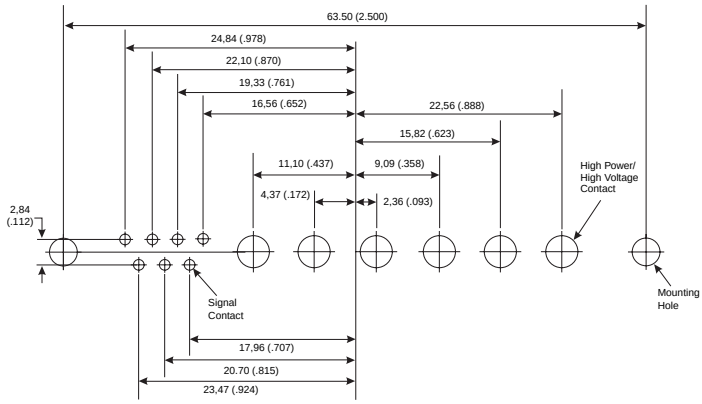

C	
13W6	
7 #20	
6 #8	

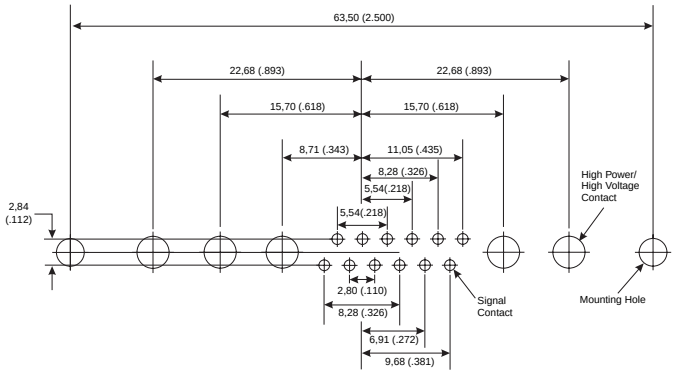

Shell Size	C
Contact Arrangement	17W5
No. of Size 20 Cavities	12 #20
No. of Size 8 Cavities	5 #8

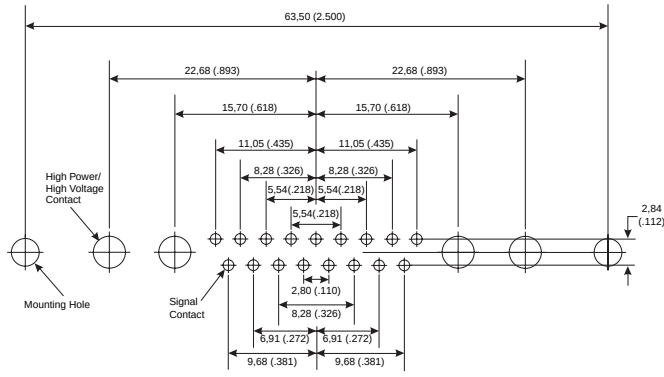

C	
21WA4	
17 #20	
4 #8	

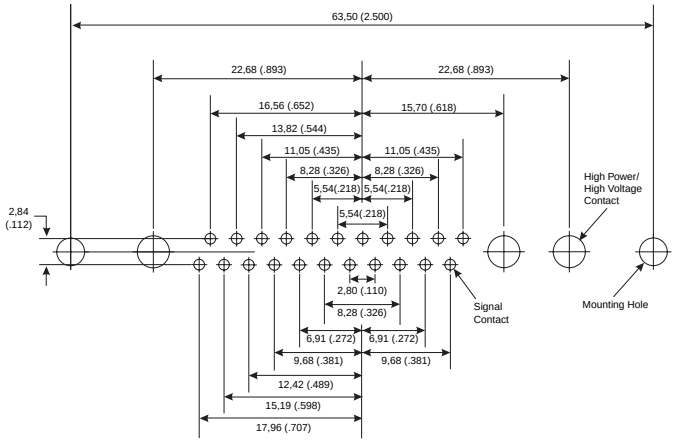

Shell Size	C
Contact Arrangement	25W3
No. of Size 20 Cavities	22 #20
No. of Size 8 Cavities	3 #8

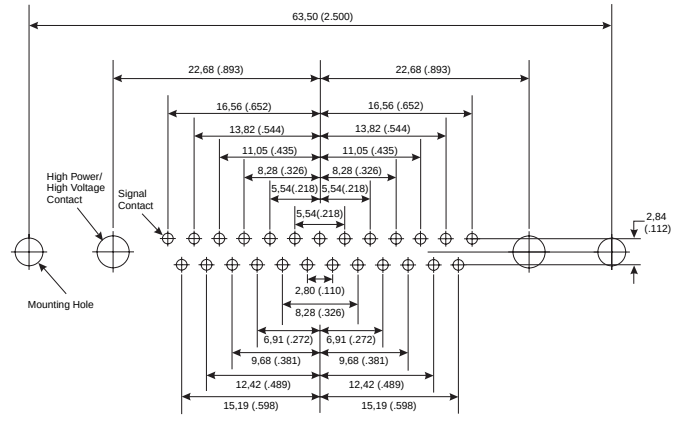

C	
27W2	
25 #20	
2 #8	

Signal Contact ø	Recommended PCB Hole ø
0,60 (.024)	1,00 (.039)
0,76 (.030)	1,14 (.045)

Mounting Type	Recommended PCB Hole ø
Without Boardlock	3,05 (.120)
With Boardlock	3,10 (.122)

Size 8 Contact Type	Recommended PCB Hole ø
High Power (H)	3,56 (.140)
High Voltage (V)	1,96 (.077)

Automatic/Semi-Automatic Tooling

ITT Cannon can provide automatic and semi-automatic tooling for automated stripping and crimping of contacts for insertion. Please contact your local ITT Cannon representative for more information.

ABT-607

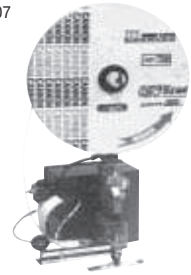

Products: D*A, MDSM, 75 Ohm Crimp Coax

ABT-620 UCCS



Products: D*A, MDSM

CBT-646

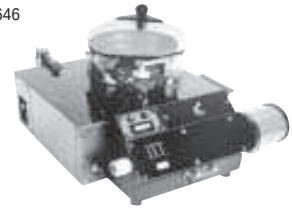

Products: D*MA

HACS-2-DA

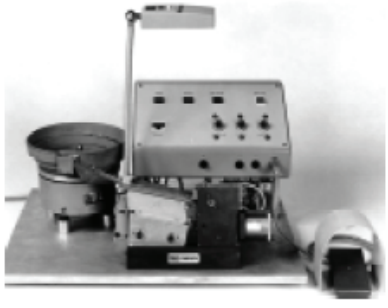

CCT-DA



CBT-565

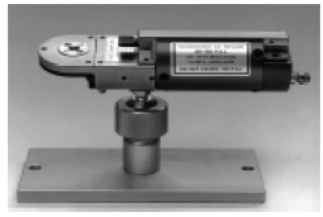

M22520-2-01



ACT2500/3500

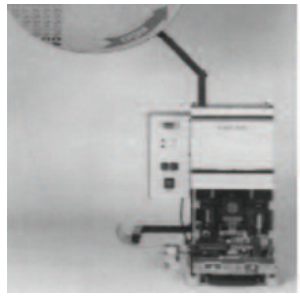

4510

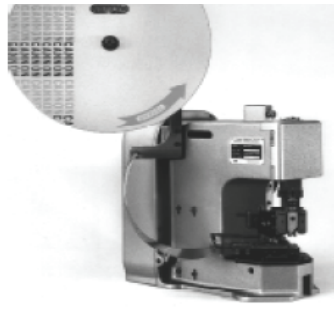

CIET-20-HDL

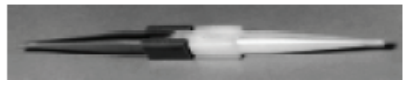

CET-20-D



Dimensions shown in mm
Specifications and dimensions subject to change

Obsolete Products

General Application Connectors ♦

D*C	*Burgun D* with snap-in, rear release machined or stamped crimp contacts. Refer to D*U products.	D*PF	Straight and 90° PCB applications, UL 94V-0 rated. Refer to D* products.	D*11148 D*(SMT)	SMT – Surface Mount D, no replacement, only through holes available. Refer to ZED* products.
D*P	90º connectors for I/O applications, UL 94V-0 rated. Refer to D*U products	AD*	Part number change only. Refer to ZD* products. Replace “A” with “Z” for current part number.	D*P1	Machined pressfit replaced by stamped pressfit. Refer to D*NG products.
				D*TC	Part number change only. Refer to D* products.

Available Products Not Listed Within This Publication

General Application Connectors ♦

D*U	*Burgun D* with snap-in, rear release machined or stamped crimp contacts, UL 94V-0 rated.	D*MA	Military specification quality removable crimp style contacts for high performance applications.
D*SF	*Speedy D* for IDC ribbon cable, UL 94V-0 rated, accomodates Sizes 28-26 AWG cable on 1,27 (.050) conductor spacing.	ZD*	Low cost, stamped contacts, high density 90° PCB connectors.
		D*M	Standard 9, 15, 25, 37 and 50 position layouts machined contacts.

Special Application Connectors ♦ ♦

GD*	*Grommet D* environmentally sealed, crimp, snap-in, rear release contacts.
D*D	Environmentally sealed, cast aluminium shell. Product not intermatable with M24308-type D Subminiature connectors.

♦ Commercial Applications Only

♦ ♦ Military or Commercial Applications

Consult factory for details.

1. MATERIAL CONTENT AND PHYSICAL FORM

Electrical connectors do not usually contain hazardous materials. They contain conducting and non-conducting materials and can be divided into two groups.

a) Printed circuit types and low cost audio types which employ all plastic insulators and casings.

b) Rugged, Fire Barrier and High Reliability types with metal casings and either natural rubber, synthetic rubber, plastic or glass insulating materials. Contact materials vary with type of connector and also application and are usually manufactured from either: Copper, copper alloys, nickel, alumel, chromel or steel. In special applications, other alloys may be specified.

2. FIRE CHARACTERISTICS AND ELECTRIC SHOCK HAZARD

There is no fire hazard when the connector is correctly wired and used within the specified parameters. Incorrect wiring or assembly of the connector or careless use of metal tools or conductive fluids, or transit damage to any of the component parts may cause electric shock or burns. Live circuits must not be broken by separating mated connectors as this may cause arcing, ionization and burning. Heat dissipation is greater at maximum resistance in a circuit. Hot spots may occur when resistance is raised locally by damage, e.g. cracked or deformed contacts, broken strands of wire. Local overheating may also result from the use of the incorrect application tools or from poor quality soldering or slack screw terminals. Overheating may occur if the ratings in the product Data Sheet/Catalog are exceeded and can cause breakdown of insulation and hence electric shock. If heating is allowed to continue it intensifies by further increasing the local resistance through loss of temper of spring contacts, formation of oxide film on contacts and wires and leakage currents through carbonization of insulation and tracking paths. Fire can then result in the presence of combustible materials and this may release noxious fumes. Overheating may not be visually apparent. Burns may result from touching overheated components.

3. HANDLING

Care must be taken to avoid damage to any component parts of electrical connectors during installation and use. Although there are normally no sharp edges, care must be taken when handling certain components to avoid injury to fingers. Electrical connectors may be damaged in transit to the customers, and damage may result in creation of hazards. Products should therefore be examined prior to installation/use and rejected if found to be damaged.

4. DISPOSAL

Incineration of certain materials may release noxious or even toxic fumes.

5. APPLICATION

Connectors with exposed contacts should not be selected for use on the current supply side of an electrical circuit, because an electric shock could result from touching exposed contacts on an unmated connector. Voltages in excess of 30 V ac or 42.5 V dc are potentially hazardous and care should be taken to ensure that such voltages cannot be transmitted in any way to exposed metal parts of the connector body. The connector and wiring should be checked, before making live, to have no damage to metal parts or insulators, no solder blobs, loose strands, conducting lubricants, swarf, or any other undesired conducting particles. Circuit resistance and continuity check should be made to make certain that there are no high resistance joints or spurious conducting paths. Always use the correct application tools as specified in the Data Sheet/Catalog. Do not permit untrained personnel to wire, assemble or tamper with connectors. For operation voltage please see appropriate national regulations.

IMPORTANT GENERAL INFORMATION

(i) Air and creepage paths/Operating voltage. The admissible operating voltages depend on the individual applications and the valid national and other applicable safety regulations.

For this reason the air and creepage path data are only reference values. Observe reduction of air and creepage paths due to PC board and/or harnessing.

(ii) Temperature

All information given are temperature limits. The operation temperature depends on the individual application.

(iii) Other important information

Cannon continuously endeavors to improve their products. Therefore, Cannon products may deviate from the description, technical data and shape as shown in this catalog and data sheets.

ITT Cannon, a Division of ITT Inc., manufactures the highest quality products available in the marketplace; however these products are intended to be used in accordance with the specifications in this publication. Any use or application that deviates from the stated operating specifications is not recommended and may be unsafe. No information and data contained in this publication shall be construed to create any liability on the part of Cannon. Any new issue of this publication shall automatically invalidate and supersede any and all previous issues.

ITAR

Commodities in this catalog may be controlled for export by the International Traffic in Arms Regulations (ITAR) and Export Administration Regulations (EAR) when specifically designed modified, or configured for articles ctrolled by the United States Government.



Circular/Filter/Hermetic Connectors

As a world leader in circular, filter, and hermetic connectors, ITT can leverage its design and manufacturing expertise to fit virtually any application. Our expertise includes fast positive mating for a wide range of military applications, as well as numerous sizes and contact configurations for various harsh environments.



D-Subminiature Connectors

Cannon invented D-sub connectors in 1952. Our family of D-Subs now includes combinations of signal, power and RF, as well as severe service sealed connectors. Cannon D-Subs are available with an extensive line of backshells and accessories and are one of the most economical shielded connector solutions available.

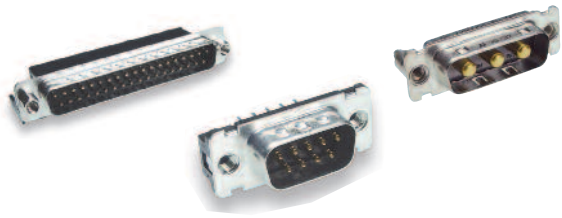

Fiber Optic Connectors and Cable Assemblies

Cannon fiber optic solutions provide an excellent performance/ cost value. Performance may be tailored to the end system, with our use of superior materials and bonding agents providing highly effective solutions. Our wide variety of products include fiber optic hybrid contacts, multi-channel, rack and panel and hi-rel assemblies.



Microminiature Connectors

Developed first by Cannon in the 1960s, Microminiature Connectors offer high performance and reliability with exceptional versatility. Available in rectangular, circular and strip-style configurations for countless applications, many of our highly engineered Microminiature connector products meet critical customer demands in multiple applications across the Aerospace & Defense industry.



Rack and Panel Connectors

Pioneered by Cannon during the 1930s, our Rack & Panel Connectors offer an unmatched variety of shell configurations and insert arrangements, as well as materials, plating and contact options. Today, we are recognized as an industry leader, offering an unparalleled range of off-the-shelf and custom Rack & Panel products to align with customer needs.

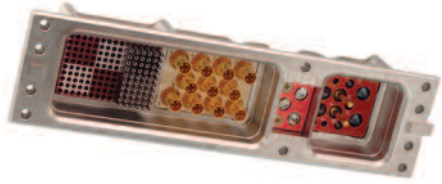

RF Connectors

ITT Cannon has been providing interconnect products to the Microwave and RF industry since 1963 (formerly The Sealectro Corporation). The RF 50 & 75 Ohm product lines cover UHF band through Ku band requirements. These connectors and cable assemblies are available with a thread type, snap type, bayonet type or slide on coupling method. The frequencies range from DC to 18+ GHz.

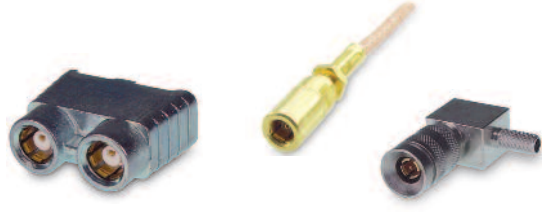

ITT Cannon is a leading global manufacturer of connector products serving international customers in the aerospace and defense, medical, energy, transportation and industrial end markets. Whether delivering critical specs to aircraft pilots, streaming data through communications satellites or enabling ultrasound technology that gives an expectant mother the first glimpse of her unborn child, Cannon connects the world's most important information with the people who need it. **To learn more, visit www.ittcannon.com**

ITT

Customer Support Locations

CHINA
Tuopandun Industrial Area, Jinda Cheng,
Xiner Village, Shajing Town,
Baoan District, Shenzhen City,
Guangdong, China 518125
Phone: +86.755.2726.7888
Fax: +86.755.2726.7515

GERMANY
Cannonstrasse 1
Weinstadt, 71384
phone: +49.7151.699.0
fax: +49.7151.699.217

FRANCE
15, Boulevard Robert Thiboust
Serris, France 77700
phone: +33.1.60.04.93.93
fax: +33.1.60.04.93.90

HONG KONG
Units 2405-6, 24/F, ING Tower
308 Des Voeux Road
Central
Hong Kong
phone: +852.2732.2720
fax: +852.2732.2919

ITALY
Corso Europa 41/43
Lainate (MI),
Italy 20020
phone: +39.02938721
fax: +39.0293872300

JAPAN
11-3, 5 Chome, Hibarigaoka, Zama-shi
Kanagawa, Japan 228-0003
phone: +81.462.57.2010
fax: + 81.462.57.1680

UK
Jays Close, Viables Estate
Basingstoke, RG22 4BA
phone: +44.1256.347400
fax: +44.1256.323356

USA
56 Technology Drive
Irvine, CA 92618
phone: +1.800.854.3028
fax: +1.714.628.2142

www.ittcannon.com

©2017 ITT Inc. "ITT Engineered Blocks" symbol, "Engineered for life" and "Cannon" are registered trademarks of ITT Inc. Specification and other data are based on information available at the time of printing, and are subject to change without notice.

Our facility is not currently certified by the DLA and this product is not covered by the QPL/QML.