VEAM

CIR Series

ITT

ENGINEERED FOR LIFE

ITT Corporation is a diversified leading manufacturer of highly engineered critical components and customized technology solutions for industrial end-markets in energy infrastructure, electronics, aerospace and transportation. Building on its heritage of innovation, ITT partners with its customers to deliver enduring solutions to the key industries that underpin our modern way of life. Founded in 1920, ITT is headquartered in White Plains, N.Y., with employees in more than 30 countries and sales from a total of 125 countries which generated a 2011 revenue of $2.1 billion.

Our award-winning connector portfolio continues to be an industry innovator, offering a reliable and cost effective range of interconnect solutions with the brands of Cannon, VEAM and BIW Connector Systems. Continuous investment in technology and research & development have enabled ITT to provide new, innovative
products and solutions to markets including:

- Automotive
- Computer & Consumer Electronics
- Industrial/Instrumentation
- Military & Aerospace
- Oil & Gas
- Telecommunications/Wireless Handheld Devices
- Transportation

When you specify a Cannon, VEAM or BIW Connector Systems connector, you can rely on products that are designed, developed, and manufactured to the highest quality and reliability standards. This tradition of excellence is based on ITT's corporate culture of operating its businesses under the principles of Six Sigma. At ITT, Six Sigma is not just a quality philosophy but a complete corporate culture that drives the entire business. Our Value Based Management and Value Based Product Development systems are two cornerstones that allow for the development of both leadership and product engineering principles, ensuring our industry leading products are developed to the accepted market driven lead times. These principles have allowed ITT to become the market leader in all of our business portfolios.

Six Sigma Manufacturing

ITT operates manufacturing facilities in the United States, Germany, Italy, Mexico, China, Japan and the UK, all of which have particular product area strengths allowing ITT to offer a truly global footprint to our customers. Our facilities are world class and accommodate full vertical integration utilizing the latest manufacturing technologies including: manufacturing cells, Kanban pull systems, and automated electrical, mechanical, and optical test and inspection equipment. The combination of our manufacturing strength and our advanced manufacturing facilities allows ITT to offer products at market driven prices. Our capabilities, especially in robotics, computerized precision tooling,

Kaizen Project Management, Six Sigma tools, and testing, give ITT the most optimized global manufacturing footprint in the interconnect industry.

The Custom Difference

As the industry leader in harsh environment interconnect applications, ITT's world class engineering teams will work directly with our customers to design and develop cost effective solutions for their applications. In many cases we may modify one of our standard designs to ensure a highly reliable solution where timing is critical. Yet, in those cases where a complete custom interconnect solution is required, ITT will work with our customer's Engineers to design an interconnect solution which will be cost effective yet highly reliable. Our Engineering teams will provide a thorough systems and mechanical analysis of any proposed solution. These analyses provide our customers with sophisticated electrical signal and mechanical characterizations to determine the best solution for their application.

RoHS Compliance Information

ITT has implemented a strict parts control plan for all ITT electronics plants worldwide that allows the Cannon, VEAM, and BIW Connector Systems product portfolios to meet the requirements of the European Union Directive 2002/95/EC better know as the Reduction of Hazardous Substances initiative. As appropriate, specific Cannon, VEAM, and BIW Connector Systems products may be ordered with an R prefix number which insures our customers will receive RoHS compliant parts for their commercial electronics applications and equipment. Since most RoHS hazardous substances center around specific metal plating and lead solder coatings, ITT's products for RoHS compliance are available in the following plating finishes: electroless nickel, stainless steel, anodize over aluminum and gold plating. It should be noted that gold plating would be recommended as the replacement for tin-lead solder when ordering board mount connectors.

Introduction	Page 6
General Specification	Page 7
Part Number Generation	Page 10
Electrical Data	Page 12
Mechanical Data	Page 13
Inserts by Contact Quantity	Page 26 - 31
Inserts by Shell Sizes	Page 32 - 34
Insert Rotation - Alternate Positions	Page 35 - 36
Contact Selection Based on Wire Diameter	Page 14 - 15
Contact Dimensions	Page 16 - 21
Coaxial Contacts	Page 22 - 25
PCB Terminations	Page 70 - 73
Insert Arrangements Pictorials	Page 37 - 50
Connector Selection	Page 74 - 75
Class Overview	Page 76 - 86
Reduction Sleeve and Hole Plugs	Page 193 - 194
Connector Mounting Options	Page 195 - 197
Additional CIR Options (CIR020R/00, CIR064PP, CIR05)	Page 198
Accessories (caps, gaskets, clamps, bushings)	Page 199 - 202
Tools	Page 204 - 209
Additional Connector Series	Page 3 - 5 & 210, 211, 213

While the information in this publication is belived to be accurate and reliable, all data presented is subject to change without notice.
VEAM disclaims responsibility for any damages resulting from application or any incompleteness or inaccuracies presented.
Consult factory for specific information on the latest design specifications.

Offering the broadest selection of transportation interconnect solutions, ITT is the one stop source for design, development, manufacturing, and testing.

ITT offers Cannon, VEAM, and BIW Connector Systems product lines designed specifically for transit applications. These product lines come in a large style of shell sizes and contact arrangements to meet the most demanding applications, both electrical and optical. Inserts to meet low smoke/zero halogen and RoHS requirements are also available. ITT provides complete harnessing solutions and junction boxes.

As the industry leader in harsh environment interconnect applications, ITT's world class engineering teams will work directly with our customers to design and develop cost effective solutions for their applications. In many cases we may modify one of our standard designs to ensure a reliable solution where timing is critical. Yet, in those cases where a complete custom interconnect solution is required, ITT will work with our customer's Engineers to design an interconnect solution which will be cost effective yet highly reliable.

VEAM VBN

Circular connectors with rigid insert according to NF F 61030 regulations. Field configurable, allows easy and quick harnessing. Suitable both for signal and power.

VEAM CIR High Temperature Connector

The new European standards series CEN/TS 45545 for fire rail safety regulations requires a connector able to withstand for 15 minutes when exposed to the ISO 834-1 heating curve (max Temperature 800°C). The VEAM CIR High Temp connector meets this standard.

Applications

- Critical control signals
- Fire resistant applications

Cannon CA Bayonet

VG/CA-Bayonet signal and power connectors provide superior performance in extreme environmental conditions. They offer exceptional sealing against the ingress of fluids and will withstand the effects of high vibration. In accordance to VG95234.

Applications

- Control panel connections
- Intervehicle applications
- Communications equipment
- CCTV equipment

VEAM CIR and FRCIR Standard

Multipurpose bayonet circular connectors. 1 up to 159 solder or crimp contacts. Both for signal and power. In accordance to VG95234.

Applications

- Control switchboard connections
- Control panel connections

VEAM FRMGCIR

Multipurpose bayonet circular connectors, completely covered with fire-resistant rubber.

Applications

- Power connections
- Signal connections
- Intervehicle applications

VEAM FRCIR-WCML Series

Multipole connector with group shielding contact for several cables. IP67, waterproof.

Applications

- Intervehicle connections
- Power and signal connections

VEAM FRCIR for databus and power

FRCIR for databus and power applications.

Applications

- Intervehicle applications
- Databus applications

VEAM FRCIR/VBN connector series with grounding system

Grounding system to ground the connector shell.

Applications

- Air conditioning
- Lighting
- Converters

Optical Products

Multi-channel Fiber Optic Connectors

Typical applications in automation and control systems.

Applications

- Intervehicle applications
- CCTV equipment
- Entertainment

VEAM PCB Optical Connections

PCB version optical connection system according to DIN41612 STYLE E, 16 channels. Active contacts are removable for quick and easy repair.

Applications

- Power conversion control panel

Specifications and dimensions subject to change
Dimensions shown in mm.

Rack and Panel

Cannon Trident Multiway

The Multiway range is an extremely reliable and robust series of rack and panel connectors. The design is based on the requirements of MIL-C-28748 and will accept any of the Trident signal or coax contacts. It is available in 6 arrangements ranging from 14 to 75 ways, together with a wide range of accessories and mounting hardware.

Applications

- Trackside signalling
- Test equipment

VEAM Rack and Panel connector

Push pull connector for power and signal applications. Typical applications in power conversion panels.

Applications

- Power conversion
- Power connections

Junction Boxes

Junction Box

Junction box with CIR Connectors.

Applications

- Controls
- Tilting systems
- CCTV equipment

Junction Boxes for Optical Connections

Applications

- Controls
- Tilting systems
- CCTV equipment

Signal Connectors

VEAM FRCIR M12

4 ethernet lines connector M12 type for harsh applications used in signal networks.

Applications

- Intervehicle connections
- Databus applications

VEAM FRCIR for MVB lines

FRCIR for MVB databus with shielding.

Applications

- Intervehicle connections
- Databus applications

VEAM FRCIR RJ45

FRCIR with 2 RJ45 connector for ethernet applications.

Applications

- Intervehicle connections
- Databus applications

VEAM D Sub WCML Series Backshell

Backshell to connect the shield in D Sub series.

Applications

- Internal signal lines
- Databus applications

Cannon Combo D Sub

Combo D, D*M connector series offers the advantages of an industry standard shield I/O interconnect, with the flexibility of a customized special, designed for any application.

Applications

- Control systems
- Trackside signalling
- Communications equipment

Hermetic Connector

High performance through-wall hermetic connector (vacuum: 6x10 x –3 bar Max. Ermeticity: <10 x-7 m bar l/sec. temperature range: -40°C +90° C)

Applications

- GTO Control
- Power Conversion

Power Connectors

VEAM FRCIR 290

Circular bayonet connector for both power and data connections. IP67, waterproof.

Applications

- Intervehicle power connections
- Motor supply

VEAM VPLABB Series

Single pole power connector up to 660A for traction applications.

Applications

- High current connections
- Power conversion

Introducing the most versatile

multipin connector in the world...

The **VEAM CIR Series** is the most versatile electrical, optical and pneumatic multipin connector available today. Designed originally for the hostile environment of Transit applications, CIR has earned acceptance in Military, Commercial, Medical, Geophysical, Entertainment, Nuclear, Aerospace. Ground support and comparable areas requiring nearly non-destructible cable or wire terminations.

The electrical design parameters of CIR were based on MIL-DTL-5015. However, its unique positive lock, quick disconnect coupling surpasses the environmental requirements of this military specification. To enhance service life, CIR connectors feature stainless steel anti-wear rings at the critical point of the receptacle coupling ramps. The CIR design has been adopted by NATO as the "standard connector for Ground Fighting Vehicles" and is used extensively in U.S. and European military programs: Based on standard VG 95234.

COAXIAL CIR
Coaxial contacts for CIR arrangements accept most popular RG cables.

FIBEROPTIC CIR
CIR connectors are available with single or multiple fiber termini.

FUEL RESISTANT CIR
CIR inserts/grommets can be molded in Fluoroelastomer (Viton*) for superior resistance to fuel oils, solvents and elevated temperatures.

HERMETIC CIR
CIR connectors can be supplied with glass to metal seals in lieu of elastomeric inserts. A wide choice of wire terminations are available.

HIGH VOLTAGE
High Voltage CIR connectors are available. For voltage ratings consult factory.

TWINAXIAL, TRIAXIAL CIR
Size 4 or 8 contact cavities will accept these versatile contacts.

RFI/EMI CIR
Unique grounding fingers on plug connectors provide superior plug to receptacle (360º) shield integrity.

THERMOCOUPLE CIR
CIR connectors are available with various thermocouple material contacts including; chromel, alumel, copper, constantan and iron.

PNEUMATIC CIR
Various insert arrangements with size 4, 8, or 12 cavities will accept pneumatic contacts to pass liquid or air - at pressures up to 110 PSI. Flow valves available.

FILTERED CIR
Available with Tubular or Planar filter networks.

*Trademark-DuPont

1. Quick coupling and uncoupling 120º coupling nut rotation.

2. High shock **50 g's** and vibration resistance **20 g's** - Lockwires not required.

3. No coupling threads to gall or bind due to wear or contamination

4. Audible, Visual, and Tactile indication of full coupling.

5. **Waterproof to 10 meters** (33 ft.) 12 Hours (14.7 PSI)

6. **2,000 couplings min.**

7. Elastomer temperature ranges:
   - 55º C. to + 125º C. Neoprene
   - 55º C. to + 200º C. Silicone
   - 25º C. to + 200º C. Viton*
   - 40º C. to + 125º C. FR (flame retardant)

General Specifications

Shell	**Material:** Aluminum alloy. Options include stainless steel, bronze and plastic composite.
	Finish: Hard Black Anodize (T89), Non-cadmium (Green-T100), (Black-T108) Electroless Nickel (T29), Cadmium-olive drab (T3), Epoxyurethane Varnish (T39).
	For other materials and finishes, consult our Customer Service Department.
Insert	**Material:** Polychloroprene (Neoprene). Options include silicone, fluorocarbon (Viton*) and FR (Flame Retardant) rubber.
Contacts	**Material:** Copper alloy or thermocouple alloys.
	Finish: Silver (T9), gold (standard - T12, heavy -T112) and Rhodium plating.
VEAM CIR Series Connectors are produced in accordance with NATO Standard VG95234, which is based on MIL-DTL-5015 for physical size, layout and environmental requirements.	
** Trademark-Dupont*	

Note: CIR connectors are available with cadmium free and lead free materials.

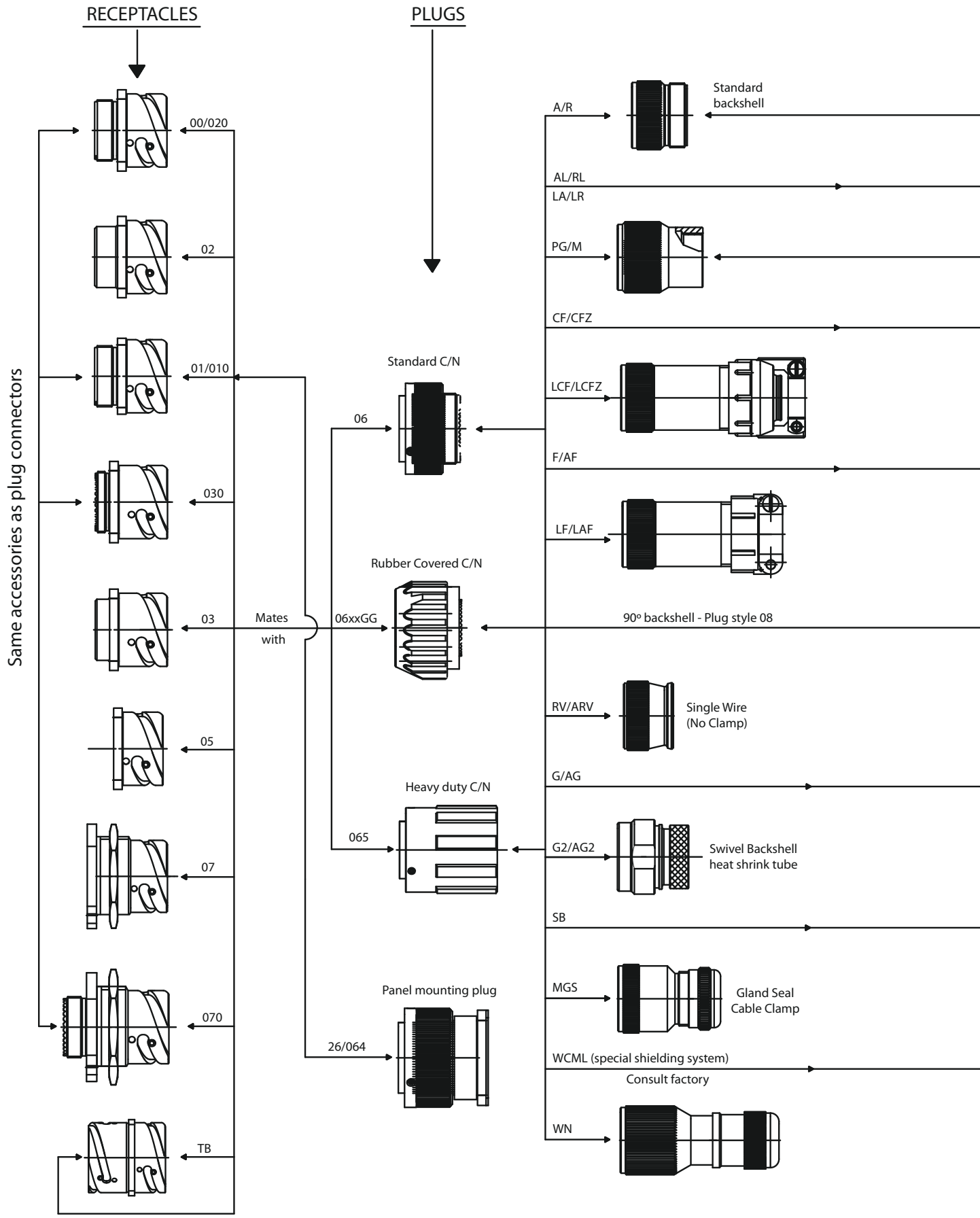
RECEPTACLES
PLUGS
Same accessories as plug connectors
00/020
02
01/010
030
03
05
07
070
TB
Mates
with
Standard C/N
06
Rubber Covered C/N
06xxGG
Heavy duty C/N
065
Panel mounting plug
26/064
A/R
Standard
backshell
AL/RL
LA/LR
PG/M
CF/CFZ
LCF/LCFZ
F/AF
LF/LAF
90º backshell - Plug style 08
RV/ARV
Single Wire
(No Clamp)
G/AG
G2/AG2
Swivel Backshell
heat shrink tube
SB
MGS
Gland Seal
Cable Clamp
WCML (special shielding system)
Consult factory
WN

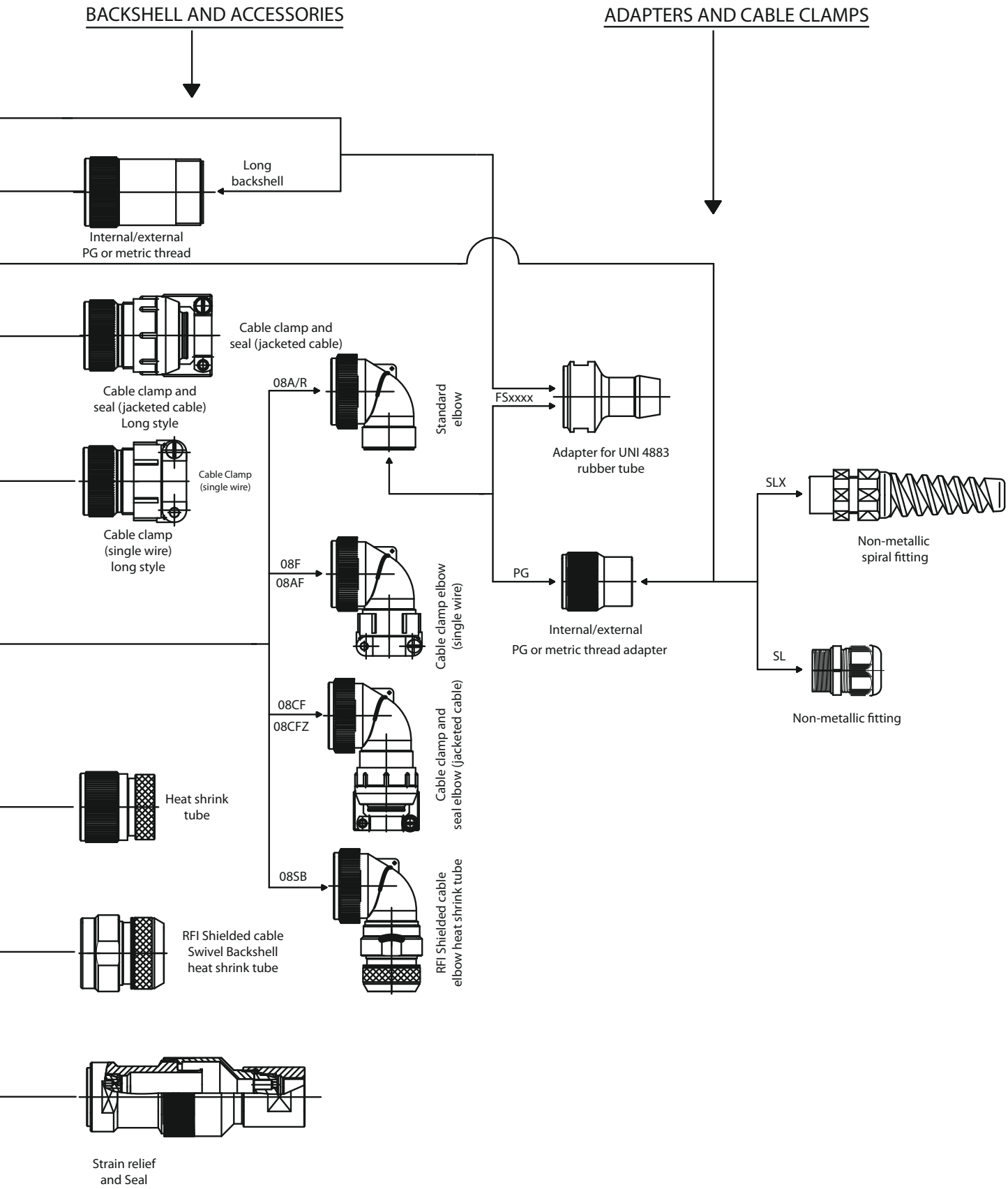

Specifications and dimensions subject to change
Dimensions shown in mm.

Standard Part Number Generation - Line Configurator

FR CIR G 030 RV 18 19 P W – F80 – TXXX–YYY

- Prefix
- Connector series
- Alternate material
- Shell Style
- Environmental Class
- Shell Size
- Insert Arrangement
- Contact Gender
- Alternate Insert Rotations
- Contact Type
- Plating Code
- Modifications

PREFIX
FR.....Flame retardant materials

CONNECTOR SERIES
CIR....Bayonet coupling

ALTERNATE MATERIAL
G.....Plug with RFI grounding
V.....Fluoroelastomers
P.....Plastic connector shells
SP..... Plastic receptacle shell without ramp rings

SHELL STYLE
01/010.....In-line receptacle-Round flange with flats
020/00.....Front panel mount receptacle, rear thread
02.....Front panel mount receptacle, no rear thread
03.....Rear panel mount receptacle, no rear thread
030.....Rear panel mount receptacle, rear thread
038.....Rear/Front mount receptacle with 90° backshells
05.....Dummy receptacle
07.....Single hole mount jamnut receptacle, no read thread
070.....Single hole mount jamnut receptacle, read thread
078.....Single hole mount jamnut receptacle with 90° backshells
TB.....Thru-bulkhead receptacle
06.....Straight plug connector
065.....Straight plug connector with heavy duty coupling nut
26/064PP....Panel plug
08.....90 degree plug connector

ENVIRONMENTAL CLASS
Different classes are based on the type of backshell, sealing capability and accessories. Refer to pages 53 - 63.

SHELL SIZE
10SL, 14S, 16S, 16, 18, 20, 22, 24, 28, 32, 36, 40

INSERT ARRANGEMENT
Defined by the quantity and size of the contacts.
For the layouts refer to pages 37-50
For the service rating and other electrical data refer to page 12

CONTACT GENDER
P.....Male contacts
S.....Female contacts
PS.....Thru-bulkhead contacts (female-male)
PP - Thru-bulkhead contacts (male-male)

ALTERNATE INSERT POSITION
W, X, Y, Z, Q - Refer to page 23

CONTACT TYPE
F80.....Crimp for AWG wire (used in F80 insert)
CR.....Crimp for metric wire (used in metric insert)
CR1.....Crimp for AWG wire (used in metric insert)
PC.....Pneumatic contacts
VO.....Contacts not supplied
NO SUFFIX.....Solder (standard class)

PLATING CODE OF SHELLS
T29.....Electroless Nickel
T39.....Black epoxyurhetanic varnish
T89.....Black hard anodize
T100.....Zinc/cobalt Ecogreen
T108.....Zinc/cobalt Ecoblack
Other plating available. Please consult the factory.

MODIFICATIONS
VO.....Supplied less contacts
Consult factory

Connector and Contact Ratings

Insert Arrangement Service Rating

Service Rating	Operating Voltage DC (at sea level)	Operating Voltage AC (at sea level)
I	250 V	200 V
A	700 V	500 V
D	1250 V	900 V
E	1750 V	1250 V
B	2450 V	1750 V
C	4200 V	3000 V

Contact Rating

Contact Size		Maximum Current	Rated and Test Current	Potential Drop Millivolts Maximum
F80-CR1	CR	•		*
20	10	7.5 A	7.5 A	83 mV
18	-	10 A	7.5 A	83 mV
16-16S	15-15S	22 A	13 A	74 mV
12	25	41 A	23 A	63 mV
8	60-100	73 A	46 A	65 mV
4	160	135 A	80 A	58 mV
0	500	245 A	150 A	53 mV
4/0		350 A	225 A	53 mV

• Applicable for short time
** According to MIL-C-39029 D. Test with nickel-plated wire.*

Dielectric Strength (Standard at Sea Level Conditions)

Service Rating	Minimum Flashover ac rms	Test Voltage ac rms *
I	1.400 V	1.000 V
A	2.800 V	2.000 V
D	3.600 V	2.800 V
E	4.500 V	3.500 V
B	5.700 V	4.500 V
C	8.500 V	7.000 V

** According to MIL-DTL-5015 the connectors do not show any signs of breakdown when the test voltage indicated in the table is applied for one minute between the two closet contacts and between the shell and any of the contacts to the shells*

Shielding Characteristics

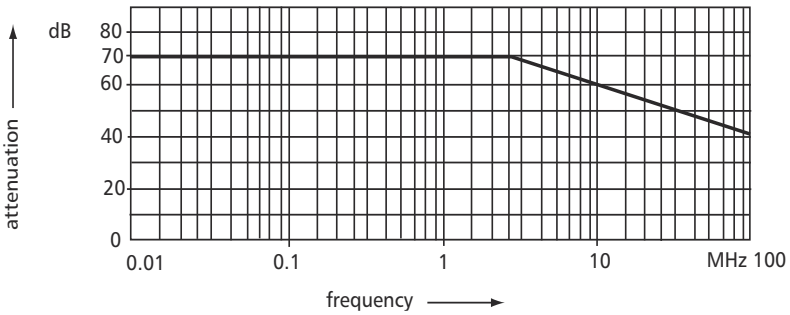

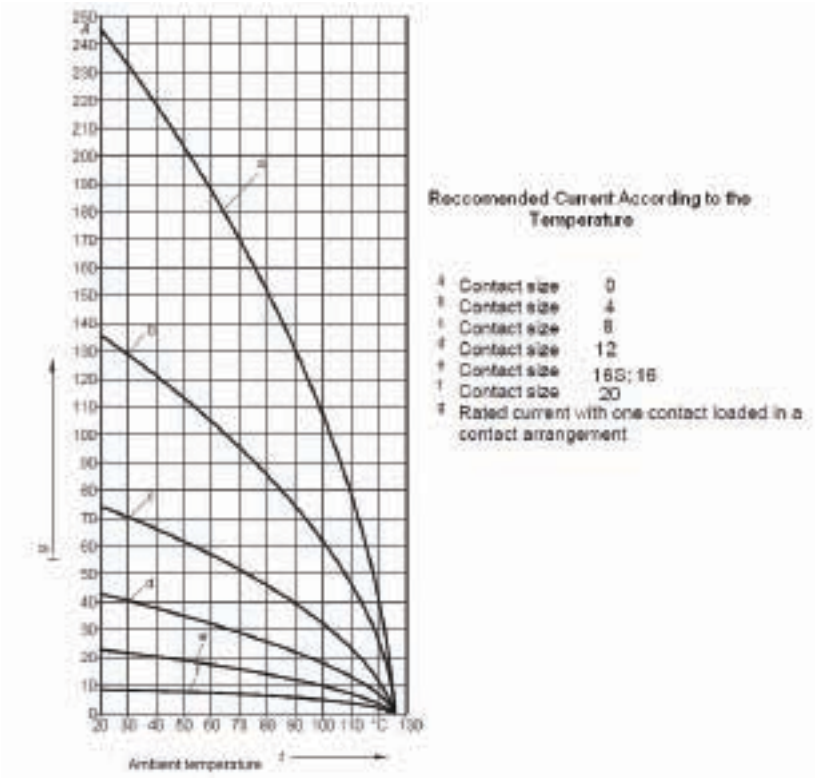

Backshell / Clamp Torque Forces

Recommended Torque Forces Connector Backshells/Clamps			
Size	In. lb Min/Max	Size	In. lb Min/Max
10SL	26/31	22	87/104
14S	44/49	24	96/130
16	57/66	28	121/165
16S	57/66	32	130/182
18	61/69	36	165/235
20	69/87	40	182/347

Contact Disengaging Force Meets or Exceeds MIL-C-39029

Contact Size F80	Ounces	Newtons
18-20	.7	.19
16-16S	2.0	.56
12	3.0	.83
8	5.0	1.39
4	10.0	2.78
0	15.0	4.17
4/0*	15.0	4.17

**Not included in MIL-Spec*

Contact Size		Min. Disengaging Force
CR	CR1 and F80	N (Newton)
10	20	0,3
15-15S	16-16S	1
25	12	1,5
60-100	8	3
160	4	4
500	0	8,5

Separating force per contact
The corresponding separating force has to be measured according to VG95319, part 2, test no. 5.7 using the required test gauge.

CIR Coupling - Torque Values per VG95234

The allowable coupling torques have to be tested under full bundle conditions of the connectors to VG95319, part 2 test no. 5.8.2

Shell Size	Allowable coupling torque closing and opening Nm max.	Opening Nm min.
10SL	1,7	0,15
14S	3,6	0,35
16S	5,5	0,46
16	5,5	0,46
18	8	0,58
20	9	0,7
22	11	0,8
24	14	0,8
28	17	0,92
32	19	1,03
36	23	1,03
40 *	24	1,5

* Size *40* it is not required from *VG 95234*

Pin Contact Part Number	Socket Contact Part Number	Contact Size	Wire Size (AWG or mm²)	Approximate Wire Diameter mm	Approximate Wire Diameter inch	Crimp Bucket I.D mm	Crimp Bucket I.D inch
46730-20P	46731	20	20-26	0.96-1.02	.038 -.040	1.3	.051
46740P	46740S	18	18-20	1.16-1.27	.046-.050	1.3	.051
46740-15P	46740-15S	18	20-22	0.76-1.02	.030-.040	1.2	.047
46740-22P	46740-22S	18	16	1.45-1.52	.057-.060	1.7	.067
27911	27961	16S	16-18	1.45-1.52	.057-.060	1.7	.067
27911-13	27961-13	16S	20-24	0.61-1.02	.024-.040	1.3	.051
27911-15	27961-15	16S	18-20	0.96-1.27	.038-.050	1.5	.059
27911-20	27961-20	16S	14-16	1.45-1.9	.057-.075	2.0	.079
27911-26	27961-26	16S	12-14	2.18	.086	2.5	.098
27913	27963	16	16-18	1.45-1.52	.057-.060	1.7	.067
27913-08	27963-08	16	24-26	0.61-0.63	.024-.025	0.85	.033
27913-12	27963-12	16	20-22	0.76-1.02	.030-.040	1.2	.047
27913-13	27963-13	16	20-24	0.61-1.02	.024-.040	1.3	.051
27913-15	27963-15	16	18-20	0.96-1.27	.038-.050	1.5	.059
27913-20	27963-20	16	14-16	1.45-1.9	.057-.075	2.0	.079
27913-26	27963-26	16	12-14	2.18	.086	2.5	.098
27914-8	27964-8	12	8	3.5-4.37	.138-.172	4.55	.179
27914-12	27964-12	12	20-22	0.76-1.02	.030-.040	1.2	.047
27914-20	27964-20	12	14-18	1.16-1.9	.046-.075	2.0	.079
27914-22	27964-22	12	2.5mm²	1.78	.070	2.2	.087
27914-26	27964-26	12	12-14	2.18	.086	2.5	.098
27914-30	27964-30	12	4mm²	2.26	.089	3.0	.118
27914-38	27964-38	12	10	3.2	.126	3.6	.142
27915	27935	8	8	3.5-4.37	.138-.172	4.55	.179
27915-20	27935-20	8	14-18	1.16-1.9	.046-.075	2.0	.079
27915-26	27935-26	8	12-14	2.18	.086	2.5	.098
27915-26-62	27935-26-62	8	12-14	2.18	.086	2.5	.098
27915-30	27935-30	8	4mm²	2.26	.089	3.0	.118
27915-38	27935-38	8	10	3.2	.126	3.6	.142
27915-58	27935-58	8	6	4.83-5.41	.190-.213	5.8	.228

Pin Contact Part Number	Socket Contact Part Number	Contact Size	Wire Size (AWG or mm²)	Approximate Wire Diameter		Crimp Bucket I.D	
				mm	inch	mm	inch
27916	27936	4	4	4.83-6.86	.190-.270	7.2	.283
27916-22	27936-22	4	2.5mm²	1.78	.070	2.2	.087
27916-62	27936-62	4	16mm²	5.76-6.02	.227-.237	6.2	.244
27917	27937	0	53mm²	10.5-11	.413-.433	11.5	.453
27917V	27937V	0	0 (1/0)	10.5-11	.413-.433	11.5	.453
27917-45	27937-45	0	8	3.5-4.37	.138-.172	4.55	.179
27917-50	27937-50	0	10mm²	4.16-4.86	.164-.191	5.0	.197
27917-62	27937-62	0	16mm²	6-6.17	.236-.243	6.2	.244
27917-78	27937-78	0	25mm²	7.48	.294	7.8	.307
27917-90	27937-90	0	35mm²	8.76	.345	9.0	.354
27917-107	27937-107	0	50mm²	10.57	.416	10.7	.421
46646-0	47647-0	0	4	6.6-6.86	.260-.270	7.2	.283
47107-90	47114-90	4/0	2	8.13-8.53	.320-.336	9.0	.354
47107-115	47114-115	4/0	1/0 (0)	10.5-11	.413-.433	11.5	.453
47107-135	47114-135	4/0	2/0	11.0-12.9	.433-.508	13.5	.531
47107-144	47114-144	4/0	70mm²	12.48	.491	14.4	.567
47107-155	47114-155	4/0	95mm²	14.6	.575	15.5	.610
47107-165	47114-165	4/0	4/0	14.7-15.0	.579-.591	16.5	.650

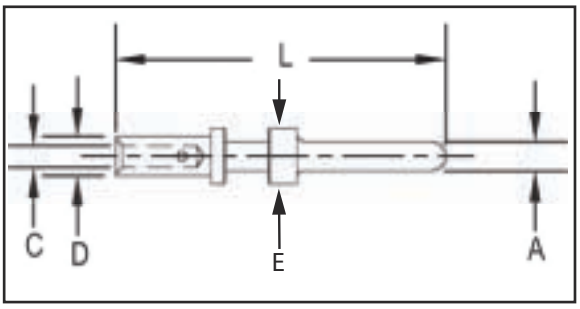

Male
(Pin)

*When ordering add suffix: T9 for Silver • T12 for Gold - For other platings, consult our Customer Service Department.

VEAM Part Number*	Contact Size	Wire Size (AWG)	Wire Size mm²	A		C		D		E		L	
				mm	inch	mm	inch	mm	inch	mm	inch	mm	inch
46730-20P	20	20-26	0,15 / 0,6	1.0	.04	1.3	.05	1.93	.07	2.0	.08	27.0	1.06
46730-20P-1	20S	20-26	0,15 / 0,6	1.0	.04	1.3	.05	1.93	.07	2.0	.08	22.8	.9
46740P	18	18	0,15 / 0,6	1.42	.05	1.3	.05	1.93	.07	2.2	.086	29.6	1.17
46740-15P	18	20-22	0,3 / 0,6	1.42	.05	1.2	.05	1.93	.07	2.2	.086	29.6	1.17
46740-22P	18	16-18	1 / 1,5	1.42	.05	1.7	.07	2.6	.10	2.6	.10	31.75	1.25
27911	16S	16-18	1 / 1,5	1.58	.06	1.7	.07	2.6	.10	3.2	.13	26.6	1.05
27911-12	16S	-	0,15 / 0,75	1.58	.06	1.2	.05	2.6	.10	3.2	.13	26.6	1.05
27911-13	16S	20-26	0,15 / 0,6	1.58	.06	1.3	.05	1.93	.07	3.2	.13	26.6	1.05
27911-15	16S	18	1	1.58	.06	1.5	.06	2.6	.10	3.2	.13	26.6	1.05
27911-20	16S	14-16	2	1.58	.06	2.0	.08	2.9	.11	3.2	.13	26.6	1.05
27911-22	16S	-	2,5	1.58	.06	2.2	.09	3.8	.15	3.2	.13	26.6	1.05
27911-26	16S	12-14	3	1.58	.06	2.5	.10	3.8	.15	3.2	.13	26.6	1.05
27913	16	16-18	1 / 1,5	1.58	.06	1.7	.07	2.6	.10	3.2	.13	31.75	1.25
27913-08	16	24-26	0,15 / 0,2	1.58	.06	.85	.03	1.55	.06	3.2	.13	31.75	1.25
27913-12	16	—	0,15 / 0,75	1.58	.06	1.2	.05	2.6	.10	3.2	.13	31.75	1.25
27913-13	16	20-26	0,15 / 0,6	1.58	.06	1.3	.05	1.93	.07	3.2	.13	31.75	1.25
27913-15	16	18	1	1.58	.06	1.5	.06	2.6	.10	3.2	.13	31.75	1.25
27913-20	16	14-16	2	1.58	.06	2.0	.08	2.9	.11	3.2	.13	31.75	1.25
27913-22	16	-	2,5	1.58	.06	2.2	.09	3.8	.15	3.2	.13	31.75	1.25
27913-26	16	12-14	3	1.58	.06	2.5	.10	3.8	.15	3.2	.13	31.75	1.25
27913-32	16	28-32	0,03 / 0,08	1.58	.06	0.45	.018	1.95	.07	3.2	.13	31.75	1.25
27914-8	12	8	9	2.38	.09	4.55	.18	6.8	.27	4.8	.19	42.5	1.67
27914-12	12	—	0,15 / 0,75	2.38	.09	1.2	.05	2.6	.10	4.8	.19	37.5	1.48

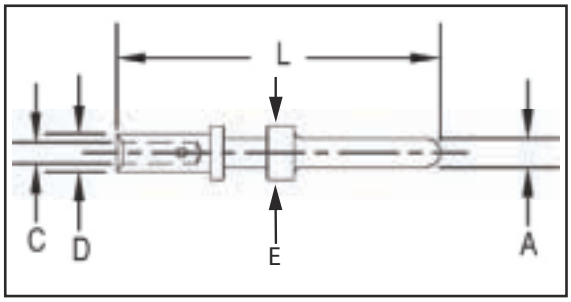

Male
(Pin)

* When ordering add suffix: T9 for Silver • T12 for Gold - For other platings, consult our Customer Service Department.

VEAM Part Number*	Contact Size	Wire Size (AWG)	Wire Size mm^2	A		C		D		E		L	
				mm	inch	mm	inch	mm	inch	mm	inch	mm	inch
27914-20	12	14-18	1 / 2	2.38	.09	2.0	.08	3.8	.15	4.8	.19	37.5	1.48
27914-22	12		2,5	2.38	.09	2.2	.09	3.8	.15	4.8	.19	37.5	1.48
27914-26	12	12-14	3	2.38	.09	2.5	.10	3.8	.15	4.8	.19	37.5	1.48
27914-30	12	—	4	2.38	.09	3.0	.12	4.8	.19	4.8	.19	37.5	1.48
27914-30M	12	—	4	2.38	.09	3.3	.13	4.2	.165	4.8	.19	37.5	1.48
27914-38	12	—	5	2.38	.09	3.6	.14	4.8	.19	4.8	.19	37.5	1.48
27915	8	—	9	3.6	.14	4.5	.18	6.8	.27	7.8	.31	40.7	1.60
27915-20	8	14-18	1 / 2	3.6	.14	2.0	.08	3.8	.15	7.8	.31	40.7	1.60
27915-26	8	12	3	3.6	.14	2.5	.10	3.8	.15	7.8	.31	40.7	1.60
27915-26-62	8	12-14	2 / 3	3.6	.14	2.5	.10	6.2	.24	7.8	.31	40.7	1.60
27915-30	8	—	4	3.6	.14	3.0	.12	4.8	.19	7.8	.31	40.7	1.60
27915-38	8	—	6	3.6	.14	3.6	.14	4.8	.19	7.8	.31	40.7	1.60
27915-50	8	—	10	3.6	.14	5.0	.19	7.0	.28	7.8	.31	40.7	1.60
27915-58	8	6	13,2	3.6	.14	5.8	.23	7.8	.31	7.8	.31	40.7	1.60
27916	4	4	21	5.7	.22	7.2	.28	9.5	.37	11.0	.43	41.25	1.62
27916-22	4	—	2,5	5.7	.22	2.2	.09	3.8	.15	11.0	.43	41.25	1.62
27916-26	4	12	3	5.7	.22	2.5	.10	3.8	.15	11.0	.43	41.25	1.62
27916-30	4	—	4	5.7	.22	3.0	.12	4.8	.19	11.0	.43	41.25	1.62
27916-38	4	—	6	5.7	.22	3.6	.14	4.8	.19	11.0	.43	44.25	1.74
27916-50	4	—	10	5.7	.22	5.0	.19	7.0	.28	11.0	.43	41.25	1.62
27916-62	4	—	16	5.7	.22	6.2	.24	9.5	.37	11.0	.43	41.25	1.62
27916-78	4	—	25	5.7	.22	7.8	.31	9.5	.37	11.0	.43	41.25	1.62
27916-90	4	—	35	5.7	.22	9.0	.35	12.0	.47	11.0	.43	47	1.85
27917V	0	1/0 (0)	53	9.06	.36	11.5	.45	14.4	.56	15.0	.59	46.5	1.83

Specifications and dimensions subject to change
Dimensions shown in mm.

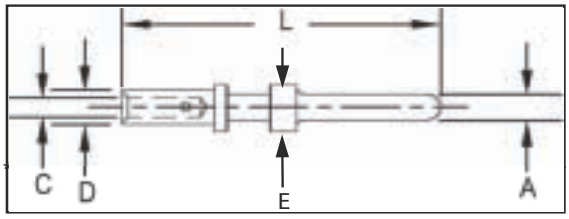

Male
(Pin)

*When ordering add suffix: T9 for Silver • T12 for Gold - For other platings, consult our Customer Service Department.

VEAM Part Number*	Contact Size	Wire Size (AWG)	Wire Size mm²	A		C		D		E		L	
				mm	inch	mm	inch	mm	inch	mm	inch	mm	inch
27917	0	0	53	9.06	.36	11.5	.45	14.4	.56	15.0	.59	44.5	1.75
27917-45	0	8	9	9.06	.36	4.5	.18	6.8	.27	15.0	.59	44.5	1.75
27917-50	0	-	10	9.06	.36	5.0	.19	7.0	.28	15.0	.59	44.5	1.75
27917-62	0	-	16	9.06	.36	6.2	.24	9.5	.37	15.0	.59	44.5	1.75
27917-78	0	-	25	9.06	.36	7.8	.31	9.5	.37	15.0	.59	44.5	1.75
27917-90	0	-	35	9.06	.36	9.0	.35	14.4	.56	15.0	.59	44.5	1.75
27917-107	0	-	50	9.06	.36	10.7	.42	14.4	.56	15.0	.59	44.5	1.75
46646-0	0	4	21	9.06	.36	7.2	.28	9.5	.37	15.0	.59	47.5	1.87
47107-78	4/0	-	25	12.7	.50	7.8	.31	9.5	.37	20.0	.79	58.0	2.28
47107-90*	4/0	2	33,5	12.7	.50	9.0	.35	14.4	.56	20.0	.79	58.0	2.28
47107-107	4/0	-	50	12.7	.50	10.7	.42	14.4	.56	20.0	.71	56.3	7.22
47107-115	4/0	1/0 (0)	53	12.7	.50	11.5	.45	14.4	.56	20.0	.79	56.3	2.22
47107-135	4/0	2/0	67,4	12.7	.50	13.5	.53	16.5	.65	20.0	.79	58.0	2.28
47107-144*	4/0	-	70	12.7	.50	14.4	.57	20.0	.79	20.0	.79	63.0	2.48
47107-155	4/0	-	95	12.7	.50	15.5	.61	20.0	.79	20.0	.79	63.0	2.48
47107-165	4/0	4/0	107	12.7	.50	16.5	.65	20.0	.79	20.0	.79	63.0	2.48
47107-180	4/0	-	120	12.7	.50	18	.71	23.0	.91	20.0	.79	62.5	2.46

*Contact Customer Service Department if used with inserts 32A-1 or 36A-1.

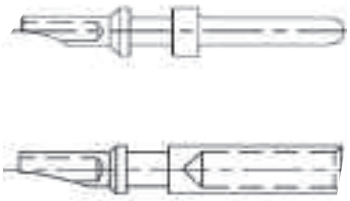

Contact Part Numbers - Solder

Contact Type	Wire Size Max	Solder Male (Pin)	Solder Female (Socket)
20	20	44242	44244
18	18	13342	13341
16S	16	27901	27951
16	16	27903	27953
12	12	27904	27954
8	8	27905	27925M
4	4	27906	27926
0	0 (1/0)	27907	27927

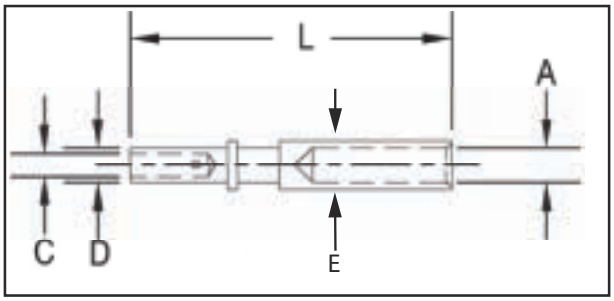

Female
(Socket)

* When ordering add suffix: T9 for Silver • T12 for Gold - For other platings, consult our Customer Service Department.

VEAM Part Number*	Contact Size	Wire Size (AWG)	Wire Size mm²	A		C		D		E		L	
				mm	inch	mm	inch	mm	inch	mm	inch	mm	inch
46731	20	20-26	0,15 / 0,6	1.08	.04	1.3	.05	1.93	.07	2.4	.09	36.5	1.44
46731-1	20	20-26	0,15 / 0,6	1.08	.04	1.3	.05	1.93	.07	2.4	.09	26.3	1.03
46740S	18	20-26	0,15 / 0,6	1.46	.05	1.3	.05	1.93	.07	3.2	.13	34.4	1.35
46740-15S	18	20-22	0,3 / 0,6	1.46	.05	1.2	.05	1.93	.07	2.4	.09	34.4	1.35
46740-22S	18	16-18	1 / 1,5	1.46	.05	1.7	.07	2.6	.10	2.6	.10	36.5	1.44
27961	16S	16-18	1 / 1,5	1.65	.06	1.7	.07	2.6	.10	3.2	.13	26.6	1.05
27961-12	16S	—	0,5 / 0,75	1.65	.06	1.2	.05	2.6	.10	3.2	.13	26.6	1.05
27961-13	16S	20-26	0,15 / 0,6	1.65	.06	1.3	.05	1.93	.07	3.2	.13	26.6	1.05
27961-15	16S	18	1	1.65	.06	1.5	.06	2.6	.10	3.2	.13	26.6	1.05
27961-20	16S	14-16	2	1.65	.06	2.0	.08	2.9	.11	3.2	.13	26.6	1.05
27961-22	16S	—	2,5	1.65	.06	2.2	.09	3.8	.15	3.2	.13	26.6	1.05
27961-26	16S	12-14	3	1.65	.06	2.5	.10	3.8	.15	3.2	.13	26.6	1.05
27963	16	16-18	1 / 1,5	1.65	.06	1.7	.07	2.6	.10	3.2	.13	36.5	1.44
27963-08	16	24-26	0,15 / 0,2	1.65	.06	0.85	.03	1.55	.06	2.4	.09	36.5	1.44
27963-12	16	—	0,15 / 0,75	1.65	.06	1.2	.05	2.6	.10	3.2	.13	36.5	1.44
27963-13	16	20-26	0,15 / 0,6	1.65	.06	1.3	.05	1.93	.07	3.2	.13	36.5	1.44
27963-15	16	18	1	1.65	.06	1.5	.06	2.6	.10	3.2	.13	36.5	1.44
27963-20	16	14-16	2	1.65	.06	2.0	.08	2.9	.11	3.2	.13	36.5	1.44
27963-22	16	—	2,5	1.65	.06	2.2	.09	3.8	.15	3.2	.13	36.5	1.44
27963-26	16	12-14	3	1.65	.06	2.5	.10	3.8	.15	3.2	.13	36.5	1.44
27963-32	16	28-32	0,03 / 0,08	1.65	.06	0.45	.018	1.95	.07	3.2	.13	36.5	1.44
27964-8	12	8	9	2.48	.10	4.55	.18	6.8	.27	4.8	.19	42.5	1.67
27964-12	12	—	0,15 / 0,75	2.48	.10	1.2	.05	2.6	.10	4.8	.19	37.5	1.48

Specifications and dimensions subject to change
Dimensions shown in mm.

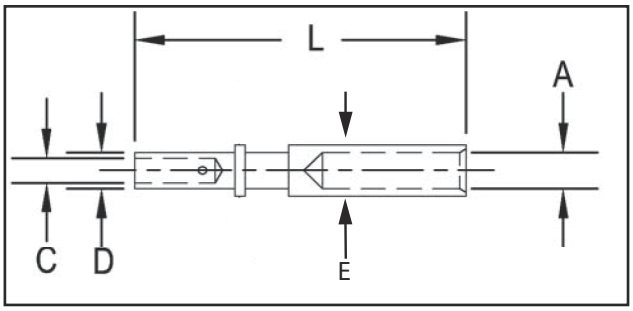

Female
(Socket)

* When ordering add suffix: T9 for Silver • T12 for Gold - For other platings, consult our Customer Service Department.

VEAM Part Number*	Contact Size	Wire Size (AWG)	Wire Size mm²	A		C		D		E		L	
				mm	inch	mm	inch	mm	inch	mm	inch	mm	inch
27964-20	12	14-16-18	1 / 2	2.48	.10	2.0	.08	3.8	.15	4.8	.19	37.5	1.48
27964-22	12	—	2,5	2.48	.10	2.2	.09	3.8	.15	4.8	.19	37.5	1.48
27964-26	12	12-14	3	2.48	.10	2.5	.10	3.8	.15	4.8	.19	37.5	1.48
27964-30	12	—	4	2.48	.10	3.0	.12	4.8	.19	4.8	.19	37.5	1.48
27964-30M	12		4	2.48	.10	3.3	.13	4.2	.165	4.8	.19	37.5	1.48
27964-38	12	—	6	2.48	.10	3.6	.14	4.8	.19	4.8	.19	37.5	1.48
27935	8	8	9	3.7	.15	4.5	.18	6.8	.27	7.8	.31	40.7	1.60
27935-20	8	14-18	1 / 2	3.7	.15	2.0	.08	3.8	.15	7.8	.31	40.7	1.60
27935-26	8	12-14	3	3.7	.15	2.5	.10	3.8	.15	7.8	.31	40.7	1.60
27935-26-62	8	12-14	2 / 3	3.7	.15	2.5	.10	6.2	.24	7.8	.31	40.7	1.60
27935-30	8	—	8	3.7	.15	3.0	.12	4.8	.19	7.8	.31	40.7	1.60
27935-38	8	—	6	3.7	.15	3.6	.14	4.8	.19	7.8	.31	40.7	1.60
27935-50	8	—	10	3.7	.15	5.0	.19	6.8	.27	7.8	.31	40.7	1.60
27935-58	8	6	13,2	3.7	.15	5.8	.23	7.8	.31	7.8	.31	40.7	1.60
27936	4	4	21	5.8	.23	7.2	.28	9.5	.37	11.0	.43	41.2	1.62
27936-22	4	—	2,5	5.8	.23	2.2	.09	3.8	.15	11.0	.43	41.2	1.62
27936-26	4	12	3	5.8	.23	2.5	.10	3.8	.15	11.0	.43	41.2	1.62
27936-30	4	—	4	5.8	.23	3.0	.12	4.8	.19	11.0	.43	41.2	1.62
27936-38	4	—	6	5.8	.23	3.6	.14	4.8	.19	11.0	.43	44.2	1.74
27936-50	4	—	10	5.8	.23	5.0	.19	7.0	.28	11.0	.43	41.2	1.62
27936-62	4	—	16	5.8	.23	6.2	.24	9.5	.37	11.0	.43	41.2	1.62
27936-78	4	—	25	5.8	.23	7.8	.31	9.5	.37	11.0	.43	41.2	1.62
27936-90	4	—	35	5.8	.23	9.0	.35	12.0	.47	11.0	.43	47.0	1.85

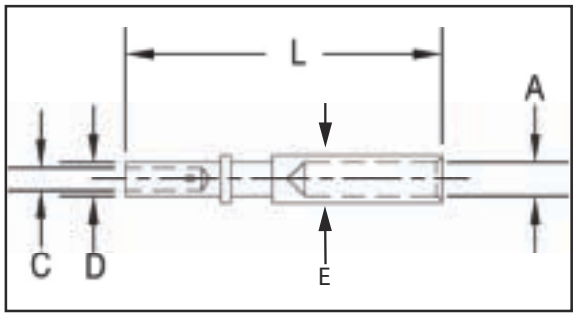

Female (Socket)

*When ordering add suffix: T9 for Silver • T12 for Gold - For other platings, consult our Customer Service Department.

VEAM Part Number*	Contact Size	Wire Size (AWG)	Wire Size mm^2	A		C		D		E		L	
				mm	inch	mm	inch	mm	inch	mm	inch	mm	inch
27937	0	0	53	9.17	.36	11.5	.45	14.4	.56	15.1	.59	44.5	1.75
27937V	0	1/0 (0)	53	9.17	.36	11.5	.45	14.4	.56	15.1	.59	46.5	1.83
27937-45	0	8	9	9.17	.36	4.5	.18	6.8	.27	15.1	.59	44.5	1.75
27937-50	0	—	10	9.17	.36	5.0	.19	7.0	.28	15.1	.59	44.5	1.75
27937-62	0	—	16	9.17	.36	6.2	.24	9.5	.37	15.1	.59	44.5	1.75
27937-78	0	—	25	9.17	.36	7.8	.31	9.5	.37	15.1	.59	44.5	1.75
27937-90	0	—	35	9.17	.36	9.0	.35	14.4	.56	15.1	.59	44.5	1.75
27937-107	0	—	50	9.17	.36	10.7	.42	14.4	.56	15.1	.59	44.5	1.75
47647-0	0	4	21	9.17	.36	7.2	.28	9.5	.37	15.1	.59	47.5	1.87
47114-78	4/0	—	25	12.7	.51	7.8	.31	9.5	.37	20.0	.79	60.9	2.40
47114-90	4/0	2	33,5	12.7	.51	9.0	.35	14.4	.56	20.0	.79	60.9	2.40
47114-115	4/0	1/0 (0)	53	12.7	.51	11.5	.45	14.4	.56	20.0	.79	59.2	2.32
47114-135	4/0	2/0	67,4	12.7	.51	13.5	.53	16.5	.65	20.0	.79	60.9	2.40
47114-144	4/0	—	70	12.7	.51	14.4	.57	20.0	.79	20.0	.79	65.9	2.59
47114-155	4/0	—	95	12.7	.51	15.5	.61	20.0	.79	20.0	.79	65.9	2.59
47114-165	4/0	4/0	107	12.7	.51	16.5	.65	20.0	.79	20.0	.79	65.9	2.59
47114-180	4/0	—	120	12.7	.51	18	.71	23.0	.91	20.0	.79	63.7	2.50

** Contact Customer Service Department if used with inserts 32A-1 or 36A-1.*

Male - Female Coaxial Contact used with F80 Inserts

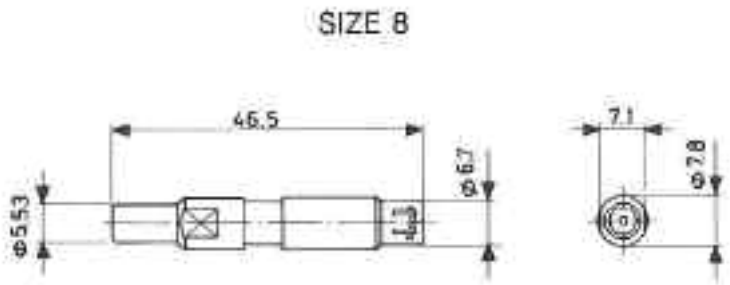

Male - female coaxial contacts can be used on the CIR-TB connectors with inserts having size “8” contact cavities. Inserts are F80 type. To be mated with all “C8” types that are independent from the cable used.
P/N - C8 - 142 PS.

Coaxial Contacts Used With F80 Inserts

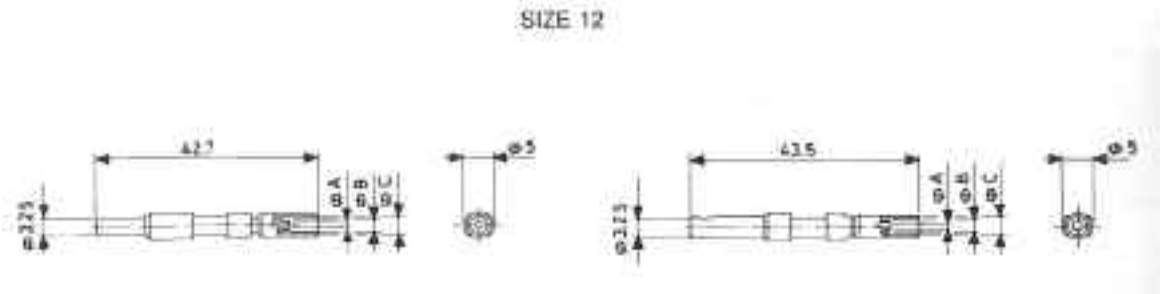

Coaxial contact in the table below are used in Size “12” contact cavities of F80 inserts. For electrical characteristics please consult factory.

Contact Type	Used with Cable	Ø A	Ø B	Ø C
C12-178P	RG 178	0,6	1,9	2,5
C12-178S	RG 178	0,6	1,9	2,5
C12-188P	RG 188/ RG174	0,6	2,25	2,9
C12-188S	RG 188/RG 174	0,6	2,25	2,9

Note: please consult the “CIR Series Assembly Guide” for assembly instructions and accessories.

Male Coaxial Contacts used with F80 Inserts

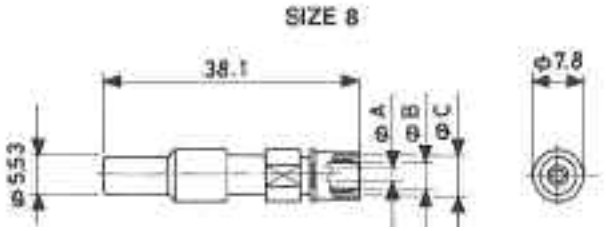

Female Coaxial Contacts used with F80 Inserts

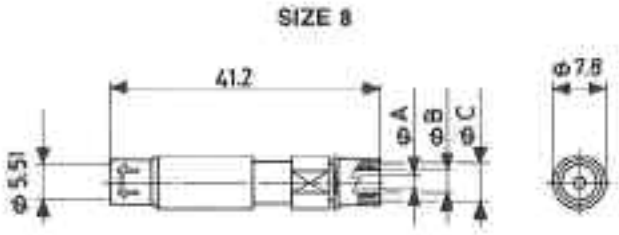

Coaxial contacts in this table are used in Size "8" contact cavities of F80 inserts. For electrical characteristics please consult the factory.

Contact Type	Used with Cable	Ø A	Ø B	Ø C
C8-058P	RG 58/RG 303	1,02	3,15	5,2
C8-062P	RG 62/RG 59	0,75	3,9	5,6
C8-142P	RG 223/RG 142/L3CFB	1,02	3,15	5,6
C8-142PM	RG 223/RG 142/L3CFB	1,02	3,15	5,6
C8-141PM	RG 141	1,02	3,15	5,25
C8-180P	RG 180	0,55	2,8	4,45
C8-178P	RG 178	0,6	1	2,5
C8-179P	RG 179	0,55	1,7	3,25
C8-179HS-P	HS-K02252-D	0,55	1,7	3,25
C8-302DS-P	RG 302DS•	1,02	3,9	6,1
C8-302DS-P/AD1	G042730-G2	1,02	3,9	7,2
C8-141P	RG 141	1,02	3,15	5,25
C8-400P	RG 400	1,02	3,15	5,6
C8-062DC-P	RG 62/SPEC•	0,75	3,9	5,8
C8-174P	RG 174/RG 316	0,75	1,7	3,25
C8-180PFM	2YCCY 0,4/2,5	0,55	2,8	4,8
C8S-999P	RG 999	1,5	3,2	—
C8-212PM	5C-2VJISC3501	1,02	5	7,5

Contact Type	Used with Cable	Ø A	Ø B	Ø C
C8-058S	RG 58/RG 303	1,02	3,15	5,2
C8-062S	RG 62/RG 59	0,75	3,9	5,6
C8-142S	RG 223/RG 142/L3CFB	1,02	3,15	5,6
C8-142SM	RG 223/RG 142/L3CFB	1,02	3,15	5,6
C8-141SM	RG 141	1,02	3,15	5,25
C8-180S	RG 180	0,55	2,8	4,45
C8-178S	RG 178	0,6	1	2,5
C8-179S	RG 179	0,55	1,7	3,25
C8-179HS-S	HS-K02282	0,55	1,7	3,25
C8-302DS-S	RG 302DS•	1,02	3,9	6,1
C8-302DS-S/AD1	G042730-G2	1,02	3,9	7,2
C8-141S	RG 141	1,02	3,15	5,25
C8-400S	RG 400	1,02	3,15	5,6
C8-062DC-S	RG 62/SPEC•	0,75	3,9	5,8
C8-174S	RG 174/RG 316	0,75	1,7	3,25
C8-180SFM	RG 180	0,55	2,8	4,8
C8S-999S	RG 999	1,5	3,2	—
C8-212SM	5C-2VJISC3501	1,02	5	7,5

Note: Please consult "CIR Series Assembly Guide" for assembly instructions and accessories.
• - Double shield braided cable

Male Coaxial Contacts used with F80 Inserts

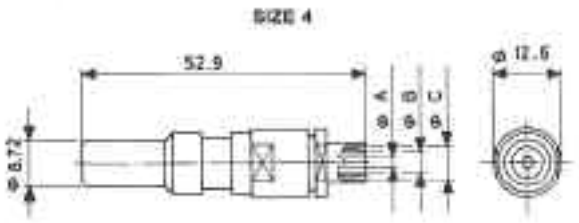

Female Coaxial Contacts used with F80 Inserts

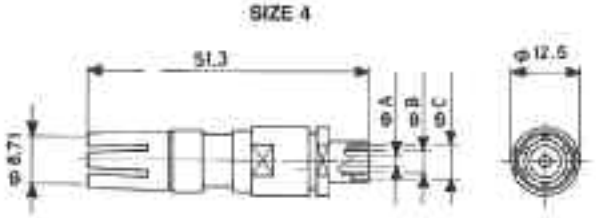

Coaxial contacts in this table are used in Size "4" contact cavities of F80 inserts. For electrical characteristics please consult the factory.

Contact Type	Used with Cable	Ø A	Ø B	Ø C
C4-006P	RG 6 5C 2VJISC 3501 22-98-02 SHR-1	1,05	4,9	7,5
C4-059P	RG 59	0,75	3,9	5,6
C4-304P	RG 304	1,06	4,9	7,5
C4-999P	RG 999	1,5	6,2	8,1

Contact Type	Used with Cable	Ø A	Ø B	Ø C
C4-006S	RG 6 5C 2VJISC 3501 22-98-02-SHR-1	1,05	4,9	7,5
C4-059S	RG 59	0,75	3,9	5,6
C4-304S	RG 304	1,6	4,9	7,5
C4-999S	RG 999	1,5	6,2	8,1

Note: Please consult "CIR Series Assembly Guide" for assembly instructions and accessories.

Male Coaxial Contacts used with F80 Inserts

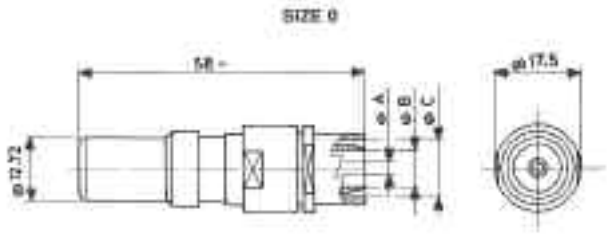

Female Coaxial Contacts used with F80 Inserts

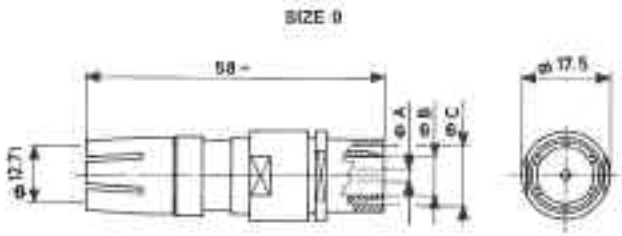

Coaxial contacts in this table are used in Size "0" contact cavities of F80 inserts. For electrical characteristics please consult the factory.

Contact Type	Used with Cable	Ø A	Ø B	Ø C
C0-008-1P ◊	RG 8	2,5	9,7	12,3
C0-008-3P	S0AM-LS0H	2,5	10,3	14,1
C0-011P/1	RG 11	1,5	7,5	11,4
C0-058P-1	VENLO H121 RG 58	1,3	3,5	5,4
C0-179P	RG 179	0,55	1,7	3,25
C0-213P	RG 213/214	2,5	7,65	11,4
C0M-H8112P*	H8112P	6,75	8,55	11

Contact Type	Used with Cable	Ø A	Ø B	Ø C
C0-008-1S ◊	RG 8	2,5	9,7	12,3
C0-008-3S	S0AM-LS0H	2,5	10,3	14,1
C0-011S/1	RG 11	1,5	7,5	11,4
C0-058S-1	VENLO H121 RG 58	1,3	3,5	5,4
C0-179S	RG 179	0,55	1,7	3,25
C0-213S	RG 213/214	2,5	7,65	11,4
C0M-058S90 ■	RG 58	See drawing below		

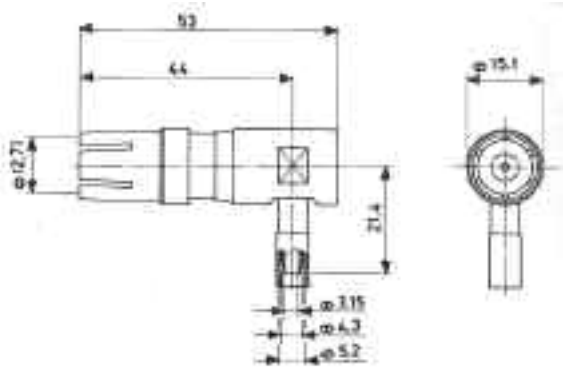

(COM-058S90)

Note: Please consult "CIR Series Assembly Guide" for assembly instructions and accessories.
** - To be mated with C0M-058S90 female contact*
■ - To be mated with C0M-H8112P male contact
◊ - Consult factory

Specifications and dimensions subject to change
Dimensions shown in mm.

Contact Quantity	Insert Arrangement	Standard Contact / Current Rating / Wire Size / MM^2								Service Rating
		20 7.5 A 20-22 AWG 0.52	18 7.5 A 18-20 AWG 0.82	16 13 A 16-18 AWG 1.3	12 23 A 12-14 AWG 3.3-2.1	8 46 A 8 AWG 8.6	4 80 A 4 AWG 21	0 150 A 0 AWG 56	4/0 225 A 4/0 AWG 107	
1	16-2				1					E
1	16-12						1			A
1	18-6						1			D
1	18-16 *				1					C
1	18-61 *						1 coax			D
1	20-2							1		D
1	22-7							1		E
1	24A-1							1		B
1	32A-1								1	B
1	36A-1 *								1	C
2	10SL-4			2						A
2	14S-9			2						A
2	16S-4			2						D
2	16-11				2					A
2	16-13 (TC)				2					A
2	18-3				2					D
2	18-14			1			1			A
2	20-23					2				A
2	22-1					2				D
2	22-8				2					E
2	22-11			2						B
2	24A-2 *				2					HV (4200 VDC)
2	24-9						2			A
2	32A-2 *			1					1	D
2	32-5							2		D
2	32D-2 *				1				1	A
2	36A-2							2		A
2	40A-2 *					1			1	D
3	10SL-3			3						A
3	10SL-55 (TC)			3						I
3	14S-1			3						A
3	14S-7			3						A
3	14S-12 (14S-1x100 °)			3						A
3	16S-5			3						A
3	16-7			2		1				A
3	16-10				3					A
3	18-5			1	2					D
3	18-22			3						D
3	20-3				3					D
3	20-19					3				A
3	22-2					3				D
3	22-6			1		2				D
3	22-9				3					E
3	22-21			2				1		A
3	28-3					3				E
3	28-6						3			D
3	28P-3 *					3				C
3	32A-3						3			B

** Note: Consult our Customer Service Department for insert arrangements.*

Contact Quantity	Insert Arrangement	Standard Contact / Current Ratings / Wire Size								Service Rating
		20 7.5 A 20-22 AWG	18 7.5 A 18-20 AWG	16 13 A 16-18 AWG	12 23 A 12 AWG	8 46 A 8 AWG	4 80 A 4 AWG	0 150 A 0 AWG	4/0 225 A 4/0 AWG	
4	14S-2			4						I
4	14S-10			4						I
4	16-9			2	2					A
4	18-4			4						D
4	18-10				4					A
4	18-13				3	1				A
4	20-4				4					D
4	20-24			2		2				A
4	22-4				2	2				A
4	22-22					4				A
4	24-22					4				D
4	32A-4 *			2				2		B
4	32-17						4			D
4	36-5							4		A
4	40D-4					4				C
5	14S-5			5						I
5	16S-8			5						A
5	18-11				5					A
5	18-20			5						A
5	18-30 (18-20x110º)			5						A
5	18-31 (18-20x260º)			5						A
5	22-12			3		2				D
5	22-34			2	3					D
5	24-12				3		2			A
5	28-5			2	1		2			D
5	28A-5GM					5				A
5	32-1				3			2		A=E; B,C,D,E=D
5	32-2			2			3			E
5	32A-5GM						5			A
5	32B-5(GM)						5			A
5	40A-3 *				2			3		E
5	40A-5GM							5		A
5	40B-5 *				1		1	3		A
6	14S-6			6						I
6	18-06 *			2	4					A
6	18-12			6						A
6	20-8			4		2				I
6	20-17			1	5					A
6	20-22			3		3				A
6	22-5			4	2					D
6	22-15			1	5					D=E; A,B,C,E,F=A
6	24-06			2		4				D
6	24A-6 *				4	2				D
6	28-22			3			3			D
6	28A-6			1		4	1			A
6	36-3				3			3		D
6	36-6						4	2		A
6	32A-6				4		2			E
6	36A-51			1			2	3		D
6	36A-61*				4		2			E

**Note:* *Consult our Customer Service Department for insert arrangements.*

Contact Quantity	Insert Arrangement	Standard Contact / Current Rating / Wire Size								Service Rating
		20 7.5 A 20-22 AWG	18 7.5 A 18-20 AWG	16 13 A 16-18 AWG	12 23 A 12-14 AWG	8 46 A 8 AWG	4 80 A 4 AWG	0 150 A 0 AWG	4/0 225 A 4/0 AWG	
6	36B-6			2	1	3				B
6	36B-61				4		2			E
6	40A-4				2			4		A
7	14SA-7 *			7						I
7	16S-1			7						A
7	18-9			5	2					I
7	18-17 (18-9x100º)			5	2					I
7	20-15				7					A
7	20A-7		7							D
7	22-28				7					A
7	24-2(GM)				7					D
7	24-10					7				A
7	24-27			7						E
7	24A-7				7					D
7	28-10				3	2	2			G=D; BAL.=A
7	28A-7			4			3			A
7	28B-7*					7				A
7	32A-7				4		3			D
7	36-77						7			D
7	40A-7 *				2			5		A
8	18-8			7	1					A
8	20-7			8						A,B,H,G=D C,D,E,F=A
8	20A-8			6		2				I
8	22-18			8						A,B,F,G,H=D C,D,E=A
8	22-23				8					H=D; BAL.=A
8	24-6 (HM)				8					A,G,H=D; BAL.=A
8	24A-8 *			8						HV (15KV)
8	32-15				6			2		D
8	32A-8					8				A
8	40A-8			4				4		E
8	40A-10			4			4			D
9	20-16			7	2					A
9	20-18			6	3					A
9	20-21			8	1					A
9	20A-9				9					J=D; BAL.=I
9	22-17			8	1					A=D; BAL.=A
9	22-27 (CR)			8		1				J=D; BAL.=A
9	22A-9			9						1,2,3=D; BAL=A
9	24-11(EM)				6	3				A
9	28-1				6	3				A,J,E=D;BAL.=A
9	28A-9			5			4			A
10	16A-10		10							A
10	18-1			10						B,C,F,G=A; BAL.=I
10	18-19			10						A
10	18-24 (18-1x250º)			10						B,C,F,G=A; BAL.=I
10	22A-10			10						A
10	22B-10*			8		2				A

**Note: Consult our Customer Service Department for insert arrangements.*

Contact Quantity	Insert Arrangement	Standard Contact / Current Rating / Wire Size / MM^2								Service Rating
		20 7.5 A 20-22 AWG 0.52	18 7.5 A 18-20 AWG 0.82	16 13 A 16-18 AWG 1.3	12 23 A 12-14 AWG 3.3	8 46 A 8 AWG 8.6	4 80 A 4 AWG 21	0 150 A 0 AWG 56	4/0 225 A 4/0 AWG 107	
10	24-21			9		1				D
10	28-19			6	4					H,M=B; A,B=D; BAL.=A
10	28A-10 *				10					D
10	32A-10 *					8	2			A
10	36A-10 *					8	2			A
10	36B-10 *					8	2			A
11	20-33			11						A
11	20A-11 *	5		5		1				A
11	24-20			9	2					D
11	24A-11			9		2				A
11	40A-11 *			6				5		A
12	24-19			12						A
12	28-9			6	6					D
12	28-18			12						M=C; G,H,J,K,L=D A,B=A; BAL.=I
12	28-51				12					D
12	36A-12					10	2			A
12	36B-12			3	3	3	3			D
13	20-11			13						I
13	20-25 (20-11x100°)			13						I
13	20-30 (20-11x250°)			13						I
13	24-013 *			7	6					A
13	32A-13				13					D
14	20-27			14						A
14	22-19			14						A
14	24A-14			12			2			I
14	28-2			12	2					D
14	28-20			4	10					A
14	28A-14				14					D
14	32-9			12			2			D
14	32A-14 *			14						HV (6000 VAC)
14	36-78			2		12				D
14	36B-78			2		12				D
14	36D-78			4		10				D
14	40A-14 *				6		8			A
15	28-17			15						R=B; M,N,P=D; BAL.=A
16	22A-16 *			16						I
16	24-5			16						A
16	24-7			14	2					A
16	24A-16 *			15		1				E
16	28A-16 *			12		4				A
16	32-68			12			4			A
17	20-29			17						A
17	28-59			10	7					A
19	20A-48			19						I
19	22-14			19						A
19	24-67				19					A
19	32-76				19					A
19	40-19				17		2			A
19	40A-19					17	2			A
19	40B-19					19				A
20	28-16			20						A
20	40A-20				18	2				D
21	40A-21				20		1			21=D; BAL.=A
22	28-11			18	4					A

**Note:* *Consult our Customer Service Department for insert arrangements.*

Contact Quantity	Insert Arrangement	Standard Contact / Current Rating / Wire Size								Service Rating
		20 7.5 A 20-22 AWG	18 7.5 A 18-20 AWG	16 13 A 16-18 AWG	12 23 A 12-14 AWG	8 46 A 8 AWG	**4** 80 A 4 AWG	0 150 A 0 AWG	4/0 225 A 4/0 AWG	
22	32A-22			20				2		A
22	32B-22 *			20			2			A
22	36A-22				22					D
23	32-6			16	2	3	2			A
23	32-13			18	5					D
23	32-16			16	2	3	2			A
24	24-28			24						I
24	40A-24				16	8				D
25	24A-25			25						I
25	32A-25				25					A
25	40A-25				24		1			A
26	28-12			26						A
26	28-13			26						A
27	32A-27			17	10					A
27	40A-27				25		2			A
28	24A-28			28						I
28	28A-63(CR)			19	9					e=A; BAL.= I
28	32A-28				28					A
29	20A-29 *		25		4					I
29	28A-29 *			27		2				A
29	40-10			16		9	4			A
29	40A-29 *			5	18	6				A
30	32-8			24	6					A
30	32A-30			20	10					A
30	40A-30				29		1			A
31	28A-31 *	25				6				I
31	32-31			31						A
31	32A-31 *			13	18					A
31	36-9			14	14	2	1			A
31	36-18 (36-9x100º)			14	14	2	1			A
31	40A-31				31					D
34	40A-34 *				33	1				I
35	28-15			35						A
35	28A-35			35						A
35	28B-35			35						A
35	32-7			28	7					A,B,h,j=I; BAL.=A
35	36-15			35						M=D; BAL.=A
35	40A-35				35					D
37	22A-37		37							A
37	28-21			37						A
37	40B-37				37					A
37	40D-37 *				37					A
38	40A-38				38					A
39	36-54			31		8				A
40	32A-40			40						A
42	32-59			40		2				A
44	36-74 *			43		1				A
47	36-7			40	7					A

* *Note: Consult our Customer Service Department for insert arrangements.*

Contact Quantity	Insert Arrangement	Standard Contact / Current Rating / Wire Size								Service Rating
		20 7.5 A 20-22 AWG	18 7.5 A 18-20 AWG	16 13 A 16-18 AWG	12 23 A 12-14 AWG	8 46 A 8 AWG	4 80 A 4 AWG	0 150 A 0 AWG	4/0 225 A 4/0 AWG	
47	36-8			46	1					A
47	36-16 (36-7x100°)			40	7					A
47	36-17 (36-7x110°)			40	7					A
47	40-9			24	22	1				A
47	40A-47			24	22	1				A
48	32A-48			48						I
48	36-10			48						A
48	36-11 (36-10x100°)			48						A
48	36-12 (36-10x110°)			48						A
48	36A-48			48						I
54	32-22			54						A
55	24A-55	55								I
55	32A-55			55						A
55	40-55 *			35	19	1				I
56	36-66			52	4					A
58	40-58 *			38	19	1				I
60	40A-60			60						A
61	32A-69 (CR)	41		20						A
61	40-63 *			61						A
62	40A-62			60		2				A
72	28-72	72								I
72	36A-72		52	16	4					I
85	40-56			85						A
85	40A-56			85						A
100	40A-100		100							A
101	32-101	101								I
130	40A-130		114	12	4					I
150	40A-150 *		150							I
159	40T-159 *	159								I

** Note: Consult our Customer Service Department for insert arrangements.*

Insert Arrangements Listed by Shell Sizes and Arrangement Numbers

Insert Arrangements	Total Contact	Contact Size 0	4	8	12	16	Service Rating
10SL-3	3					3	A
10SL-4	2					2	A
10SL-55 (TC)	3					3	I
14S-1	3					3	A
14S-2	4					4	I
14S-5	5					5	I
14S-6	6					6	I
14S-7	3					3	I
14S-9	2					2	A
14S-10(14S-2x100°)	4					4	I
14S-12(14S-1x100°)	3					3	A
14-SA-7*	7					7	I
16S-1	7					7	A
16S-4	2					2	D
16S-5	3					3	A
16S-8	5					5	A
16-2	1				1		E
16-7	3			1		2	A
16-9	4				2	2	A
16-10	3				3		A
16-11	2				2		A
16-12	1		1				A
16-13 (TC)	2				2		A
16-52 (TC)	2				2		A
16A-10	10	ALL SIZE 18					A
18-1	10					10	*
18-3	2				2		D
18-4	4					4	D
18-5	3				2	1	D
18-06	6				4	2	A
18-6	1		1				D
18-8	8				1	7	A
18-9	7				2	5	I
18-10	4				4		A
18-11	5				5		A
18-12	6					6	A
18-13	4			1	3		A
18-14	2		1			1	A
18-16	1				1		C
18-17(18-9x100°)	7				2	5	I
18-19	10					10	A
18-20	5					5	A
18-22	3					3	D
18-24(18-1x250°)	10					10	*
18-30(18-20x110°)	5					5	A
18-31(18-20x260°)	5					5	A
18-61*	1	COAX SIZE 4					D

*Note: Consult our Customer Service Department for insert arrangements
For pictorial insert arrangements refer to page 37-50.

Insert Arrangements	Total Contacts	Contact Size 0	4	8	12	16	Service Rating
20-2	1	1					D
20-3	3				3		D
20-4	4				4		D
20-7	8					8	*
20-8	6			2		4	I
20-11	13					13	I
20-15	7				7		A
20-16	9				2	7	A
20-17	6				5	1	A
20-18	9				3	6	A
20-19	3			3			A
20-21	9				1	8	A
20-22	6			3		3	A
20-23	2			2			A
20-24	4			2		2	A
20-25(20-11x100°)	13					13	I
20-27	14					14	A
20-29	17					17	A
20-30(20-11x250°)	13					13	I
20-33	11					11	A
20A-7	7	ALL SIZE 18					D
20A-8	8			2		6	I
20A-9	9				9		*
20A-11	11	5 SIZE 20		1		5	A
20A-29*	29	25 SIZE 18, 4 SIZE 12					I
20A-48	19					19	I
22-1	2			2			D
22-2	3			3			D
22-4	4			2	2		A
22-5	6				2	4	D
22-6	3			2		1	D
22-7	1	1					E
22-8	2				2		E
22-9	3				3		E
22-11	2					2	B
22-12	5			2		3	D
22-14	19					19	A
22-15	6				5	1	*
22-17	9				1	8	*
22-18	8					8	*
22-19	14					14	A
22-21	3	1				2	A
22-22	4			4			A
22-23	8				8		*
22-27	9			1		8	*
22-28	7				7		A
22-34	5				3	2	D
22A-9	9					9	A
22A-10	10					10	A
22A-16*	16					16	I
22A-37	37	ALL SIZE 18					A
22B-10*	10			2		8	A

Specifications and dimensions subject to change
Dimensions shown in mm.

Insert Arrangements Listed by Shell Sizes and Arrangement Numbers

Insert Arrangements	Total Contacts	Contact Sizes 0	4	8	12	16	Service Rating
24-2	7				7		D
24-2 (GM)	7				7		D
24-5	16					16	A
24-06	6			4		2	D
24-6	8				8		*
24-6 (HM)	8				8		*
24-7	16				2	14	A
24-9	2		2				A
24-10	7			7			A
24-11	9			3	6		A
24-11 (EM)	9			3	6		A
24-12	5		2		3		A
24-013	13				6	7	A
24-19	12					12	A
24-20	11				2	9	D
24-21	10			1		9	D
24-22	4			4			D
24-27	7					7	E
24-28	24					24	I
24-67	19				19		A
24A-1	1	1					B
24A-2* (US)	2				2		HV
24A-6 (US)	6			2	4		D
24A-7	7				7		D
24A-8*	8					8	HV
24A-11 (US)	11			2		9	A
24A-16*	16			1		15	E
24A-24*	12				12		A
24A-25	25					25	I
24A-28	28					28	I
24A-55	55	ALL SIZE 20					I
24T-2	2		1	1			D
28-1	9			3	6		*
28-2	14				2	12	D
28-3	3			3			E
28-5	5		2		1	2	D
28-6	3		3				D
28-9	12				6	6	D
28-10	7		2	2	3		*
28-11	22				4	18	A
28-12	26					26	A
28-13 (28-12X100°)	26					26	A
28-15	35					35	A
28-16	20					20	A
28-17	15					15	*
28-18	12					12	*
28-19	10				4	6	*
28-20	14				10	4	A
28-21	37					37	A
28-22	6		3			3	D
28-31*	31			6	25 SIZE 20		I
28-51	12				12		D
28-59	17				7	10	A
28-72	72	ALL SIZE 20					I

Insert Arrangement	Total Contacts	Contact Size 0	4	8	12	16	Service Rating
28A-7	7		2	1-4M		4	A
28A-9	9		4			5	A
28A-10*	10				10		D
28A-14	14				14		D
28A-16*	16			4		12	A
28A-29*	29			2		27	A
28A-31*	31			6	25 SIZE 20		I
28A-35	35					35	A
28A-63 (CR)	28				9	19	*
28B-7*	7			7			A
28B-35	35					35	A
28P-3*	3			3			C
32-1	5	2			3		*
32-2	5		3			2	E
32-5	2	2					D
32-6	23		2	3	2	16	A
32-7	35				7	28	*
32-8	30				6	24	A
32-9	14		2			12	D
32-13	23				5	18	D
32-15	8	2			6		D
32-16 (32-6x100°)	23		2	3	2	16	A
32-17	4		4				D
32-22	54					54	A
32-31	31			8		31	A
32-59	42			2		40	A
32-68	16		4			12	A
32-76	19				19		A
32-101	101	ALL SIZE 20					I
32A-1	1	SIZE 4/0					B
32A-2*	2	1 SIZE 4/0				1	D
32A-3	3		3				B
32A-5 (GM)	5		5				A
32A-6	6		2		4		E
32A-7	7		3		4		D
32A-8	8			8			A
32A-10*	10		2	8			A
32A-13	13				13		D
32A-14*	14					14	HV
32A-22	22	2				20	A
32A-25	25				25		A
32A-27	27			10		17	A
32A-28	28				28		A
32A-30	30			10		20	A
32A-31*	31				18	13	A
32A-40	40					40	A
32A-48	48					48	I
32A-55	55					55	A
32A-69 (CR)	61	20 Size 16, 41 Size 20					A
32B-5 (GM)	5		5				A
32B-22*	22		2			20	A
32D-2*	2	1 SIZE 4/0			1		A

Specifications and dimensions subject to change
Dimensions shown in mm.

Insert Arrangements Listed by Shell Sizes and Arrangement Numbers

Insert Arrangements	Total Contacts	Contact Sizes					Service Rating
		0	4	8	12	16	
36-3	6	3			3		D
36-5	4	4					A
36-6	6	2	4				A
36-7	47				7	40	A
36-8	47				1	46	A
36-9	31		1	2	14	14	A
36-10	48					48	A
36-11 (36-10X100°)	48					48	A
36-12 (36-10X250°)	48					48	A
36-15	35					35	*
36-16 (36-7X100°)	47				7	40	A
36-17 (36-7X250°)	47				7	40	A
36-18 (36-9X100°)	31		1	2	14	14	A
36-54	39			8		31	A
36-66	56				4	52	A
36-74	44			1		43	A
36-77	7		7				D
36-78 *	14			12		2	D
36A-1	1	SIZE 4/0					C
36A-2	2	2					A
36A-10	10		2	8			A
36A-12	12		2	10			A
36A-22	22				22		D
36A-48	48					48	I
36A-51	6	3	2			1	D
36A-61	6		2		4		E
36A-72	72	4 SIZE 12, 16 SIZE 16, 52 SIZE 18					I
36B-6	6			3	1	2	B
36B-10 *	10		2	8			A
36B-12	12		3	3	3	3	D
36B-61	6		2		4		E
36B-78	14			12		2	D
36B-90	1	SPECIAL					D
36D-78	14			10		4	D
40-9	47			1	22	24	A
40-10	29		4	9		16	A
40-19	19		2		17		A
40-55	55			1	19	35	I
40-56	85					85	A
40-58 *	58			1	19	38	I
40-63	61					61	A
40A-2	2			1	1 SIZE 4/0		D
40A-3	5	3			2		E
40A-4	6	4			2		A
40A-5 (GM)	5	5					A
40A-7	7	5			2		A
40A-8	8	4				4	E
40A-10	8		4			4	D
40A-11*	11	5				6	A
40A-14	14		8		6		A
40A-19	19		2	17			A
40A-20	20			2	18		D

Insert Arrangements	Total Contacts	Contact Sizes					Service Rating
		0	4	8	12	16	
40A-21	21		1		20		*
40A-24	24			8	16		D
40A-25	25		1		24		A
40A-27	27		2		25		A
40A-29 *	29			6	18	5	A
40A-30	30		1		29		A
40A-31	31				31		D
40A-34 *	34			1	33		I
40A-35	35				35		D
40A-38	38				38		A
40A-47	47			1	22	24	A
40A-56	85					85	A
40A-60	60					60	A
40A-62	62			2		60	A
40A-100	100	ALL SIZE 18					A
40A-130	130	114 SIZE 18			4	12	I
40A-150	150	ALL SIZE 18					I
40B-4	4	4					E
40B-5	5	3	1		1		A
40B-19	19			19			A
40B-37	37				37		A
40B-90	3	1 SPECIAL			2		D
40D-4	4			4			C
40D-37	37				37		A
40T-159*	159	ALL SIZE 20					I

*Note: Consult our Customer Service Department for insert arrangements
For pictorial insert arrangements refer to page 37-50.

Alternate Positions of Insert Arrangements (Key Stationary - Insert Rotated) Front View of Pin Insert

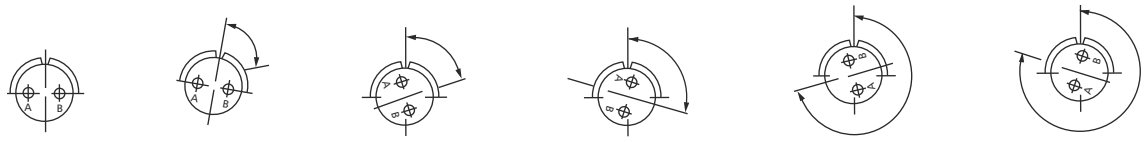

Normal Q W X Y Z

Insert Type	Degrees for Alternate Positions				
	Q	W	X	Y	Z
10SL-3	180	-	-	-	-
14S-2	-	-	120	240	-
14S-5	-	-	110	-	-
14S-6	-	90		-	-
14S-7	-	90	180	270	-
14S-9	-	70	145	215	290
16S-1	-	80	-	-	280
16S-4	-	35	110	250	325
16S-5	-	70	145	215	290
16S-8	-	-	170	265	-
16-7	-	80	110	250	280
16-9	-	35	110	250	325
16-10	-	90	180	270	-
16-11	-	35	110	250	325
16-13	-	35	110	250	325
16A-10	-	35	112	235	315
18-1	-	70	145	215	290
18-3	-	35	110	250	325
18-4	-	35	110	250	325
18-5	-	80	110	250	280
18-8	-	70	-	-	290
18-9	-	80	110	250	280
18-10	-	-	120	240	-
18-11	-	-	170	265	-
18-12	-	80	-	-	280
18-13	-	80	110	250	280
18-14	-	80	110	250	280
18-19	-	-	120	240	-
18-20	-	90	180	270	-
18-22	-	70	145	215	290
20-3	-	70	145	215	290
20-4	-	45	110	250	-
20-7	-	80	110	250	280
20-8	-	80	110	250	280
20-15	-	80	-	-	280
20-16	-	80	110	250	280
20-17	-	90	180	270	-
20-18	-	35	110	250	325
20-19	-	90	180	270	-
20-21	-	35	110	250	325

Insert Type	Degrees for Alternate Positions				
	Q	W	X	Y	Z
20-22	-	80	110	250	280
20-23	-	35	110	250	325
20-24	-	35	110	250	325
20-27	-	35	110	250	325
20-29	-	80	-	-	280
20-33	-	-	-	-	280
20A-8	-	35	110	250	325
20A-9	-	-	110	250	-
20A-29	-	45	-	210	-
20A-48	-	-	80	280	-
22-1	-	35	110	250	325
22-2	-	70	145	215	290
22-4	-	35	110	250	325
22-5	-	35	110	250	325
22-6	-	80	110	250	280
22-8	-	35	110	250	325
22-9	-	70	145	215	290
22-11	-	35	110	250	325
22-12	-	80	110	250	280
22-14	-	80	-	-	280
22-15	-	80	110	250	280
22-17	-	80	110	250	280
22-18	-	80	110	250	280
22-19	-	80	110	250	280
22-21	-	80	110	250	280
22-22	-	-	110	250	-
22-23	-	35	-	250	-
22-27	-	80	-	250	280
22-28	-	80	-	-	280
22-34	-	80	110	250	280
22A-9	-	60	135	250	305
22A-10	-	-	120	240	-
22A-16	-	80	110	250	280
22A37	-	80	112	250	280
22B-10	-	45	110	250	315
24-2	-	80	-	-	280
24-5	-	80	110	250	280
24-06	-	40	-	-	320
24-6	-	80	110	250	280
24-7	-	80	110	250	280

Insert Type	Degrees for Alternate Positions				
	Q	W	X	Y	Z
24-9	-	35	110	250	325
24-10	-	80	-	-	280
24-11	-	35	110	250	325
24-12	-	80	110	250	280
24-20	-	80	110	250	280
24-21	-	80	110	250	280
24-22	-	45	110	250	-
24-27	-	80	-	-	280
24-28	-	80	110	250	280
24-67	-	80	-	-	335
24A-2	-	35	110	250	325
24A-6	-	42	134	262	339
24A-7	-	80	-	-	280
24A-11	-	35	110	250	325
24A-25	-	80	110	250	280
24A-28	-	65	146	235	-
24A-55	-	80	110	250	280
28-1	-	80	110	250	280
28-2	-	35	110	250	325
28-3	-	70	145	215	290
28-5	-	35	110	250	325
28-6	-	70	145	215	290
28-9	-	80	110	250	280
28-10	-	80	110	250	280
28-11	-	80	110	250	280
28-12	-	90	180	270	-
28-15	-	80	110	250	280
28-16	-	80	110	250	280
28-17	-	80	110	250	280
28-18	-	70	145	215	290
28-19	-	80	110	250	280
28-20	-	80	110	250	280
28-21	-	80	110	250	280
28-22	-	70	145	215	290
28-51	23	80	135	195	-
28-59	-	35	110	250	325
28-72	-	72	144	216	288
28A-7	-	60	166	270	320
28A-9	-	110	250	260	280
28A-10	-	80	135	195	-
28A-14	-	35	90	-	-
28A-16	-	65	135	225	275
28A-31	-	35	-	260	310
28A-35	-	80	110	250	280
28B-7	-	80	-	-	280
28B-35	-	80	110	250	280
28P-3	-	70	145	215	290

Specifications and dimensions subject to change
Dimensions shown in mm.

Insert Rotations - Alternate Positions

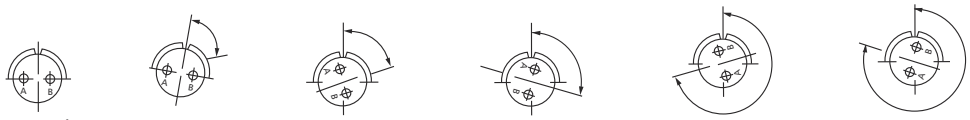

Alternate Positions of Insert Arrangements (Key Stationary - Insert Rotated)

Front View of Pin Insert

Insert Type	Degrees for Alternate Positions				
	Q	W	X	Y	Z
32-1	-	80	110	250	280
32-2	-	70	145	215	290
32-5	-	80	110	250	325
32-6	-	80	110	25	280
32-7	-	80	125	235	280
32-8	-	80	125	235	280
32-9		80	110	250	280
32-13	-	80	110	250	280
32-15	80	35	110	250	280
32-17	-	45	110	250	-
32-22	-	80	110	250	280
32-31	-	80	125	215	280
32-59	-	36	108	252	324
32-68	-	65	135	225	275
32-76	-	80	110	250	280
32-101	-	30	142	-	-
32A-3	-	22	44	75	98
32A-5	-	90	180	270	-
32A-8	-	35	122	-	315
32A-13	-	65	130	230	295
32A-14	-	35	90	-	-
32A-22	-	55	135	230	295
32A-25	-	60	120	-	-
32A-27	-	30	115	285	335
32A-30	-	65	-	-	-
32A-40	-	35	130	-	-
32A-48	-	80	125	235	280
32A-55	-	80	110	250	280
32B-22	-	35	110	250	325
32D-2	-	80	110	-	-

Insert Type	Degrees for Alternate Positions				
	Q	W	X	Y	Z
40-9	-	65	125	225	310
40-10	-	65	125	225	310
40-19	-	35	110	250	325
40-56	150	72	144	216	288
40-58	-	80	-	-	-
40-63	-	80	110	250	280
40A-2	-	35	110	250	325
40A-3	-	70	145	215	290
40A-4	-	50	120	240	325
40A-5	-	33	-	-	270
40A-7	-	108	-	-	-
40A-8	-	35	110	250	325
40A-14	-	80	135	195	-
40A-20	-	50	110	250	280
40A-21	-	50	130	260	280
40A-24	-	27	-	-	-
40A-25	-	50	130	260	280
40A-27	-	45	110	250	315
40A-30	-	30	-	-	295
40A-31	-	80	110	250	280
40A-35	-	70	130	230	290
40A-37		80	110	250	280
40A-38	-	37	74	285	322
40A-47	-	65	125	225	310
40A-56	-	72	144	216	288
40A-60	-	80	110	250	280
40A-62	-	80	130	230	280
40A-100	-	30	105	230	315
40A-130	-	45	113	-	309
40B-4	-	45	110	-	-
40B-19	-	35	105	225	325
40B-37	-	30	135	-	-
40D-4	-	45	110	-	-
40D-37	-	80	110	250	280

36-3	-	70	145	215	290
36-5	-	-	120	240	-
36-6	-	35	110	250	325
36-7	-	80	110	250	280
36-8	-	80	110	250	280
36-9	-	80	125	235	280
36-10	-	80	125	235	280
36-15	-	60	125	245	305
36-54	-	67	-	-	-
36-66	-	110	250	260	280
36-77	-	-	90	-	-
36-78	-	35	106	254	325
36A-2	-	35	110	250	325
36A-10	-	45	110	250	315
36A-22	-	80	110	250	280
36A-48	-	65	-	-	-
36A-51	-	45	135	225	315
36A-61	-	80	-	-	280
36A-72	-	-	110	-	-
36B-78	-	35	106	254	325
36D-78	-	35	106	254	325
36B-12	-	45	110	150	290

Front View of Male Insert 1-2 Contacts

Contact Legend

20	18	16	16HV	12	12HV	8	4	0	4/0

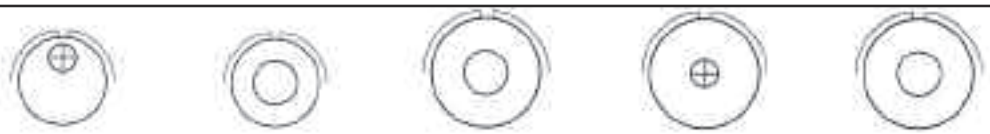

Insert Arrangement	**16-2**	**16-12**	**18-6**	**18-16**	**18-61**
Number of Contacts	1	1	1	1	1
Size of Contacts	12	4	4	12	Coax Size 4
Service Rating	E	A	D	C	D

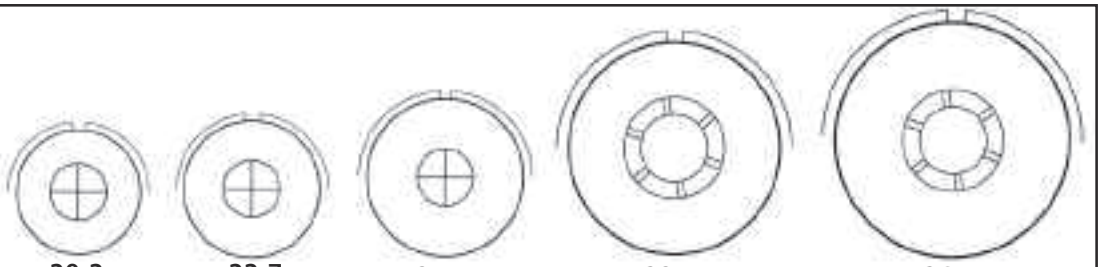

Insert Arrangement	**20-2**	**22-7**	**24A-1**	**32A-1**	**36A-1**
Number of Contacts	1	1	1	1	1
Size of Contacts	0	0	0	4/0	4/0
Service Rating	D	E	B	B	C

Insert Arrangement	**10SL-4**	**14S-9**	**16S-4**	**16-11**	**16-13**	**16-52**
Number of Contacts	2	2	2	2	2	2
Size of Contacts	16	16	16	12	12	12
Service Rating	A	A	D	A	A	A
					A=Iron B=Constantan	A=Alumel B=Chromel

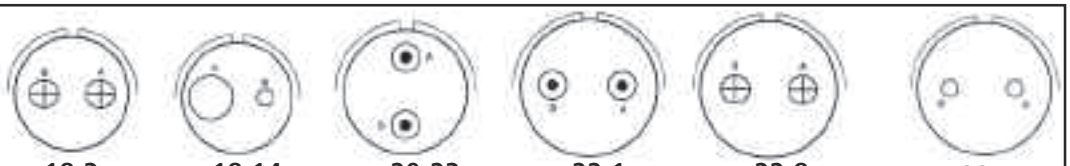

Insert Arrangement	**18-3**	**18-14**	**20-23**	**22-1**	**22-8**	**22-11**
Number of Contacts	2	2	2	2	2	2
Size of Contacts	12	1-4, 1-16	8	8	12	16
Service Rating	D	A	A	D	E	B

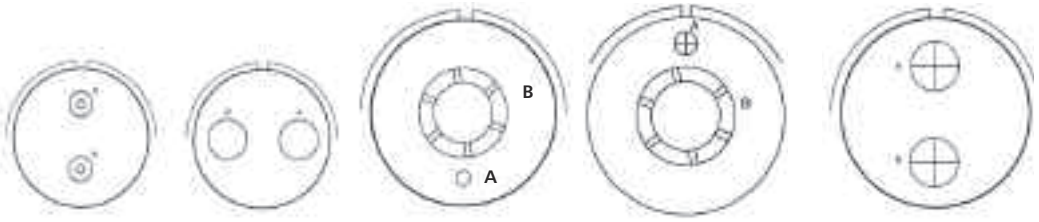

Insert Arrangement	**24A-2P (FT)**	**24-9**	**32A-2**	**32D-2**	**32-5**
Number of Contacts	2	2	2	2	2
Size of Contacts	12	4	1-4/0, 1-16	1-12, 1-4/0	0
Service Rating	HV (4200V DC)	A	D	A	D

Specifications and dimensions subject to change
Dimensions shown in mm.

Front View of Male Insert 2-4 Contacts

Contact Legend

20	18	16	16HV	12	12HV	8	4	0	4/0

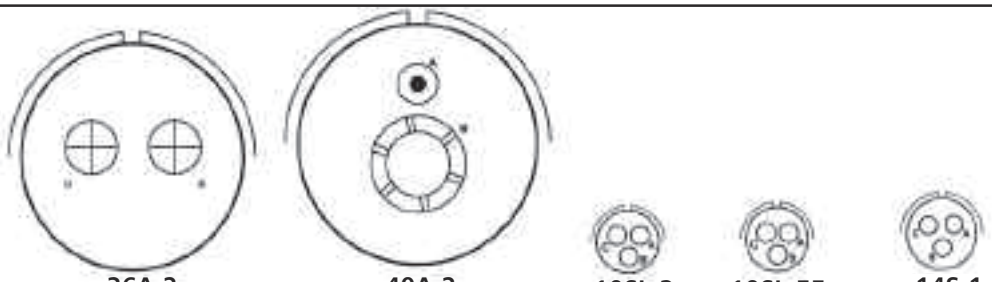

	36A-2	40A-2	10SL-3	10SL-55	14S-1
Insert Arrangement	36A-2	40A-2	10SL-3	10SL-55	14S-1
Number of Contacts	2	2	3	3	3
Size of Contacts	0	1-8, 1-4/0	16	16	16
Service Rating	A	D	A	1 (A=Alumel B=Chromel)	A

	14S-7	14S-12	16S-5	16-7	16-10
Insert Arrangement	14S-7	14S-12	16S-5	16-7	16-10
Number of Contacts	3	3	3	3	3
Size of Contacts	16	16	16	1-8, 2-16	12
Service Rating	A	A (14S-1 rotated by 100º)	A	A	A

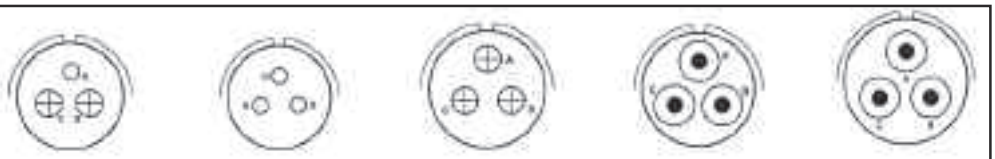

	18-5	18-22	20-3	20-19	22-2
Insert Arrangement	18-5	18-22	20-3	20-19	22-2
Number of Contacts	3	3	3	3	3
Size of Contacts	2-12, 1-16	16	12	8	8
Service Rating	D	D	D	A	D

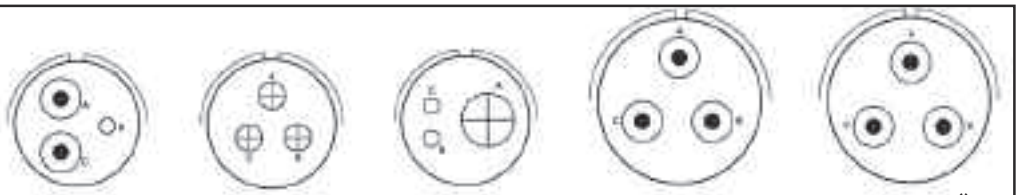

	22-6	22-9	22-21	28-3	28P-3*
Insert Arrangement	22-6	22-9	22-21	28-3	28P-3*
Number of Contacts	3	3	3	3	3
Size of Contacts	2-8, 1-16	12	1-0, 2-16	8	8
Service Rating	D	E	A	E	C

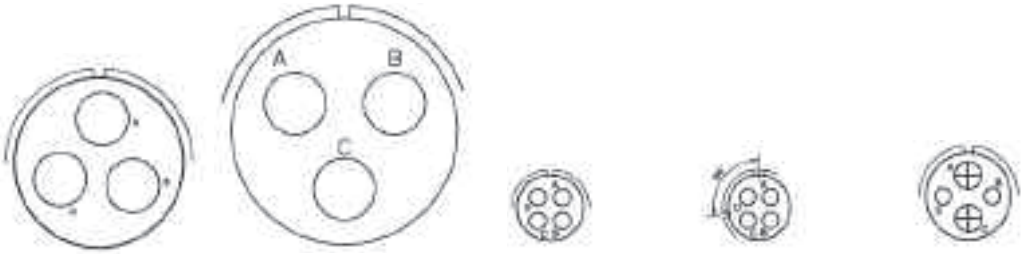

	28-6	32A-3	14S-2	14S-10	16-9
Insert Arrangement	28-6	32A-3	14S-2	14S-10	16-9
Number of Contacts	3	3	4	4	4
Size of Contacts	4	4	16	16	2-12, 2-16
Service Rating	D	B	I	I (14S-2 rotated by 100º)	A

**With protection front and rear.*

ITT

Specifications and dimensions subject to change
Dimensions shown in mm.

Contact Legend

20	18	16	16HV	12	12HV	8	4	0	4/0

	18-4	18-10	18-13	20-4	20-24
Insert Arrangement	18-4	18-10	18-13	20-4	20-24
Number of Contacts	4	4	4	4	4
Size of Contacts	16	12	1-8, 3-12	12	2-8, 2-16
Service Rating	D	A	A	D	A

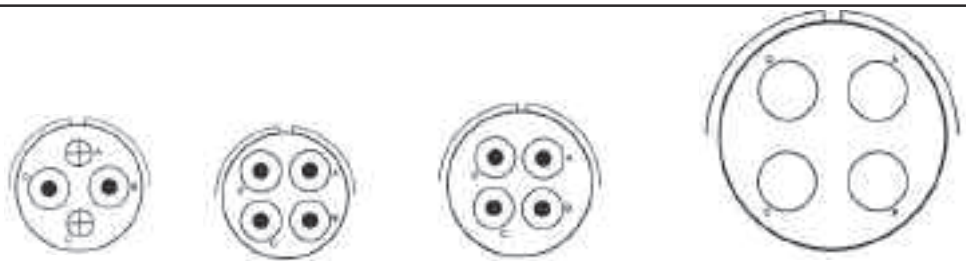

	22-4	22-22	24-22	32-17
Insert Arrangement	22-4	22-22	24-22	32-17
Number of Contacts	4	4	4	4
Size of Contacts	2-8, 2-12	8	8	4
Service Rating	A	A	D	D

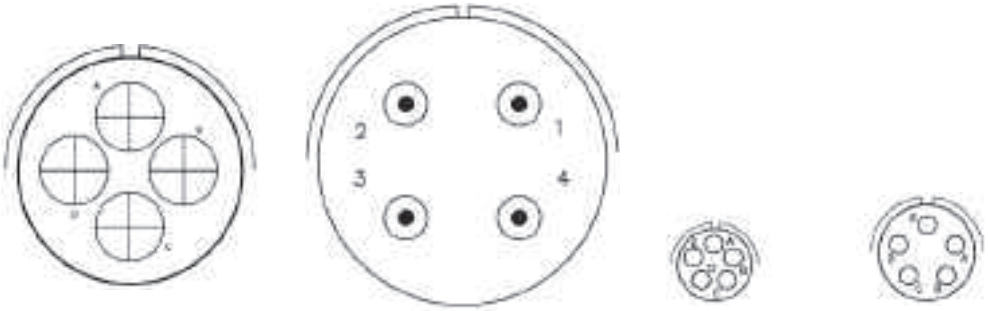

	36-5	40D-4	14S-5	16S-8
Insert Arrangement	36-5	40D-4	14S-5	16S-8
Number of Contacts	4	4	5	5
Size of Contacts	0	8	16	16
Service Rating	A	C	I	A

	18-11	18-20	18-30	18-31	22-12
Insert Arrangement	18-11	18-20	18-30	18-31	22-12
Number of Contacts	5	5	5	5	5
Size of Contacts	12	16	16	16	2-8, 3-16
Service Rating	A	A	A	A	D
			(18-20 rotated by 110º)	(18-20 rotated by 260º)	

Specifications and dimensions subject to change
Dimensions shown in mm.

Contact Legend

20 18 16 16HV 12 12HV 8 4 0 4/ 0

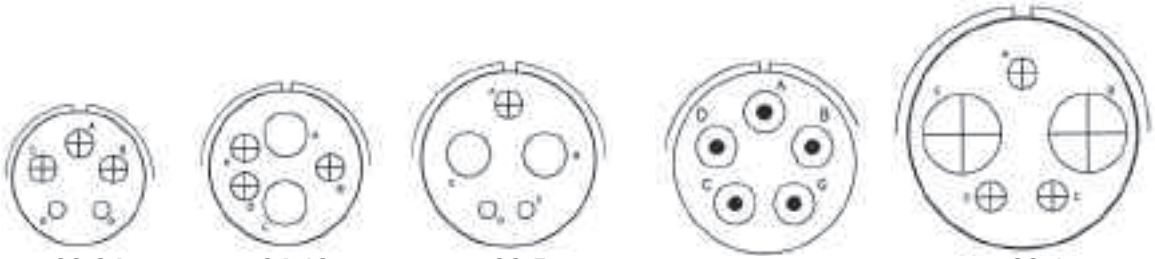

	22-34	24-12	28-5	28A-5GM	32-1
Insert Arrangement	22-34	24-12	28-5	28A-5GM	32-1
Number of Contacts	5	5	5	5	5
Size of Contacts	3-12, 2-16	2-4, 3-12	2-4, 1-12, 2-16	8	2-0, 3-12
Service Rating	D	A	D	A	A=E;B,C,D,E=D

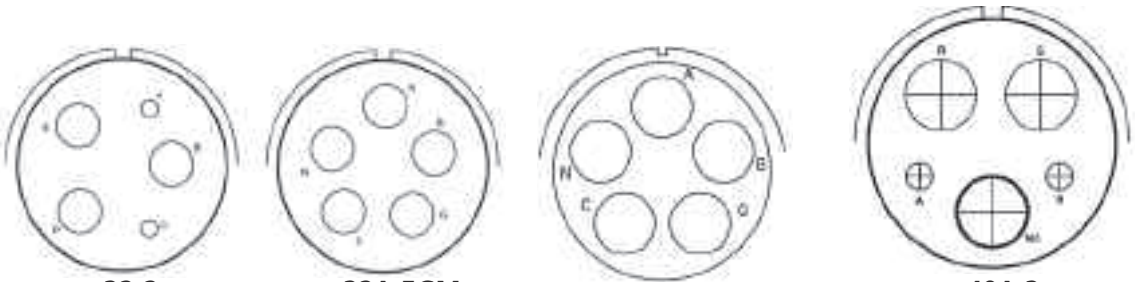

	32-2	32A-5GM	32B-5GM	40A-3
Insert Arrangement	32-2	32A-5GM	32B-5GM	40A-3
Number of Contacts	5	5	5	5
Size of Contacts	3-4, 2-16	4	4	1-0M, 2-0, 2-12
Service Rating	E	A	A	E

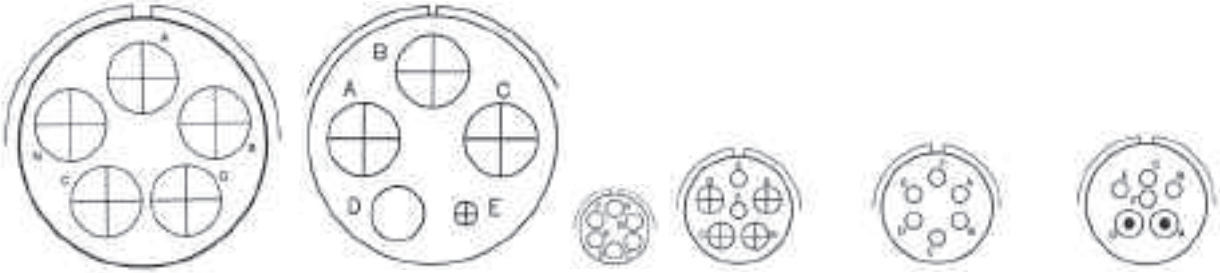

	40A-5 GM	40B-5	14S-6	18-06	18-12	20-8
Insert Arrangement	40A-5 GM	40B-5	14S-6	18-06	18-12	20-8
Number of Contacts	5	5	6	6	6	6
Size of Contacts	0	3-0, 1-4, 1-12	16	4-12, 2-16	16	2-8, 4-16
Service Rating	A	A	I	A	A	I

	20-17	20-22	22-5	22-15	24-06
Insert Arrangement	20-17	20-22	22-5	22-15	24-06
Number of Contacts	6	6	6	6	6
Size of Contacts	5-12, 1-16	3-8, 3-16	2-12, 4-16	5-12, 1-16	4-8, 2-16
Service Rating	A	A	D	D=E;A,B,C,E,F=A	D

Contact Legend

20 18 16 16HV 12 12HV 8 4 0 4/0

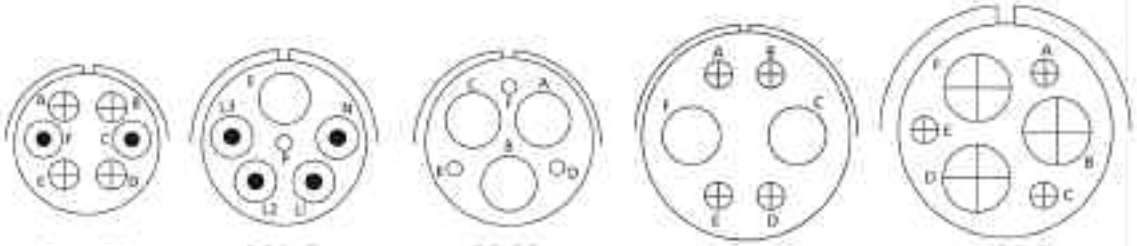

	24A-6*	28A-6	28-22	32A-6	36-3
Insert Arrangement	24A-6*	28A-6	28-22	32A-6	36-3
Number of Contacts	6	6	6	6	6
Size of Contacts	2-8, 4-12	1-4, 4-8, 1-16	3-4, 3-16	2-4, 4-12	3-0, 3-12
Service Rating	D	A	D	E	D

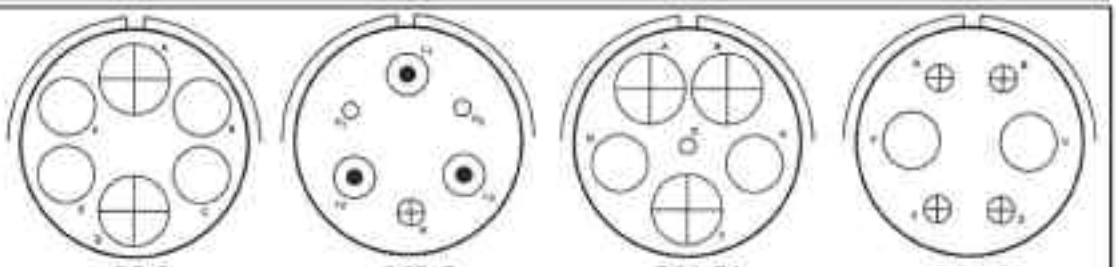

	36-6	36B-6	36A-51	36A-61
Insert Arrangement	36-6	36B-6	36A-51	36A-61
Number of Contacts	6	6	6	6
Size of Contacts	2-0, 4-4	3-8, 1-12, 2-16	3-0, 2-4, 1-16	2-4, 4-12
Service Rating	A	B	D	E

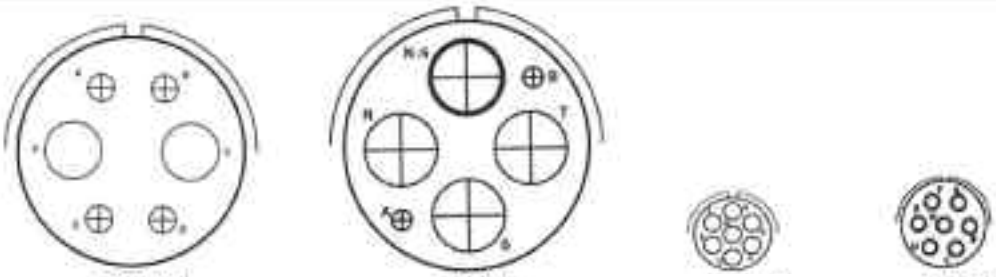

	36B-61	40A-4	14SA-7	16S-1
Insert Arrangement	36B-61	40A-4	14SA-7	16S-1
Number of Contacts	6	6	7	7
Size of Contacts	2-4, 4-12	1-0M, 3-0, 2-12	16	16
Service Rating	E	A	I	A

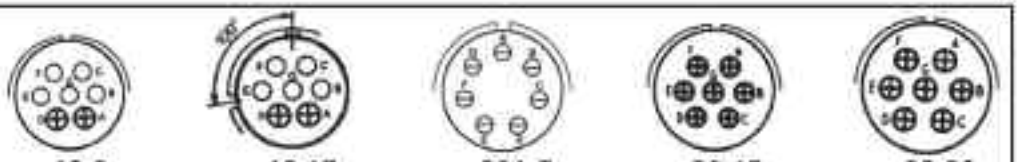

	18-9	18-17	20A-7	20-15	22-28
Insert Arrangement	18-9	18-17	20A-7	20-15	22-28
Number of Contacts	7	7	7	7	7
Size of Contacts	2-12, 5-16	2-12, 5-16	18	12	12
Service Rating	I	I	D	A	A

(18-9 rotated by 100°)

Contact Legend

20	18	16	16HV	12	12HV	8	4	0	4/0

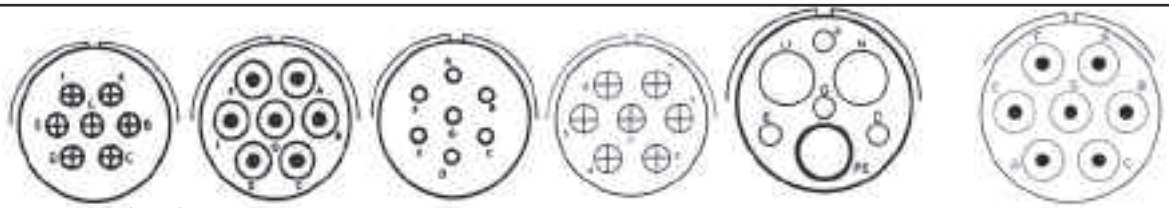

	24-2 (GM)	24-10	24-27	24A-7	28A-7	28B-7
Insert Arrangement	24-2 (GM)	24-10	24-27	24A-7	28A-7	28B-7
Number of Contacts	7	7	7	7	7	7
Size of Contacts	12	8	16	12	2-4, 1-4M, 4-16	8
Service Rating	D	A	E	D	A	A

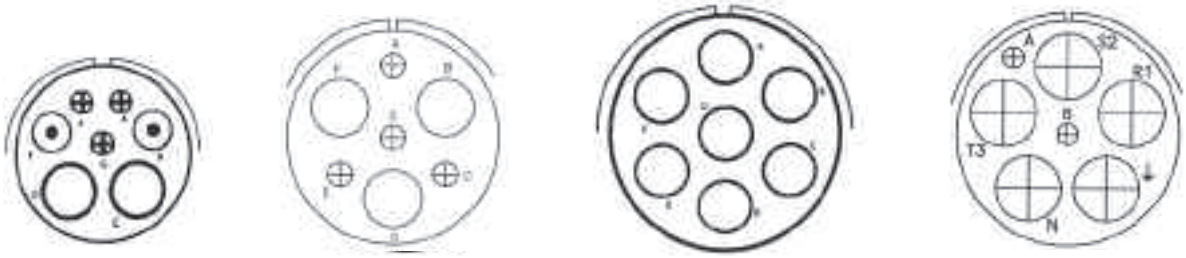

	28-10	32A-7	36-77	40A-7
Insert Arrangement	28-10	32A-7	36-77	40A-7
Number of Contacts	7	7	7	7
Size of Contacts	2-4, 2-8, 3-12	3-4, 4-12	4	5-0, 2-12
Service Rating	G=D;BAL.=A	D	D	A

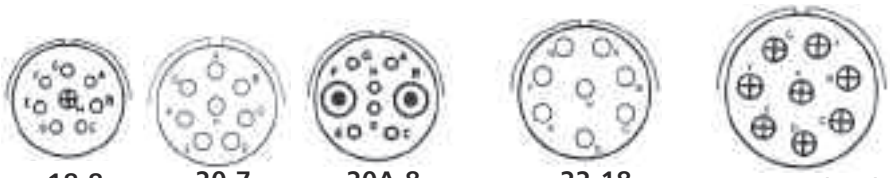

	18-8	20-7	20A-8	22-18	24-6 (HM)
Insert Arrangement	18-8	20-7	20A-8	22-18	24-6 (HM)
Number of Contacts	8	8	8	8	8
Size of Contacts	1-12, 7-16	16	2-8, 6-16	16	12
Service Rating	A	A,B,H,G=D; C,D,E,F=A	I	A,B,F,G,H=D; C,D,E=A	A,G,H=D;BAL.=A

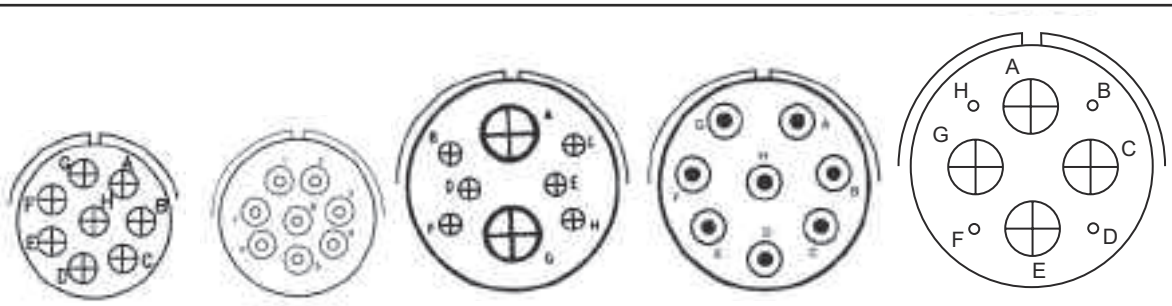

	22-23	24A-8 (FT)	32-15	32A-8	40A-8
Insert Arrangement	22-23	24A-8 (FT)	32-15	32A-8	40A-8
Number of Contacts	8	8	8	8	8
Size of Contacts	12	16	2-0, 6-12	8	4-0, 4-16
Service Rating	H=D;BAL.=A	HV=15KV	D	A	E

Contact Legend

20 18 16 16HV 12 12HV 8 4 0 4/0

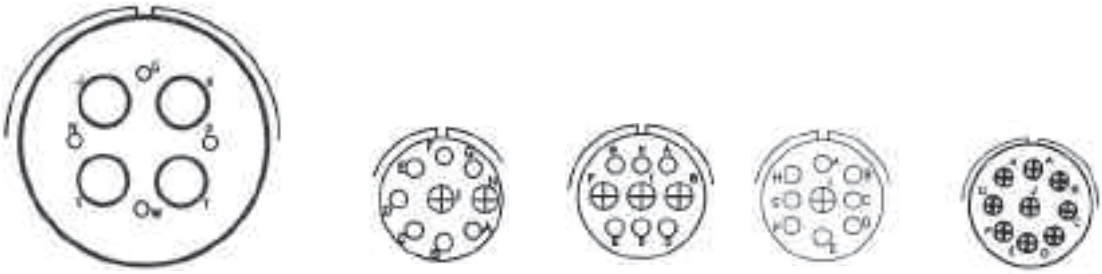

	40A-10	20-16	20-18	20-21	20A-9
Insert Arrangement	8	9	9	9	9
Number of Contacts	4-4, 4-16	2-12, 7-16	3-12, 6-16	1-12, 8-16	12
Size of Contacts	D	A	A	A	J=D;BAL.=I
Service Rating					

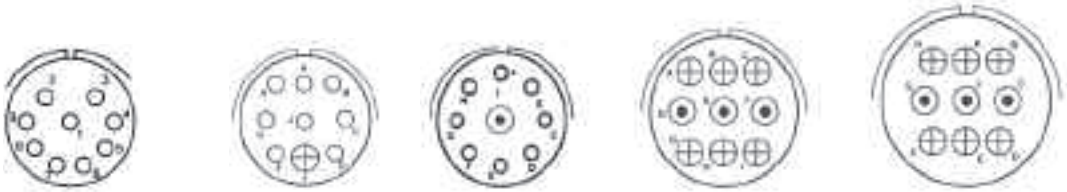

	22A-9	22-17	*22-27*	24-11 (EM)	28-1
Insert Arrangement	9	9	9	9	9
Number of Contacts	16	1-12, 8-16	1-8, 8-16	3-8, 6-12	3-8, 6-12
Size of Contacts	1,2,3=D;BAL.=A	A=D;BAL.=A	J=D;BAL.=A	A	A,J,E=D;BAL.=A
Service Rating					

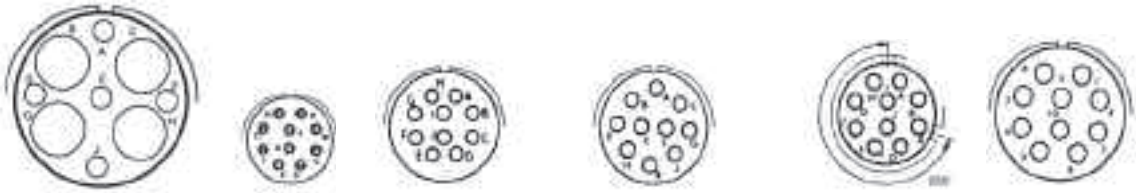

	28A-9/28B-9	16A-10	18-1	18-19	18-24	22A-10
Insert Arrangement	9	10	10	10	10	10
Number of Contacts	4-4, 5-16	18	16	16	16	16
Size of Contacts	A	A	B,C,F,G=A;BAL.=I	A	B,C,F,G=A;BAL.=I	A
Service Rating					(18-1 rotated by 250°)	

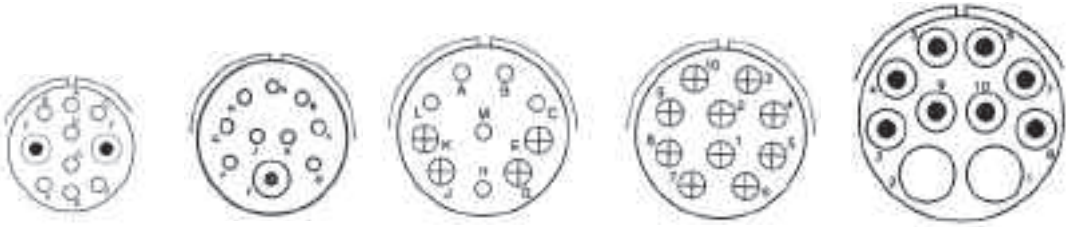

	22B-10	24-21	28-19	28A-10	32A-10
Insert Arrangement	10	10	10	10	10
Number of Contacts	2-8, 8-16	1-8, 9-16	4-12, 6-16	12	2-4, 8-8
Size of Contacts	A	D	H,M=B;A,B=D;BAL.=A	D	A
Service Rating					

**Consult Customer Service.*

Contact Legend

20 18 16 16HV 12 12HV 8 4 0 4/0

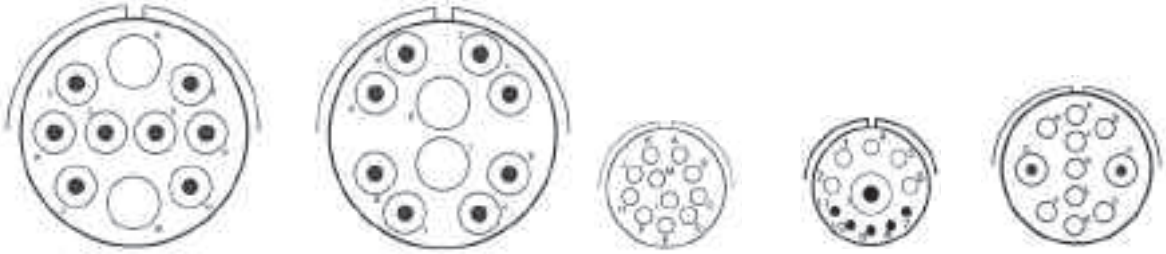

	36A-10	36B-10	20-33	20A-11	24A-11
Insert Arrangement	36A-10	36B-10	20-33	20A-11	24A-11
Number of Contacts	10	10	11	11	11
Size of Contacts	2-4, 8-8	2-4, 8-8	16	5-20, 1-8, 5-16	2-8, 9-16
Service Rating	A	A	A	A	A

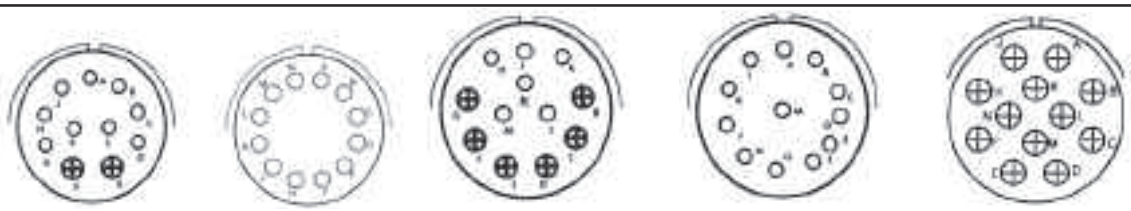

	24-20	24-19	28-9	28-18	28-51
Insert Arrangement	24-20	24-19	28-9	28-18	28-51
Number of Contacts	11	12	12	12	12
Size of Contacts	2-12, 9-16	16	6-12, 6-16	16	12
Service Rating	D	A	D	M=C;G,H,J,K,L=D A,B=A;BAL.=I	D

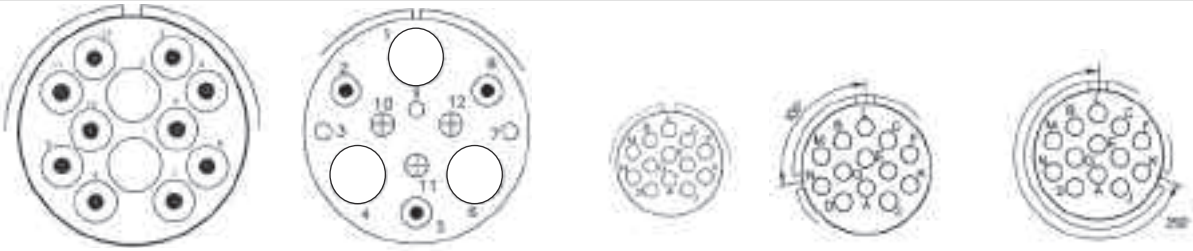

	36A-12	36B-12	20-11	20-25	20-30
Insert Arrangement	36A-12	36B-12	20-11	20-25	20-30
Number of Contacts	12	12	13	13	13
Size of Contacts	2-4, 10-8	3-4, 3-8, 3-12; 3-16	16	16	16
Service Rating	A	D	I	I	I
				(20-11 rotated by 100º)	(20-11 rotated by 250º)

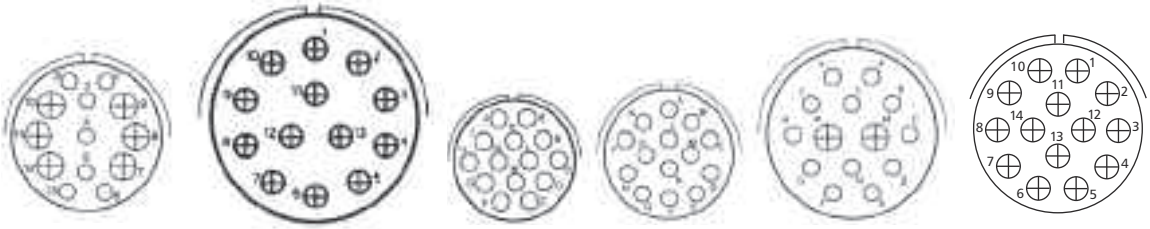

	24-013	32A-13	20-27	22-19	28-2	28A-14
Insert Arrangement	24-013	32A-13	20-27	22-19	28-2	28A-14
Number of Contacts	13	13	14	14	14	14
Size of Contacts	6-12, 7-16	12	16	16	2-12, 12-16	12
Service Rating	A	D	A	A	D	D

Contact Legend

20	18	16	16HV	12	12HV	8	4	0	4/0

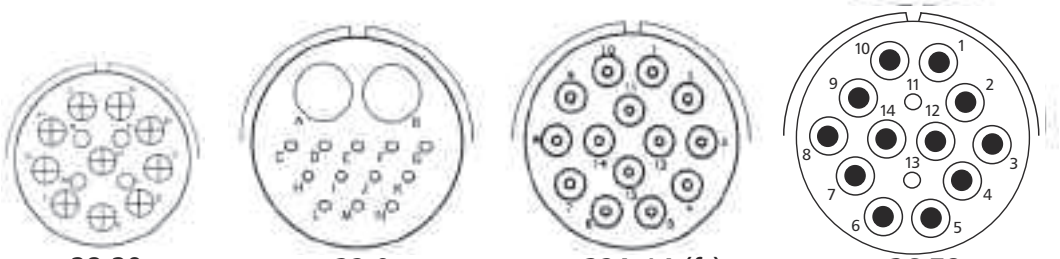

	28-20	32-9	32A-14 (ft)	36-78
Insert Arrangement	28-20	32-9	32A-14 (ft)	36-78
Number of Contacts	14	14	14	14
Size of Contacts	10-12, 4-16	2-4, 12-16	16	12-8, 2-16
Service Rating	A	D	HV (6 KVAC)	D

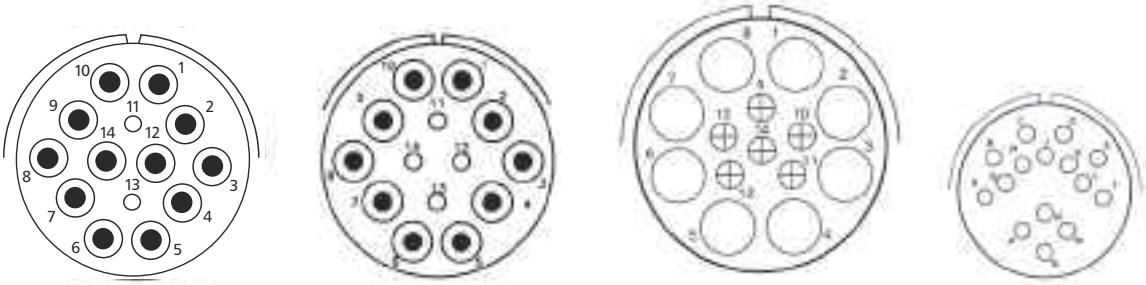

	36B-78	36D-78	40A-14	28-17
Insert Arrangement	36B-78	36D-78	40A-14	28-17
Number of Contacts	14	14	14	15
Size of Contacts	12-8, 2-16	10-8, 4-16	8-4, 6-12	16
Service Rating	D	D	A	R=B;M,N,P=D BAL.=A

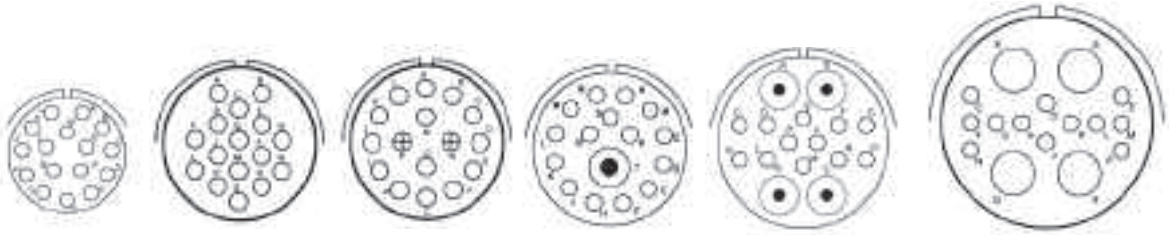

	22A-16	24-5	24-7	24A-16	28A-16	32-68
Insert Arrangement	22A-16	24-5	24-7	24A-16	28A-16	32-68
Number of Contacts	16	16	16	16	16	16
Size of Contacts	16	16	2-12, 14-16	1-8, 15-16	4-8, 12-16	4-4, 12-16
Service Rating	I	A	A	E	A	A

	20-29	28-59	20A-48	22-14	24-67
Insert Arrangement	20-29	28-59	20A-48	22-14	24-67
Number of Contacts	17	17	19	19	19
Size of Contacts	16	7-12, 10-16	16	16	12
Service Rating	A	A	I	A	A

Specifications and dimensions subject to change
Dimensions shown in mm.

Contact Legend

20 18 16 16HV 12 12HV 8 4 0 4/0

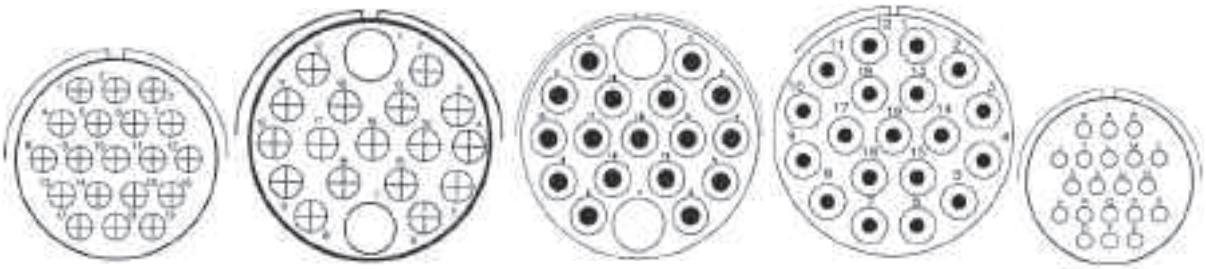

	32-76	40-19	40A-19	40B-19	28-16
Insert Arrangement	32-76	40-19	40A-19	40B-19	28-16
Number of Contacts	19	19	19	19	20
Size of Contacts	12	2-4, 17-12	2-4, 17-8	8	16
Service Rating	A	A	A	A	A

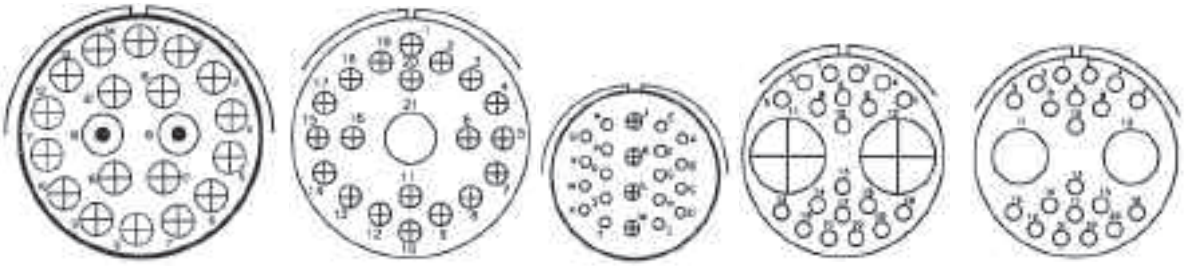

	40A-20	40A-21	28-11	32A-22	32B-22
Insert Arrangement	40A-20	40A-21	28-11	32A-22	32B-22
Number of Contacts	20	21	22	22	22
Size of Contacts	2-8, 18-12	1-4, 20-12	4-12, 18-16	2-0, 20-16	2-4, 20-16
Service Rating	D	21=D;BAL.=A	A	A	A

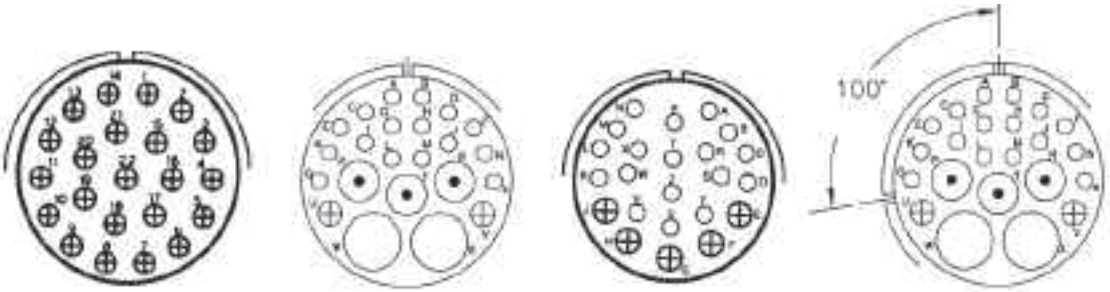

	36A-22	32-6	32-13	32-16
Insert Arrangement	36A-22	32-6	32-13	32-16
Number of Contacts	22	23	23	23
Size of Contacts	12	2-4, 3-8, 2-12, 16-16	5-12, 18-16	2-4, 3-8, 2-12, 16-16
Service Rating	D	A	D	A (32-6 rotated by 100º)

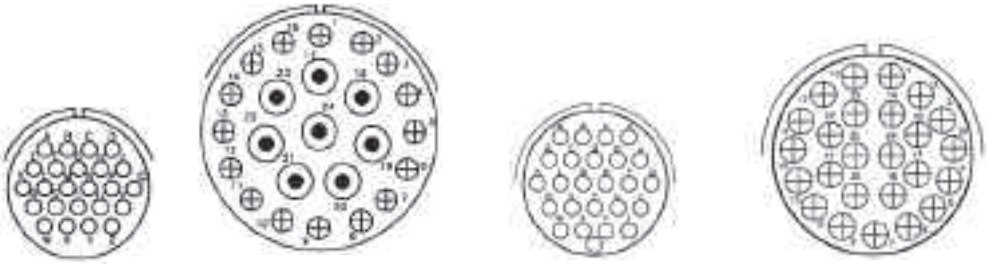

	24-28	40A-24	24A-25	32A-25
Insert Arrangement	24-28	40A-24	24A-25	32A-25
Number of Contacts	24	24	25	25
Size of Contacts	16	8-8, 16-12	16	12
Service Rating	I	D	I	A

Contact Legend

20 18 16 16HV 12 12HV 8 4 0 4/0

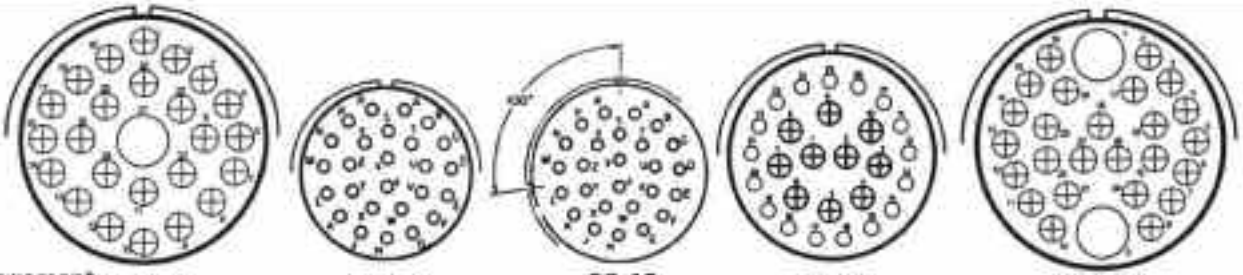

	40A-25	28-12	28-13	32A-27	40A-27
Insert Arrangement	40A-25	28-12	28-13	32A-27	40A-27
Number of Contacts	25	26	26	27	27
Size of Contacts	1-4, 24-12	16	16	10-12, 17-16	2-4, 25-12
Service Rating	A	A	A	A	A

(28-12 rotated by 100°)

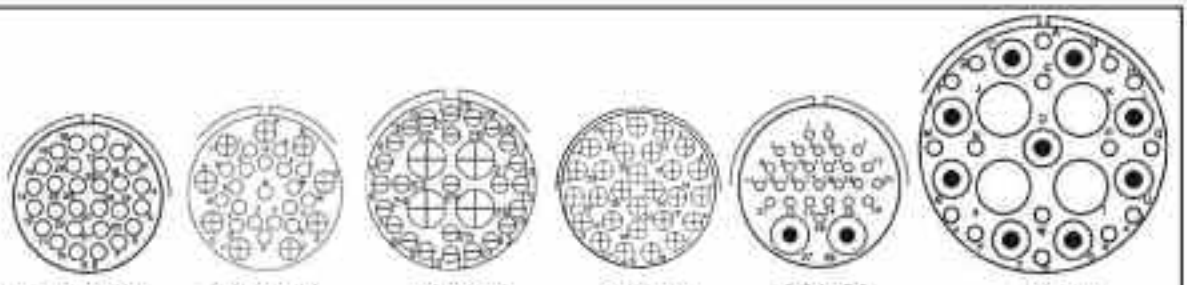

	24A-28	*28A-63*	20A-29	32A-28	28A-29	40-10
Insert Arrangement	24A-28	*28A-63*	20A-29	32A-28	28A-29	40-10
Number of Contacts	28	28	29	28	29	29
Size of Contacts	16	9-12, 19-16	4-12, 25-18	12	2-8, 27-16	4-4, 9-8, 16-16
Service Rating	I	e=A;BAL.=I	I	A	A	A

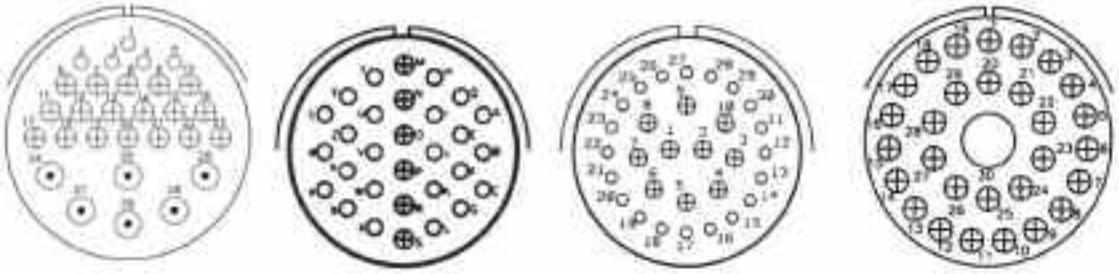

	40A-29	32-8	32A-30	40A-30
Insert Arrangement	40A-29	32-8	32A-30	40A-30
Number of Contacts	29	30	30	30
Size of Contacts	5-16; 18-12; 6-8	6-12, 24-16	10-12, 20-16	1-4, 29-12
Service Rating	A	A	A	A

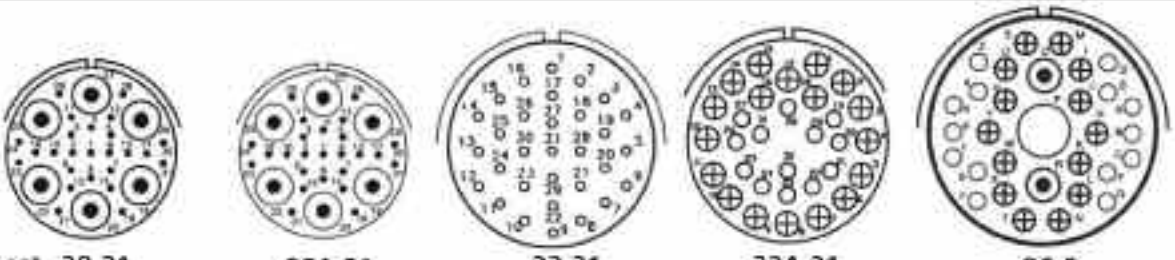

	28-31	28A-31	32-31	32A-31	36-9
Insert Arrangement	28-31	28A-31	32-31	32A-31	36-9
Number of Contacts	31	31	31	31	31
Size of Contacts	6-8, 25-20	6-8, 25-20	16	18-12, 13-16	1-4, 2-8; 14-12, 14-16
Service Rating	I	I	A	A	A

Specifications and dimensions subject to change
Dimensions shown in mm.

Front View of Male Insert 31-47 Contacts

Contact Legend

20	18	16	16HV	12	12HV	8	4	0	4/0

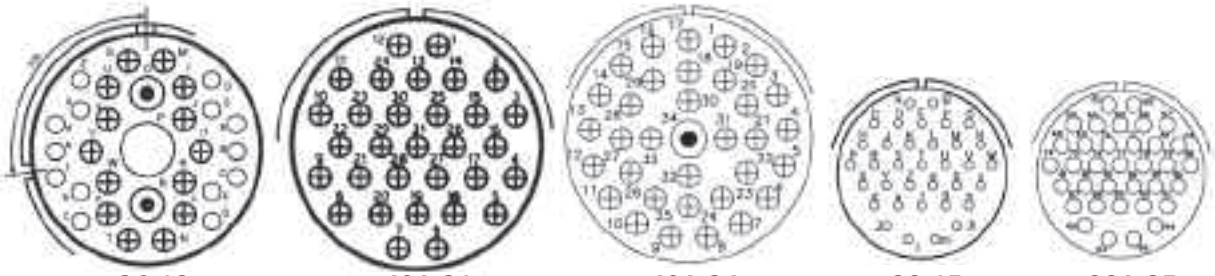

Insert Arrangement	**36-18**	**40A-31**	**40A-34**	**28-15**	**28A-35**
Number of Contacts	31	31	34	35	35
Size of Contacts	1-4, 2-8, 14-12, 14-16	12	1-8, 33-12	16	16
Service Rating	A (36-9 rotated by 100º)	D	I	A	A

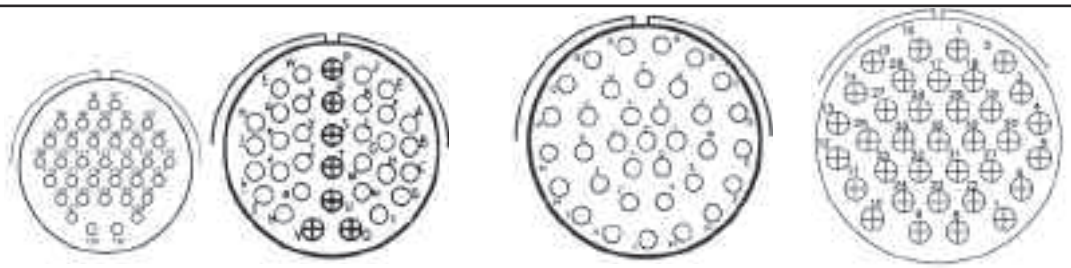

Insert Arrangement	**28B-35**	**32-7**	**36-15**	**40A-35**
Number of Contacts	35	35	35	35
Size of Contacts	16	7-12, 28-16	16	12
Service Rating	A	A,B,h,j=I;BAL.=A	A M=D;BAL.=A	D

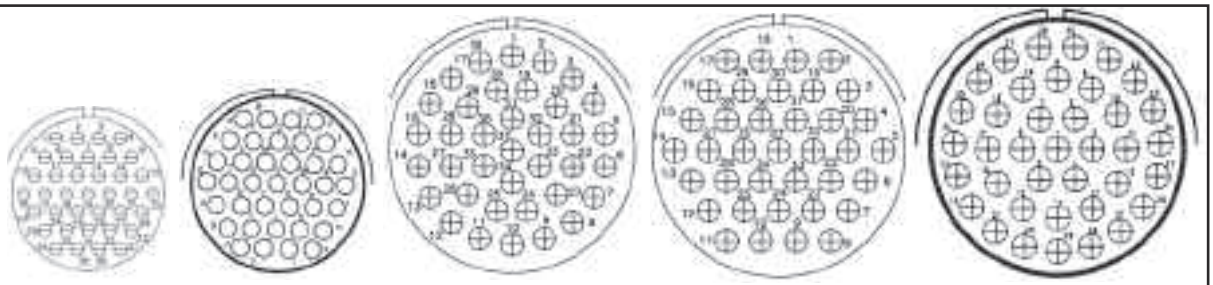

Insert Arrangement	**22A-37**	**28-21**	**40B-37**	**40D-37**	**40A-38**
Number of Contacts	37	37	37	37	38
Size of Contacts	18	16	12	12	12
Service Rating	A	A	A	A	A

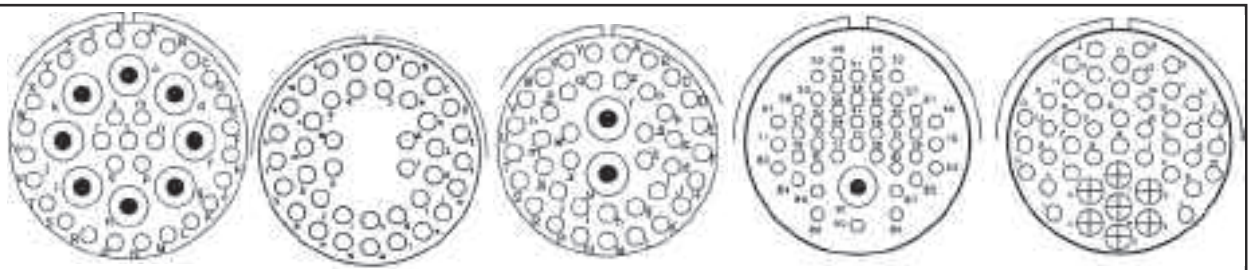

Insert Arrangement	**36-54**	**32A-40**	**32-59**	**36-74**	**36-7**
Number of Contacts	39	40	42	44	47
Size of Contacts	8-8, 31-16	16	2-8, 40-16	1-8, 43-16	7-12, 40-16
Service Rating	A	A	A	A	A

Contact Legend

20	18	16	16HV	12	12HV	8	4	0	4/0

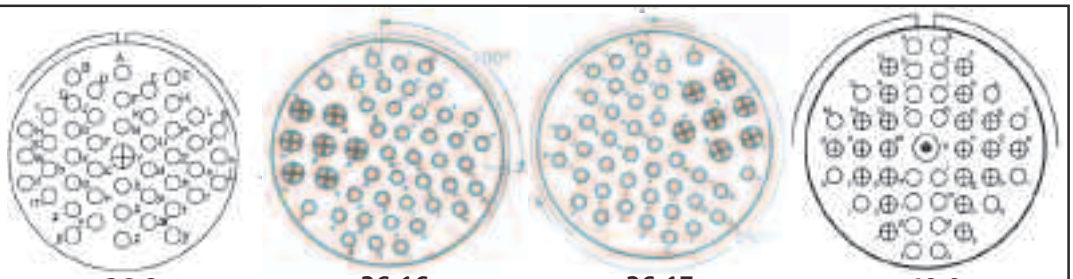

	36-8	36-16	36-17	40-9
Insert Arrangement	36-8	36-16	36-17	40-9
Number of Contacts	47	47	47	47
Size of Contacts	1-12, 46-16	7-12, 40-16	7-12, 40-16	1-8, 22-12, 24-16
Service Rating	A	A	A	A
		(36-7 rotated by 100º)	(36-7 rotated by 250º)	

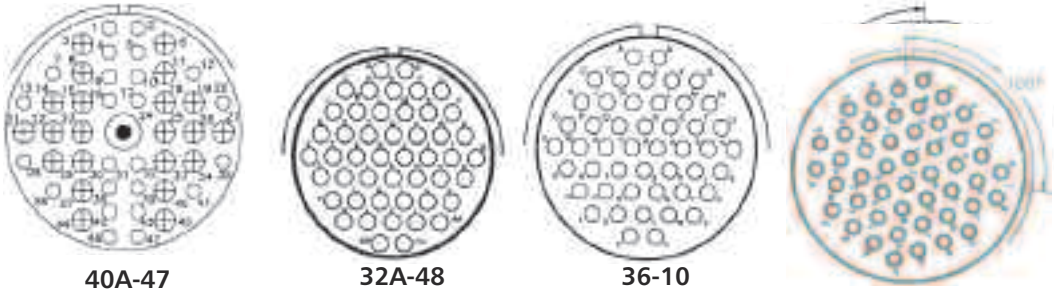

	40A-47	32A-48	36-10	
Insert Arrangement	40A-47	32A-48	36-10	
Number of Contacts	47	48	48	48
Size of Contacts	1-8, 22-12, 24-16	16	16	16
Service Rating	A	I	A	A
				(36-10 rotated by 100º)

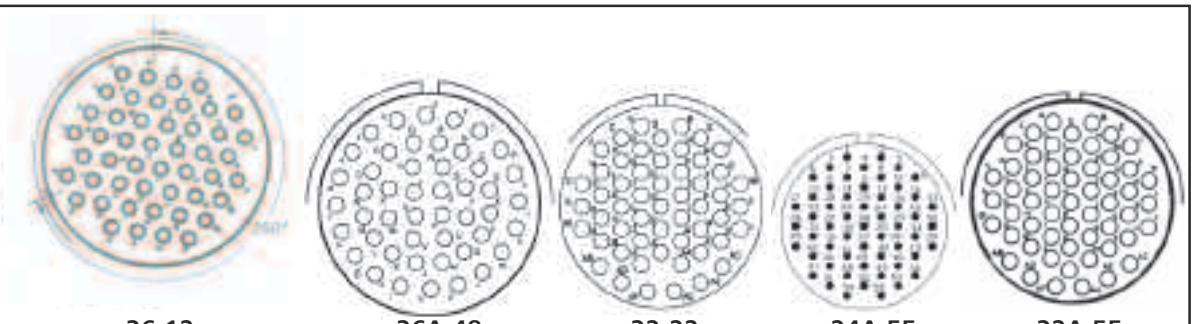

	36-12	36A-48	32-22	24A-55	32A-55
Insert Arrangement	36-12	36A-48	32-22	24A-55	32A-55
Number of Contacts	48	48	54	55	55
Size of Contacts	16	16	16	20	16
Service Rating	A (36-10 rotated by 250º)	I	A	I	A

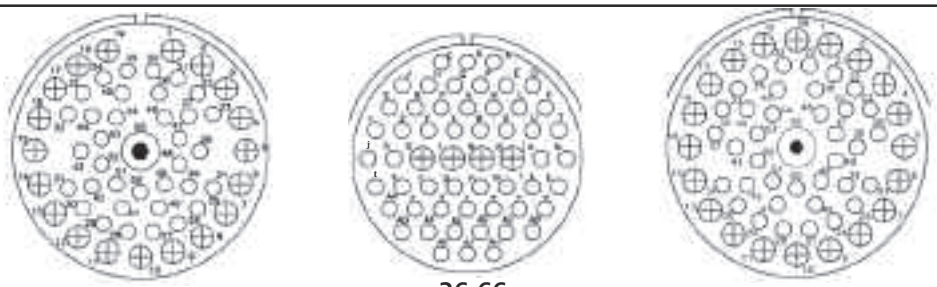

	40-55	36-66	40-58
Insert Arrangement	40-55	36-66	40-58
Number of Contacts	55	56	58
Size of Contacts	1-8, 19-12, 35-16	4-12, 52-16	1-8, 19-12, 38-16
Service Rating	I	A	I

Specifications and dimensions subject to change
Dimensions shown in mm.

Front View of Male Insert 60-159 Contacts

Contact Legend

20 18 16 16HV 12 12HV 8 4 0 4/0

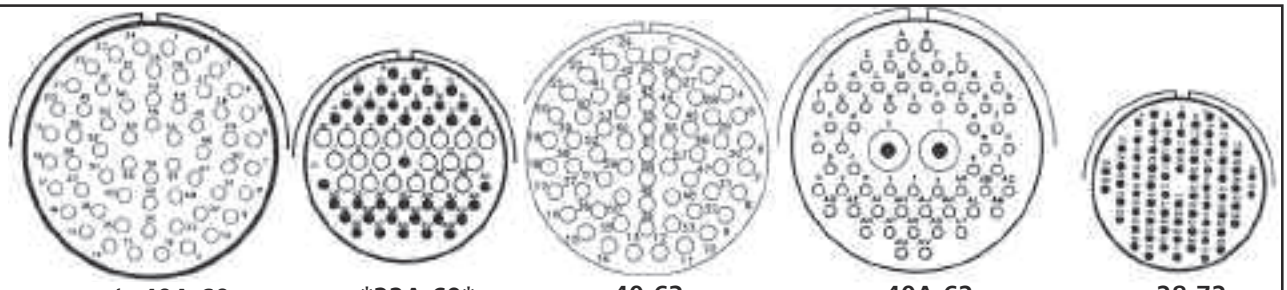

Insert Arrangement	**40A-60**	***32A-69***	**40-63**	**40A-62**	**28-72**
Number of Contacts	60	61	61	62	72
Size of Contacts	16	20-16, 41-20	16	60-16, 2-8	20
Service Rating	A	A	A	A	I

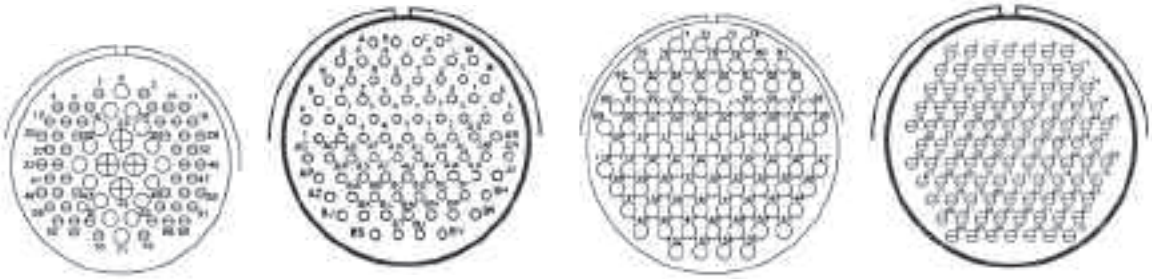

Insert Arrangement	**36A-72**	**40-56**	**40A-56**	**40A-100**
Number of Contacts	72	85	85	100
Size of Contacts	4-12, 16-16, 52-18	16	16	18
Service Rating	I	A	A	A

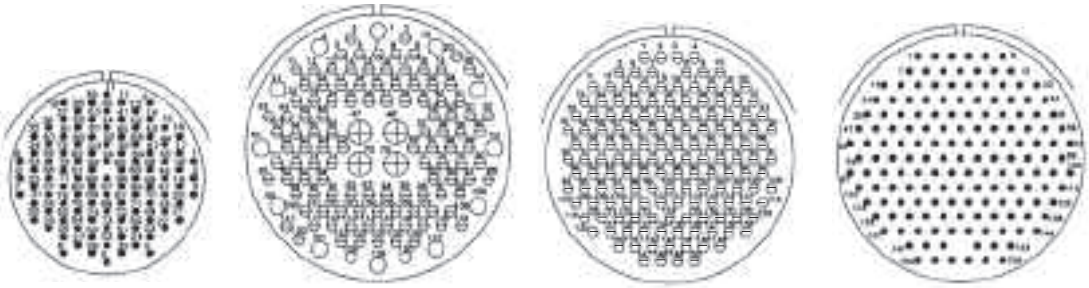

Insert Arrangement	**32-101**	**40A-130**	**40A-150**	**40T-159**
Number of Contacts	101	130	150	159
Size of Contacts	20	4-12, 12-16, 114-18	18	20
Service Rating	I	I	I	A

Thermocouple Material

Abbreviation	Fe	Co	Cu	CH	Al
Material	Iron	Constantan	Copper	Chromel	Alumel
Identification Colors	Black	Yellow	—	White	Green

Type	Similar to Type	Total Contacts	Contact Type		Pin Insert Rotation	Total Quantity - Type of Contact and Location*
			12	16		
10SL-51	10SL-4	2		2	45°	A=Fe; B=Co
10SL-52	10SL-4	2		2	45°	A=Cu; B=Co
10SL-53	10SL-4	2		2	45°	A=Al; B=CH
10SL-54	10SL-3	3		3	None	A=Fe, B=Co; C=Cu
10SL-55	10SL-3	3		3	None	A=Al; B=CH; C=Cu
10SL-56	10SL-4	2		2	None	A=Al; B=CH
14S-51	14S-9	2		2	90°	A=Al; B=CH
14S-52	14S-2	4		4	45°	A, B=Cu; C=Al; D=CH
14S-53	14S-9	2		2	90°	A=Fe; B=Co
14S-54	14S-6	6		6	45°	A, C, E=Fe; B, D, F=Co
14S-55	14S-2	4		4	45°	A, C=Fe; B, D=Co
14S-56	14S-2	4		4	45°	A=Fe; B=Co; C, D=Cu
14S-57	14S-2	4		4	45°	A, C=Al; B, D=CH
14S-58	14S-7	3		3	45°	A=Al, B=CH; C=Cu
14S-59	14S-9	2		2	90°	A=Cu; B=Co
14S-60	14S-9	2		2	none	A=Al; B=CH
14S-61	14S-6	6		6	45°	A=Al; B=CH; C=Fe; D=Co; E, F=Cu
14S-63	14S-6	6		6	None	A, C=Al; B, D=CH; E=Fe; F=Co
14S-64	14S-2	4		4	None	A, C=Co; B, D=Cu
14S-65	14S-6	6		6	None	A, C, E=Cu; B, D, F=Co

**We suggest these contact positions. Contacts are normally supplied loose, or they can be installed if requested, in any position.*

Thermocouple Material

Abbreviation	Fe	Co	Cu	CH	Al
Material	Iron	Constantan	Copper	Chromel	Alumel
Identification Colors	Black	Yellow	—	White	Green

Type	Similar to Type	Total Contacts	Contact Type		Pin Insert Rotation	Total Quantity - Type of Contact and Location*
			12	16		
14S-67	14S-6	6		6	None	A=Al; B=CH; Balance=Cu
14S-68	14S-2	4		4	45°	A=CH; B=Co; C, D=Cu
14S-69	14S-7	3		3	None	A=Co; B=CH; C=Cu
14S-70	14S-2	4		4	None	D=Al; A=CH; Balance=Cu (crimp type)
14S-71	14S-2	4		4	None	n. 2=CH; n. 2=Co
14S-72	14S-2	4		4	None	A, C=Fe; B, D=Co
14S-73	14S-2	4		4	None	A, C=CH; B-D=Al
14S-74	14S-2	4		4	None	A=Al; B=CH; Balance=Cu
14S-75						
14S-76						
14S-77	14S-6	6		6	None	A, B, C=Al; D, E, F=CH
14S-78	14S-2	4		4	None	A, B=Al; C, D=CH
14S-79	14S-5	5		5	None	n. 1=Al; n. 1=CH; Balance=Cu
14S-80	14S-7	3		3	None	n. 2=Fe; n. 1=Co
16-50						
16-51						
16-53	16-9	4	2	2	70°	A=Al; C=CH; B, D=Cu
16-55	16-10	3	3		45°	A=Al; C=CH; B, D=Cu
16-56	16-13	2	2		90°	A=Co; B=Cu
16-57	16-10	3	3		None	A=Al; B=Cu; C=CH

**We suggest these contact positions. Contacts are normally supplied loose, or they can be installed if requested, in any position.*

Thermocouple Material

Abbreviation	Fe	Co	Cu	CH	Al
Material	Iron	Constantan	Copper	Chromel	Alumel
Identification Colors	Black	Yellow	—	White	Green

Type	Similar to Type	Total Contacts	Contact Type		Pin Insert Rotation	Total Quantity - Type of Contact and Location*
			12	16		
16-58	16-10	3	3		None	A=Co; B-C=Cu
16-60	16-13	2	2		None	A=Al; B=CH
16-61						
16S-50	16S-8	5		5	None	n. 1=Co; n. 1=Fe; n. 3=Cu (crimp type)
16S-51	16S-1	7		7	None	A, F=Al; B=CH; Balance=Cu
16S-52	16S-4	2		2	None	A=CH; B=Al
16S-53	16S-5	3		3	None	A, B, C=Fe
16S-54	16S-1	7		7	None	A=Al; B=CH; Balance=Cu
16S-55	16S-4	2		2	None	n. 1=Co; n. 1=Cu
16S-56	16S-1	7		7	None	A-D=Fe; B-E=CO; Balance=Cu
16S-57	16S-5	3		3	None	n. 1=CH; n. 1=Al; 1=Cu
16S-58	16S-8	5		5	None	2=Fe; 2=Co; 1=Cu
16S-59	16S-1	7		7	None	3=Al; 3=CH; 1=Cu
16S-60						
18-40						
18-41	18-4	4		4	None	A, C=Fe; B, D=Co
18-42	18-4	4		4	None	A, C=Al; B, D=Cr
18-43	18-4	4		4	None	A, C=CH; B, D=Co
18-44	18-22	3		3	None	n. 1=Al; n. 1=CH; n.1=Cu
18-45	18-20	5		5	None	A=Fe; B=Co; Balance=Cu

**We suggest these contact positions. Contacts are normally supplied loose, or they can be installed if requested, in any position.*

Thermocouple Material

Abbreviation	Fe	Co	Cu	CH	Al
Material	Iron	Constantan	Copper	Chromel	Alumel
Identification Colors	Black	Yellow	—	White	Green

Type	Similar to Type	Total Contacts	Contact Type		Pin Insert Rotation	Total Quantity - Type of Contact and Location*
			12	16		
18-46	18-4	4		4	None	n. 1=CH; n. 1=Al; 2=Cu
18-47	18-4	4		4	None	A, C=CH; B, D=Al
18-49	18-1	10		10	None	n. 3=Fe; n. 3=Co; Balance=Cu
18-50	18-3	2	2		None	n. 1=Al; n. 1=CH
18-51	18-12	6		6	None	A-B=Fe; E-D=Co; C-F=Cu
18-52	18-11	5	5		None	A=Fe; B=Co; C=CH; D=Al; E=Cu
18-53	18-12	6		6	None	A, D=Fe; B, E=Co; C, F=Cu
18-54	18-15	4	4		None	A, C=Al; B, D=CH
18-56	18-1	10		10	45°	A, C, E, G, I=Fe; B, D, F, H, J=Co
18-57	18-12	6		6	45°	A, C, E=Al; B, D, F=CH
18-59	18-12	6		6	45°	A, C=Fe; B, E, F=Co; D=Cu
18-60	18-11	5	5		45°	A, D=Al; B, C=CH; E=Cu
18-61	18-12	6		6	None	A, C=Fe; B, D=Co; E=CH; F=Al
18-62	18-12	6		6	None	A, B, C=Fe; D, E, F=Co
18-63	18-15	4	4		None	A, C=Co; B, D=Cu
18-65	18-12	6		6	None	A=Fe; B=Co; Balance=Cu
18-66	18-1	10		10	None	A, C, E, G, I=Cu; B, D, F, H, J=Co
18-67	18-12	6		6	None	A, C, E=Cu; B, D, F=Co
18-68	18-11	5	5		None	A, D=Al; B, C=CH; E=Cu
18-69	18-1	10		10	None	A=Al; B=CH; Balance=Cu

**We suggest these contact positions. Contacts are normally supplied loose, or they can be installed if requested, in any position.*

Thermocouple Material

Abbreviation	Fe	Co	Cu	CH	Al
Material	Iron	Constantan	Copper	Chromel	Alumel
Identification Colors	Black	Yellow	—	White	Green

Type	Similar to Type	Total Contacts	Contact Type		Pin Insert Rotation	Total Quantity - Type of Contact and Location*
			12	16		
18-70	18-11	5	5		None	A=Fe; B=Co; C=CH; D-Al; E=Cu
18-71	18-12	6		6	None	n. 2=Al; n. 2=CH; n. 2=Cu
18-72	18-10	4	4		45°	n. 2=Fe; 2=Co
18-73	18-10	4	4		None	n. 2=Fe; n. 2=Co
18-74	18-10	4	4		None	n. 2=Co; n. 2=Cu
18-75	18-1	10		10	None	n. 2=Al; n. 2=CH; Balance=Cu (crimp type)
20-50	20-29	17		17	None	n. 7=Al; n.7=CH; n. 3=Cu
20-51	20-7	8		8	None	A, C, E, G=CH; B, D, F, H=Al
20-52	20-4	4	4		315°	A=Fe; B=Co; C=CH; D=Al
20-56	20-7	8		8	45°	A, B, G, H=Fe; C, D, E, F=Co
20-60	20-7	8		8	45°	D=CH; E=Al; Balance=Cu
20-61	20-29	17		17	45°	A, B, M=Cu; Balance=Co
20-62	20-15	7	7		80°	A, C, E=Al; B, D, F=CH; G=Cu
20-64	20-27	14		14	None	A=Al; C=CH; Balance=Cu
20-641	20-27	14		14	None	A, B, C, D, E, F, G=Al; H, I, J, K, L, M, N=CH
20-65	20-27	14		14	None	A, B, C, D, E, F, G=Fe; H, I, J, K, L, M, N=Co
20-67	20-16	9	2	7	None	H=Al; I=CH; Balance=Cu
20-68	20-7	8		8	None	A, B, G, H=Co; C, D, E, F=Cu
20-69	20-27	14		14	None	A, B, C, D, E, F, G=Cu; H, I, J, K, L, M, N=Co

**We suggest these contact positions. Contacts are normally supplied loose, or they can be installed if requested, in any position.*

Thermocouple Material

Abbreviation	Fe	Co	Cu	CH	Al
Material	Iron	Constantan	Copper	Chromel	Alumel
Identification Colors	Black	Yellow	—	White	Green

Type	Similar to Type	Total Contacts	Contact Type		Pin Insert Rotation	Total Quantity - Type of Contact and Location*
			12	16		
20-70	20-29	17		17	None	A, C, E, G, J, L, N, R, T=Fe; B, D, F, H, K, M, P, S=Co
20-71	20-29	17		17	None	S=Al; R=CH; Balance=Cu
20-74	20-29	17		17	None	A, C, E, G, J, L, N, R=Fe; B, D, F, H, K, M, P, S=Co; T=Cu
20-75	20-27	14		14	None	A, L, E=Al; B, F, M=CH; Balance=Cu
20-76	20-29	17		17	None	n. 8=CH; 8=Al; n. 1=Cu
20-77	20A-9	9		9	None	n. 3=Al; n.3=CH; n. 3=Ph Bz ∅
20-78	20-4	4	4		None	A=Fe; B=Co; Balance=Cu
20-80	20-3	3	3		None	A=Al; C=CH; B=Cu
20-81	20-21	9	1	8	None	n. 4=Al; n. 4=CH; n. 1 size 12=Cu
20-82	20-27	14		14	None	n. 4=Al; n. 10=Cu
20-83	20-27	14		14	None	A, B=Cr; C, D=Al; Balance=Cu
20-84	20-22	6	3 size 8	3	None	B=Al; D=CH; Balance=Cu
20-85	20-27	14		14	None	n. 12=CH; n. 1=Al; n. 1=Cu (All Crimp Type)
20-86	20-27	14		14	None	n. 2=Al; n. 12=CH
20-222	20-22	6	3 size 8	3	None	B=Fe; D=Co; Balance=Cu
22-57	22-14	19		19	45°	A, C, E, G, J, L, N, R=Fe; B, D, F, H, K, M, P, S=Co; T, U, V=Cu
22-60	22-14	19		19	45°	U=Al; N=CH; Balance=Cu
22-62	22-23	8	8		300°	A, B, F, G=Al; C, D, E, H=CH
22-68	22-19	14		14	45°	A, C, E, G, J, L, M=Fe; B, D, F, H, K, P, N=Co

**We suggest these contact positions. Contacts are normally supplied loose, or they can be installed if requested, in any position.*
∆ Ph Bz = Phosphor Bronze

Thermocouple Material

Abbreviation	Fe	Co	Cu	CH	Al
Material	Iron	Constantan	Copper	Chromel	Alumel
Identification Colors	Black	Yellow	—	White	Green

Type	Similar to Type	Total Contacts	Contact Type		Pin Insert Rotation	Total Quantity - Type of Contact and Location*
			12	16		
22-69	22-19	14		14	45°	A, C, E, G, J, L, M=Cu; B, D, F, H, K, P, N=Co
22-71	22-14	19		19	None	V=Al; U=CH; Balance=Cu
22-72	22-5	6	2	4	None	B=Al; E=CH; Balance=Cu
22-73	22-5	6	2	4	None	E=Al; B=CH; Balance=Cu
22-74	22-23	8	8		None	A, C, E, G=Fe; B, D, F, H=Co
22-75	22-23	8	8		None	A=Al; B, D, G, H=Cu; C=CH; E=Fe; F=Co
22-77	22-19	14		14	None	B, D, F, H, J, K, M, P=Cu; A, E, L=Fe; C, G, N=Co
22-78	22-14	19		19	None	A, C, E, G, H, K, M, P, R, T=Co; Balance=Cu
22-79	22-10	4		4	None	A, C=Co; B, D=Cu
22-81	22-34	5	3	2	None	E=Fe; D=Co; Balance=Cu
22-82	22-14	19		19	None	A, L, C, E, G, J=Fe; B, M, D, F, H, K=Co; N, U, P, R, S, T=Cu; V=Closed
22-83	22-14	19		19	None	A, L, C, E, G, J=Al; B, M, D, F, H, K=CH; N, U, P, R, S, T=Cu; V=Closed
22-84						
22-85	22-5	6	2	4	None	n. 2=Al; n. 2=CH; Balance=Cu;
22-86						
24-56	24-20	11	2	9	45°	E=Al; F=CH; Balance=Cu
24-57	24-28	24		24	45°	A, C, J, V, Y, W, K, E, H, U, S, M=CH; Balance=Al
24-62	24-48	24		24	None	A, C, E, G=Fe, B, D, F, H=Co; R, T=CH; S, U=Al; Balance=Cu

**We suggest these contact positions. Contacts are normally supplied loose, or they can be installed if requested, in any position.*

Thermocouple Material

Abbreviation	Fe	Co	Cu	CH	Al
Material	Iron	Constantan	Copper	Chromel	Alumel
Identification Colors	Black	Yellow	—	White	Green

Type	Similar to Type	Total Contacts	Contact Type		Pin Insert Rotation	Total Quantity - Type of Contact and Location*
			12	16		
24-63	24-28	24		24	None	A, C, E, G, J, L, K, N, S, U, W, Y=Cu B, D, F, H, Q, R, M, P, T, V, X, Z=Co
24-64	24-5	16		16	None	A, B, C, D, E, F, G, H=Fe; J, K, L, M, N, P, R, S=Co
24-68	24-28	24		24	None	D=Co; Balance=Cu
24-69	24-19	12		12	None	n. 5=Co; n. 7=Cu
24-70	24-28	24		24	None	n. 8=CH; n. 8=Al; n. 8=Ph Bz ∅
24-412	24-19	12		12	None	n. 6=Cu; n. 6=Co
24-621	24-28	24		24	None	A, C, E, G, J, L, K, N, S, U, W, Y=Fe B, D, F, H, Q, R, M, P, T, V, X, Z=Co
24-622	24-28	24		24	None	A, C, E, G, J, L, K, N, S, U, W, Y=CH B, D, F, H, Q, R, M, P, T, V, X, Z=Al
24-71	24-5	16		16	None	A, B, C, D, E, F, G, H=Al; J, K, L, M, N, P, R, S=CH
28-53	28-11	22	4	18	45°	J, L=Al; K, M=CH; Balance=Cu
28-58	28-20	14	10	4	45°	A, C, E, G, K, M=Al; B, D, F, H, L, N=CH; J, P=Cu
28-61	28-21	37		37	45°	A, C, J, Z, m, r, n, a, K, F, H, X, k, h, T, M, N, d=Fe; Balance=Cu
28-63	28-20	14	10	4	315°	A, C, E, G, J=Al; B, D, F, H, P=Cr; Balance=Cu
28-64	28-15	35		35	None	A, d=Al; B, j=CH; C, D, E, F, G, N, P, R, S, H, J, K, L, N, W, X, Y, Z=Co; Balance=Cu
28-65	28-12	26		26	None	A, C, E, G, J, L, N, R, T, V=Fe; X, Z=Al; B, D, F, H, K, M, P, S, U, W=Co; Y, a=CH; b, d=Cu
28-66	28-16	20		20	None	n. 10=Co; n. 10=Cu

**We suggest these contact positions. Contacts are normally supplied loose, or they can be installed if requested, in any position.*
∆ Ph Bz = Phosphor Bronze

Thermocouple Material

Abbreviation	Fe	Co	Cu	CH	Al
Material	Iron	Constantan	Copper	Chromel	Alumel
Identification Colors	Black	Yellow	—	White	Green

Type	Similar to Type	Total Contacts	Contact Type		Pin Insert Rotation	Total Quantity - Type of Contact and Location*
			12	16		
28-67	28-16	20		20	None	U=Co; Balance=Cu
28-68	28-15	35		35	45°	T=Al; U=CH; Balance=Cu
28-69	28-11	22	4	18	None	G=Al; R=CH; Balance=Cu
28-70	28-11	22	4	18	None	A=Al; B=CH; Balance=Cu
28-77	28-16	20		20	None	n. 6=Fe; n. 6=Co; Balance=Cu
28-78	28-15	35		35	None	A, B=CH; C, D=Al; Balance=Cu
28-80	28-16	20		20	None	n. 10=Fe; n. 10=Co
28-81	28-15	35		35	None	n. 10=Al; n. 10=CH; Balance=Cu
28-82	28-15	35		35	None	n. 12=Fe; n. 12=Co; Balance=Cu
28-83						
28-201	28-20	14	10	4	None	A, C, E, G, J, P=Co; Balance=Cu
28-811	28-15	35		35	None	n. 17=CH; n. 17=Al; n. 1=Closed
32-50	32-8	30	6	24	None	M=CH; N=Al; Balance=Cu
32-51	32-8	30	6	24	90°	M=CH; N=Al; Balance=Cu
32-55	32-8	30	6	24	125°	M, N=CH; O, P=Al; Balance=Cu
32-56						
32A-401	32A-40	40		40	None	n. 13=Al; n. 13=CH; n. 14=Cu
36-101	36-10	48		48	None	n. 24=Al; n. 24-CH

**We suggest these contact positions. Contacts are normally supplied loose, or they can be installed if requested, in any position.*

Thermocouple Material

Abbreviation	Fe	Co	Cu	CH	Al
Material	Iron	Constantan	Copper	Chromel	Alumel
Identification Colors	Black	Yellow	—	White	Green

Type	Similar to Type	Total Contacts	Contact Type		Pin Insert Rotation	Total Quantity - Type of Contact and Location*
			12	16		
36-102	36-10	48		48	None	n. 24=CH; n. 24=Co
36-53	36-7	47	7	40	45°	U, V, W=Al; XYZ=CH; Balance=Cu
36-56	36-10	48		48	None	A, C, E, G, L, J, H, P, R, T, V, X, Z, b, d, f, g, k, q, n, m, u, w, y=Co; Balance=Cu
36-57	36-8	47	1	46	None	W=Al; F=CH; Balance=Cu
36-58	36-15	35		35	None	H=Al; G=CH; Balance=Cu
36-61	36-15	35		35	None	A, C, E, J, K, L, M, N, P, R, T, V, f, X, Y, h, j, c=Co; Balance=Cu
36-62	36-10	48		48	None	A, C, E=Al; B, D, F=CH; Balance=Cu
36-63	36-10	48		48	None	n. 16=Al; n. 16=CH; n. 16=Cu
36-64	36-10	48		48	None	n. 24=Fe; n. 24=Co
36-65						
40-58	40A-31	31	31		None	n. 15=Al; n. 16=CH
40-59						
40-77						
40-78						

**We suggest these contact positions. Contacts are normally supplied loose, or they can be installed if requested, in any position.*

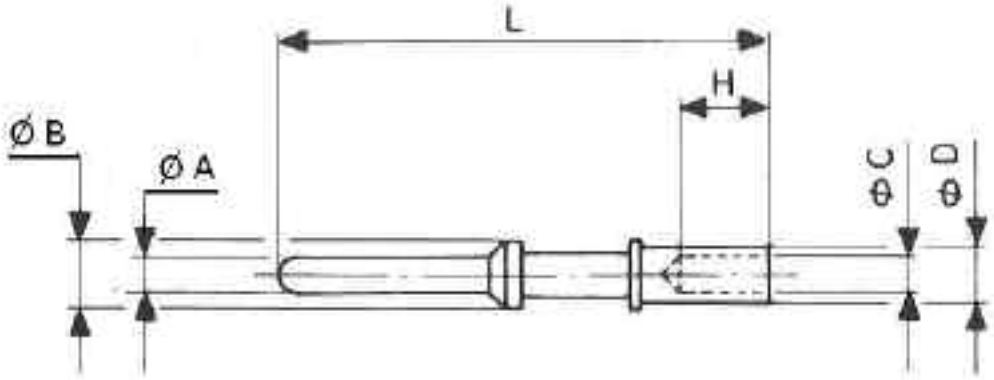

VEAM Part Number	Contact Size		Wire Section		ØA	ØB	ØC	ØD	H	L
	CR Metr.	CR1 AWG	mm²	AWG						
45450	10	—	0,75 / 1	—	1,04	2	1,5	2,4	4,6	28,4
45451	15S*	16S*	1 / 1,5	16	1,6	3,2	1,75	2,75	6,8	27,4
45453	15*	16*	1 / 1,5	16	1,6	3,2	1,75	2,75	6,8	31,4
45454	25*	12*	2,5	12	2,4	4,8	2,5	3,8	6,8	37
45455-38	60	—	6	—	3,6	7,6	3,5	6,8	12	39,6
45455-10	100	—	10	—	3,6	7,6	4,8	6,8	12	39,6
45455/AWG	—	8	—	8	3,6	7,6	4,55	6,8	12	39,6
45456	160	—	16	—	5,75	11,2	6,2	9,55	12	39,6
45456/AWG	—	4	—	4	5,75	11,2	7,1	9,55	12	39,6
45457	500	—	50	—	9,1	15,15	10,7	14,35	14	41
45457/AWG	—	0	—	0	9,1	15,15	11,5	14,35	14	41

Note: please consult the "CIR Series Assembly Guide" for assembly instructions and accessories.
** 16S-16 and 12 sizes contacts are unified to 15S-15-25 sizes.*

Contact Dimensions - Female CR-CR1 Style Crimp

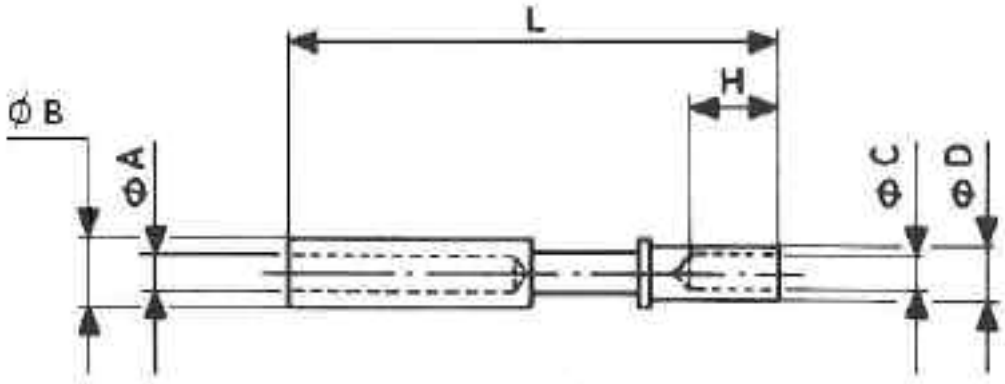

VEAM Part Number	Contact Size		Wire Section		ØA	ØB	ØC	ØD	H	L
	CR Metr.	CR1 AWG	mm²	AWG						
45470	10	—	0,75 / 1	—	1,07	2,6	1,5	2,4	4,6	36,8
45471	15S*	16S*	1 / 1,5	16	1,65	3,2	1,75	2,75	6,8	29,1
45473	15*	16*	1 / 1,5	16	1,65	3,2	1,75	2,75	6,8	37,8
45474	25*	12*	2,5	12	2,45	4,8	2,5	3,8	6,8	37
45475-38	60	—	6	—	3,65	7,6	3,5	6,8	12	40,1
45475-10	100	—	10	—	3,65	7,6	4,8	6,8	12	40,1
45475/AWG	—	8	—	8	3,65	7,6	4,55	6,8	12	40,1
45476	160	—	16	—	5,8	11,2	6,2	9,55	12	40,1
45476/AWG	—	4	—	4	5,8	11,2	7,1	9,55	12	40,1
45477	500	—	50	—	9,15	15,15	10,7	14,35	14	41,6
45477/AWG	—	0	—	0	9,15	15,15	11,5	14,35	14	41,6

Note: please consult the "CIR Series Assembly Guide" for assembly instructions and accessories.
** 16S-16 and 12 sizes contacts are unified to 15S-15-25 sizes.*

Contact Arrangements	Number of Contacts	CR DIN Type	CR1 AWG Type	Service Rating
10SL-3	3	15S	16S	A
10SL-4	2	15S	16S	A
14S-2	4	15S	16S	I
14S-5	5	15S	16S	I
14S-6	6	15S	16S	I
14S-7	3	15S	16S	A
16S-1	7	15S	16S	A
16S-4	2	15S	16S	D
16S-18	7 (16S-1 Rotated by 100°)	15S	16S	A
16-10	3	25	12	A
16-11	2	25	12	A
16-12	1	160	4	A
18-1	10	15	16	A: (B, C, F, G) I: (all other)
18-11	5	25	12	A
20-2	1	500	0	D
20-8	4 2	15 100	16 8	I
20-15	7	25	12	A
20-27	14	15	16	A
20-29	17	15	16	A
20-33	11	15	16	A
20A-8	6 2	15 100	16 8	I
20A-9	9	25	12	D: (J) I: (all other)
20A-48	19	15	16	I
22-2	3	60	8	D
22-7	1	500	0	E
22-12	3 2	15 100	16 8	D
22-14	19	15	16	A
22-19	14	15	16	A
22-22	4	100	8	A
22B-22	4	60	8	A
22-23	8	25	12	D: (H) A: (all other)
22D-23	7-12 1-spec	25	12	A
22-27	8 1	15 60	16 8	D: (J) A: (all other)

Contact Arrangements	Number of Contacts	CR DIN Type	CR1 AWG Type	Service Rating
24-10	7	100	8	A
24-11	6 3	25 100	12 8	A
24-12	3 2	25 160	12 4	A
24-28	24	15	16	I
28-11	18 4	15 25	16 12	A
28-21	37	15	16	A
28-22	3 3	160 15	4 16	D
28A-63	19 9	15 25	16 12	A: (e) I: (all other)
32-1	3 2	25 500	12 0	E: (A) D: (all other)
32-5	2	500	0	D
32-6	16 2 3 2	15 25 60 160	16 12 8 4	A
32-7	28 7	15 25	16 12	I: (A, B, h, j) A: (all other)
32A-69	41 20	10 15	20 16	I
36-3	3 3	500 25	0 12	D
36-5	4	500	0	A
36-10	48	15	16	A

Specifications and dimensions subject to change
Dimensions shown in mm.

Insert Rotations - Alternate Positions CR-CR1

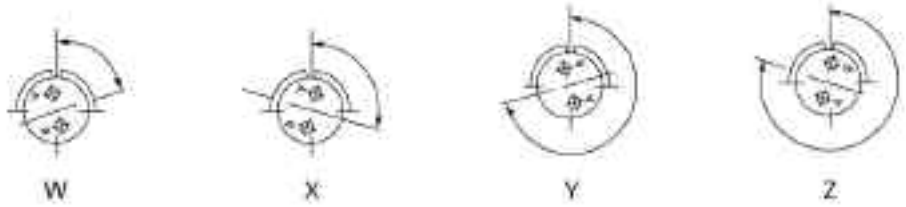

Alternate Positions of Insert Arrangements (Key Stationary - Insert Rotated)

Front View of Pin Insert

Insert Type	Degrees for Alternate Positions			
	W	X	Y	Z
14S-2	—	120	240	—
14S-5	—	110	—	—
14S-6	90	—	—	—
14S-7	90	180	270	—
16S-1	80	—	—	280
16S-4	35	110	250	325
16-10	90	180	270	—
16-11	35	110	250	325
18-1	70	145	215	290
18-11	—	170	265	—
20-8	80	110	250	280
20-15	80	—	—	280
20-27	35	110	250	325
20-29	80	—	—	280
20-33	—	—	—	280
20A-9	—	110	250	—
20A-48	—	80	280	—
22-2	70	145	215	290
22-12	80	110	250	280
22-14	80	—	—	280
22-19	80	110	250	280
22-22	—	110	250	—
22B-22	—	110	250	—
22-23	35	—	250	—
22D-23	35	—	250	—
22-27	80	—	250	280

Insert Type	Degrees for Alternate Positions			
	W	X	Y	Z
24-10	80	—	—	280
24-11	35	110	250	325
24-12	80	110	250	280
24-28	80	110	250	280
28-11	80	110	250	280
28-20	80	110	250	280
28-21	80	110	250	280
28-22	70	145	215	290
28A-63	—	100	260	—
32-1	80	110	250	280
32-5	80	110	250	325
32-6	80	110	250	280
32-7	80	125	235	280
32A-69	—	110	250	—
36-3	70	145	215	290
36-5	—	120	240	—
36-10	80	125	235	280

Contact Legend

20	18	16	12	8	4	0	4/0

Insert Arrangements	**16-12**	**20-2**	**22-7**
Number of Contacts	1	1	1
Contact Size DIN	160	500	500
AWG	4	0	0
Service Rating	A	D	E

Insert Arrangements	**10SL-4**	**16S-4**	**16-11**	**32-5**
Number of Contacts	2	2	2	2
Contact Size DIN	15S	15S	25	500
AWG	16S	16S	12	0
Service Rating	A	D	A	D

Insert Arrangements	**10SL-3**	**14S-7**	**16-10**	**22-2**
Number of Contacts	3	3	3	3
Contact Size DIN	15S	15S	25	60
AWG	16S	16S	12	8
Service Rating	A	A	A	D

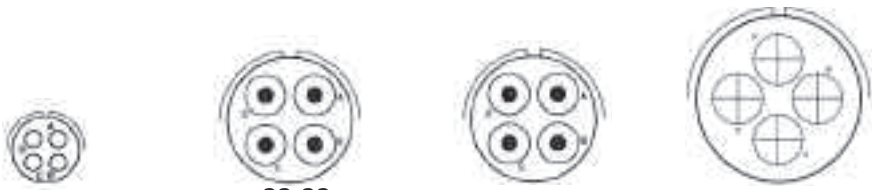

Insert Arrangements	**14S-2**	**22-22**	**22B-22**	**36-5**
Number of Contacts	4	4	4	4
Contact Size DIN	15S	100	60	500
AWG	16S	8 (10 mm²)	8 (6 mm²)	0
Service Rating	1	A	A	A

Specifications and dimensions subject to change
Dimensions shown in mm.

Contact Legend

20	18	16	12	8	4	0	4/0

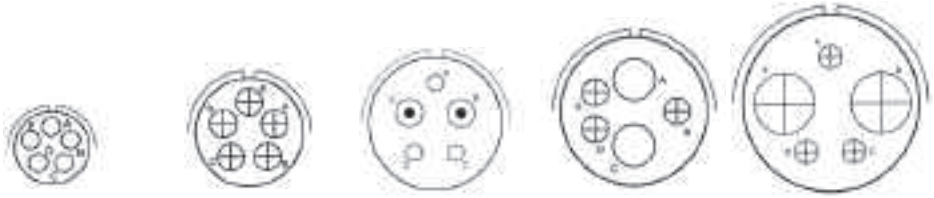

Insert Arrangements		14S-5	18-11	22-12	24-12	32-1
Number of Contacts		5	5	5	5	5
Contact Size	DIN	15S	25	2-100; 3-15	2-160; 3-25	2-500; 3-25
	AWG	16S	12	2-8; 3-16	2-4; 3-12	2-0; 3-12
Service Rating		I	A	D	A	A=E; B, C, D, E=D

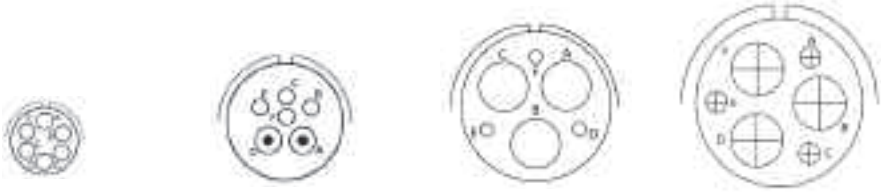

Insert Arrangements		14S-6	20-8	28-22	36-3
Number of Contacts		6	6	6	6
Contact Size	DIN	15S	2-100; 4-15	3-160; 3-15	3-500; 3-25
	AWG	16	2-8; 4-16	3-4; 3-16	3-0; 3-12
Service Rating		I	I	D	D

Insert Arrangements		16S-1	16S-18 16S-1rotated by 100°	20-15	24-10
Number of Contacts		7	7	7	7
Contact Size	DIN	15S	15S	25	100
	AWG	16S	16S	12	8 (10 mm²)
Service Rating		A	A	A	A

Insert Arrangements		20A-8	22D-23	22-23
Number of Contacts		8	8	8
Contact Size	DIN	6-15; 2-100	7-25; 1 spec.	25
	AWG	6-16; 2-8	7-12; 1 spec.	12
Service Rating		I	A (with rear protection)	H=D BALANCE=A

Contact Legend

20 18 16 12 8 4 0 4/0

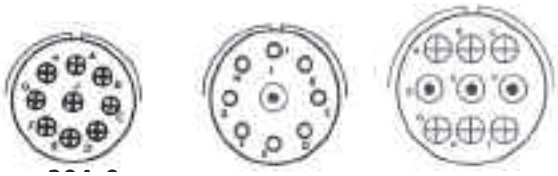

Insert Arrangements	20A-9	22-27	24-11
Number of Contacts	9	9	9
Contact Size	DIN 25	1-60; 8-15; 1-8;	3-100; 6-25
	AWG 12	8-16	3-8; 6-12
Service Rating	J=D; BALANCE=I	J=D BALANCE=I	A

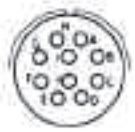

Insert Arrangements	18-1
Number of Contacts	10
Contact Size	DIN 15
	AWG 16
Service Rating	B, C, F, G=A BALANCE=I

Insert Arrangements	20-33
Number of Contacts	11
Contact Size	DIN 15
	AWG 16
Service Rating	A

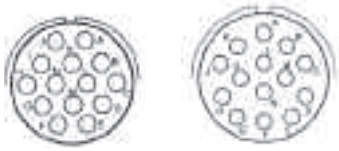

Insert Arrangements	20-27	22-19
Number of Contacts	14	14
Contact Size	DIN 15	15
	AWG 16	16
Service Rating	A	A

Specifications and dimensions subject to change
Dimensions shown in mm.

Contact Legend

20 18 16 12 8 4 0 4/0

Insert Arrangements		20-29
Number of Contacts		17
Contact Size	DIN	15
	AWG	16
Service Rating		A

Insert Arrangements		20A-48	22-14
Number of Contacts		19	19
Contact Size	DIN	15	15
	AWG	16	16
Service Rating		I	A

Insert Arrangements		28-11
Number of Contacts		22
Contact Size	DIN	4-25; 18-15
	AWG	4-12; 18-16
Service Rating		A

Insert Arrangements		32-6
Number of Contacts		23
Contact Size	DIN / AWG	2-160; 3-60; 2-25; 16-15 / 2-4; 3-8; 2-12; 16-16
Service Rating		A

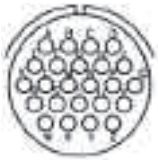

Insert Arrangements		24-28
Number of Contacts		24
Contact Size	DIN	15
	AWG	16
Service Rating		I

Contact Legend

20 18 16 12 8 4 0 4/0

Insert Arrangements		28A-63
Number of Contacts		28
Contact Size	DIN	9-25; 19-15
	AWG	9-12; 19-16
Service Rating		e=A BALANCE=I

Insert Arrangements		32-7
Number of Contacts		35
Contact Size	DIN	7-25; 28-15
	AWG	7-12; 28-16
Service Rating		A, B, h, J=I BALANCE=A

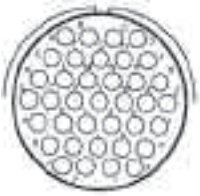

Insert Arrangements		28-21
Number of Contacts		37
Contact Size	DIN	15
	AWG	16
Service Rating		A

Insert Arrangements		36-10
Number of Contacts		48
Contact Size	DIN	15
	AWG	16
Service Rating		A

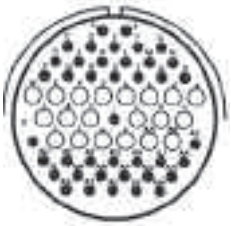

Insert Arrangements		32A-69
Number of Contacts		61
Contact Size	DIN	20-15; 41-10
	AWG	30-16; 41-20
Service Rating		I

Specifications and dimensions subject to change
Dimensions shown in mm.

Seating dimensions CIR connectors: SOCKETS

Notes:

1 FOR SIZES 10SL &16S YM - .142[3.6]
FOR YM4 VERSION - .078[2.0]
FOR YML VERSION - .201[5.11]

2 TO OBTAIN THE DIMENSION VALUE, SUBTRACT A FROM B.

3 CONSULT CUSTOMER SERVICE DEPARTMENT FOR PCB THICKNESS OTHER THAN SPECIFIED.

4 CONSULT CUSTOMER SERVICE DEPARTMENT FOR CONTACTS USED IN RECEPTACLES FOR STAND OFF MOUNTING.

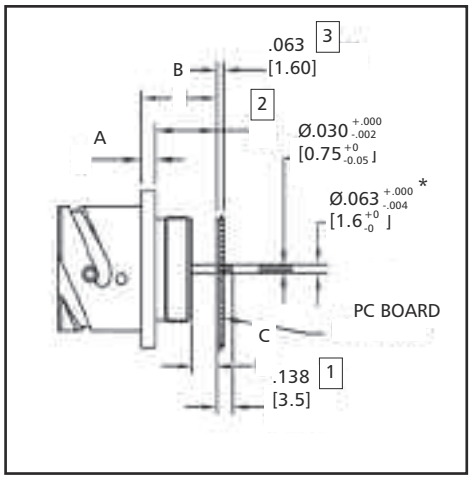

* Or .079 Check with customer service

SHELL SIZE		CIR020		CONTACT	CLASS
	A	B	C	SOCKET	
	±0.2 ± .008	±0.5 ± .020	±0.5 ± .020	[note 4]	
	mm inch	mm inch	mm inch		
10 SL	2.79	15.42	4.93	47187-16S	YM
	.110	.607	.194		
	TBD	TBD	TBD	TBD	YM4
14 S	3.20	15.29	4.93	47187-16S	YM
	.126	.602	.194		
	TBD	TBD	TBD	TBD	YM4
16 S	3.20	15.26	4.93	47187-16S	YM
	.126	.601	.194		
	TBD	TBD	TBD	TBD	YM4
16	3.20	20.09	5.28	47187-161	YM
	.126	.791	.208		
	3.20	21.61	6.80	47187-162	YM1
	.126	.851	.268		
18	3.98	19.96	5.28	47187-161	YM
	.157	.786	.208		
	3.98	21.49	6.80	47187-162	YM1
	.157	.846	.268		
20	3.98	19.96	5.28	47187-161	YM
	.157	.786	.208		
	3.98	21.49	6.80	47187-162	YM1
	.157	.846	.268		
22	3.98	20.01	5.28	47187-161	YM
	.157	.788	.208		
	3.98	21.54	6.80	47187-162	YM1
	.157	.848	.268		
24	3.98	20.01	3.38	47187-161	YM2
	.157	.788	.133		
	3.98	21.54	4.90	47187-162	YM
	.157	.848	.193		
28	3.98	20.01	3.38	47187-161	YM2
	.157	.788	.133		
	3.98	21.54	4.90	47187-162	YM
	.157	.848	.193		
	3.98	21.54	4.90	47187-162	YML
	.157	.848	.193		
32	3.98	16.89	1.78	47187-161	YM3
	.157	.665	.070		
	3.98	18.41	3.30	47187-162	YM2
	.157	.725	.130		
36	3.98	16.89	1.78	47187-161	YM3
	.157	.665	.070		
	3.98	18.41	3.30	47187-162	YM2
	.157	.725	.130		
40	3.98	16.89	1.78	47187-161	YM3
	.157	.665	.070		
	3.98	18.41	3.30	47187-162	YM2
	.157	.725	.130		

Seating dimensions CIR connectors: SOCKETS

Notes:

1 For sizes 10SL &16S YM - .142[3.6]
For YM4 Version - .078[2.0]
For YML Version - .201[5.11]

2 To obtain the dimension value, subtract A from B.

3 Consult Customer Service Department for PCB thickness other than specified.

4 Consult Customer Service Department for contacts used in receptacles for stand off mounting.

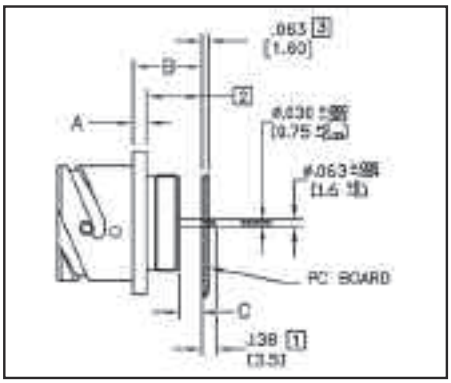

* Or .079 Check with customer service

SHELL SIZE		CIR 030			CIR 07		CONTACT	CLASS
	A	B	C	A	B	C	SOCKET	
	± 0.2 ± .008	±0.5 ± .020	±0.5 ± .020	± 0.2 ± .008	±0.5 ± .020	±0.5 ± .020	[note 4]	
	mm / inch	mm / inch	mm / inch	mm / inch	mm / inch	mm / inch		
10 SL	2.79	11.38	1.98	N/A	N/A	N/A	47187-16S	YM
	.110	.448	.078					
	2.79	16.55	7.15	N/A	N/A	N/A	47187L-16S	YM2
	.110	.652	.281					
	TBD	TBD	TBD	TBD	TBD	TBD	TBD	YM4
14 S	3.2	11.38	1.98	N/A	N/A	N/A	47187-16S	YM
	.126	.448	.078					
	3.2	16.55	7.15	N/A	N/A	N/A	47187L-16S	YM2
	.126	.652	.281					
	TBD	TBD	TBD	TBD	TBD	TBD	TBD	YM4
16 S	3.2	11.38	1.98	N/A	N/A	N/A	47187-16S	YM
	.126	.448	.078					
	3.2	16.5	7.15	N/A	N/A	N/A	47187L-16S	YM2
	.126	.652	.281					
	TBD	TBD	TBD	TBD	TBD	TBD	TBD	YM4
16	3.2	15.98	5.2	4.8	6.9	2.11	47187-161	YM
	.126	.629	.205	.189	.272	.083		
	3.2	17.55	6.8	4.8	8.51	3.71	47187-162	YM1
	.126	.691	.268	.189	.335	.146		
18	3.98	15.98	5.2	4.8	5.31	0.51	47187-161	YM
	.157	.629	.205	.189	.209	.020		
	3.98	17.55	6.8	4.8	6.86	2.06	47187-162	YM1
	.157	.691	.268	.189	.270	.081		
20	3.98	15.98	5.2	4.8	5.31	0.51	47187-161	YM
	.157	.629	.205	.189	.209	.020		
	3.98	17.55	6.8	4.8	6.86	2.06	47187-162	YM1
	.157	.691	.268	.189	.270	.081		
22	3.98	15.98	5.2	4.8	5.31	0.51	47187-161	YM
	.157	.629	.205	.189	.209	.020		
	3.98	17.55	6.8	4.8	6.86	2.06	47187-162	YM1
	.157	.691	.268	.189	.270	.081		
24	3.98	15.98	5.2	4.8	5.31	0.51	47187-161	YM2
	.157	.629	.205	.189	.209	.020		
	3.98	17.55	6.8	4.8	6.86	2.06	47187-162	YM
	.157	.691	.268	.189	.270	.081		
28	3.98	14.96	3.30	N/A	N/A	N/A	47187-161	YM2
	.157	.589	.130					
	3.98	16.56	4.9	N/A	N/A	N/A	47187-162	YM
	.157	.652	.193					
	3.98	16.56	4.9	N/A	N/A	N/A	47187L-162	YML
	.157	.652	.193					
32	3.98	14.96	1.70	N/A	N/A	N/A	47187-161	YM3
	.157	.589	.067					
	3.98	16.56	3.30	N/A	N/A	N/A	47187-162	YM2
	.157	.652	.130					
36	3.98	14.96	1.70	N/A	N/A	N/A	47187-161	YM3
	.157	.589	.067					
	3.98	16.56	3.30	N/A	N/A	N/A	47187-162	YM2
	.157	.652	.130					
40	3.98	14.96	1.70	N/A	N/A	N/A	47187-161	YM3
	.157	.589	.067					
	3.98	16.56	3.30	N/A	N/A	N/A	47187-162	YM2
	.157	.652	.130					

Specifications and dimensions subject to change
Dimensions shown in mm.

Seating dimensions CIR connectors: PINS

Notes:

1 For sizes 10SL &16S YM - .142[3.6]
For YM4 Version - .078[2.0]
For YML Version - .201[5.11]

2 To obtain the dimension value, subtract A from B.

3 Consult Customer Service Department for PCB thickness other than specified.

4 Consult Customer Service Department for contacts used in receptacles for stand off mounting.

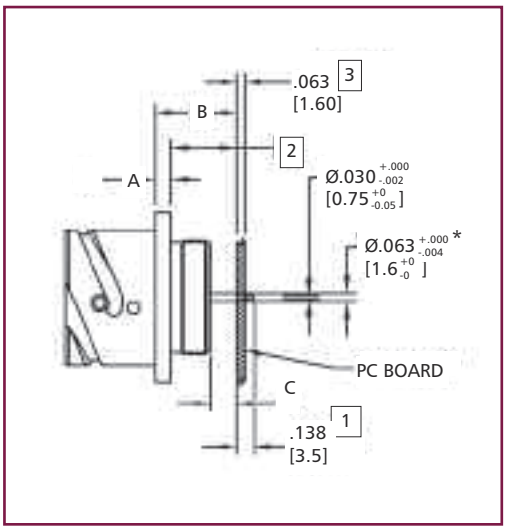

* Or .079 Check with customer service

SHELL SIZE		CIR 020		CONTACT	CLASS
	A	B	C	PIN	
	±0.2 ± .00	±0.5 ± .020	±0.5 ± .020	[note 4]	
	mm inch	mm inch	mm inch		
10 SL	2.79	14.70	4.22	48784-16S	YM
	.110	.579	.166		
	2.79	12.39	1.90	48776-16S	YM4
	.110	.488	.075		
14S	3.20	14.53	4.14	48784-16S	YM
	.126	.572	.163		
	3.20	12.24	1.85	48776-16S	YM4
	.126	.482	.073		
16S	3.20	12.19	1.80	48784-16S	YM
	.126	.480	.071		
	3.20	12.42	2.03	48776-16S	YM4
	.126	.489	.080		
16	3.20	20.00	5.18	46898-1	YM
	.126	.787	.204		
	3.20	21.59	6.78	46898-2	YM1
	.126	.850	.267		
18	3.98	19.91	5.20	46898-1	YM
	.157	.784	.205		
	3.98	21.51	5.22	46898-2	YM1
	.157	.847	.268		
20	3.98	19.89	5.18	46898-1	YM
	.157	.783	.204		
	3.98	21.49	6.78	46898-2	YM1
	.157	.846	.267		
22	3.98	19.89	5.18	46898-1	YM
	.157	.783	.204		
	3.98	21.49	6.78	46898-2	YM1
	.157	.846	.267		
24	3.98	18.41	3.30	46898-1	YM2
	.157	.725	.130		
	3.98	20.00	4.90	46898-2	YM
	.157	.788	.193		
28	3.98	18.41	3.30	46898-1	YM2
	.157	.725	.130		
	3.98	20.00	4.90	46898-2	YM
	.157	.788	.193		
32	3.98	16.81	1.68	46898-1	YM3
	.157	.662	.066		
	3.98	18.41	3.28	46898-2	YM2
	.157	.725	.129		
36	3.98	16.81	1.66	46898-1	YM3
	.157	.662	.067		
	3.98	18.41	3.30	46898-2	YM2
	.157	.725	.130		
40	3.98	16.81	1.68	46898-1	YM3
	.157	.662	.066		
	3.98	18.41	3.28	46898-2	YM2
	.157	.725	.129		

Seating dimensions CIR connectors: PINS

Notes:

1 For sizes 10SL &16S YM - .142[3.6]
For YM4 Version - .078[2.0]
For YML Version - .201[5.11]

2 To obtain the dimension value, subtract A from B.

3 Consult Customer Service Department for PCB thickness other than specified.

4 Consult Customer Service Department for contacts used in receptacles for stand off mounting.

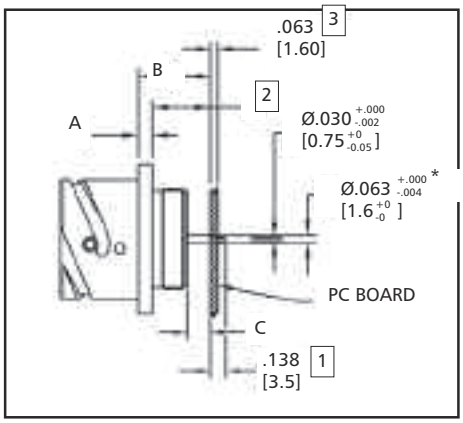

* Or .079 Check with customer service

SHELL SIZE		CIR 030			CIR 07		CONTACT	CLASS
	A	B	C	A	B	C	PIN	
	± 0.2 ± .008	± 0.5 ± .020	± 0.5 ± .020	± 0.2 ± .008		± 0.5 ± .020	[note 4]	
	mm / inch	mm / inch	mm / inch	mm / inch	mm / inch	mm / inch		
10 SL	2.79	11.51	2.1	N/A	N/A	N/A	48784-16S	YM
	.110	.453	.083					
	TBD	TBD	TBD	TBD	TBD	TBD	TBD	YM4
14 S	3.20	10.62	1.29	N/A	N/A	N/A	48784-16S	YM
	.126	.418	.051					
	TBD	TBD	TBD	TBD	TBD	TBD	TBD	YM4
16 S	3.20	10.72	1.29	N/A	N/A	N/A	48784-16S	YM
	.126	.422	.051					
	TBD	TBD	TBD	TBD	TBD	TBD	TBD	YM4
16	3.20	15.95	5.18	4.80	6.27	1.47	46898-1	YM
	.126	.628	.20	.189	.247	.058		
	3.20	17.55	6.7	N/A	N/A	N/A	46898-2	YM1
	.126	.691	.267					
18	3.98	15.95	5.18	4.80	5.31	0.51	46898-1	YM
	.157	.628	.204	.189	.209	.020		
	3.98	17.55	6.78	4.80	6.91	2.11	46898-2	YM1
	.157	.691	.267	.189	.272	.083		
20	3.98	15.95	5.18	4.80	5.31	0.51	46898-1	YM
	.157	.628	.204	.189	.209	.020		
	3.98	17.55	6.78	4.80	6.91	2.11	46898-2	YM1
	.157	.691	.267	.189	.272	.083		
22	3.98	15.95	5.18	4.80	5.31	0.51	46898-1	YM
	.157	.628	.204	.189	.209	.020		
	3.98	17.55	6.78	4.80	6.91	2.11	46898-2	YM1
	.157	.691	.267	.189	.272	.083		
24	3.98	15.95	5.18	4.80	5.31	0.51	46898-1	YM2
	.157	.628	.204	.189	.209	.020		
	3.98	17.55	6.78	4.80	6.91	2.11	46898-2	YM
	.157	.691	.267	.189	.272	.083		
28	3.98	14.96	3.3	N/A	N/A	N/A	46898-1	YM2
	.157	.589	.130					
	3.98	16.56	4.9	N/A	N/A	N/A	46898-2	YM
	.157	.652	.193					
32	3.98	14.96	1.68	N/A	N/A	N/A	46898-1	YM3
	.157	.589	.066					
	3.98	16.56	3.28	N/A	N/A	N/A	46898-2	YM2
	.157	.652	.129					
36	3.98	14.96	1.68	N/A	N/A	N/A	46898-1	YM3
	.157	.589	.066					
	3.98	16.56	3.28	N/A	N/A	N/A	46898-2	YM2
	.157	.652	.129					
40	3.98	14.96	1.68	N/A	N/A	N/A	46898-1	YM3
	.157	.589	.066					
	3.98	16.56	3.28	N/A	N/A	N/A	46898-2	YM2
	.157	.652	.129					

Specifications and dimensions subject to change
Dimensions shown in mm.

- Plug or Receptacle shell styles can accommodate either Pin (P) (Male) or Socket (S) (Female) contacts.
- Select Connector Type - Receptacle (ramps = grooves) or Plug (C/N=coupling nut).
- Select Connector Style - 030, 00, 01, 02, 26, 03 07, 070, TB, 06, 064, 065, 08.

Connector	Shell Style	Description	Reference Drawing Page
	01	Inline Receptacle	Page 74-90
	030	Front or Rear Panel Mount Square Flange Receptacle Maximum panel thickness for rear-mount – see page 169	Page 94-109
	05	Dummy Receptacle Square Flange Same as 020R without threads.	Page 169
	07	Jam Nut Receptacle Without Rear Threads	Page 113
	070	Jam Nut Receptacle With Rear Threads	Page 114-115
	TB	Thru Bulkhead Receptacle	Page 112

Connector Type	Mates With
CIR 01	CIR 06, 08, 064, 065-26
CIR 030, 00/02	CIR 06, 08, 065
CIR 07, 070	CIR 06, 08, 065
CIR TB	CIR 06, 08, 065

Note: For 020R/00 see Section five of additional CIR options on page 175.

Connector	Shell Style	Description	Reference Drawing Page
	06	Straight Plug	Page 117-153
	065	Straight Plug With Extended Heavy Duty Coupling Nut	Page 154-156
	06GG	Straight Plug With Rubber Covered Coupling Nut	Page 121, 128, 131, 133, 135, 137, 143,147
	26/064	Panel Plug	Page 175
	08	Right Angle Plug	Page 157-168

Connector Type	Mates With
CIR 06	CIR 01, 00/020, 030, 07, 070, TB
CIR 08	CIR 030, 00/020, 07, 070, TB
CIR 26/064	CIR 01
CIR 065	CIR 01, 00/020, 03, 030, 07, 070, TB
CIR 06..GG	CIR...00/020 RFS

Specifications and dimensions subject to change
Dimensions shown in mm.

Classes For Terminating Individual Wires

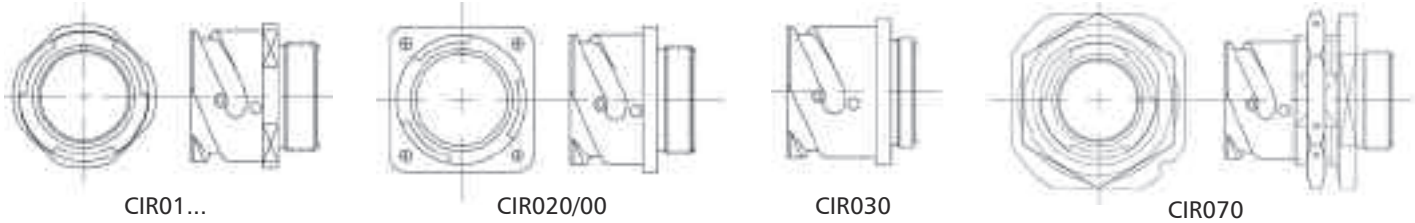

CIR01... CIR020/00 CIR030 CIR030FP, CIR030UN CIR070

Mounting Hole Options (refer to pages 173 & 174)

FP Suffix — Applicable for rear mount only.
Can be added to any class where the application requires the flange with thru mounting holes.
Example: CIR030RVFP-20-4P-F80 TABLE 1 (Refer to page 174)
Note: If FP is not listed, the mounting holes are threaded (metric thread).

UN Suffix — Applicable for rear mount only.
Can be added to any class where application requires the flange with threaded holes.
Example: CIR030RVUN-20-4P-F80 TABLE 2 (Refer to page 174)

NOTE: Mounting holes are threaded (UN thread)

FF Suffix — Applicable for front mount only Can be added to any class where application requires flange with threaded hole (metric thread).

FS Suffix — Applicable for front mount only. Can be added to any class where application requires the 90° chamfered mounting holes to prevent screws from interfering with the rubber covered coupling nut during the mating process. Used with metric screws.
Example: CIR00RVFS-20-4P-F80 TABLE 3 (Refer to page 174)

FSM Suffix — Applicable for front mount only. Can be added to any class where application requires the 82° chamfered mounting holes to prevent screws from interfering with the rubber covered coupling nut during the mating process. Used with UN screws.
Example: CIR00RVFSM-20-4P-F80 TABLE 3 (Refer to page 174)

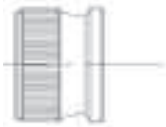

ARV CLASS.....	Short backshell without grommet or provision for accessories	Non-environment proof.
RV CLASS.....	Short backshell with wire sealing grommet and and compression ring. Refer to page 104 for dimensions	Environment proof.

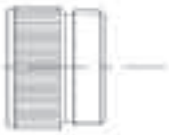

A CLASS.....	Short backshell, no other accessories.	Non-environment proof.
R CLASS.....	Same as A but includes wire sealing grommet and compression ring.	Environment proof.
EXCEPTION:	CIR020R, CIR07R includes shell, insert and contacts only (backshell hardware is not included). Refer to page 97 for dimensions.	

AL/LA CLASS.....	Long backshell, no other accessories.	Non-environment proof.
RL/LR CLASS.....	Same as AL/LA but includes wire sealing grommet and compression ring. Refer to page 71 for dimensions.	Environment proof.

Classes For Terminating Individual Wires

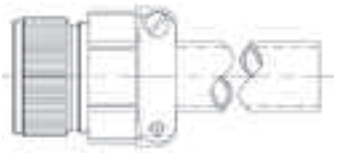

AF CLASS..... Short backshell, with A style clamp and bushing. Non-environment proof.

F CLASS..... Same as AF but includes wire sealing grommet. Environment proof.
and compression ring.
Refer to page 97 for dimensions.

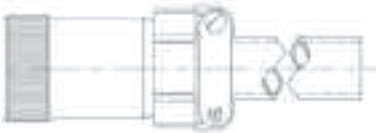

LAF CLASS..... Long backshell with A style clamp and bushing. Non-environment proof.

LF CLASS..... Same as LAF but includes wire sealing grommet Environment proof.
and compression ring.
Refer to page 78 for dimensions.

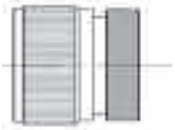

AG CLASS..... Includes the backshell suitable for heat shrink. Non-environment proof.
tubing.

G CLASS..... Same as AG but includes wire sealing grommet Environment proof.
and compression ring.
Refer to page 98 for dimensions.

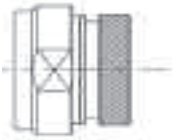

AG2 CLASS..... Includes the swivel backshell suitable for heat. Non-environment proof.
shrink tubing.

G2 CLASS..... Same as AG2 but includes wire sealing grommet Environment proof.
Refer to page 99 for dimensions.

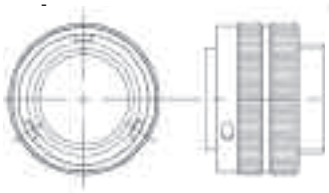

CIR06...

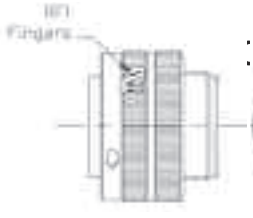

CIRG06...

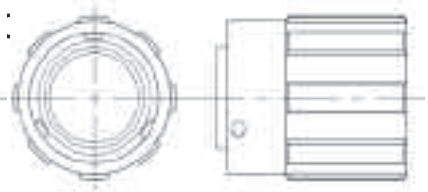

CIR065...

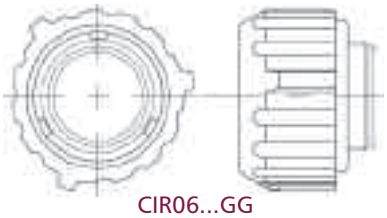

CIR06...GG

ARV CLASS.....	Short backshell without wire sealing grommet.	Non-environment proof.
ARVG CLASS.....	Same as ARV but with rubber covered coupling nut.	Non-environment proof.
RV CLASS.....	Short backshell with wire sealing grommet and compression ring.	Environment proof.
RVGG CLASS.....	Same as RV but with rubber covered coupling nut. Refer to page 149 for dimensions.	Environment proof.

CIR06..straight CIR08...90°

A CLASS.....	Straight short or 90° backshell, no other accessories.	Non-environment proof.
AGG CLASS.....	Same as A but with rubber covered coupling nut.	Non-environment proof.
R CLASS.....	Same as A but includes wire sealing grommet and compression ring.	Environment proof.
RGG CLASS.....	Same as R but with rubber covered coupling nut. Refer to page 144 for dimensions.	Environment proof.

AL/LA CLASS.....	Long backshell, no other accessories.	Non-environment proof.
ALGG/LAGG CLASS...	Same as AL/LA but with rubber covered coupling nut.	Non-environment proof.
RL/LR CLASS.....	Same as AL/LA but includes wire sealing grommet and compression ring.	Environment proof.
RLGG/LRGG CLASS...	Same as RL/LR but with rubber covered coupling nut. Refer to page 147 for dimensions.	Environment proof.

CIR06..straight CIR08...90°

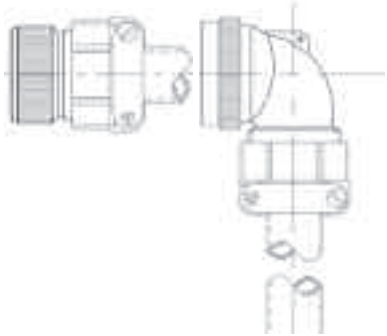

AF CLASS.....	Straight short or 90° backshell with A style clamp and bushing.	Non-environment proof.
AFGG CLASS.....	Same as AF but with rubber covered coupling nut.	Non-environment proof.
F CLASS.....	Same as AF but includes wire sealing grommet and compression ring.	Environment proof.
FGG CLASS.....	Same as F but with rubber covered coupling nut. Refer to page 129 for dimensions.	Environment proof.

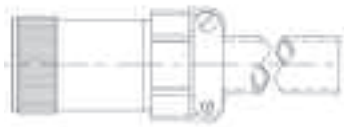

LAF CLASS.....	Long backshell with A style clamp and bushing.	Non-environment proof.
LAFGG CLASS.....	Same as LAF but with rubber covered coupling nut.	Non-environment proof.
LF CLASS.....	Same as LAF but includes wire sealing grommet and compression ring.	Environment proof.
LFGG CLASS.....	Same as LF but with rubber covered coupling nut. Refer to page 138 for dimensions.	Environment proof.

Classes For Terminating Individual Wires

CIR06..straight CIR08...90°

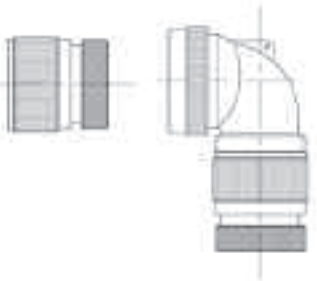

AG CLASS.....	Includes a backshell that is suitable for heat shrink tubing.	Non-environment proof.
AGGG CLASS.....	Same as AG but with rubber covered coupling nut.	Non-environment proof.
G CLASS.....	Same as AG but includes wire sealing grommet and compression ring	Environment proof.
GGG.....	Same as G but with rubber covered coupling nut.	Environment proof.
	Refer to page 135 for dimensions.	

CIR06..straight CIR08...90°

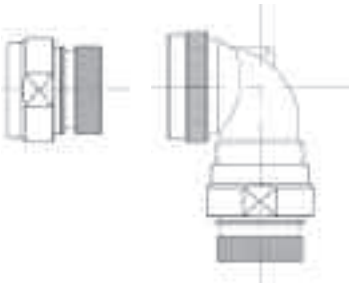

AG2 CLASS.....	Includes positively locked backshells with the swivel coupling nut and for use with heat shrink tubing.	Non-environment proof.
AG2GG CLASS.....	Same as AG2 but with rubber covered coupling nut.	Non-environment proof.
G2 CLASS.....	Same as AG2 but includes wire sealing grommet.	Environment proof.
G2GG CLASS.....	Same as G2 but with rubber covered coupling nut.	
	Refer to page 131 for dimensions.	Environment proof.

CIR064PP/CIR26

PP CLASS.....	Plug that includes a square flange for panel mount. No rear threads for accessories.	Environment proof if used with panel sealing gasket.
	Refer to page 175 for dimensions.	

Specifications and dimensions subject to change
Dimensions shown in mm.

Classes For Terminating Jacketed Cable

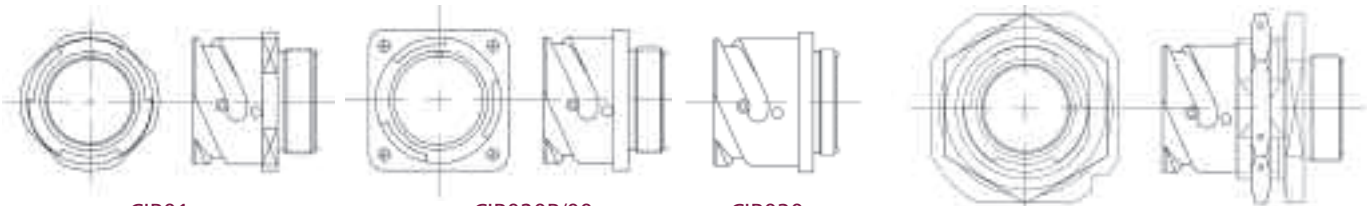

CIR01 CIR020R/00 CIR030 CIR030FP CIR030UN CIR070

Mounting Hole Options (refer to pages 179 & 180)

FP Suffix	Applicable for rear mount only. Can be added to any class where the application requires the flange with thru mounting holes. Example: CIR030RVFP-20-4P-F80 TABLE 1 (Refer to page 180) Note: If FP is not listed, the mounting holes are threaded (metric thread). TABLE 2 (Refer to page 180)
UN Suffix	Applicable for rear mounting only. Can be added to any class where application requires the flange with threaded holes. Example: CIR030RVUN-20-4P-F80 TABLE 2 (Refer to page 180) NOTE: Mounting holes are threaded (UN thread)
FF Suffix	Applicable for front mounting only. Can be added to any class where application requires flange with threaded holes (metric thread).
FS Suffix	Applicable for front mount only. Can be added to any class where application requires the 90° chamfered mounting holes to prevent screws from interfering with the rubber covered coupling nut during the mating process. Used with metric screws. Example: CIR00RVFS-20-4P-F80 TABLE 3 (Refer to page 180)
FSM Suffix	Applicable for front mount only. Can be added to any class where application requires the 82° chamfered mounting holes to prevent screws from interfering with the rubber covered coupling nut during the mating process. Used with UN screws. Example: CIR00RVFSM-20-4P-F80 TABLE 3 (Refer to page 180)

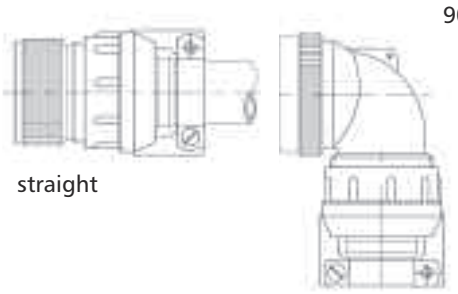

CF CLASS....	Straight short backshell with C style clamp.	Environment proof.
CFZ CLASS.....	Same as CF but includes wire sealing grommet and compression ring.	Environment proof.

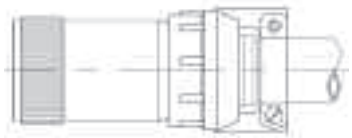

LCF CLASS.....	Long backshell with C style clamp.	Environment proof.
LCFZ CLASS.	Same as LCF but includes wire sealing grommet and compression ring.	Environment proof.

Classes For Terminating Jacketed Cable

SL

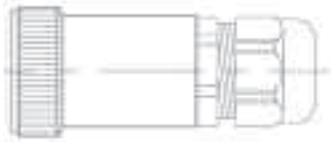

SL CLASS.....	Long metal backshell with non-metallic fitting with PG thread.	Environment proof.
SL1 CLASS.....	Same as SL but includes wire sealing grommet and compression ring.	Environment proof.

SLX

SLX CLASS.....	Same as SL but with non-metallic spiral fitting with PG thread (to prevent sharp angle bending).	Environment proof.

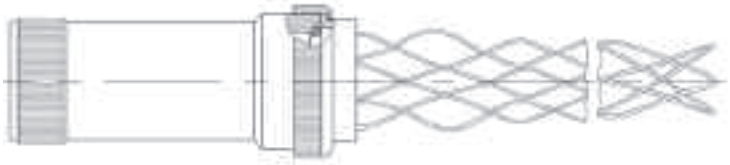

LC CLASS.....	Long LC backshell with internal adapter suitable for various sizes of cable, grommet, commpression ring and cord grip included.	Environment proof.
LC3 CLASS.....	Same as LC but with rubber covered coupling nut	Environment proof.
LCG CLASS.....	Same as LC but without the wire sealing grommet and compression ring.	Environment proof.

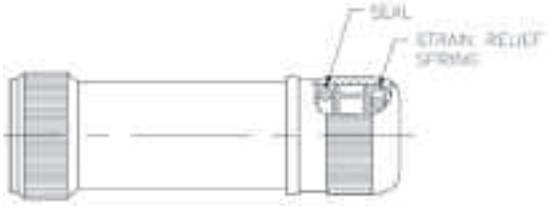

WN/WK CLASS.....	Long WK backshell and backnut assembly suitable to seal and grip on the jacket of the cable.	Environment proof.
WN/WKG CLASS.....	Same as WK but with wire sealing grommet and compression ring.	Environment proof.

Specifications and dimensions subject to change
Dimensions shown in mm.

Classes For Terminating Jacketed Cable

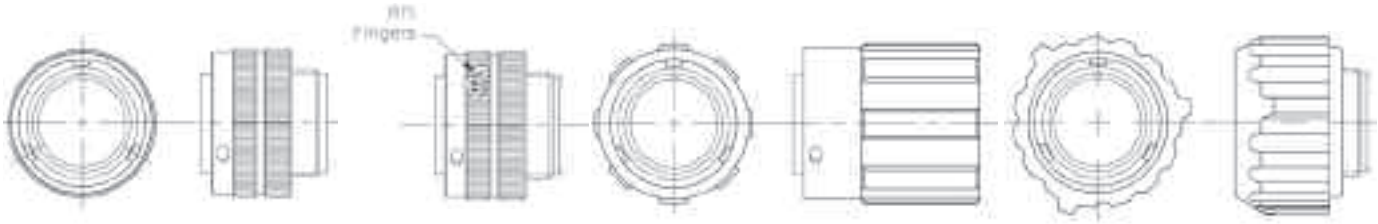

CIR06... CIRG06... CIR065.. CIR06...GG

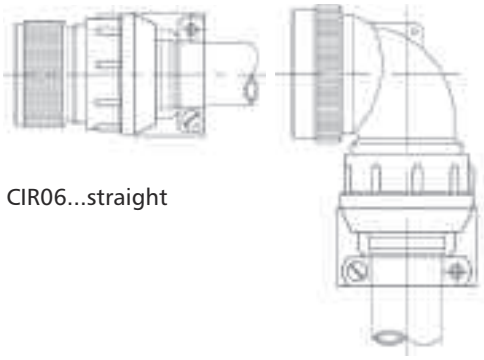

CIR06...straight CIR08...90°

CF CLASS.....	Straight short or 90° backshell with C style clamp.	Environment proof.
CFGG CLASS.....	Same as CF but with rubber covered coupling nut.	Environment proof.
CFZ CLASS.....	Same as CF but includes wire sealing grommet and compression ring.	Environment proof.
CFZGG CLASS.....	Same as CFZ but with rubber covered coupling nut.	Environment proof.

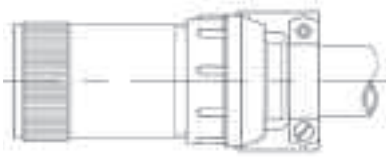

LCF CLASS.....	Long backshell with C style clamp.	Environment proof.
LCFGG CLASS.....	Same as LCF but with rubber covered coupling nut.	Environment proof.
LCFZ CLASS.....	Same as LCF but includes wire sealing grommet and compression ring.	Environment proof.
LCFZGG CLASS...	Same as LCFZ but with rubber covered coupling nut.	Environment proof.

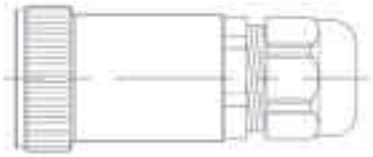

SL CLASS.....	Long metal backshell with non-metallic fitting with PG thread.	Environment proof.
SLGG CLASS.....	Same as SL but with rubber covered coupling nut.	Environment proof.
SL1 CLASS.....	Same as SL but includes wire sealing grommet and compression ring.	Environment proof.

SLX CLASS.....	Same as SL but with non-metallic spiral fitting with PG thread (to prevent sharp angle bending).	Environment proof.

Classes For Terminating Jacketed Cable

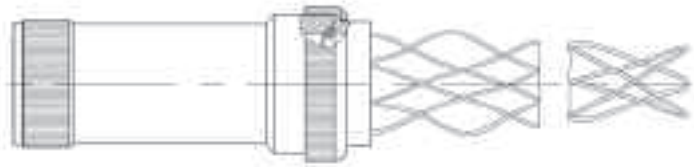

LC CLASS.....	Long LC backshell with internal adapter suitable for various sizes of cable, grommet and a cord grip included.	Environment proof.
LCGG CLASS.....	Same as LC but with rubber covered coupling nut.	Environment proof.
LCG CLASS.....	Same as LC but without the wire sealing grommet and compression ring.	Environment proof.
LCGGG CLASS.....	Same as LCG but with rubber covered coupling nut.	Environment proof.

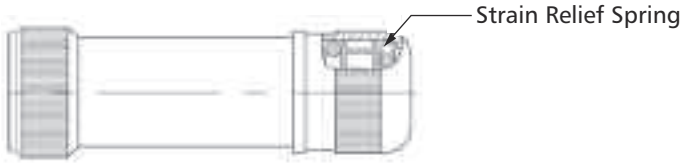

WK CLASS.....	Long WK backshell and backnut assembly suitable to seal and grip on the jacket of the cable.	Environment proof.
WN/WKG CLASS.....	Same as WK but with wire sealing grommet and compression ring.	Environment proof.
WK3 CLASS.....	Same as WK but with rubber covered coupling nut.	Environment proof.

Classes For Terminating Braided Shield

Receptacles

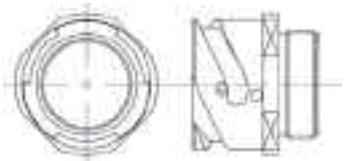

CIR01

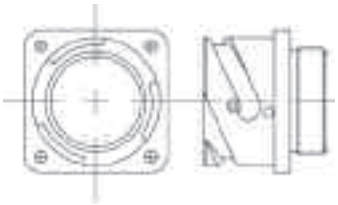

CIR020R/00

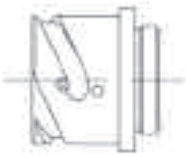

CIR030
CIR030FP
CIR030UN

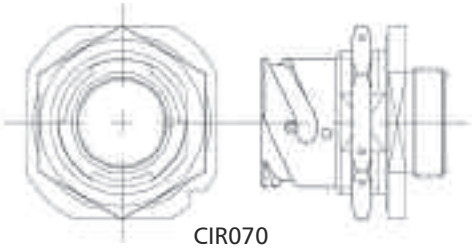

CIR070

Plugs

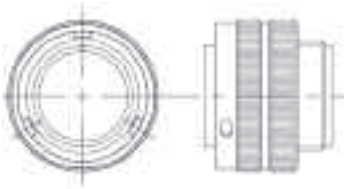

CIR06...

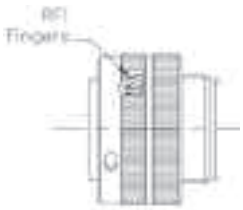

CIRG06...

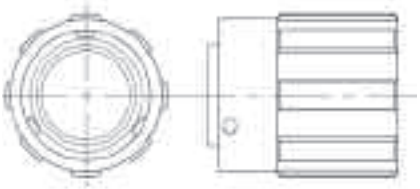

CIR065...

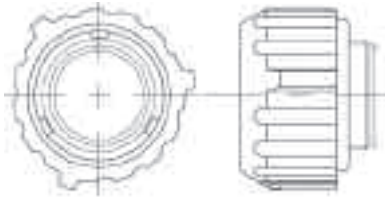

CIR06...GG

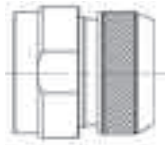

straight

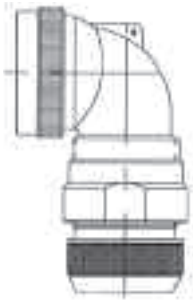

90°

SB CLASS..... Straight or 90° backshell with the swivel coupling nut and adapter suitable for use with heat shrink tubing or boot. The shield is terminated and secured with the wire prior to tightening the backnut. Environment proof.
Wire sealing grommet is included.
Recommended to use with RFI fingers in CIRG06SB/CIRG08SB.

ASB CLASS..... Same as SB but without the grommet . Environment proof.

straight

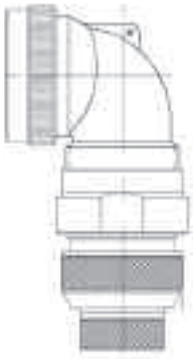

90°

SBT CLASS.... Similar to SB but the backshell includes a knurled extension for the shield termination via tinel lock ring (not supplied). Environment proof.

ASBT CLASS... Same as SBT but without the grommet . Environment proof.
Refer to page 106 for receptacle dimensions.
Refer to page 152 for plug dimensions.

WCML.....Consult Factory

RFI Spring

WK1 CLASS... Long WK backshell, grommet and backnut assembly suitable for shield termination and strain relief of jacket. Environment proof.
Refer to page 108 for receptacle dimensions.
Refer to page 152 for plug dimensions.

Classes For Terminating Conduit

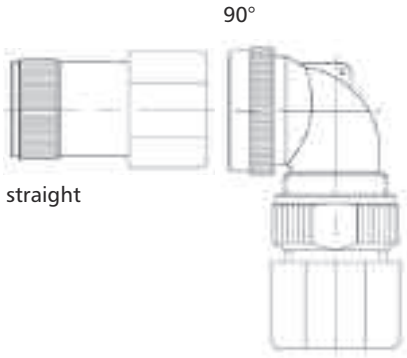

EF TYPE ANACONDA SEALTITE CONDUIT

RK CLASS.....	Straight long or 90° RK backshell with adapter and backnut assembly to seal and grip on the jacket of a steel core flexible EF type Anaconda sealtite conduit. Class includes a wire sealing grommet and compression ring.	Environment proof.
ARK CLASS.....	Same as RK class but without the wire sealing grommet and compression ring.	Environment proof.
RKGG CLASS.....	Same as RK but with rubber covered coupling nut (applicable for plugs only). Refer to page 103 for receptacle dimensions. Refer to page 142 for plug dimensions.	Environment proof.

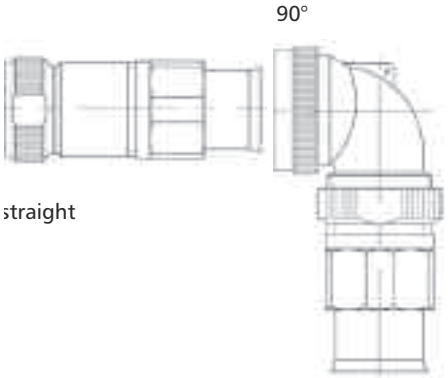

CNP TYPE ANACONDA SEALTITE CONDUIT

NM CLASS.....	Straight long or 90° NM backshell with adapter and-backnut assembly to seal and grip on the jacket of a non-metallic flexible CNP type Anaconda sealtite conduit. Class includes a wire sealing grommet and compression ring.	Environment proof.
NMG CLASS.....	Same as NM but without the wire sealing grommet and compression ring.	Environment proof.
NMGG CLASS....	Same as NM but with rubber covered coupling nut (applicable for plugs only). Refer to page 139 for plug dimensions.	Environment proof.

Specifications and dimensions subject to change
Dimensions shown in mm.

Classes For Terminating Conduit

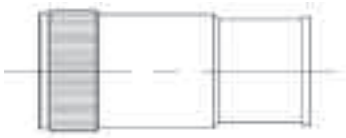

FLEXIBLE RUBBER HOSE

BC CLASS..... Long metal backshell with the rear lip suitable for Flexible rubber conduit (hose) being secured to the backshell by a metal band or a hose clamp. Environment proof.

Refer to page 139 for plug dimensions.

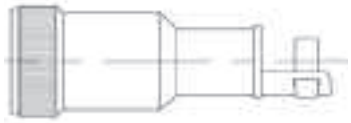

FLEXIBLE RUBBER HOSE

LP CLASS..... Similar backshell to BC but with extended rear for the mechanical strain relief of individual wires within the conduit. Flexible rubber conduit (hose) is being secured to the backshell by a metal band or a hose clamp. Environment proof.

Refer to page 138 for plug dimensions.

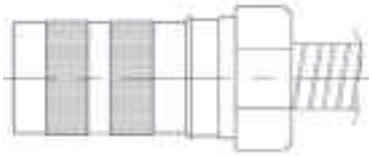

ELECTRI-FLEX CONDUIT

CMEG CLASS..... Includes the backshell hardware suitable for flexible metal core Electri-flex conduit Class includes a wire sealing grommet and compression ring. Environment proof.

Refer to page 126 for plug dimensions.

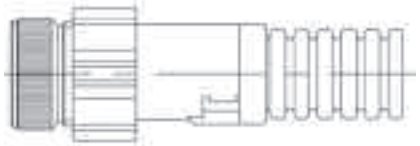

PMA CONDUIT

PIRAG CLASS.....Suitable for PMA Conduit via BVIRA fitting. Environment proof.

PIRB CLASS..... Suitable for PMA Conduit via BVIRB fitting. Environment proof.

PIVG CLASS..... Suitable for PMA Conduit via BVIVG fitting. Environment proof.

PILJ CLASS..... Suitable for PMA Conduit via BFILJ fitting. Environment proof.

Refer to page 140 for plug dimensions

Receptacle with through mounting holes and backshell. For threaded and countersunk mounting holes type, see page 197.
R type has individual wire sealing grommet.

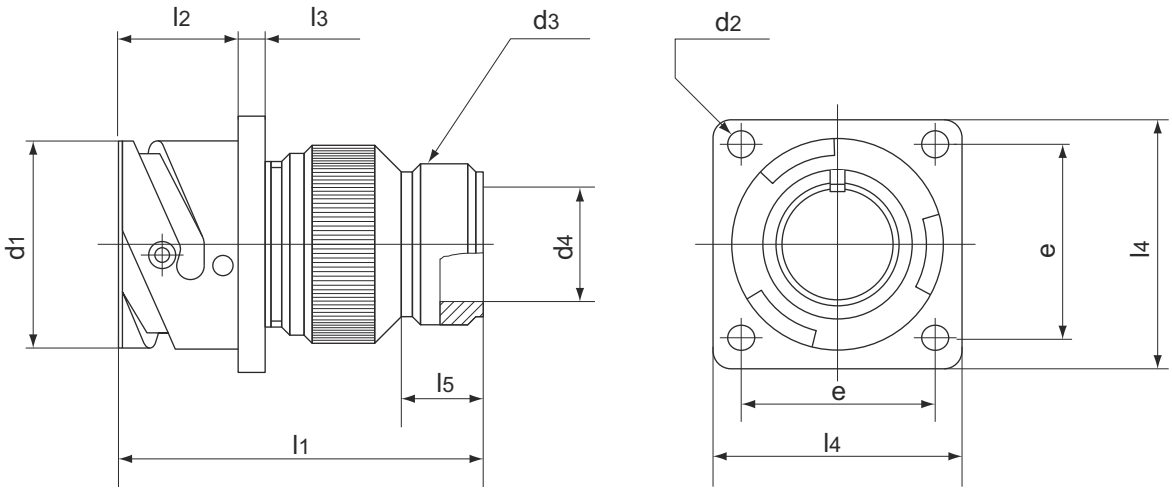

Shell Size	d_1 +0 -0,15	d_2 H13	d_3 Thread in inches	d_4 +0,1 -0	e ±0,1	l_1 max.	l_2 +0,4 -0	l_3 ±0,2	l_4 ±0,3	l_5 min.
10SL	18,2	3,2	5/8-24 UNEF-2A	10,4	18,2	43,0	14,2	2,8	25,4	9,5
	0.72	0.126		0.41	0.717	1.69	0.559	0.110	1.00	0.37
14S	24,6	3,2	3/4-20 UNEF-2A	13,2	23,0	47,0	14,2	3,2	30,0	9,5
	0.97	0.126		0.52	0.906	1.85	0.559	0.126	1.181	0.37
16S	27,4	3,2	7/8-20 UNEF-2A	16,2	24,6	47,0	14,2	3,2	32,5	9,5
	1.08	0.126		0.64	0.969	1.85	0.559	0.126	1.280	0.37
16	27,4	3,2	7/8-20 UNEF-2A	16,2	24,6	58,0	19,0	3,2	32,5	9,5
	1.08	0.126		0.64	0.969	2.28	0.748	0.126	1.280	0.37
18	30,8	3,2	1”-20 UNEF-2A	19,2	27,0	58,0	19,0	4,0	35,0	9,5
	1.21	0.126		0.76	1.063	2.28	0.748	0.157	1.378	0.37
20	34,2	3,2	1”3/16-18 UNEF-2A	22,0	29,4	58,0	19,0	4,0	38,0	9,5
	1.35	0.126		0.87	1.157	2.28	0.748	0.157	1.496	0.37
22	37,4	3,2	1”3/16-18 UNEF-2A	24,5	31,8	59,0	19,0	4,0	41,0	9,5
	1.47	0.126		0.97	1.252	2.32	0.748	0.157	1.614	0.37
24	40,9	3,7	1”7/16-18 UNEF-2A	27,8	34,9	61,0	20,6	4,0	44,5	9,5
	1.61	0.146		1.09	1.374	2.40	0.811	0.157	1.752	0.37
28	46,7	3,7	1”7/16-18 UNEF-2A	31,2	39,7	67,0	20,6	4,0	50,8	9,5
	1.84	0.146		1.23	1.563	2.64	0.811	0.157	2.000	0.37
32	53,4	4,3	1”3/4-18 UNS-2A	37,8	44,5	71,0	22,2	4,0	57,0	11,0
	2.10	0.169		1.49	1.752	2.80	0.874	0.157	2.244	0.43
36	59,6	4,3	2”-18 UNS-2A	45,0	49,2	71,0	22,2	4,0	63,5	11,8
	2.35	0.169		1.77	1.937	2.80	0.874	0.157	2.500	0.47
40	65,5	4,3	2”1/4-16 UN-2A	51,2	55,5	86,0	22,2	4,0	69,9	11,8
	2.58	0.169		2.02	2.185	3.39	0.874	0.157	2.752	0.47

Dimensions are mm. over inches

Receptacle with through mounting holes and cable clamp for jacketed cables. CFZ type includes an individual wire sealing grommet. For threaded and countersunk mounting holes type, see page 197.

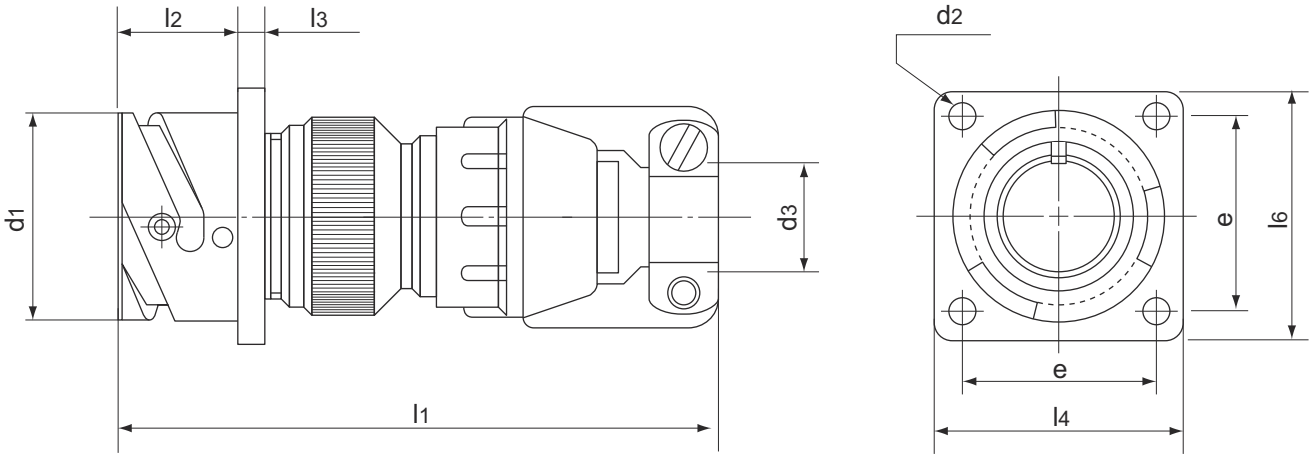

Shell Size	d_1 +0 -0,15	d_2 H13	d_3 open	d_3 closed	e ±0,1	l_1 max.	l_2 +0,4 -0	l_3 ±0,2	l_4 ±0,3
10SL	18,2	3,2	7,93	2,38	18,2	73	14,2	2,8	25,4
	.72	.126	.312	.094	.717	2.87	.559	.110	1.00
14S	24,6	3,2	11,12	6,35	23,0	77	14,2	3,2	30,0
	.97	.126	.438	.25	.906	0.30	.559	.126	1.181
16S	27,4	3,2	13,48	8	24,6	77	14,2	3,2	32,5
	1.08	.126	.531	.315	.969	0.30	.559	.126	1.280
16	27,4	3,2	13,48	8	24,6	88	19,0	3,2	32,5
	1.08	.126	.531	.315	.969	3.49	.748	.126	1.280
18	30,8	3,2	15,87	9,6	27,0	91	19,0	4,0	35,0
	1.21	.126	.625	.375	1.063	3.58	.748	.157	1.378
20	34,2	3,2	19,0	11,3	29,4	91	19,0	4,0	38,0
	1.35	.126	.748	.445	1.157	3.58	.748	.157	1.496
22	37,4	3,2	19,0	11,3	31,8	92	19,0	4,0	41,0
	1.47	.126	.748	.445	1.252	3.62	.748	.157	1.614
24	40,9	3,7	23,8	15,5	34,9	97	20,6	4,0	44,5
	1.61	.146	.938	.610	1.374	3.82	.811	.157	1.752
28	46,7	3,7	23,8	15,5	39,7	103	20,6	4,0	50,8
	1.84	.146	.938	.610	1.563	4.05	.811	.157	2.000
32	53,4	4,3	31,75	23,4	44,5	113	22,2	4,0	57,0
	2.10	.169	1.250	.921	1.752	4.45	.874	.157	2.244
36	59,6	4,3	35,0	23,4	49,2	120	22,2	4,0	63,5
	2.35	.169	1.378	.921	1.937	4.72	.874	.157	2.500
40	65,5	4,3	41,5	29,9	55,5	135	22,2	4,0	69,9
	2.58	.169	1.625	1.177	2.185	5.31	.874	.157	2.752

Dimensions are mm. over inches

Receptacle with through mounting holes, individual wire sealing grommet and cable clamp with bushing. AF type has no grommet. For threaded and countersunk mounting holes type, see page 197.

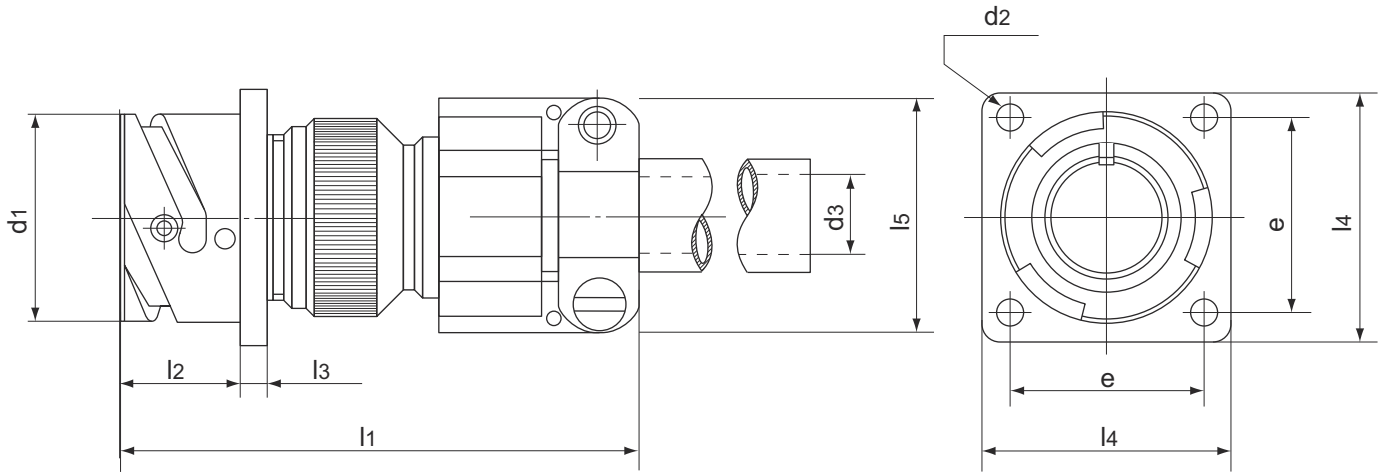

Shell Size	d_1 +0 -0,15	d_2 H13	d_3 * max	e ±0,1	l_1 max.	l_2 +0,4 -0	l_3 ±0,2	l_4 ±0,3	l_5 max.
10SL	18,2	3,2	5,6	18,2	64	14,2	2,8	25,4	22,7
	.72	.126	.22	.717	2.52	.559	.110	1.00	.89
14S	24,6	3,2	7,9	23,0	69	14,2	3,2	30,0	27,5
	.97	.126	.31	.906	2.72	.559	.126	1.181	1.08
16S	27,4	3,2	11,0	24,6	71	14,2	3,2	32,5	30,0
	1,08	.126	.44	.969	2.79	.559	.126	1.280	1.18
16	27,4	3,2	11,0	24,6	82	19,0	3,2	32,5	30,0
	1,08	.126	.44	.969	3.23	.748	.126	1.280	1.18
18	30,8	3,2	14,2	27,0	82	19,0	4,0	35,0	32,2
	1.21	.126	.56	1.063	3.23	.748	.157	1.378	1.27
20	34,2	3,2	15,8	29,4	82	19,0	4,0	38,0	37,5
	1.35	.126	.63	1.157	3.23	.748	.157	1.496	1.48
22	37,4	3,2	15,8	31,8	83	19,0	4,0	41,0	37,5
	1.47	.126	.63	1.252	3.23	.748	.157	1.614	1.48
24	40,9	3,7	19,0	34,9	87	20,6	4,0	44,5	43,3
	1.61	.146	.75	1.374	3.42	.811	.157	1.752	1.71
28	46,7	3,7	19,0	39,7	93	20,6	4,0	50,8	43,3
	1.84	.146	.75	1.563	3.66	.811	.157	2.0	1.71
32	53,4	4,3	23,8	44,5	99	22,2	4,0	57,0	51,7
	2.10	.169	.94	1.752	3.90	.874	.157	2.244	2.04
36	59,6	4,3	31,7	49,2	100	22,2	4,0	63,5	58,0
	2.35	.169	1.25	1.937	3.90	.874	.157	2.5	2.28
40	65,5	4,3	34,9	55,5	128	22,2	4,0	69,9	68,5
	2.58	.169	1.38	2.185	5.04	.874	.157	2.752	2.69

* Max. permissible outside diameter of cable.
Dimensions are mm. over inches

Receptacle with through mounting holes, individual wire sealing grommet and backshell for heat shrinkable tubing. AG type has no grommet. For threaded and countersunk mounting holes type, see page 197.

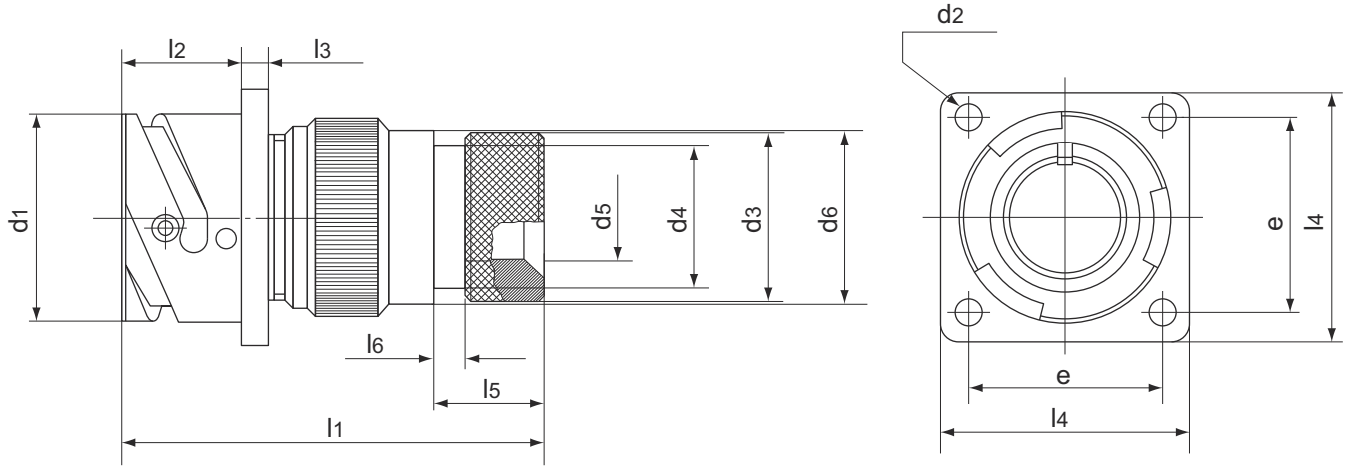

Shell Size	d_1 +0 -0,15	d_2 H13	d_3 ±0,2	d_4 max.	d_5 ±0,1	d_6 ±0,2	e ±0,1	l_1 max.	l_2 +0,4 -0	l_3 ±0,2	l_4 ±0,3	l_5 ±0,1	l_6 ±0,1
10SL	18,2	3,2	15,5	13,3	7,9	17,0	18,2	48	14,2	2,8	25,4	11,7	3,5
	.72	.126	.610	.52	0.31	.669	.717	1.89	.559	.110	1.00	.461	.138
14S	24,6	3,2	19,1	17,0	10,8	20,1	23,0	48	14,2	3,2	30,0	11,7	3,5
	.97	.126	.752	.66	0.42	.791	.906	0.89	.559	.126	1.181	.461	.138
16S	27,4	3,2	23,9	21,9	13,7	23,5	24,6	48	14,2	3,2	32,5	11,7	3,5
	1.08	.126	.941	.86	0.54	.925	.969	1.89	.559	.126	1.280	.461	.138
16	27,4	3,2	23,9	21,9	13,7	23,5	24,6	60	19,0	3,2	32,5	11,5	3,5
	1.08	.126	.941	.86	0.54	.925	.969	2.36	.748	.126	1.280	.453	.138
18	30,8	3,2	23,9	21,9	14,8	26,5	27,0	60	19,0	4,0	35,0	11,5	3,5
	1.21	.126	.941	.86	0.58	1.043	1.063	2.36	.748	.157	1.378	.453	.138
20	34,2	3,2	29,6	26,2	18,9	30,2	29,4	65	19,0	4,0	38,0	12,4	3,5
	1.35	.126	1.165	1.03	0.74	1.189	1.157	2.56	.748	.157	1.496	.488	.138
22	37,4	3,2	29,6	26,2	21	33,6	31,8	65	19,0	4,0	41,0	12,4	3,5
	1.47	.126	1.165	1.03	0.83	1.323	1.252	2.56	.748	.157	1.614	.488	.138
24	40,9	3,7	37,8	34,5	24,8	36,1	34,9	65	20,6	4,0	44,5	12,7	3,5
	1.61	.146	1.488	1.35	0.98	1.421	1.374	2.56	.811	.157	1.752	.500	.138
28	46,7	3,7	37,8	34,5	27,2	41,4	39,7	65	20,6	4,0	50,8	12,7	3,5
	1.84	.146	1.488	1.35	1.07	1.63	1.563	2.56	.811	.157	2.000	.500	.138
32	53,4	4,3	47,8	43,6	33,5	48,6	44,5	70	22,2	4,0	57,0	15,2	3,5
	2.10	.169	1.882	1.71	1.32	1.913	1.752	2.75	.874	.157	2.244	.598	.138
36	59,6	4,3	47,8	43,6	38,7	54,8	49,2	75	22,2	4,0	63,5	15,2	3,5
	2.35	.169	1.882	1.71	1.52	2.157	1.937	2.95	.874	.157	2.500	.598	.138
40	65,5	4,3	57,8	52,6	48,2	60,9	55,5	77	22,2	4,0	69,9	15,2	3,5
	2.58	.169	2.276	2.07	1.90	2.402	2.185	3.03	.874	.157	2.752	.610	.138

Dimensions are mm. over inches

Receptacle with through mounting holes, individual wire sealing grommet and a two piece swivel backshell for heat shrinkable tubing. For threaded and countersunk mounting holes, see page 197. AG2 type has no grommet.

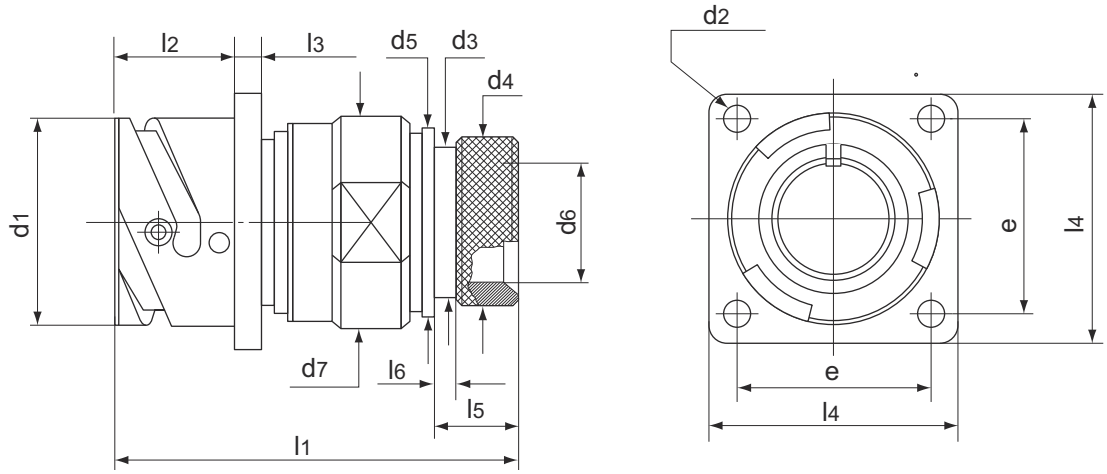

Shell Size	d_1 +0 -0,15	d_2 H13	d_3 ±0,1	d_4 —	d_5 ±0,1	d_6 ±0,1	d_7 max.	e ±0,1	l_1 * ~	l_2 +0,4 -0	l_3 ±0,2	l_4 ±0,3	l_5 ±0,1	l_6 ±0,1
10SL	18,2	3,2	13,0	15,5	17,0	8,6	22	18,2	49,8	14,2	2,8	25,4	11,7	3,5
	.72	.126	.52	.610	.669	.339	0.89	.717	1.96	.559	.110	1.00	.461	.138
14S	24,6	3,2	16,8	19,1	20,1	11,2	25	23.0	49,8	14,2	3,2	30,0	11,7	3,5
	.97	.126	.66	.752	.791	.441	0.98	.906	1.96	.559	.126	1.181	.461	.138
16S	27,4	3,2	21,7	23,9	23,5	14	28	24,6	50,6	14,2	3,2	32,5	11,7	3,5
	1.08	.126	.86	.941	.925	.551	1.10	.969	1.99	.559	.126	1.280	.461	.138
16	27,4	3,2	21,7	23,9	23,5	14	28	24,6	60,1	19,0	3,2	32,5	11,5	3,5
	1.08	.126	.86	.941	.925	.551	1.10	.969	2.37	.748	.126	1.280	.453	.138
18	30,8	3,2	21,7	23,9	26,5	16,4	31	27,0	59,6	19,0	4,0	35,0	11,5	3,5
	1.21	.126	.86	.941	1.043	.646	1.22	1.063	2.35	.748	.157	1.378	.453	.138
20	34,2	3,2	26,1	29,6	30,2	19,3	35	29,4	60,3	19,0	4,0	38,0	12,4	3,5
	1.35	.126	1.03	1.165	1.189	.760	1.38	1.157	2.37	.748	.157	1.496	.488	.138
22	37,4	3,2	26,1	29,6	33,6	22	38	31,8	60,3	19,0	4,0	41,0	12,4	3,5
	1.47	.126	1.03	1.165	1.323	.866	1.50	1.252	2.37	.748	.157	1.614	.488	.138
24	40,9	3,7	34,3	37,8	36,1	25	41	34,9	62,9	20,6	4,0	44,5	12,7	3,5
	1.61	.146	1.35	1.488	1.421	.984	1.61	1.374	2.48	.811	.157	1.752	.500	.138
28	46,7	3,7	34,3	37,8	41,4	28	48	39,7	64,7	20,6	4,0	50,8	12,7	3,5
	1.84	.146	1.35	1.488	1.63	1.102	1.89	1.563	2.55	.811	.157	2.000	.500	.138
32	53,4	4,3	43,4	47,8	48,6	34,8	54	44,5	67	22,2	4,0	57,0	15,2	3,5
	2.10	.169	1.71	1.882	1.913	1.370	2.12	1.752	2.64	.874	.157	2.244	.598	.138
36	59,6	4,3	43,4	47,8	54,8	38,7	61	49,2	67	22,2	4,0	63,5	15,2	3,5
	2.35	.169	1.71	1.882	2.157	1.524	2.40	1.937	2.64	.874	.157	2.500	.598	.138
40	65,5	4,3	52,6	57,8	61,0	48,2	68	55,5	67,3	22,2	4,0	69,9	15,5	3,5
	2.58	.169	2.07	2.276	2.402	1.898	2.68	2.185	2.65	.874	.157	2.752	.610	.138

* Nominal values after coupling the backshell

Dimensions are mm. over inches

Receptacle with through mounting holes, long backshell and cable clamp for jacketed cables. LCFZ type also has an individual wire sealing grommet. For threaded and countersunk mounting holes, see page 197.

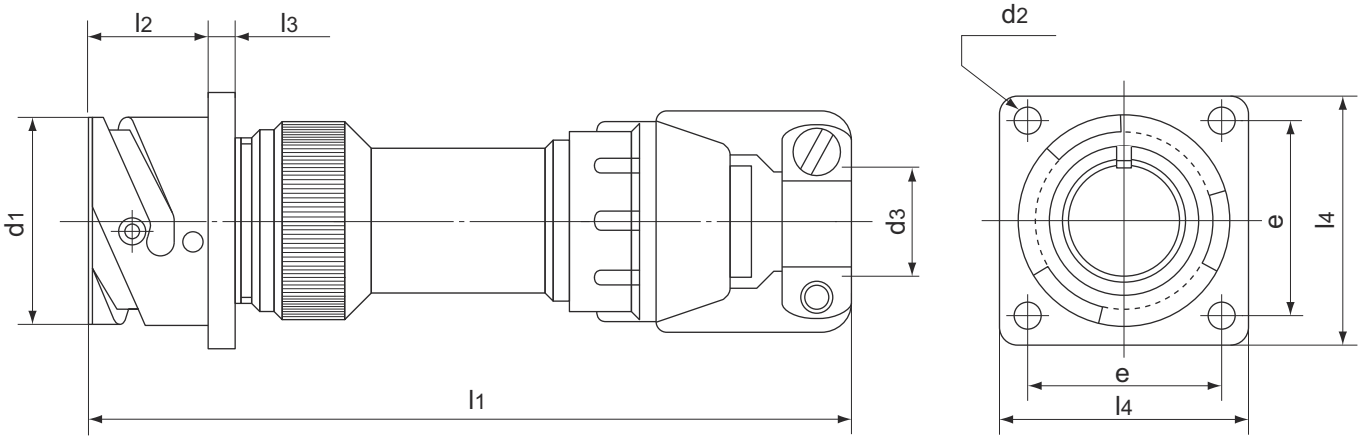

Shell Size	d_1 +0 -0,15	d_2 H13	d_3 open	d_3 closed	e ±0,1	l_1 max.	l_2 +0,4 -0	l_3 ±0,2	l_4 ±0,3
10SL	18,2	3,2	7,93	2,38	18,2	101	14,2	2,8	25,4
	.72	.126	.312	.094	.717	3.98	.559	.110	1.00
14S	24,6	3,2	11,12	6,35	23,0	101	14,2	3,2	30,0
	.97	.126	.438	.25	.906	3.98	.559	.126	1.181
16S	27,4	3,2	13,48	8	24,6	101	14,2	3,2	32,5
	1.08	.126	.531	.315	.969	3.98	.559	.126	1.280
16	27,4	3,2	13,48	8	24,6	114	19,0	3,2	32,5
	1.08	.126	.531	.315	.969	4.49	.748	.126	1.280
18	30,8	3,2	15,87	9,6	27,0	119	19,0	4,0	35,0
	1.21	.126	.625	.375	1.063	4.68	.748	.157	1.378
20	34,2	3,2	19,0	11,3	29,4	119	19,0	4,0	38,0
	1.35	.126	.748	.445	1.157	4.68	.748	.157	1.496
22	37,4	3,2	19,0	11,3	31,8	119	19,0	4,0	41,0
	1.47	.126	.748	.445	1.252	4.68	.748	.157	1.614
24	40,9	3,7	23,8	15,5	34,9	124	20,6	4,0	44,5
	1.61	.146	.938	.610	1.374	4.88	.811	.157	1.752
28	46,7	3,7	23,8	15,5	39,7	130	20,6	4,0	50,8
	1.84	.146	.938	.610	1.563	5.12	.811	.157	2.000
32	53,4	4,3	31,75	23,4	44,5	137	22,2	4,0	57,0
	2.10	.169	1.250	.921	1.752	5.39	.874	.157	2.244
36	59,6	4,3	35,0	23,4	49,2	144	22,2	4,0	63,5
	2.35	.169	1.378	.921	1.937	5.67	.874	.157	2.500
40	65,5	4,3	41,25	29,9	55,5	144	22,2	4,0	69,9
	2.58	.169	1.625	1.177	2.185	5.67	.874	.157	2.752

Dimensions are mm. over inches

Receptacle with through mounting holes, long backshell and cable clamp with bushing. LF type also has an individual sealing grommet. For threaded and countersunk mounting holes, see page 197.

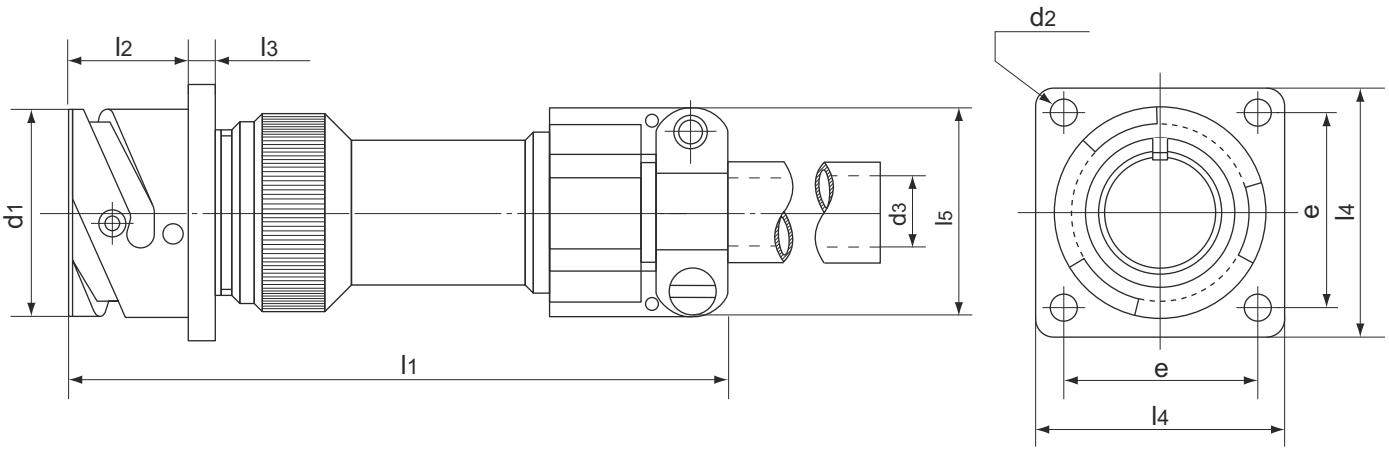

Shell Size	d_1 +0 -0,15	d_2 H13	d_3 * max	e ±0,1	l_1 max.	l_2 +0,4 -0	l_3 ±0,2	l_4 ±0,3	l_5 max.
10SL	18,2	3,2	5,6	18,2	92	14,2	2,8	25,4	22,7
	.72	.126	.22	.717	3.62	.559	.110	1.00	.89
14S	24,6	3,2	7,9	23,0	93	14,2	3,2	30,0	27,5
	.97	.126	.31	.906	3.66	.559	.126	1.181	1.08
16S	27,4	3,2	11,0	24,6	95	14,2	3,2	32,5	30,0
	1,08	.126	.44	.969	3.74	.559	.126	1.280	1.18
16	27,4	3,2	11,0	24,6	111	19,0	3,2	32,5	30,0
	1.08	.126	.44	.969	4.37	.748	.126	1.280	1.18
18	30,8	3,2	14,2	27,0	111	19,0	4,0	35,0	32,2
	1.21	.126	.56	1.063	4.37	.748	.157	1.378	1.27
20	34,2	3,2	15,8	29,4	111	19,0	4,0	38,0	37,5
	1.35	.126	.63	1.157	4.37	.748	.157	1.496	1.48
22	37,4	3,2	15,8	31,8	111	19,0	4,0	41,0	37,5
	1.47	.126	.63	1.252	4.37	.748	.157	1.614	1.48
24	40,9	3,7	19,0	34,9	113	20,6	4,0	44,5	43,3
	1.61	.146	.75	1.374	4.45	.811	.157	1.752	1.71
28	46,7	3,7	19,0	39,7	121	20,6	4,0	50,8	43,3
	1.84	.146	.75	1.563	4.76	.811	.157	2.000	1.71
32	53,4	4,3	23,8	44,5	123	22,2	4,0	57,0	51,7
	2.10	.169	.94	1.752	4.84	.874	.157	2.244	2.04
36	59,6	4,3	31,7	49,2	125	22,2	4,0	63,5	58,0
	2.35	.169	1.25	1.937	4.92	.874	.157	2.500	2.28
40	65,5	4,3	34,9	55,5	138	22,2	4,0	69,9	68,5
	2.58	.169	1.38	2.185	5.43	.874	.157	2.752	1.69

* Max. permissible outside diameter of cable
Dimensions are mm. over inches

Receptacle with through mounting holes, and long backshell. RL Type has an individual wire sealing grommet. For threaded and countersunk mounting holes, see page 197.

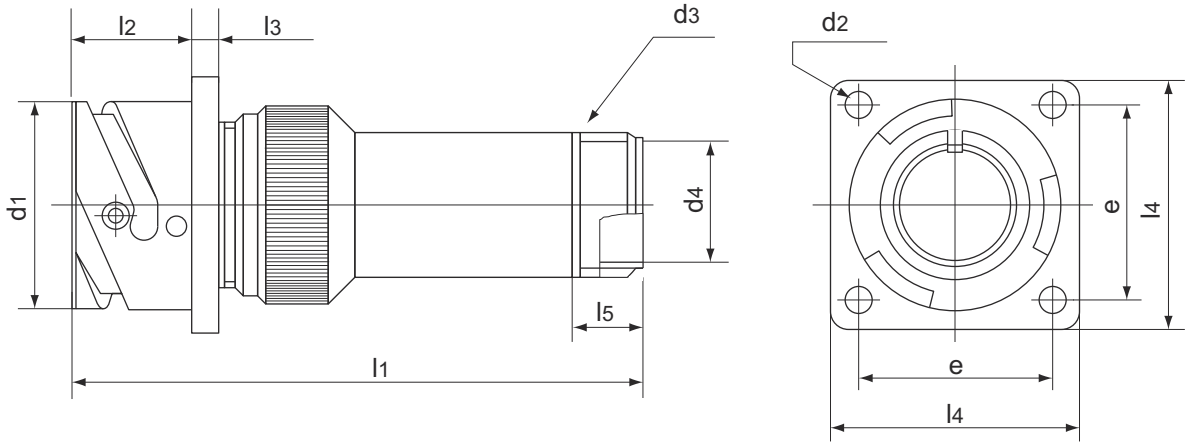

Shell Size	d_1 +0 -0,15	d_2 H13	d_3 Thread in inches	d_4 +0,1 -0	e ±0,1	l_1 max.	l_2 +0,4 -0	l_3 ±0,2	l_4 ±0,3	l_5 min.
10SL	18,2	3,2	5/8-24 UNEF-2A	8,5	18,2	71	14,2	2,8	25,4	9,5
	0.72	.126		.33	.717	2.79	.559	.110	1.00	.37
14S	24,6	3,2	3/4-20 UNEF-2A	11,7	23,0	71	14,2	3,2	30,0	9,5
	0.97	.126		.46	.906	2.79	.559	.126	1.181	.37
16S	27,4	3,2	7/8-20 UNEF-2A	13,9	24,6	71	14,2	3,2	32,5	9,5
	1.08	.126		.55	.969	2.79	.559	.126	1.280	.37
16	27,4	3,2	7/8-20 UNEF-2A	13,9	24,6	87	19,0	3,2	32,5	9,5
	1.08	.126		.55	.969	3.42	.748	.126	1.280	.37
18	30,8	3,2	1”-20 UNEF-2A	16,9	27,0	87	19,0	4,0	35,0	9,5
	1.21	.126		.67	1.063	3.42	.748	.157	1.378	.37
20	34,2	3,2	1”3/16-18 UNEF-2A	20,9	29,4	87	19,0	4,0	38,0	9,5
	1.35	.126		.83	1.157	3.42	.748	.157	1.496	.37
22	37,4	3,2	1”3/16-18 UNEF-2A	20,9	31,8	87	19,0	4,0	41,0	9,5
	1.47	.126		.83	1.252	3.42	.748	.157	1.614	.37
24	40,9	3,7	1”7/16-18 UNEF-2A	25,9	34,9	87	20,6	4,0	44,5	9,5
	1.61	0.146		1.02	1.374	3.42	.811	.157	1.752	.37
28	46,7	3,7	1”7/16-18 UNEF-2A	26,0	39,7	95	20,6	4,0	50,8	9,5
	1.84	0.146		1.02	1.563	3.74	.811	.157	2.000	.37
32	53,4	4,3	1”3/4-18 UNS-2A	32,0	44,5	95	22,2	4,0	57,0	11,0
	2.10	0.169		1.26	1.752	3.74	.874	.157	2.244	.43
36	59,6	4,3	2”-18 UNS-2A	36,9	49,2	95	22,2	4,0	63,5	11,8
	2.35	0.169		1.46	1.937	3.74	.874	.157	2.500	.47
40	65,5	4,3	2”1/4-16 UN-2A	44,9	55,5	95	22,2	4,0	69,9	11,8
	2.58	0.169		1.77	2.185	3.74	.874	.157	2.752	.47

Dimensions are mm. over inches

Receptacle with through mounting holes and an individual wire sealing grommet. For threaded and countersunk mounting holes, see page 197. ARV type has no wire sealing grommet.

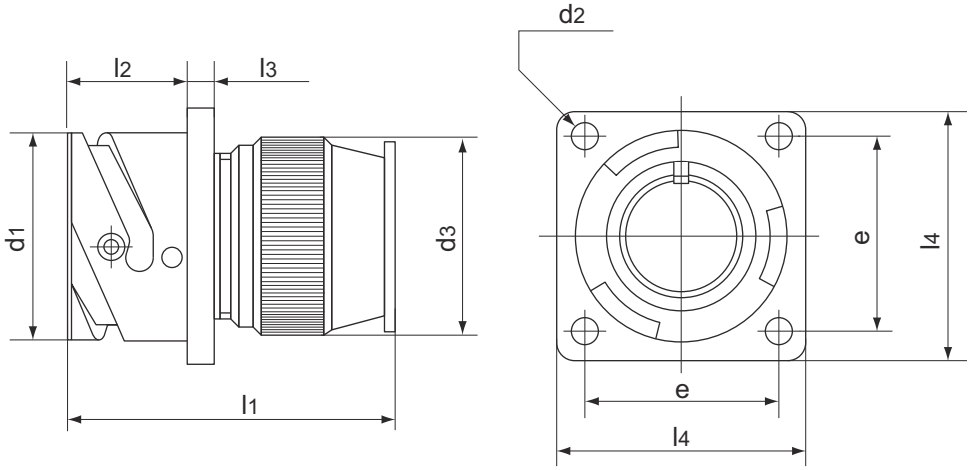

Shell Size	d_1 +0 -0,15	d_2 H13	d_3 max.	e ±0,1	l_1 max.	l_2 +0,4 -0	l_3 ±0,2	l_4 ±0,3
10SL	18,2	3,2	20,0	18,2	40	14,2	2,8	25,4
	0.72	.126	.79	.717	1.57	.559	.110	1.00
14S	24,6	3,2	24,0	23,0	40	14,2	3,2	30,0
	0.97	.126	.95	906	1.57	.559	.126	1.181
16S	27,4	3,2	26,0	24,6	40	14,2	3,2	32,5
	1.08	.126	1.02	.969	1.57	.559	.126	1.280
16	27,4	3,2	26,0	24,6	56	19,0	3,2	32,5
	1.08	.126	1.02	.969	2.20	.748	.126	1.280
18	30,8	3,2	29,5	27,0	56	19,0	4,0	35,0
	1.21	.126	1.16	1.063	2.20	.748	.157	1.378
20	34,2	3,2	33,0	29,4	57	19,0	4,0	38,0
	1.35	.126	1.30	1.157	2.24	.748	.157	1.496
22	37,4	3,2	36,0	31,8	57	19,0	4,0	41,0
	1.47	.126	1.42	1.252	2.24	.748	.157	1.614
24	40,9	3,7	40,0	34,9	59	20,6	4,0	44,5
	1.61	.146	1.58	1.374	2.32	.811	.157	1.752
28	46,7	3,7	46,0	39,7	59	20,6	4,0	50,8
	1.84	.146	1.81	1.563	2.32	.811	.157	2.000
32	53,4	4,3	51,5	44,5	60	22,2	4,0	57,0
	2.10	.169	2.03	1.752	2.36	.874	.157	2.244
36	59,6	4,3	58,0	49,2	60	22,2	4,0	63,5
	2.35	.169	2.28	1.937	2.36	.874	.157	2.500
40	65,5	4,3	64,5	55,5	61	22,2	4,0	69,9
	2.58	.169	2.54	2.185	2.40	.874	.157	2.752

Dimensions are mm. over inches

Receptacle with through mounting holes, individual wire sealing grommet, special backshell for shield braid termination (for shielding characteristics, see page 12). To be used with heat shrinkable tubing. For threaded and countersunk mounting holes, see page 197. ASB type has no wire sealing grommet.

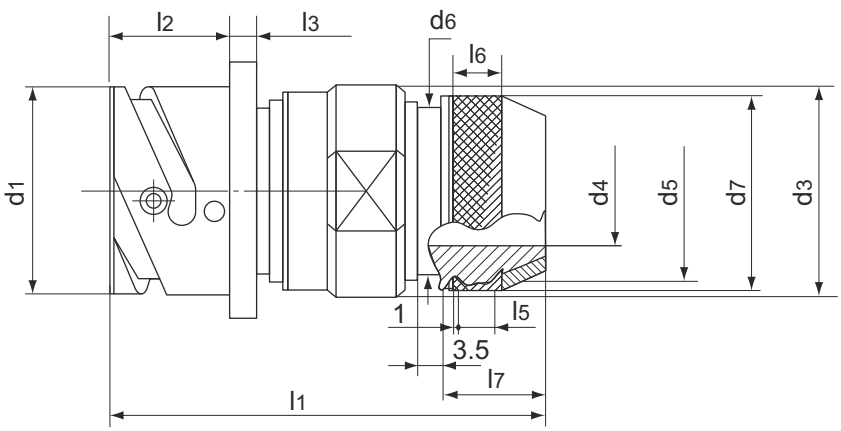

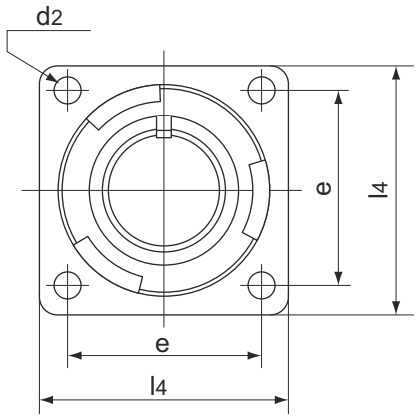

Shell Size	d_1 +0 -0,15	d_2 H13	d_3 max.	d_4 min.	d_5 Thread	d_6 max.	d_7 +0,5 -0	e ±0,1	l_1 * ~	l_2 +0,4 -0	l_3 ±0,2	l_4 ±0,3	l_5 min.	l_6 ±0,5	l_7 ±0,1
10SL	18,2	3,2	22,0	8,6	M16x1	16,3	18,5	18,2	52,2	14,2	2,8	25,4	4,5	5,5	17,0
	0.72	0.126	.87	.34		.64	.73	.717	2.06	.559	.110	1.00	0.17	0.22	.669
14S	24,6	3,2	25,0	10,6	M20x1	20,0	22,0	23,0	52,2	14,2	3,2	30,0	5	7	17,0
	0.97	0.126	.98	.42		.79	.87	.906	2.06	.559	.126	1.181	.20	0.27	.669
16S	27,4	3,2	28,0	13,5	M23x1	23,0	25,0	24,6	54,2	14,2	3,2	32,5	6	8	18,5
	1.08	0.126	1.10	.53		.90	.98	.969	2.13	.559	.126	1.280	0.24	0.31	.728
16	27,4	3,2	28,0	13,5	M23x1	23,0	25,0	24,6	63,3	19,0	3,2	32,5	6	8	18,5
	1.08	0.126	1.10	.53		.90	.98	.969	2.49	.748	.126	1.280	0.24	0.31	.728
18	30,8	3,2	31,0	14,6	M26x1	24,5	28,0	27,0	64,5	19,0	4,0	35,0	6	8	18,5
	1.21	0.126	1.22	.58		.97	1.10	1.063	2.54	.748	0.16	1.378	0.24	0.31	.728
20	34,2	3,2	35,0	18,5	M30x1	28,5	32,0	29,4	64,5	19,0	4,0	38,0	6	10	18,5
	1.35	0.126	1.38	.73		1.12	1.26	1.157	2.54	.748	.157	1.496	0.24	0.39	.728
22	37,4	3,2	38,0	20,8	M32x1	30,5	34,0	31,8	64.5	19,0	4,0	41,0	6	10	18,5
	1.47	0.126	1.50	.82		1.20	1.34	1.252	2.54	.748	.157	1.614	0.24	0.39	.728
24	40,9	3,7	41,0	24,6	M36x1	34,5	38,0	34,9	65,2	20,6	4,0	44,5	6	10	18,5
	1.61	0.146	1.61	.97		1.36	1.50	1.374	2.57	.811	.157	1.752	0.24	0.39	.728
28	46,7	3,7	48,0	27,0	M39x1	37,5	41,0	39,7	65,2	20,6	4,0	50,8	6	10	18,5
	1.84	0.146	1.89	1.06		1.48	1.61	1.563	2.57	.811	.157	2.000	0.24	0.39	.728
32	53,4	4,3	54,0	33,3	M45x1	44,0	48,0	44,5	66,8	22,2	4,0	57,0	6	10	18,5
	2.10	0.169	2.13	1.31		1.73	1.89	1.752	2.63	.874	.157	2.244	0.24	0.39	.728
36	59,6	4,3	61,0	38,5	M52x1	51,0	55,0	49,2	66,8	22,2	4,0	63,5	6	10	18,5
	2.35	0.169	2.40	1.52		2.01	2.17	1.937	2.63	.874	.157	2.500	0.24	0.39	.728
40	65,5	4,3	68,0	46,0	M59x1	58,0	62,0	55,5	66,8	22,2	4,0	69,9	6	10	18,5
	2.58	0.169	2.68	1.81		2.28	2.44	2.185	2.63	.874	.157	2.752	0.24	0.39	.728

* Nominal dimension with tightend backshell
Dimensions are mm. over inches

Inline receptacle with backshell. R type also has an individual wire sealing grommet.

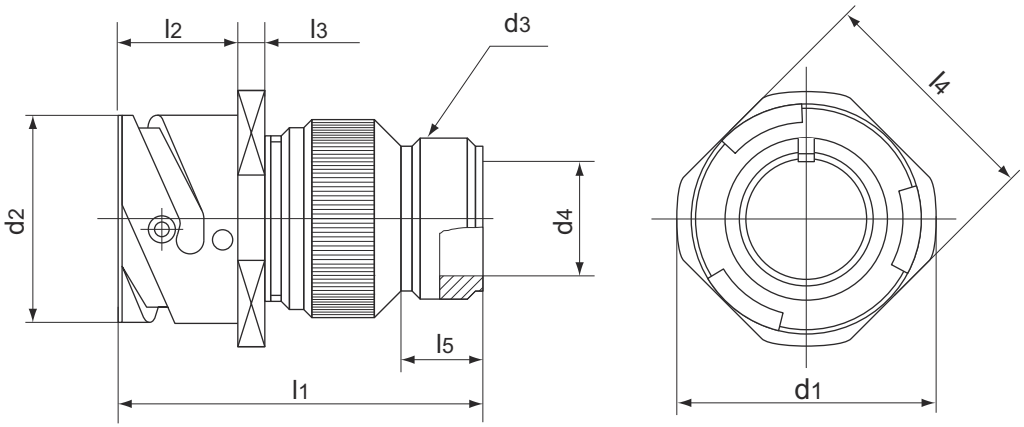

Shell Size	d_1 max.	d_2 +0 -0,15	d_3 Thread in inches	d_4 +0,1 -0	l_1 max.	l_2 +0,4 -0	l_3 ±0,2	l_4 ±0,2	l_5 min.
10SL	25,2	18,2	5/8-24 UNEF-2A	10,4	43	14,2	2,8	20,6	9,5
	.992	.72		.41	1.69	.559	.110	.811	.37
14S	29,8	24,6	3/4-20 UNEF-2A	13,2	47	14,2	3,2	25,4	9,5
	1.173	.97		.52	1.85	.559	.126	1.00	.37
16S	32,3	27,4	7/8-20 UNEF-2A	16,2	47	14,2	3,2	28,6	9,5
	1.272	1.08		.64	1.85	.559	.126	1.126	.37
16	32,3	27,4	7/8-20 UNEF-2A	16,2	58	19,0	3,2	28,6	9,5
	1.272	1.08		.64	2.28	.748	.126	1.126	.37
18	34,8	30,8	1”-20 UNEF-2A	19,2	58	19,0	4,0	31,7	9,5
	1.370	1.21		.76	2.28	.748	.157	1.248	.37
20	37,8	34,2	1”3/16-18 UNEF-2A	22,0	58	19,0	4,0	34,9	9,5
	1.488	1.35		.87	2.28	.748	.157	1.374	.37
22	41,1	37,4	1”3/16-18 UNEF-2A	24,5	59	19,0	4,0	38,1	9,5
	1.618	1.47		.97	2.32	.748	.157	1.500	.37
24	44,6	40,9	1”7/16-18 UNEF-2A	27,8	61	20,6	4,0	41,3	9,5
	1.756	1.61		1.09	2.40	.811	.157	1.626	.37
28	50,9	46,7	1”7/16-18 UNEF-2A	31,2	67	20,6	4,0	47,6	9,5
	2.004	1.84		1.23	2.64	.811	.157	1.874	.37
32	57,1	53,4	1”3/4-18 UNS-2A	37,8	71	22,2	4,0	54,0	11,0
	2.248	2.10		1.49	2.79	.874	.157	2.126	.43
36	63,6	59,6	2”-18 UNS-2A	45.0	71	22,2	4,0	60,6	11,8
	2.504	2.35		1.77	2.79	.874	.157	2.386	.47
40	70.0	65,5	2”1/4-16 UN-2A	51,2	86	22,2	4,0	66,5	11,8
	2.756	2.58		2.02	3.38	.874	.157	2.618	.47

Dimensions are mm. over inches

Inline receptacle with a cable clamp for jacketed cable. CFZ type also has an individual wire sealing grommet.

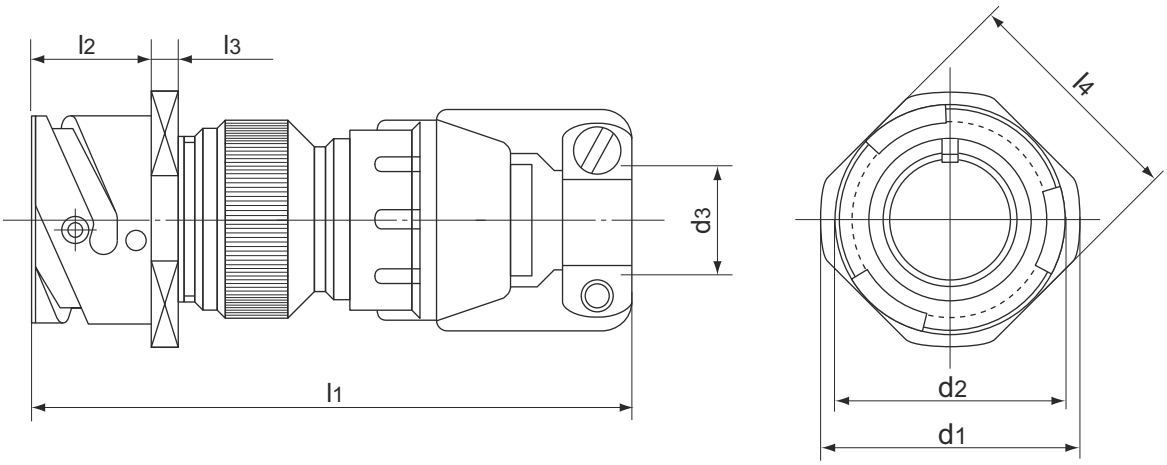

Shell Size	d_1 max.	d_2 +0 -0,15	d_3 open	d_3 closed	l_1 max.	l_2 +0,4 -0	l_3 ±0,2	l_4 ±0,2
10SL	25,2	18,2	7,93	2,38	73	14,2	2,8	20,6
	.992	.72	.312	.094	2.87	.559	.110	.811
14S	29,8	24,6	11,12	6,35	77	14,2	3,2	25,4
	1.173	.97	.438	.25	0.30	.559	.126	1.00
16S	32,3	27,4	13,48	8	77	14,2	3,2	28,6
	1.272	1.08	.531	.315	0.30	.559	.126	1.126
16	32,3	27,4	13,48	8	88	19,0	3,2	28,6
	1.272	1.08	.531	.315	3.49	.748	.126	1.126
18	34,8	30,8	15,87	9,6	91	19,0	4,0	31,7
	1.370	1.21	.625	.375	3.58	.748	.157	1.248
20	37,8	34,2	19,0	11,3	91	19,0	4,0	34,9
	1.488	1.35	.748	.445	3.58	.748	.157	1.374
22	41,1	37,4	19,0	11,3	92	19,0	4,0	38,1
	1.618	1.47	.748	.445	3.62	.748	.157	1.500
24	44,6	40,9	23,8	15,5	97	20,6	4,0	41,3
	1.756	1.61	.938	.610	3.82	.811	.157	1.626
28	50,9	46,7	23,8	15,5	103	20,6	4,0	47,6
	2.004	1.84	.938	.610	4.05	.811	.157	1.874
32	57,1	53,4	31,75	23,4	113	22,2	4,0	54.0
	2.248	2.10	1.250	.921	4.45	.874	.157	2.126
36	63,6	59,6	35,0	23,4	120	22,2	4,0	60,6
	2.504	2.35	1.378	.921	4.72	.874	.157	2.386
40	70,0	65,5	41,25	29,9	135	22,2	4,0	66,5
	2.756	2.58	1.625	1.177	5.31	.874	.157	2.618

Dimensions are mm. over inches

Inline receptacle with an individual wire sealing grommet and cable clamp with a bushing. AF type has no grommet.

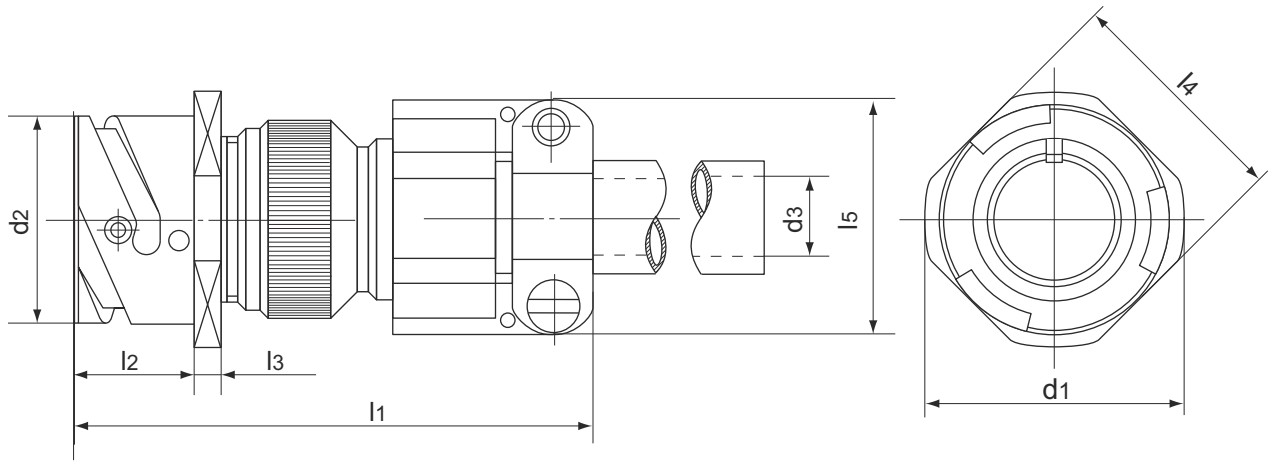

Shell Size	d_1 max.	d_2 +0 -0,15	d_3 * max	l_1 max.	l_2 +0,4 -0	l_3 ±0,2	l_4 ±0,2	l_5 max.
10SL	25,2	18,2	5,6	64	14,2	2,8	20,6	22,7
	.992	0.72	.22	2.52	.559	.110	.811	.89
14S	29,8	24,6	7,9	69	14,2	3,2	25,4	27,5
	1.173	0.97	.31	2.72	.559	.126	1.00	1.08
16S	32,3	27,4	11,0	71	14,2	3,2	28,6	30.0
	1.272	1.08	.44	2.80	.559	.126	1.126	1.18
16	32,3	27,4	11.0	82	19,0	3,2	28,6	30.0
	1.272	1.08	.44	3.23	.748	.126	1.126	1.18
18	34,8	30,8	14,2	82	19,0	4,0	31,7	32,2
	1.370	1.21	.56	3.23	.748	.157	1.248	1.27
20	37,8	34,2	15,8	82	19,0	4,0	34,9	37,5
	1.488	1.35	.63	3.23	.748	.157	1.374	1.48
22	41,1	37,4	15,8	83	19,0	4,0	38,1	37,5
	1.618	1.47	.63	3.27	.748	.157	1.500	1.48
24	44,6	40,9	19,0	87	20,6	4,0	41,3	43,3
	1.756	1.61	.75	3.42	.811	.157	1.626	1.71
28	50,9	46,7	19,0	93	20,6	4,0	47,6	43,3
	2.004	1.84	.75	3.66	.811	.157	1.874	1.71
32	57,1	53,4	23,8	99	22,2	4,0	54,0	51,7
	2.248	2.10	.94	3.90	.874	.157	2.126	2.04
36	63,6	59,6	31,7	100	22,2	4,0	60,6	58,0
	2.504	2.35	1.25	3.94	.874	.157	2.386	2.28
40	70,0	65,5	34,9	128	22,2	4,0	66,5	68,5
	2.756	2.58	1.38	5.04	.874	.157	2.618	2.69

* Max. permissible outside diameter of cable
Dimensions are mm. over inches

Specifications and dimensions subject to change
Dimensions shown in mm.

Inline receptacle with an individual wire sealing grommet and backshell for heat shrinkable tubing. AG type has no grommet.

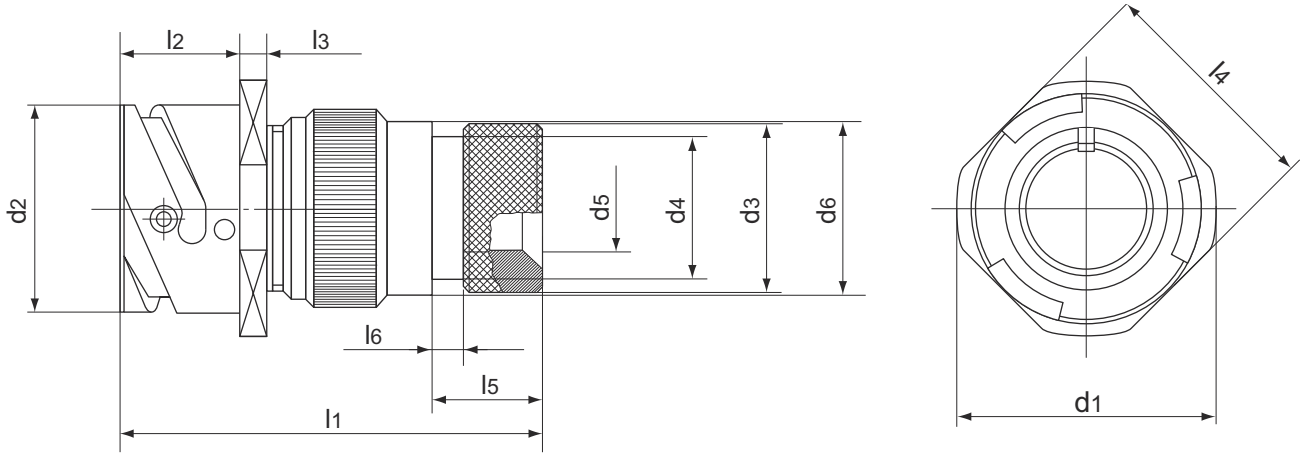

Shell Size	d_1 max.	d_2 +0 -0,15	d_3 ±0,2	d_4 max.	d_5 ±0,1	d_6 ±0,2	l_1 max.	l_2 +0,4 -0	l_3 ±0,2	l_4 ±0,2	l_5 ±0,1	l_6 ±0,1
10SL	25,2	18,2	15,5	13,3	7,9	17.0	48	14,2	2,8	20,6	11,7	3,5
	.992	.72	.610	.52	0.31	.669	1.89	.559	.110	.811	.461	.138
14S	29,8	24,6	19,1	17,0	10,8	20,1	48	14,2	3,2	25,4	11,7	3,5
	1.173	.97	.752	.66	0.42	.791	1.89	.559	.126	1.00	.461	.138
16S	32,3	27,4	23,9	21,9	13,7	23,5	48	14,2	3,2	28,6	11,7	3,5
	1.272	1.08	.941	.86	0.54	.925	1.89	.559	.126	1.126	.461	.138
16	32,3	27,4	23,9	21,9	13,7	23,5	60	19,0	3,2	28,6	11,5	3,5
	1.272	1.08	.941	.86	0.54	.925	2.36	0.75	.126	1.126	.453	.138
18	34,8	30,8	23,9	21,9	14,8	26,5	60	19,0	4,0	31,7	11,5	3,5
	1.370	1.21	.941	.86	0.58	1.043	2.36	.748	.157	1.248	.453	.138
20	37,8	34,2	29,6	26,2	18,9	30,2	65	19,0	4,0	34,9	12,4	3,5
	1.488	1.35	1.165	1.03	0.74	1.189	2.56	.748	.157	1.374	.488	.138
22	41,1	37,4	29,6	26,2	21	33,6	65	19,0	4,0	38,1	12,4	3,5
	1.618	1.47	1.165	1.03	0.83	1.323	2.56	.748	.157	1.500	.488	.138
24	44,6	40,9	37,8	34,5	24,8	36,1	65	20,6	4,0	41,3	12,7	3,5
	1.756	1.61	1.488	1.35	0.98	1.421	2.56	.811	.157	1.626	.500	.138
28	50,9	46,7	37,8	34,5	27,2	41,4	65	20,6	4,0	47,6	12,7	3,5
	2.004	1.84	1.488	1.35	1.07	1.63	2.56	.811	.157	1.874	.500	.138
32	57,1	53,4	47,8	43,6	33,5	48,6	70	22,2	4,0	54.0	15,2	3,5
	2.248	2.10	1.882	1.71	1.32	1.913	2.75	.874	.157	2.126	.598	.138
36	63,6	59,6	47,8	43,6	38,7	54,8	75	22,2	4,0	60,6	15,2	3,5
	2.504	2.35	1.882	1.71	1.52	2.157	2.95	.874	.157	2.386	.598	.138
40	70,0	65,5	57,8	52,6	48,2	60,9	77	22,2	4,0	66,5	15,2	3,5
	2.756	2.58	2.276	2.07	1.90	2.402	3.03	.874	.157	2.618	.610	.138

Dimensions are mm. over inches

Inline receptacle with an individual wire sealing grommet and a two piece swivel backshell for heat shrinkable tubing. AG2 type has no wire sealing grommet.

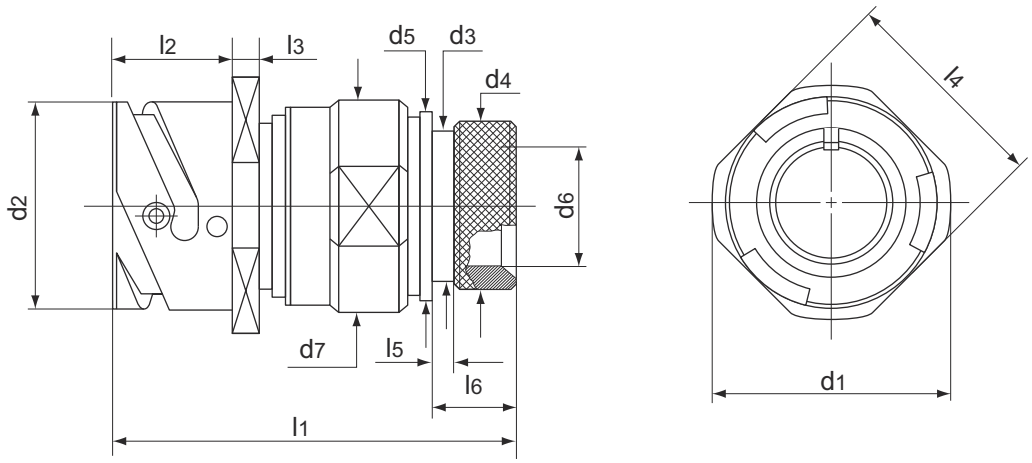

Shell Size	d_1 max	d_2 +0 -0,15	d_3 ±0,1	d_4 —	d_5 ±0,1	d_6 ±0,1	d_7 max.	l_1 * ~	l_2 +0,4 -0	l_3 ±0,2	l_4 ±0,2	l_5 ±0,1	l_6 ±0,1
10SL	25,2	18,2	13	15,5	17.0	8,6	22	49,8	14,2	2,8	20,6	3,5	11,7
	.992	.72	.52	.610	.669	.339	0.87	1.96	.559	.110	.811	.138	.461
14S	29,8	24,6	16,8	19,1	20,1	11,2	25	49,8	14,2	3,2	25,4	3,5	11,7
	1.17	.97	.66	.752	.791	.441	0.98	1.96	.559	.126	1.00	.138	.461
16S	32,3	27,4	21,7	23,9	23,5	14	28	50,6	14,2	3,2	28,6	3,5	11,7
	1.27	1.08	.86	.941	.925	.551	1.10	1.99	.559	.126	1.126	.138	.461
16	32,3	27,4	21,7	23,9	23,5	14	28	60,1	19,0	3,2	28,6	3,5	11,5
	1.27	1.08	.86	.941	.925	.551	1.10	2.37	.748	.126	1.126	.138	.453
18	34,8	30,8	21,7	23,9	26,5	16,4	31	59,6	19,0	4,0	31,7	3,5	11,5
	1.37	1.21	.86	.941	1.043	.646	1.22	2.35	.748	.157	1.248	.138	.453
20	37,8	34,2	26,1	29,6	30,2	19,3	35	60,3	19,0	4,0	34,9	3,5	12,4
	1.49	1.35	1.03	1.165	1.189	.760	1.38	2.37	.748	.157	1.374	.138	.488
22	41,1	37,4	26,1	29,6	33,6	22	38	60,3	19,0	4,0	38,1	3,5	12,4
	1.62	1.47	1.03	1.165	1.323	.866	1.50	2.37	.748	.157	1.500	.138	.488
24	44,6	40,9	34,3	37,8	36,1	25	41	62,9	20,6	4,0	41,3	3,5	12,7
	1.75	1.61	1.35	1.488	1.421	.984	1.61	2.48	.811	.157	1.626	.138	.500
28	50,9	46,7	34,3	37,8	41,4	28	48	64,7	20,6	4,0	47,6	3,5	12,7
	2.0	1.84	1.35	1.488	1.630	1.102	1.89	2.55	.811	.157	1.874	.138	.500
32	57,1	53,4	43,4	47,8	48,6	34,8	54	67	22,2	4,0	54,0	3,5	15,2
	2.25	2.10	1.71	1.882	1.913	1.370	2.12	2.64	.874	.157	2.126	.138	.598
36	63,6	59,6	43,4	47,8	54,8	38,7	61	67	22,2	4,0	60,6	3,5	15,2
	2.50	2.35	1.71	1.882	2.157	1.524	2.40	2.64	.874	.157	2.386	.138	.598
40	70	65,5	52,6	57,8	61.0	48,2	68	67,3	22,2	4,0	66,5	3,5	15,5
	2.75	2.58	2.07	2.276	2.402	1.898	2.68	2.65	.874	.157	2.618	.138	.610

* Nominal dimension with tightened backshell

Dimensions are mm. over inches

Inline receptacle for terminating jacketed cable. Long LC backshell with internal adapter suitable for various sizes of cable, grommet, compression ring and a cord grip included. LCG same as LC but without the wire sealing grommet and compression ring.

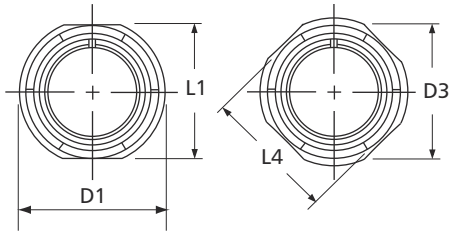

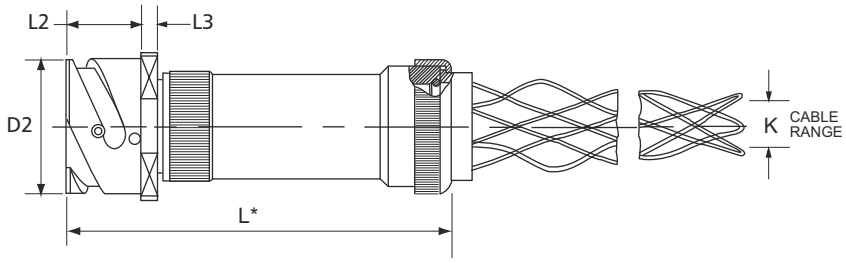

*Dimension "L" will vary from the value indicated with escalating or de-escalating backshells and some special insert configurations. Verify with our Customer Service Department.

Shell Size	D_1 Max.	D_2 Max.	D_3 +/- 0,2 .008	L_1 +/- 0,2 .008	L_2 + 0,4 .016	L_3 +/- 0,2 .008	L_4 +/- 0,2 .008	L Approx.
10SL	22,4	18,2	25,2	18,2	14,2	2,8	20,6	100
	.88	.72	.992	.717	.559	.110	.811	3.94
14S	28,8	24,6	29,8	24,6	14,2	3,2	25,4	100
	1.13	.97	1.173	.969	.559	.126	1.00	3.94
16S	31,6	27,4	32,3	27,4	14,2	3,2	28,6	100
	1.24	1.08	1.272	1.079	.559	.126	1.126	3.94
16	31,6	27,4	32,3	27,4	19,0	3,2	28,6	110
	1.24	1.08	1.272	1.079	.748	.126	1.126	4.33
18	35,0	30,8	34,8	30,8	19,0	4,0	31,7	110
	1.38	1.21	1.370	1.213	.748	.157	1.248	4.33
20	38,1	34,2	37,8	34,2	19,0	4,0	34,9	116
	1.50	1.35	1.488	1.346	.748	.157	1.374	4.57
22	41,1	37,4	41,1	37,4	19,0	4,0	38,1	116
	1.62	1.47	1.618	1.472	.748	.157	1.500	4.57
24	44,6	40,9	44,6	40,9	20,6	4,0	41,3	120
	1.76	1.61	1.756	1.610	.811	.157	1.626	4.72
28	50,9	46,7	50,9	46,7	20,6	4,0	47,6	129
	2.00	1.84	2.004	1.839	.811	.157	1.874	5.08
32	57,1	53,4	57,1	53,4	22,2	4,0	54,0	145
	2.25	2.10	2.248	2.102	8.74	.157	2.126	5.71
36	63,6	59,6	63,6	59,6	22,2	4,0	60,6	145
	2.50	2.35	2.504	2.346	8.74	.157	2.386	5.71
40	69,7	65.5	70,0	65,5	22,2	4,0	66,5	145
	2.74	2.58	2.756	2.579	8.74	.157	2.618	5.71

K Suffix in Connector Part Number	K Cable Range Min.	K Cable Range Max.
K0	6,35	9,53
	.250	.375
K1	9,53	12,7
	.375	.500
K2	12,7	15,87
	.500	.625
K3	15,87	19,05
	.625	.750
K4	19,05	22,23
	.750	.875
K5	22,23	25,4
	.875	1.000
K6	25,4	28,45
	1.000	1.120
K7	28,45	31,75
	1.120	1.250
K8	32,77	38,1
	1.290	1.500
K9	39.62	41,28
	1.560	1.625
K10	41.28	44,45
	1.625	1.750

Dimensions are mm. over inches

Inline receptacle with a long backshell and cable clamp for jacketed cables. LCFZ type also has an individual wire sealing grommet.

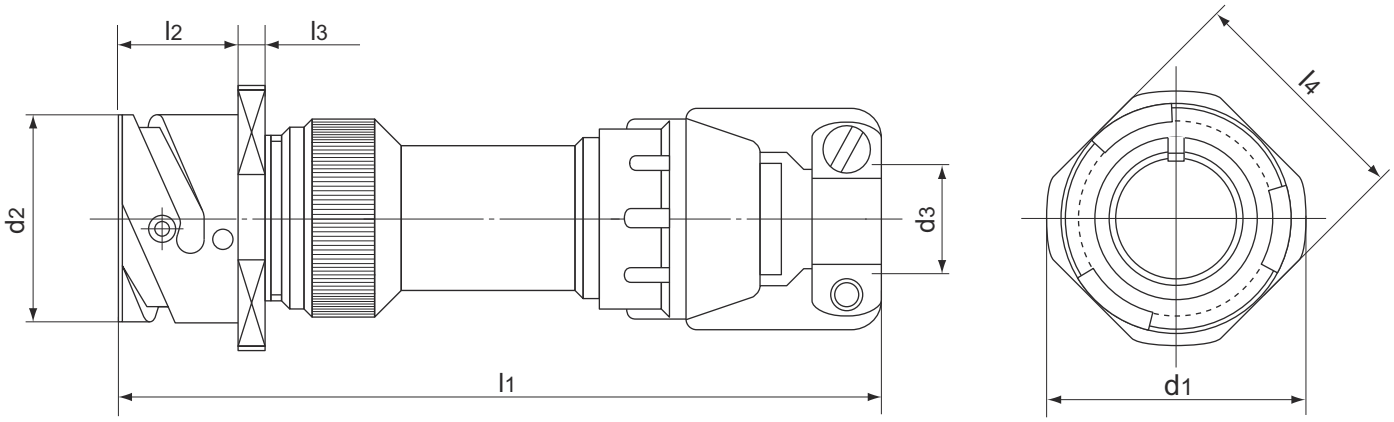

Shell Size	d_1 max.	d_2 +0 -0,15	d_3 open	d_3 closed	l_1 max.	l_2 +0,4 -0	l_3 ±0,2	l_4 ±0,2
10SL	25,2	18,2	7,93	2,38	101	14,2	2,8	20,6
	0.99	0.72	.312	.094	3.98	0.56	0.11	0.81
14S	29,8	24,6	11,12	6,35	101	14,2	3,2	25,4
	1.17	0.97	.438	.25	3.98	0.56	0.12	1.0
16S	32,3	27,4	13,48	8	101	14,2	3,2	28,6
	1.27	1.08	.531	.315	3.98	0.56	0.12	1.12
16	32,3	27,4	13,48	8	114	19	3,2	28,6
	1.27	1.08	.531	.315	4.49	0.75	0.12	1.12
18	34,8	30,8	15,87	9,6	119	19	4	31,7
	1.37	1.21	.625	.375	4.68	0.75	0.16	1.25
20	37,8	34,2	19,0	11,3	119	19	4	34,9
	1.49	1.35	.748	.445	4.68	0.75	0.16	1.37
22	41,1	37,4	19.0	11,3	119	19	4	38,1
	1.62	1.47	.748	.445	4.68	0.75	0.16	1.5
24	44,6	40,9	23,8	15,5	124	20,6	4	41,3
	1.75	1.61	.938	.610	4.88	0.81	0.16	1.62
28	50,9	46,7	23,8	15,5	130	20,6	4	47,6
	2.0	1.84	.938	.610	5.12	0.81	0.16	1.87
32	57,1	53,4	31,75	23,4	137	22,2	4	54
	2.25	2.10	1.250	.921	5.39	0.87	0.16	2.12
36	63,6	59,6	35	23,4	144	22,2	4	60,6
	2.50	2.35	1.378	.921	5.67	0.87	0.16	2.38
40	70	65,5	41,25	29,9	144	22,2	4	66,5
	2.75	2.58	1.625	1.177	5.67	0.87	0.16	2.62

Dimensions are mm. over inches

Inline receptacle with a long backshell and cable clamp with bushing. LF type also has an individual wire sealing grommet.

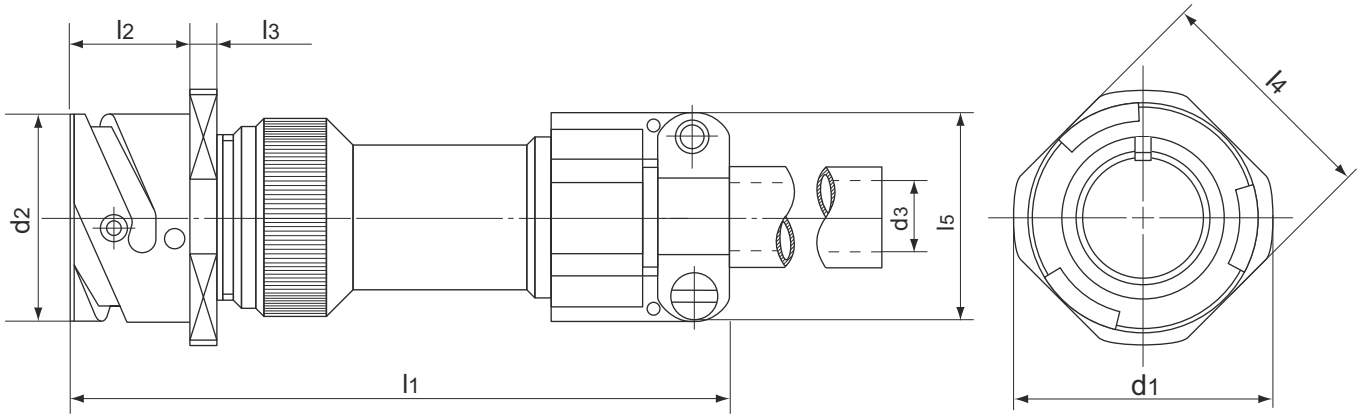

Shell Size	d_1 max.	d_2 +0 -0,15	d_3 * max	l_1 max.	l_2 +0,4 -0	l_3 ±0,2	l_4 ±0,2	l_5 max.
10SL	25,2	18,2	5,6	92	14,2	2,8	20,6	22,7
	0.99	0.72	0.22	3.62	0.56	0.11	0.81	0.89
14S	29,8	24,6	7,9	93	14,2	3,2	25,4	27,5
	1.17	0.97	0.31	3.66	0.56	0.12	1.00	1.08
16S	32,3	27,4	11	95	14,2	3,2	28,6	30
	1.27	1.08	0.43	3.74	0.56	0.12	1.12	1.18
16	32,3	27,4	11	111	19	3,2	28,6	30
	1.27	1.08	0.43	4.37	0.75	0.12	1.12	1.18
18	34,8	30,8	14,2	111	19	4	31,7	32,2
	1.37	1.21	0.56	4.37	0.75	0.16	1.25	1.27
20	37,8	34,2	15,8	111	19	4	34,9	37,5
	1.49	1.35	0.62	4.37	0.75	0.16	1.37	1.48
22	41,1	37,4	15,8	111	19	4	38,1	37,5
	1.62	1.47	0.62	4.37	0.75	0.16	1.50	1.48
24	44,6	40,9	19	113	20,6	4	41,3	43,3
	1.75	1.61	0.75	4.45	0.81	0.16	1.62	1.70
28	50,9	46,7	19	121	20,6	4	47,6	43,3
	2.00	1.84	0.75	4.76	0.81	0.16	1.87	1.70
32	57,1	53,4	23,8	123	22,2	4	54	51,7
	2.25	2.10	0.94	4.84	0.87	0.16	2.12	2.03
36	63,6	59,6	31,7	125	22,2	4	60,6	58
	2.50	2.35	1.25	4.92	0.87	0.16	2.38	2.28
40	70	65,5	34,9	138	22,2	4	66,5	68,5
	2.75	2.58	1.37	5.43	0.87	0.16	2.62	2.70

* Max. permissible outside diameter of cable.
Dimensions are mm. over inches

Inline receptacle for terminating conduit. Straight long RK backshell with adapter and backnut assembly to seal and grip on the jacket of a steel core flexible *EF type Anaconda sealtite conduit*. A wire sealing grommet and compression ring is included. ARK same as RK but without a grommet or compression ring.

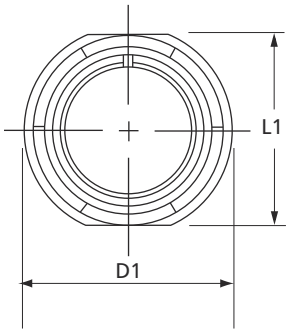

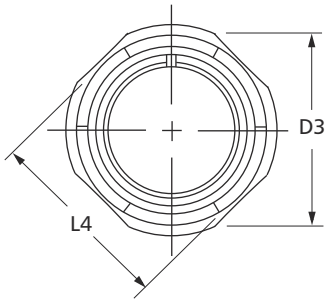

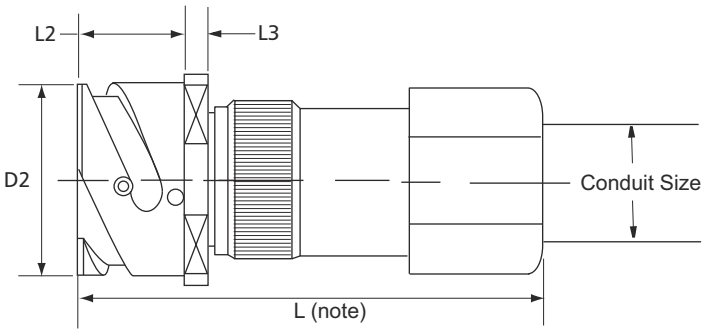

Note: Dimension "L" is dependent on conduit size used with each shell size. Please consult our Customer Service Department.

Shell Size	D_1 Max.	D_2 Max.	D_3 +/- 0,2 .008	L_1 +/- 0,2 .008	L_2 + 0,4 .016	L_3 +/- 0,2 .008	L_4 +/- 0,2 .008
10SL	22,4 .88	18,2 .72	25,2 .992	18,2 .717	14,2 .559	2,8 .110	20,6 .811
14S	28,8 1.13	24,6 .97	29,8 1.173	24,6 .969	14,2 .559	3,2 .126	25,4 1.00
16S	31,6 1.24	27,4 1.08	32,3 1.272	27,4 1.079	14,2 .559	3,2 .126	28,6 1.126
16	31,6 1.24	27,4 1.08	32,3 1.272	27,4 1.079	19,0 .748	3,2 .126	28,6 1.126
18	35,0 1.38	30,8 1.21	34,8 1.370	30,8 1.213	19,0 .748	4,0 .157	31,7 1.248
20	38,1 1.50	34,2 1.35	37,8 1.488	34,2 1.346	19,0 .748	4,0 .157	34,9 1.374
22	41,1 1.62	37,4 1.47	41,1 1.618	37,4 1.472	19,0 .748	4,0 .157	38,1 1.500
24	44,6 1.76	40,9 1.61	44,6 1.756	40,9 1.610	20,6 .811	4,0 .157	41,3 1.626
28	50,9 2.00	46,7 1.84	50,9 2.004	46,7 1.839	20,6 .811	4,0 .157	47,6 1.874
32	57,1 2.25	53,4 2.10	57,1 2.248	53,4 2.102	22,2 8.74	4,0 .157	54,0 2.126
36	63,6 2.50	59,6 2.35	63,6 2.504	59,6 2.346	22,2 8.74	4,0 .157	60,6 2.386
40	69,7 2.74	65.5 2.58	70,0 2.756	65,5 2.579	22,2 8.74	4,0 .157	66,5 2.618

Conduit (EF Type) Trade Size	Suffix in Connector Part Number
3/8	(038)
1/2	(050)
3/4	(075)
1	(100)
1 1/4	(125)
1 1/2	(150)
2	(200)

Dimensions are mm. over inches

Specifications and dimensions subject to change
Dimensions shown in mm.

Inline receptacle with a long backshell. RL and LR type have an individual wire sealing grommet.

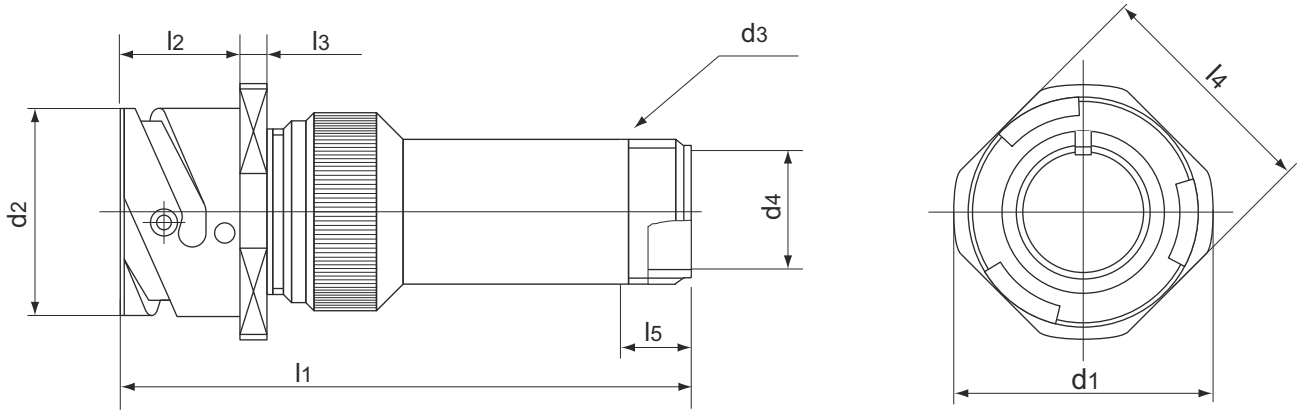

Shell Size	d_1 max.	d_2 +0 -0,15	d_3 Thread in inches	d_4 +0,1 -0	l_1 max.	l_2 +0,4 -0	l_3 ±0,2	l_4 ±0,2	l_5 min.
10SL	25,2	18,2	5/8-24 UNEF-2A	8,5	71	14,2	2,8	20,6	9,5
	0.99	0.72		0.33	2.79	0.56	0.11	0.81	0.37
14S	29,8	24,6	3/4-20 UNEF-2A	11,7	71	14,2	3,2	25,4	9,5
	1.17	0.97		0.46	2.79	0.56	0.12	1.0	0.37
16S	32,3	27,4	7/8-20 UNEF-2A	13,9	71	14,2	3,2	28,6	9,5
	1.27	1.08		0.55	2.79	0.56	0.12	1.12	0.37
16	32,3	27,4	7/8-20 UNEF-2A	13,9	87	19	3,2	28,6	9,5
	1.27	1.08		0.55	3.42	0.75	0.12	1.12	0.37
18	34,8	30,8	1”-20 UNEF-2A	16,9	87	19	4	31,7	9,5
	1.37	1.21		0.66	3.42	0.75	0.16	1.25	0.37
20	37,8	34,2	1”3/16-18 UNEF-2A	20,9	87	19	4	34,9	9,5
	1.49	1,35		0.82	3.42	0.75	0.16	1.37	0.37
22	41,1	37,4	1”3/16-18 UNEF-2A	20,9	87	19	4	38,1	9,5
	1.62	1.47		0.82	3.42	0.75	0.16	1.5	0.37
24	44,6	40,9	1”7/16-18 UNEF-2A	25,9	87	20,6	4	41,3	9,5
	1.75	1.61		1.02	3.42	0.81	0.16	1.62	0.37
28	50,9	46,7	1”7/16-18 UNEF-2A	25,9	95	20,6	4	47,6	9,5
	2.0	1.84		1.02	3.74	0.81	0.16	1.87	0.37
32	57,1	53,4	1”3/4-18 UNS-2A	32	95	22,2	4	54	11
	2.25	2.10		1.26	3.74	0.87	0.16	2.12	0.43
36	63,6	59,6	2”-18 UNS-2A	36,9	95	22,2	4	60,6	11,8
	2.50	2.35		1.45	3.74	0.87	0.16	2.38	0.46
40	70	65,5	2”1/4-16 UN-2A	44,9	95	22,2	4	66,5	11,8
	2.75	2.58		1.77	3.74	0.87	0.16	2.62	0.46

Dimensions are mm. over inches

Inline receptacle with an individual wire sealing grommet and a short backshell. ARV type has no wire sealing grommet.

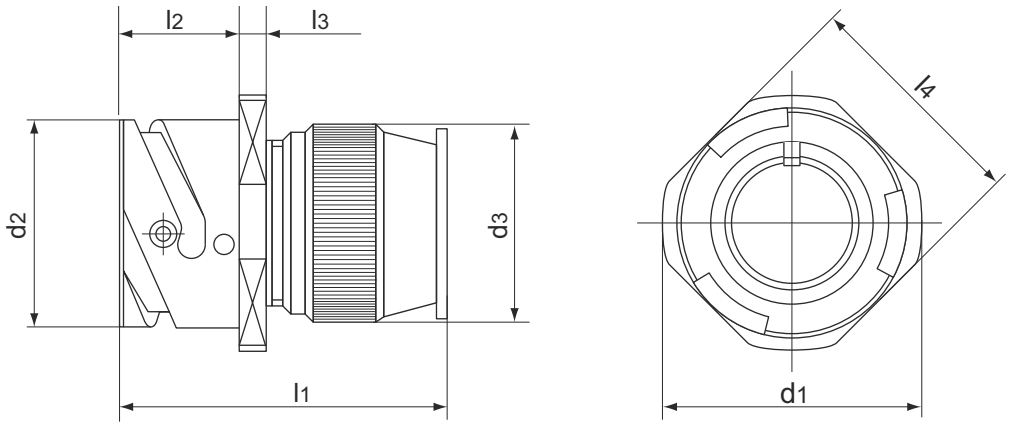

Shell Size	d_1 max.	d_2 +0 -0,15	d_3 max	l_1 max.	l_2 +0,4 -0	l_3 ±0,2	l_4 ±0,2
10SL	25,2	18,2	20	40	14,2	2,8	20,6
	0.99	0.72	0.79	1.57	0.56	0.11	0.81
14S	29,8	24,6	24	40	14,2	3,2	25,4
	1.17	0.97	0.94	1.57	0.56	0.12	1.0
16S	32,3	27,4	26	40	14,2	3,2	28,6
	1.27	1.08	1.02	1.57	0.56	0.12	1.12
16	32,3	27,4	26	56	19	3,2	28,6
	1.27	1.08	1.02	2.20	0.75	0.12	1.12
18	34,8	30,8	29,5	56	19	4	31,7
	1.37	1.21	1.16	2.20	0.75	0.16	1.25
20	37,8	34,2	33	57	19	4	34,9
	1.49	1.35	1.30	2.24	0.75	0.16	1.37
22	41,1	37,4	36	57	19	4	38,1
	1.62	1.47	1.42	2.24	0.75	0.16	1.5
24	44,6	40,9	40	59	20,6	4	41,3
	1.75	1.61	1.57	2.32	0.81	0.16	1.62
28	50,9	46,7	46	59	20,6	4	47,6
	2.0	1.84	1.81	2.32	0.81	0.16	1.87
32	57,1	53,4	51,5	60	22,2	4	54
	2.25	2.10	2.03	2.36	0.87	0.16	2.12
36	63,6	59,6	58	60	22,2	4	60,6
	2.50	2.35	2.28	2.36	0.87	0.16	2.38
40	70	65,5	64,5	61	22,2	4	66,5
	2.75	2.58	2.54	2.40	0.87	0.16	2.62

Dimensions are mm. over inches

Inline receptacle with an individual wire sealing grommet and special backshell for shield braid termination (for shielding characteristics, see page 12). To be used with heat shrinkable tubing. ASB type has no wire sealing grommet.

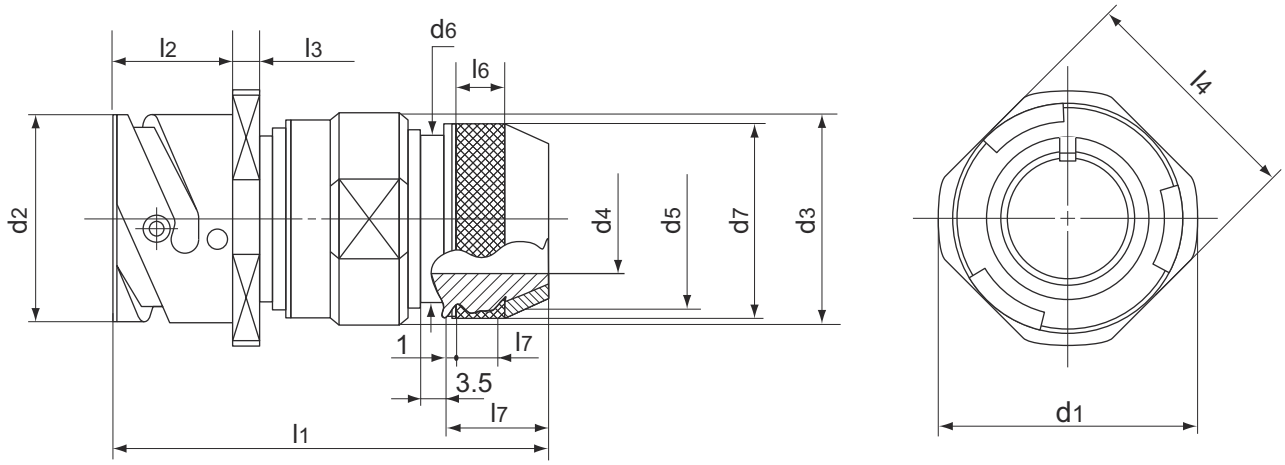

Shell Size	d_1 max.	d_2 +0 -0,15	d_3 max.	d_4 min.	d_5 Thread	d_6 max.	d_7 +0,5 -0	l_1 * ~	l_2 +0,4 -0	l_3 ±0,2	l_4 ±0,2	l_5 min.	l_6 ±0,5	l_7 ±0,1
10SL	25,2	18,2	22	8,6	M16x1	16,3	18,5	52,2	14,2	2,8	20,6	4,5	5,5	17
	0.99	0.72	0.87	0.34		0.64	0.73	2.05	0.56	0.11	0.81	0.18	0.22	0.67
14S	29,8	24,6	25	10,6	M20x1	20	22	52,2	14,2	3,2	25,4	5	7	17
	1.17	0.97	0.98	0.42		0.79	0.87	2.05	0.56	0.12	1.0	.20	0.27	0.67
16S	32,3	27,4	28	13,5	M23x1	23	25	54,2	14,2	3,2	28,6	6	8	18,5
	1.27	1.08	1.10	0.53		0.90	0.98	2.13	0.56	0.12	1.12	0.24	0.31	0.73
16	32,3	27,4	28	13,5	M23x1	23	25	63,3	19	3,2	28,6	6	8	18,5
	1.27	1.08	1.10	0.53		0.90	0.98	2.49	0.75	0.12	1.12	0.24	0.31	0.73
18	34,8	30,8	31	14,6	M26x1	24,5	28	64,5	19	4	31,7	6	8	18,5
	1.37	1.21	1.22	0.57		0.96	1.10	2.54	0.75	0.16	1.25	0.24	0.31	0.73
20	37,8	34,2	35	18,5	M30x1	28,5	32	64,5	19	4	34,9	6	10	18,5
	1.49	1.35	1.38	0.73		1.12	1.26	2.54	0.75	0.16	1.37	0.24	0.39	0.73
22	41,1	37,4	38	20,8	M32x1	30,5	34	64,5	19	4	38,1	6	10	18,5
	1.62	1.47	1.50	0.82		1.20	1.34	2.54	0.75	0.16	1.50	0.24	0.39	0.73
24	44,6	40,9	41	24,6	M36x1	34,5	38	65,2	20,6	4	41,3	6	10	18,5
	1.75	1.61	1.61	0.97		1.36	1.50	2.57	0.81	0.16	1.62	0.24	0.39	0.73
28	50,9	46,7	48	27	M39x1	37,5	41	65,2	20,6	4	47,6	6	10	18,5
	2.00	1.84	1.89	1.06		1.48	1.61	2.57	0.81	0.16	1.87	0.24	0.39	0.73
32	57,1	53,4	54	33,3	M45x1	44	48	66,8	22,2	4	54	6	10	18,5
	2.25	2.10	2.12	1.31		1.73	1.89	2.63	0.87	0.16	2.12	0.24	0.39	0.73
36	63,6	59,6	61	38,5	M52x1	51	55	66,8	22,2	4	60,6	6	10	18,5
	2.50	2.35	2.40	1.51		2.00	2.16	2.63	0.87	0.16	2.38	0.24	0.39	0.73
40	70	65,5	68	46	M59x1	58	62	66,8	22,2	4	66,5	6	10	18,5
	2.75	2.58	2.68	1.81		2.28	2.44	2.63	0.87	0.16	2.62	0.24	0.39	0.73

* Nominal dimension with tightend backshell
Dimensions are mm. over inches

Inline receptacle for terminating braided shield. Straight backshell with a swivel coupling nut and adapter suitable for use with heat shrink tubing or boot. The backshell includes a knurled extension for the shield termination via a tinel lock ring (not included). ASBT same as SBT but without a grommet.

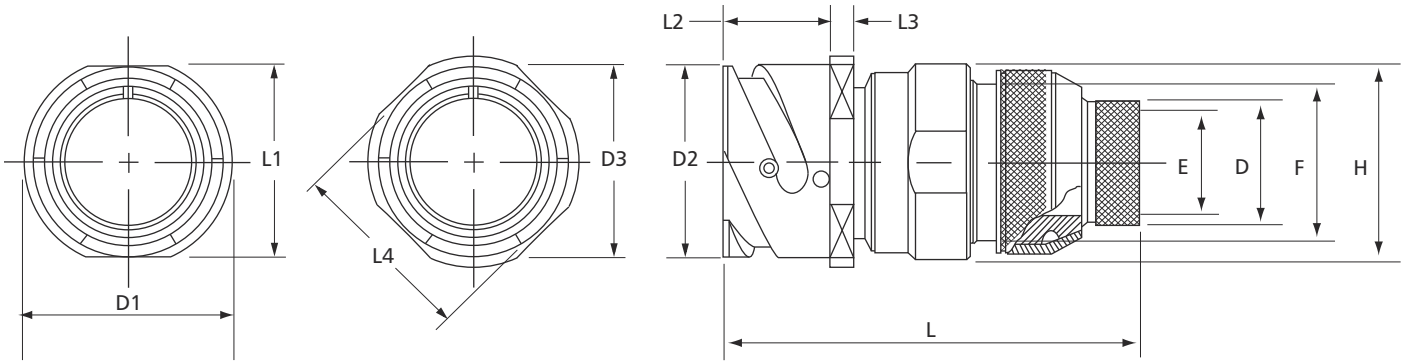

Shell Size	D_1 Max.	D_2 Max.	D_3 +/- 0,2 .008	L_1 +/- 0,2 .008	L_2 + 0,4 .016	L_3 +/- 0,2 .008	L_4 +/- 0,2 .008	H +/- 0,5 .020	G	F	E +/- 0,25 .010	D Max.	CIR01,00 Approx.	Tinel Ring P/N
10SL	22,4	18,2	25,2	18,2	14,2	2,8	20,6	22,0	18,5	16,3	7,9	11,13	61,1	TR 05
	.88	.72	.992	.717	.559	.110	.811	.866	.73	.64	.312	.44	2.41	
14S	28,8	24,6	29,8	24,6	14,2	3,2	25,4	24,8	22,0	20,0	11,1	14,3	61,1	TR 07
	1.13	.97	1.173	.969	.559	.126	1.00	.976	.87	.79	.437	.56	2.41	
16S	31,6	27,4	32,3	27,4	14,2	3,2	28,6	27,8	25,0	23,0	12,7	15,9	63,1	TR 08
	1.24	1.08	1.272	1.079	.559	.126	1.126	1.094	.98	.91	.500	.63	2.48	
16	31,6	27,4	32,3	27,4	19,0	3,2	28,6	27.8	25,0	23,0	12,7	15,9	72,2	TR 08
	1.24	1.08	1.272	1.079	.748	.126	1.126	1.094	.98	.91	.500	.63	2.84	
18	35,0	30,8	34,8	30,8	19,0	4,0	31,7	30,8	28,0	24,5	15,88	19,1	73,4	TR 10
	1.38	1.21	1.370	1.213	.748	.157	1.248	1.213	1.10	.97	.625	.75	2.89	
20	38,1	34,2	37,8	34,2	19,0	4,0	34,9	34,8	32,0	28.5	19,05	22,3	74,6	TR 12
	1.50	1.35	1.488	1.346	.748	.157	1.374	1.370	1.26	1.12	.750	.88	2.94	
22	41,1	37,4	41,1	37,4	19,0	4,0	38,1	37,8	34,0	30,5	22,2	25,4	73,9	TR 14
	1.62	1.47	1.618	1.472	.748	.157	1.500	1.488	1.34	1.20	.875	1.00	2.91	
24	44,6	40,9	44,6	40,9	20,6	4,0	41,3	40,8	38,0	34,5	25,4	28,7	74,1	TR 16
	1.76	1.61	1.756	1.610	.811	.157	1.626	1.606	1.50	1.36	1.00	1.13	2.92	
28	50,9	46,7	50,9	46,7	20,6	4,0	47,6	47,8	41,0	37,5	28,58	31,75	75,3	TR 18
	2.00	1.84	2.004	1.839	.811	.157	1.874	1.881	1.61	1.48	1.125	1.25	2.96	
32	57,1	53,4	57,1	53,4	22,2	4,0	54,0	53,8	48,0	44,0	28,58	31,75	76,9	TR 18
	2.25	2.10	2.248	2.102	8.74	.157	2.126	2.118	1.89	1.73	1.125	1.25	3.03	
36	63,6	59,6	63,6	59,6	22,2	4,0	60,6	60,8	55,0	51,0	41,28	44,45	75,7	Not Available
	2.50	2.35	2.504	2.346	8.74	.157	2.386	2.394	2.17	2.01	1.625	1.75	2.98	
40	69,7	65.5	70,0	65,5	22,2	4,0	66,5	67,8	62,0	58,0	47,63	50,8	75,7	Not Available
	2.74	2.58	2.756	2.579	8.74	.157	2.618	2.669	2.44	2.28	1.875	2.00	2.98	

Dimensions are mm. over inches

Inline receptacle for terminating jacketed cable. Long metal backshell and non-metalic fitting with PG thread. SL1 same as SL but includes a wire sealing grommet and compression ring.

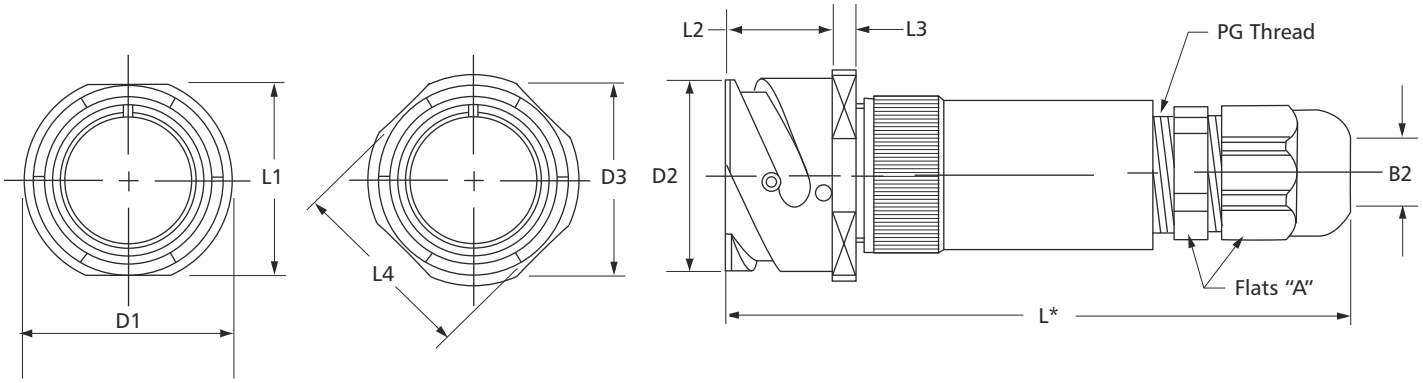

Shell Size	D_1 Max.	D_2 Max.	D_3 +/- 0,2 .008	L_1 +/- 0,2 .008	L_2 + 0,4 .016	L_3 +/- 0,2 .008	L_4 +/- 0,2 .008
10SL	22,4 .88	18,2 .72	25,2 .992	18,2 .717	14,2 .559	2,8 .110	20,6 .811
14S	28,8 1.13	24,6 .97	29,8 1.173	24,6 .969	14,2 .559	3,2 .126	25,4 1.00
16S	31,6 1.24	27,4 1.08	32,3 1.272	27,4 1.079	14,2 .559	3,2 .126	28,6 1.126
16	31,6 1.24	27,4 1.08	32,3 1.272	27,4 1.079	19,0 .748	3,2 .126	28,6 1.126
18	35,0 1.38	30,8 1.21	34,8 1.370	30,8 1.213	19,0 .748	4,0 .157	31,7 1.248
20	38,1 1.50	34,2 1.35	37,8 1.488	34,2 1.346	19,0 .748	4,0 .157	34,9 1.374
22	41,1 1.62	37,4 1.47	41,1 1.618	37,4 1.472	19,0 .748	4,0 .157	38,1 1.500
24	44,6 1.76	40,9 1.61	44,6 1.756	40,9 1.610	20,6 .811	4,0 .157	41,3 1.626
28	50,9 2.00	46,7 1.84	50,9 2.004	46,7 1.839	20,6 .811	4,0 .157	47,6 1.874
32	57,1 2.25	53,4 2.10	57,1 2.248	53,4 2.102	22,2 8.74	4,0 .157	54,0 2.126
36	63,6 2.50	59,6 2.35	63,6 2.504	59,6 2.346	22,2 8.74	4,0 .157	60,6 2.386
40	69,7 2.74	65.5 2.58	70,0 2.756	65,5 2.579	22,2 8.74	4,0 .157	66,5 2.618

B2 Suffix in Connector Part No.	B2 Cable Range Min.	B2 Cable Range Max.	B2 Suffix in Connector Part No.	B2 Cable Range Min.	B2 Cable Range Max.	Thread Size	A Wrench Flats
(07)	3,00 .118	6,48 .255	(07R)	2,00 .079	5,00 .197	PG-7	15,01 .591
(09)	3,99 .157	7,98 .314	(09R)	2,00 .079	5,99 .236	PG-9	19,05 .750
(11)	5,00 .197	10,0 .394	(11R)	3,00 .118	7,09 .279	PG-11	22,00 .866
(13)	5,99 .236	11,99 .472	(13R)	8,66 .341	8,97 .353	PG-13	24,13 .950
(16)	10,0 .394	13,99 .551	(16R)	10,74 .423	12,22 .481	PG-16	27,00 1.063
(21)	13,84 .545	18,00 .709	(21R)	12,22 .481	15,67 .617	PG-21	32,99 1.299
(29)	17,98 .708	24,99 .984	(29R)	13,00 .512	19,99 .787	PG-29	42,01 1.654
(36)	22,0 .866	31,98 1.259	(36R)	19,99 .787	25,99 1,023	PG-36	53,00 2.087
(42)	31,98 1.259	38,00 1.496	(42R)	24,00 .945	30,99 1.220	PG-42	59.99 2.362
(48)	36,98 1.456	43,99 1.732	(48R)	28,98 1.141	35,00 1.378	PG-48	64,99 2.559

*Dimension "L" is dependent on the backshell, the cable range and the fitting used. Verify with our Customer Service Department.

Dimensions are mm. over inches

Inline receptacle for terminating jacketed cable. Long metal backshell and non-metalic spiral fitting with PG thread (to prevent sharp angle bending). SLX1 same as SLX but includes a wire sealing grommet and compression ring.

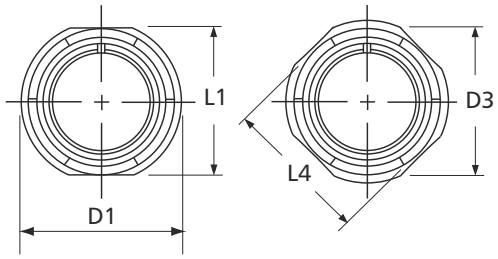

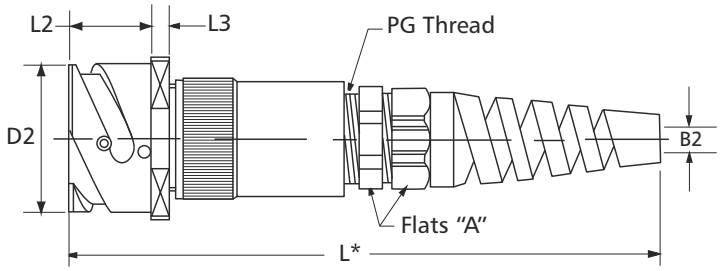

*Dimension "L" is dependent on the backshell, the cable range and the fitting used. Verify with our Customer Service Department.

Shell Size	D_1 Max.	D_2 Max.	D_3 +/- 0,2 .008	L_1 +/- 0,2 .008	L_2 + 0,4 .016	L_3 +/- 0,2 .008	L_4 +/- 0,2 .008
10SL	22,4	18,2	25,2	18,2	14,2	2,8	20,6
	.88	.72	.992	.717	.559	.110	.811
14S	28,8	24,6	29,8	24,6	14,2	3,2	25,4
	1.13	.97	1.173	.969	.559	.126	1.00
16S	31,6	27,4	32,3	27,4	14,2	3,2	28,6
	1.24	1.08	1.272	1.079	.559	.126	1.126
16	31,6	27,4	32,3	27,4	19,0	3,2	28,6
	1.24	1.08	1.272	1.079	.748	.126	1.126
18	35,0	30,8	34,8	30,8	19,0	4,0	31,7
	1.38	1.21	1.370	1.213	.748	.157	1.248
20	38,1	34,2	37,8	34,2	19,0	4,0	34,9
	1.50	1.35	1.488	1.346	.748	.157	1.374
22	41,1	37,4	41,1	37,4	19,0	4,0	38,1
	1.62	1.47	1.618	1.472	.748	.157	1.500
24	44,6	40,9	44,6	40,9	20,6	4,0	41,3
	1.76	1.61	1.756	1.610	.811	.157	1.626
28	50,9	46,7	50,9	46,7	20,6	4,0	47,6
	2.00	1.84	2.004	1.839	.811	.157	1.874
32	57,1	53,4	57,1	53,4	22,2	4,0	54,0
	2.25	2.10	2.248	2.102	8.74	.157	2.126
36	63,6	59,6	63,6	59,6	22,2	4,0	60,6
	2.50	2.35	2.504	2.346	8.74	.157	2.386
40	69,7	65.5	70,0	65,5	22,2	4,0	66,5
	2.74	2.58	2.756	2.579	8.74	.157	2.618

B2 Suffix in Connector Part No.	B2 Cable Range Min.	B2 Cable Range Max.	B2 Suffix in Connector Part No.	B2 Cable Range Min.	B2 Cable Range Max.	Thread Size	A Wrench Flats
(07)	3,00	6,48	(07R)	2,00	5,00	PG-7	15,01
	.118	.255		.079	.197		.591
(09)	3,99	7,98	(09R)	2,00	5,99	PG-9	19,05
	.157	.314		.079	.236		.750
(11)	5,00	10,0	(11R)	3,00	7,09	PG-11	22,00
	.197	.394		.118	.279		.866
(13)	5,99	11,99	(13R)	8,66	8,97	PG-13	24,13
	.236	.472		.341	.353		.950
(16)	10,0	13,99	(16R)	10,74	12,22	PG-16	27,00
	.394	.551		.423	.481		1.063
(21)	13,84	18,00	(21R)	12,22	15,67	PG-21	32,99
	.545	.709		.481	.617		1.299

Dimensions are mm. over inches

Specifications and dimensions subject to change
Dimensions shown in mm.

Inline receptacle for terminating jacketed cable. Long WK backshell and backnut assembly suitable to seal and grip on the jacket of the cable. WKG same as WK but includes a wire sealing grommet and compression ring.

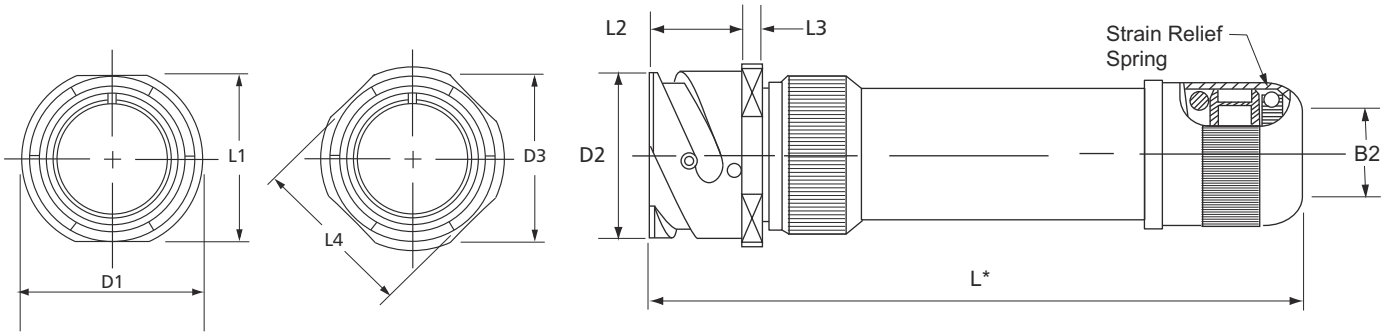

*Dimension "L" will vary from the values indicated with escalating or de-escalating backshells and some special insert configurations. Verify with our Customer Service Department.

Shell Size	D_1 Max.	D_2 Max.	D_3 +/- 0,2 .008	L_1 +/- 0,2 .008	L_2 + 0,4 .016	L_3 +/- 0,2 .008	L_4 +/- 0,2 .008
10SL	22,4	18,2	25,2	18,2	14,2	2,8	20,6
	.88	.72	.992	.717	.559	.110	.811
14S	28,8	24,6	29,8	24,6	14,2	3,2	25,4
	1.13	.97	1.173	.969	.559	.126	1.00
16S	31,6	27,4	32,3	27,4	14,2	3,2	28,6
	1.24	1.08	1.272	1.079	.559	.126	1.126
16	31,6	27,4	32,3	27,4	19,0	3,2	28,6
	1.24	1.08	1.272	1.079	.748	.126	1.126
18	35,0	30,8	34,8	30,8	19,0	4,0	31,7
	1.38	1.21	1.370	1.213	.748	.157	1.248
20	38,1	34,2	37,8	34,2	19,0	4,0	34,9
	1.50	1.35	1.488	1.346	.748	.157	1.374
22	41,1	37,4	41,1	37,4	19,0	4,0	38,1
	1.62	1.47	1.618	1.472	.748	.157	1.500
24	44,6	40,9	44,6	40,9	20,6	4,0	41,3
	1.76	1.61	1.756	1.610	.811	.157	1.626
28	50,9	46,7	50,9	46,7	20,6	4,0	47,6
	2.00	1.84	2.004	1.839	.811	.157	1.874
32	57,1	53,4	57,1	53,4	22,2	4,0	54,0
	2.25	2.10	2.248	2.102	8.74	.157	2.126
36	63,6	59,6	63,6	59,6	22,2	4,0	60,6
	2.50	2.35	2.504	2.346	8.74	.157	2.386
40	69,7	65.5	70,0	65,5	22,2	4,0	66,5
	2.74	2.58	2.756	2.579	8.74	.157	2.618

B2 Suffix in Connector Part No.	B2 Cable Range Min.	B2 Cable Range Max.
02	3,18	6,35
	.125	.250
03	3,99	9,53
	.157	.375
04	7,16	12,7
	.282	.500
05	10,34	15,8
	.407	.625
06	13,51	19,05
	.532	.750
07	16,69	22,23
	.657	.875
08	19,86	25,4
	.782	1.000
09	23,04	28,58
	.907	1.125
10	26,21	31,75
	1.032	1.250
11	29,39	34,93
	1.157	1.375
12	32,56	38,1
	1.282	1.500
17	50,80	53,99
	2.000	2.125

Dimensions are mm. over inches

Inline receptacle for terminating braided shield. Long WK backshell, grommet, and backnut assembly suitable for shield termination and strain relief on the jacket of the cable.

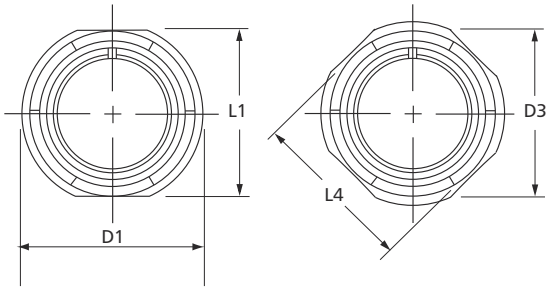

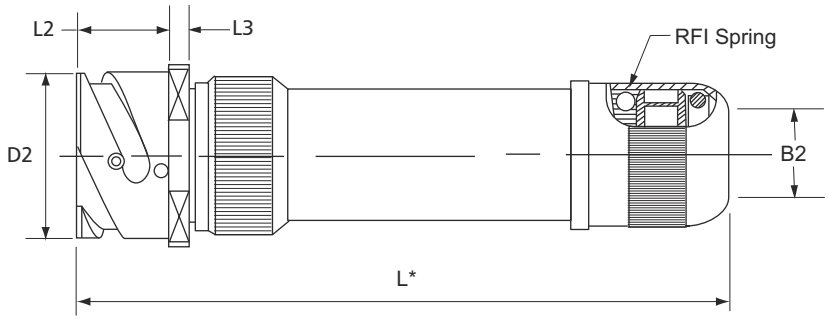

*Dimension "L" will vary from the values indicated with escalating or de-escalating backshells and some special insert configurations. Verify with our Customer Service Department.

Shell Size	D_1 Max.	D_2 Max.	D_3 +/- 0,2 .008	L_1 +/- 0,2 .008	L_2 + 0,4 .016	L_3 +/- 0,2 .008	L_4 +/- 0,2 .008	L Approx.
10SL	22,4	18,2	25,2	18,2	14,2	2,8	20,6	111
	.88	.72	.992	.717	.559	.110	.811	4.37
14S	28,8	24,6	29,8	24,6	14,2	3,2	25,4	112
	1.13	.97	1.173	.969	.559	.126	1.00	4.41
16S	31,6	27,4	32,3	27,4	14,2	3,2	28,6	100
	1.24	1.08	1.272	1.079	.559	.126	1.126	3.94
16	31,6	27,4	32,3	27,4	19,0	3,2	28,6	110
	1.24	1.08	1.272	1.079	.748	.126	1.126	4.33
18	35,0	30,8	34,8	30,8	19,0	4,0	31,7	127
	1.38	1.21	1.370	1.213	.748	.157	1.248	5.00
20	38,1	34,2	37,8	34,2	19,0	4,0	34,9	127
	1.50	1.35	1.488	1.346	.748	.157	1.374	5.00
22	41,1	37,4	41,1	37,4	19,0	4,0	38,1	133
	1.62	1.47	1.618	1.472	.748	.157	1.500	5.24
24	44,6	40,9	44,6	40,9	20,6	4,0	41,3	134
	1.76	1.61	1.756	1.610	.811	.157	1.626	5.28
28	50,9	46,7	50,9	46,7	20,6	4,0	47,6	134
	2.00	1.84	2.004	1.839	.811	.157	1.874	5.28
32	57,1	53,4	57,1	53,4	22,2	4,0	54,0	136
	2.25	2.10	2.248	2.102	8.74	.157	2.126	5.35
36	63,6	59,6	63,6	59,6	22,2	4,0	60,6	136
	2.50	2.35	2.504	2.346	8.74	.157	2.386	5.35
40	69,7	65.5	70,0	65,5	22,2	4,0	66,5	136
	2.74	2.58	2.756	2.579	8.74	.157	2.618	5.35

B2 Suffix in Connector Part No.	B2 Cable Range Min.	Max.
02	3,18	6,35
	.125	.250
03	3,99	9,53
	.157	.375
04	7,16	12,7
	.282	.500
05	10,34	15,8
	.407	.625
06	13,51	19,05
	.532	.750
07	16,69	22,23
	.657	.875
08	19,86	25,4
	.782	1.000
09	23,04	28,58
	.907	1.125
10	26,21	31,75
	1.032	1.250
11	29,39	34,93
	1.157	1.375
12	32,56	38,1
	1.282	1.500
17	50,80	53,99
	2.000	2.125

Dimensions are mm. over inches

Specifications and dimensions subject to change
Dimensions shown in mm.

Receptacle with through mounting holes. For threaded and countersunk mounting holes, see page 197.

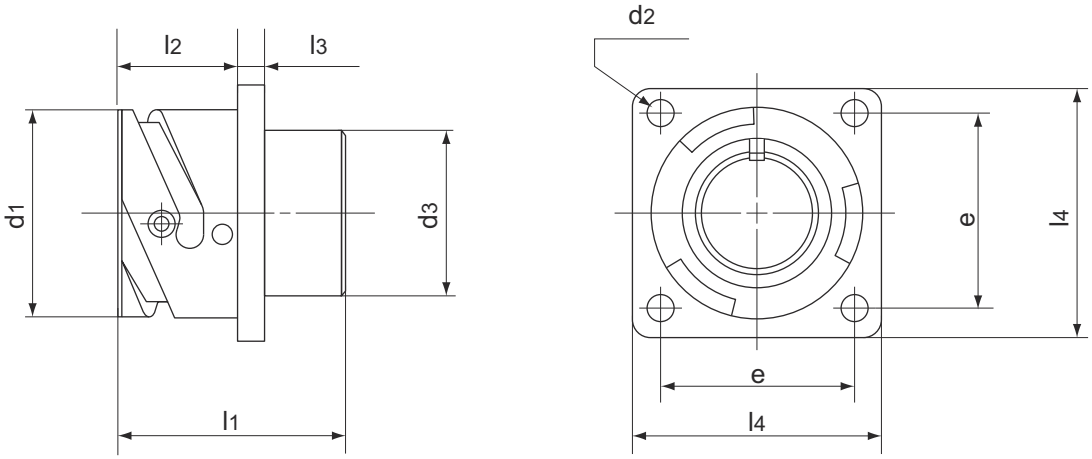

Shell Size	d_1 +0 -0,15	d_2 H13	d_3 max.	e ±0,1	l_1 max.	l_2 +0,4 -0	l_3 ±0,2	l_4 ±0,3
10SL	18,2	3,2	15,9	18,2	25	14,2	2,8	25,4
	0.72	0.12	0.62	0.72	0.98	0.56	0.11	1.00
14S	24,6	3,2	19,2	23	25	14,2	3,2	30
	0.97	0.12	0.75	0.90	0.98	0.56	0.12	1.18
16S	27,4	3,2	22,4	24,6	25	14,2	3,2	32,5
	1,08	0.12	0.88	0.97	0.98	0.56	0.12	1.28
16	27,4	3,2	22,4	24,6	34,1	19	3,2	32,5
	1,08	0.12	0.88	0.97	1.34	0.75	0.12	1.28
18	30,8	3,2	25,6	27	34,1	19	4	35
	1.21	0.12	1.00	1.06	1.34	0.75	0.16	1.38
20	34,2	3,2	29	29,4	34,1	19	4	38
	1.35	0.12	1.14	1.16	1.34	0.75	0.16	1.50
22	37,4	3,2	32,2	31,8	34,1	19	4	41
	1.47	0.12	1.27	1.25	1.34	0.75	0.16	1.61
24	40,9	3,7	35,3	34,9	36	20,6	4	44,5
	1.61	0.14	1.39	1.37	1.42	0.81	0.16	1.75
28	46,7	3,7	41,4	39,7	36	20,6	4	50,8
	1.84	0.14	1.63	1.56	1.42	0.81	0.16	2.00
32	53,4	4,3	47,8	44,5	37,6	22,2	4	57
	2.10	0.17	1.88	1.75	1.48	0.87	0.16	2.24
36	59,6	4,3	54,1	49,2	37,6	22,2	4	63,5
	2.35	0.17	2.13	1.94	1.48	0.87	0.16	2.50
40	65,5	4,3	59	55,5	37,6	22,2	4	69,9
	2.58	0.17	2.32	2.18	1.48	0.87	0.16	2.75

Dimensions are mm. over inches

Receptacle with through mounting holes, and PCB style contacts. For threaded and countersunk mounting holes, see page 197.

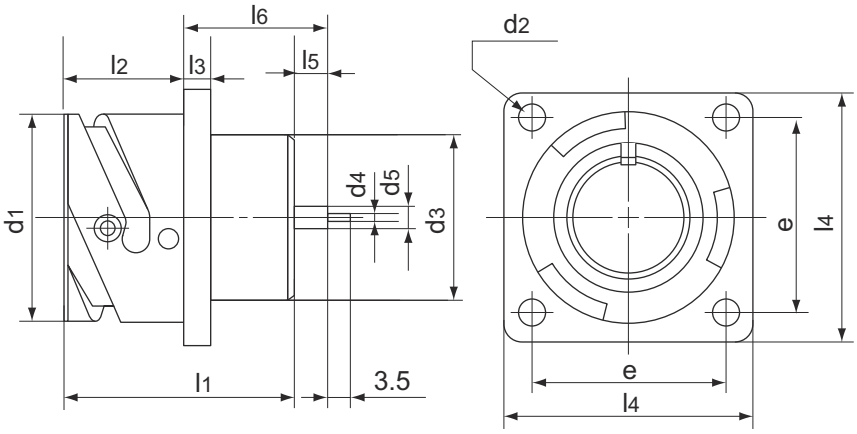

Connectors are available only with arrangements having contact sizes 16S-16 and 12. For different contact sizes, please consult factory.

Available contact	d_4 +0 -0,05	d_5 +0 -0,1
Size 16S and 16	0.75	1,6
Size 12	1,8	3,4

Shell Size	d_1 +0 -0,15	d_2 H13	d_3 max.	e +0,1	l_1 max.	l_2 +0,4 -1	l_3 ±0,2	l_4 ±0,3	Type YM		Type YM1		Type YM2		Type YM3	
									l_5	l_6	l_5	l_6	l_5	l_6	l_5	l_6
10SL	18,2	3,2	15,9	18,2	25	14,2	2,8	25,4	5	15,5	10*	20,5*	3,4*	13,9*	1,8	12,3
	0.72	0.12	0.62	0.72	0.98	0.56	0.11	1.00	0.20	0.61	0.39	0.81	0.13	0.55	0.07	0.48
14S	24,6	3,2	19,2	23	25	14,2	3,2	30	5	15,5	10*	20,5*	3,4*	13,9*	1,8	12,3
	0.97	0.12	0.75	0.90	0.98	0.56	0.12	1.18	0.20	0.61	0.39*	0.81	0.13	0.55	0.07	0.48
16S	27,4	3,2	22,4	24,6	25	14,2	3,2	32,5	5	15,5	10*	20,5*	3,4*	13,9*	1,8	12,3
	1.08	0.12	0.88	0.97	0.98	0.56	0.12	1.28	0.20	0.61	0.39	0.81	0.13	0.55	0.07	0.48
16	27,4	3,2	22,4	24,6	34,1	19	3,2	32,5	5	20	6,6	21,6	3,4*	18,4*	1,8	16,8
	1.08	0.12	0.88	0.97	1.34	0.75	0.12	1.28	0.20	0.79	0.26	0.85	0.13	0.72	0.07	0.66
18	30,8	3,2	25,6	27	34,1	19	4	35	5	20	6,6	21,6	3,4*	18,4*	1,8	16,8
	1.21	0.12	1.00	1.06	1.34	0.75	0.16	1.38	0.20	0.79	0.26	0.85	0.13	0.72	0.07	0.66
20	34,2	3,2	29	29,4	34,1	19	4	38	5	20	6,6	21,6	3,4*	18,4*	1,8	16,8
	1.35	0.12	1.14	1.16	1.34	0.75	0.16	1.50	0.20	0.79	0.26	0.85	0.13	0.72	0.07	0.66
22	37,4	3,2	32,2	31,8	34,1	19	4	41	5	20	6,6	21,6	3,4*	18,4*	1,8	16,8
	1.47	0.12	1.27	1.25	1.34	0.75	0.16	1.61	0.20	0.79	0.26	0.85	0.13	0.72	0.07	0.66
24	40,9	3,7	35,3	34,9	36	20,6	4	44,5	5	20	6,6*	21,6*	3,4	18,4	1,8*	16,8*
	1.61	0.14	1.39	1.37	1.42	0.81	0.16	1.75	0.20	0.79	0.26	0.85	0.13	0.72	0.07	0.66
28	46,7	3,7	41,4	39,7	36	20,6	4	50,8	5	20	6,6*	21,6*	3,4	18,4	1,8*	16,8*
	1.84	0.14	1.63	1.56	1.42	0.81	0.16	2.00	0.20	0.79	0.26	0.85	0.13	0.72	0.07	0.66
32	53,4	4,3	47,8	44,5	37,6	22,2	4	57	5*	20*	6,6*	21,6*	3,4	18,4	1,8	16,8
	2.10	0.17	1.88	1.75	1.48	0.87	0.16	2.24	0.20	0.79	0.26	0.85	0.13	0.72	0.07	0.66
36	59,6	4,3	54,1	49,2	37,6	22,2	4	63,5	5*	20*	6,6*	21,6*	3,4	18,4	1,8	16,8
	2.35	0.17	2.13	1.94	1.48	0.87	0.16	2.50	0.20	0.79	0.26	0.85	0.13	0.72	0.07	0.66
40	65,5	4,3	59	55,5	37,6	22,2	4	69,9	5*	20*	6,6*	21,6*	3,4	18,4	1,8	16,8
	2.58	0.17	2.32	2.18	1.48	0.87	0.16	2.75	0.20	0.79	0.26	0.85	0.13	0.72	0.07	0.66

* Consult Factory

Dimensions are mm. over inches

Receptacle with through mounting holes and a threaded back end. For threaded and countersunk mounting holes, see page 197.

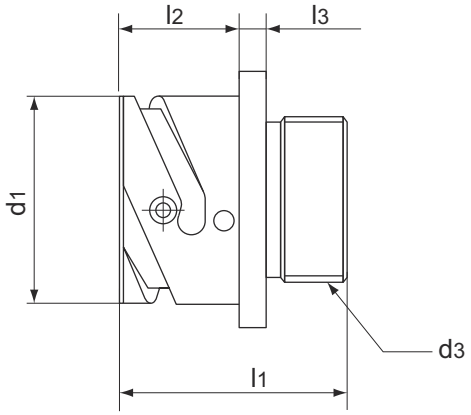

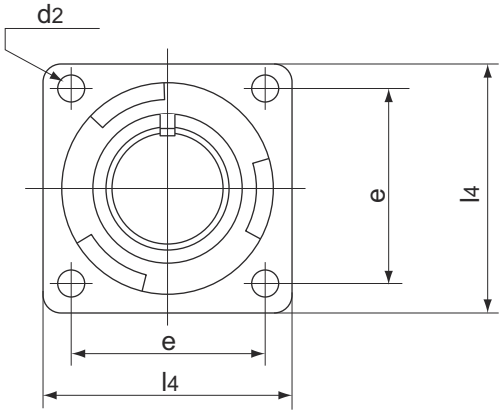

Shell Size	d_1 +0 -0,15	d_2 H13	d_3 Thread in inches	e ±0,1	l_1 ±0,3	l_2 +0,4 -0	l_3 ±0,2	l_4 ±0,3
10SL	18,2	3,2	5/8-24 UNEF-2A	18,2	24,7	14,2	2,8	25,4
	0.72	0.12		0.72	0.97	0.56	0.11	1.00
14S	24,6	3,2	3/4-20 UNEF-2A	23	24,7	14,2	3,2	30
	0.97	0.12		0.90	0.97	0.56	0.12	1.18
16S	27,4	3,2	7/8-20 UNEF-2A	24,6	24,7	14,2	3,2	32,5
	1.08	0.12		0.97	0.97	0.56	0.12	1.28
16	27,4	3,2	7/8-20 UNEF-2A	24,6	33,8	19	3,2	32,5
	1.08	0.12		0.97	1.33	0.75	0.12	1.28
18	30,8	3,2	1”-20 UNEF-2A	27	33,8	19	4	35
	1.21	0.12		1.06	1.33	0.75	0.16	1.38
20	34,2	3,2	1 1/8”-18 UNEF-2A	29,4	33,8	19	4	38
	1.35	0.12		1.16	1.33	0.75	0.16	1.50
22	37,4	3,2	1 1/4”-18 UNEF-2A	31,8	33,8	19	4	41
	1.47	0.12		1.25	1.33	0.75	0.16	1.61
24	40,9	3,7	1 3/8”-18 UNEF-2A	34,9	35,7	20,6	4	44,5
	1.61	0.14		1.37	1.40	0.81	0.16	1.75
28	46,7	3,7	1 5/8”-18 UNEF-2A	39,7	35,7	20,6	4	50,8
	1.84	0.14		1.56	1.40	0.81	0.16	2.00
32	53,4	4,3	1 7/8”-16 UN-2A	44,5	37,3	22,2	4	57
	2.10	0.17		1.75	1.47	0.87	0.16	2.24
36	59,6	4,3	2” 1/16-16 UN-2A	49,2	37,3	22,2	4	63,5
	2.35	0.17		1.94	1.47	0.87	0.16	2.50
40	65,5	4,3	2” 5/16-16 UN-2A	55,5	37,3	22,2	4	69,9
	2.58	0.17		2.18	1.47	0.87	0.16	2.75

Dimensions are mm. over inches

Receptacle with threaded mounting holes. For through mounting holes, see page 197.

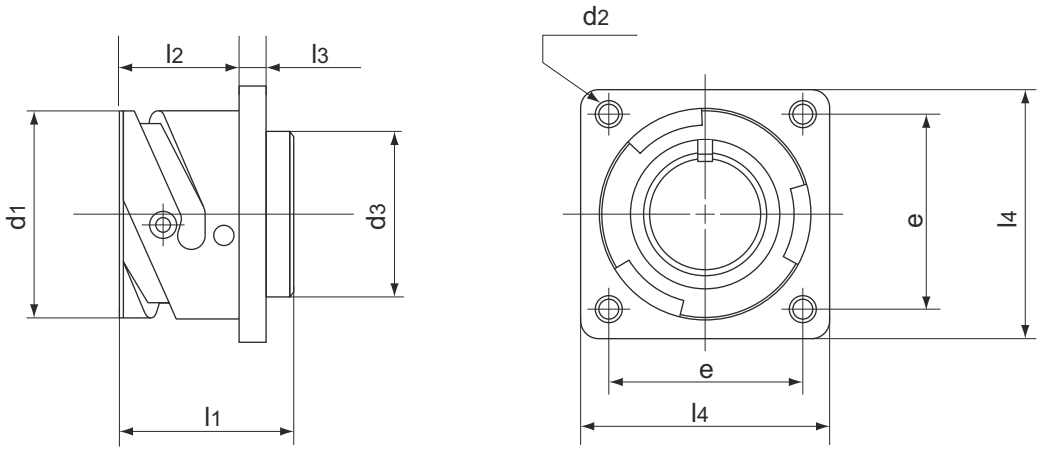

Shell Size	d_1 +0 -0,15	d_2	d_3 max.	e ±0,1	l_1 max.	l_2 +0,4 -0	l_3 ±0,2	l_4 ±0,3
10SL	18,2	M4	16,2	18,2	27,9	18,2	2,8	25,4
	0.72		0.64	0.72	1.10	0.72	0.11	1.00
14S	24,6	M4	19,2	23	27,9	18,2	3,2	30
	0.97		0.75	0.90	1.10	0.72	0.12	1.18
16S	27,4	M4	22,4	24,6	27,9	18,2	3,2	32,5
	1,08		0.88	0.97	1.10	0.72	0.12	1.28
16	27,4	M4	22,4	24,6	34,1	23,05	3,2	32,5
	1,08		0.88	0.97	1.34	0.91	0.12	1.28
18	30,8	M4	25,6	27	34,1	23,05	4	35
	1.21		1.00	1.06	1.34	0.91	0.16	1.38
20	34,2	M4	29	29,4	34,1	23,05	4	38
	1.35		1.14	1.16	1.34	0.91	0.16	1.50
22	37,4	M4	32,2	31,8	34,1	23,05	4	41
	1.47		1.27	1.25	1.34	0.91	0.16	1.61
24	40,9	M4	35,3	34,9	34,1	23,05	4	44,5
	1.61		1.39	1.37	1.34	0.91	0.16	1.75
28	46,7	M5	41,4	39,7	36	24,05	4	50,8
	1.84		1.63	1.56	1.42	0.95	0.16	2.00
32	53,4	M5	47,8	44,5	37,6	24,05	4	57
	2.10		1.88	1.75	1.48	0.95	0.16	2.24
36	59,6	M5	54,1	49,2	37,6	24,05	4	63,5
	2.35		2.13	1.94	1.48	0.95	0.16	2.50
40	65,5	M5	59	55,5	37,6	24,05	4	69,9
	2.58		2.32	2.18	1.48	0.95	0.16	2.75

Dimensions are mm. over inches

Receptacle with threaded mounting holes and PCB style contacts. For through mounting holes, see page 197.

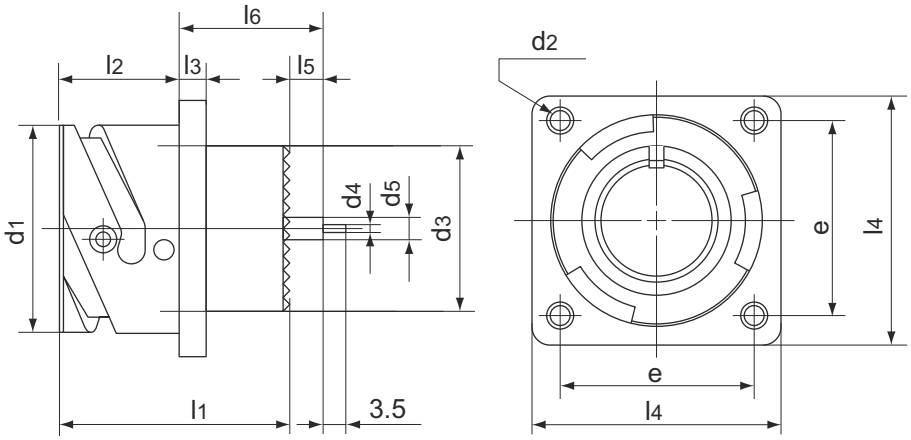

Connectors are available only with arrangements having contact sizes 16S-16 and 12. For different contact sizes, please consult factory.		
Available contact	d_4 +0 -0,05	d_5 +0 -0,1
Size 16S and 16	0.75	1,6
Size 12	1,8	3,4

Shell Size	d_1 +0 -0,15	d_2 —	d_3 max.	e +0,1	l_1 max.	l_2 +0,4 -0	l_3 ±0,2	l_4 ±0,3	Type YM		Type YM1		Type YM2		Type YM3	
									l_5	l_6	l_5	l_6	l_5	l_6	l_5	l_6
10SL	18,2	M4	16,2	18,2	27,9	18,2	2,8	25,4	5	14,4	6,6*	16*	3,4*	12,8*	1,8*	11,2*
	0.72		0.64	0.72	1.10	0.72	0.11	1.00	0.20	0.57	0.26	0.63	0.13	0.50	0.07	0.44
14S	24,6	M4	19,2	23	27,9	18,2	3,2	30	5	14,4	6,6*	16*	3,4*	12,8*	1,8*	11,2*
	0.97		0.75	0.90	1.10	0.72	0.12	1.18	0.20	0.57	0.26	0.63	0.13	0.50	0.07	0.44
16S	27,4	M4	22,4	24,6	27,9	18,2	3,2	32,5	5	14,4	6.6*	16*	3,4*	12,8*	1,8*	11,2*
	1.08		0.88	0.97	1.10	0.72	0.12	1.28	0.20	0.57	0.26	0.63	0.13	0.50	0.07	0.44
16	27,4	M4	22,4	24,6	34,1	23,05	3,2	32,5	5	15,8	6,6	17,4	3,4*	14.2*	1,8	12,6
	1.08		0.88	0.97	1.34	0.91	0.12	1.28	0.20	0.62	0.26	0.68	0.13	0.56	0.07	0.50
18	30,8	M4	25,6	27	34,1	23,05	4	35	6,1	16,8	6,6	17,4	3,4*	14.2*	1,8	12,6
	1.21		1.01	1.06	1.34	0.91	0.16	1.38	0.24	0.66	0.26	0.68	0.13	0.56	0.07	0.50
20	34,2	M4	29	29,4	34,1	23,05	4	38	5	15,8	6,6	17,4	3,4*	14.2*	1,8	12,6
	1.35		1.14	1.16	1.34	0.91	0.16	1.50	0.20	0.62	0.26	0.68	0.13	0.56	0.07	0.50
22	37,4	M4	32,2	31,8	34,1	23,05	4	41	5	15,8	6,6	17,4	3,4*	14.2*	1,8	12,6
	1.47		1.27	1.25	1.34	0.91	0.16	1.61	0.20	0.62	0.26	0.68	0.13	0.56	0.07	0.50
24	40,9	M4	35,3	34,9	34,1	23,05	4	44,5	6,9	17,6	6,6*	17,4*	3,4*	14.2*	1,8*	12,6*
	1.61		1.39	1.37	1.34	0.91	0.16	1.75	0.27	0.69	0.26	0.68	0.13	0.56	0.07	0.50
28	46,7	M5	41,4	39,7	36	24,05	4	50,8	5	16,7	6,6*	18,3*	3,4	15,1	1,8*	13,5*
	1.84		1.63	1.56	1.42	0.95	0.16	2.00	0.20	0.66	0.26	0.72	0.13	0.59	0.07	0.53
32	53,4	M5	47,8	44,5	37,6	24,05	4	57	5	18,3	6,6*	19,9*	3,4	16,7	1,8	15,1
	2.10		1.88	1.75	1.48	0.95	0.16	2.24	0.20	0.72	0.26	0.78	0.13	0.66	0.07	0.59
36	59,6	M5	54,1	49,2	37,6	24,05	4	63,5	5	18,3	6,6*	19,9*	3,4	16,7	1,8	15,1
	2.35		2.13	1.94	1.48	0.95	0.16	2.50	0.20	0.72	0.26	0.78	0.13	0.66	0.07	0.59
40	65,5	M5	59	55,5	37,6	24,05	4	69,9	5	18,3	6,6*	19,9*	3,4	16,7	1,8	15,1
	2.58		2.32	2.18	1.48	0.95	0.16	2.75	0.20	0.72	0.26	0.78	0.13	0.66	0.07	0.59

* Consult Factory

Dimensions are mm. over inches

Receptacle with threaded mounting holes and threaded back end. For through mounting holes, see page 197.

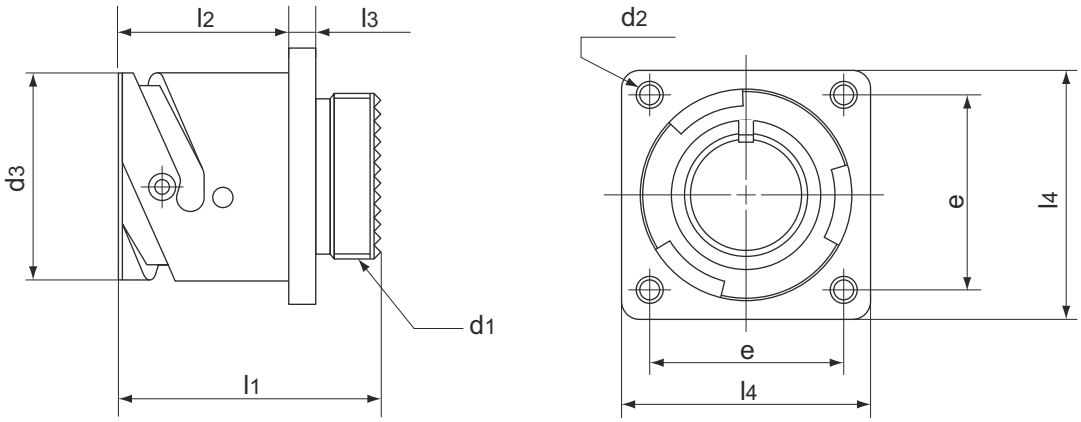

Shell Size	d_1 Thread in inches	d_2 —	d_3 +0 -0,15	e ±0,1	l_1 ±0,3	l_2 +0,4 -0	l_3 ±0,2	l_4 ±0,3
10SL	5/8-24 UNEF-2A	M4	18,2 0.72	18,2 0.72	27,6 1.09	18,2 0.72	2,8 0.11	25,4 1.00
14S	3/4-20 UNEF-2A	M4	24,6 0.97	23 0.90	27,6 1.09	18,2 0.72	3,2 0.12	30 1.18
16S	7/8-20 UNEF-2A	M4	27,4 1.08	24,6 0.97	27,6 1.09	18,2 0.72	3,2 0.12	32,5 1.28
16	7/8-20 UNEF-2A	M4	27,4 1.08	24,6 0.97	33,8 1.33	23,05 0.91	3,2 0.12	32,5 1.28
18	1”-20 UNEF-2A	M4	30,8 1.21	27 1.06	33,8 1.33	23,05 0.90	4 0.16	35 1.38
20	1” 1/8-18 UNEF-2A	M4	34,2 1.35	29,4 1.16	33,8 1.33	23,05 0.91	4 0.16	38 1.50
22	1” 1/4-18 UNEF-2A	M4	37,4 1,47	31,8 1.25	33,8 1.33	23,05 0.91	4 0.16	41 1.61
24	1” 3/8-18 UNEF-2A	M4	40,9 1.61	34,9 1.37	33,8 1.33	23,05 0.91	4 0.16	44,5 1.75
28	1” 5/8-18 UNEF-2A	M5	46,7 1.84	39,7 1.56	35,7 1.40	24,05 0.95	4 0.16	50,8 2.00
32	1” 7/8-16 UN-2A	M5	53,4 2.10	44,5 1.75	37,3 1.47	24,05 0.95	4 0.16	57 2.24
36	2” 1/16-16 UN-2A	M5	59,6 2.35	49,2 1.94	37,3 1.47	24,05 0.95	4 0.16	63,5 2.50
40	2” 5/16-16 UN-2A	M5	65,5 2.58	55,5 2.18	37,2 1.46	24,05 0.95	4 0.16	69,9 2.75

Dimensions are mm. over inches

Receptacle with threaded mounting holes and backshell. R type has an individual wire sealing grommet. For through mounting holes, see page 197.

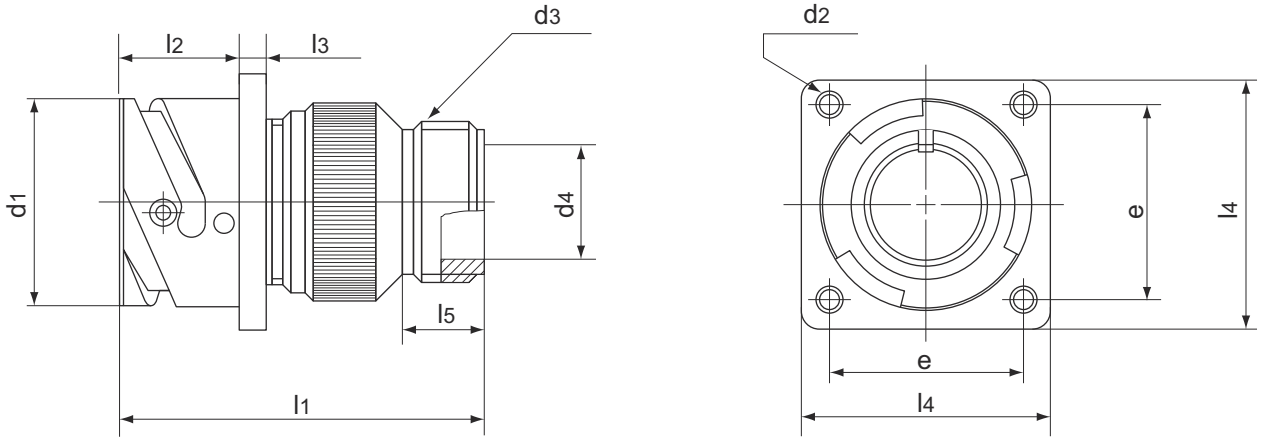

Shell Size	d_1 +0 -0,15	d_2	d_3 Thread in inches	d_4 +0,1 -0	e ±0,1	l_1 max.	l_2 +0,4 -0	l_3 ±0,2	l_4 ±0,3	l_5 min.
10SL	18,2	M4	5/8-24 UNEF-2A	10,4	18,2	46	18,2	2,8	25,4	9,5
	0.72			0.41	0.72	1.81	0.72	0.11	1.00	0.37
14S	24,6	M4	3/4-20 UNEF-2A	13,2	23	50	18,2	3,2	30	9,5
	0.97			0.52	0.90	2.00	0.72	0.13	1.18	0.37
16S	27,4	M4	7/8-20 UNEF-2A	16,2	24,6	50	18,2	3,2	32,5	9,5
	1.08			0.64	0.97	2.00	0.72	0.13	1.28	0.37
16	27,4	M4	7/8-20 UNEF-2A	16,2	24,6	58	23.05	3,2	32,5	9,5
	1.08			0.64	0.97	2.28	0.91	0.13	1.28	0.37
18	30,8	M4	1”-20 UNEF-2A	19,2	27	58	23.05	4	35	9,5
	1.21			0.75	1.06	2.28	0.91	0.16	1.38	0.37
20	34,2	M4	1”3/16-18 UNEF-2A	22	29,4	58	23.05	4	38	9,5
	1.35			0.87	1.16	2.28	0.91	0.16	1.50	0.37
22	37,4	M4	1”3/16-18 UNEF-2A	24,5	31,8	59	23.05	4	41	9,5
	1.47			0.96	1.25	2.32	0.91	0.16	1.61	0.37
24	40,9	M4	1”7/16-18 UNEF-2A	27,8	34,9	59	23.05	4	44,5	9,5
	1.61			1.109	1.37	2.32	0.91	0.16	1.75	0.37
28	46,7	M5	1”7/16-18 UNEF-2A	31,2	39,7	67	24,05	4	50,8	9,5
	1.84			1.23	1.56	2.64	0.95	0.16	2.00	0.37
32	53,4	M5	1”3/4-18 UNS-2A	37,8	44,5	71	24,05	4	57	11
	2.10			1.49	1.75	2.79	0.95	0.16	2.24	0.43
36	59,6	M5	2”-18 UNS-2A	45	49,2	71	24,05	4	63,5	11,8
	2.35			1.77	1.94	2.79	0.95	0.16	2.50	0.46
40	65,5	M5	2”1/4-16 UN-2A	51,2	55,5	86	24,05	4	69,9	11,8
	2.58			2.01	2.18	3.38	0.95	0.16	2.75	0.46

Dimensions are mm. over inches

Receptacle with threaded mounting holes and a cable clamp for jacketed cables. CFZ type also has an individual wire sealing grommet. For through mounting holes, see page 197.

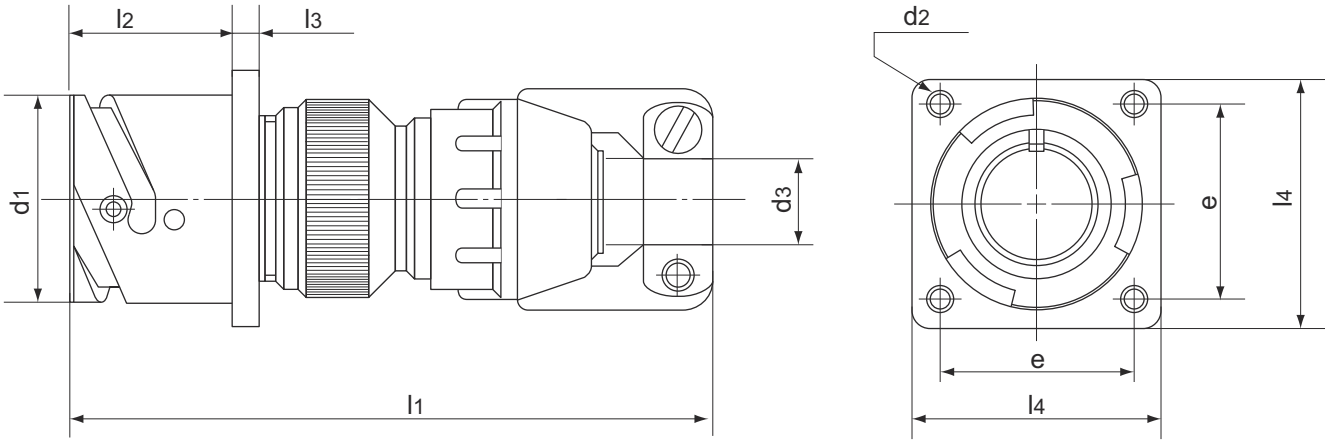

Shell Size	d_1 +0 -0,15	d_2 —	d_3 open	d_3 closed	e ±0,1	l_1 max.	l_2 +0,4 -0	l_3 ±0,2	l_4 ±0,3
10SL	18,2	M4	7,93	2,38	18,2	76	18,2	2,8	25,4
	0.72		.312	.094	0.72	2.99	0.72	0.11	1.00
14S	24,6	M4	11,12	6,35	23	80	18,2	3,2	30
	0.97		.438	.25	0.90	3.15	0.72	0.12	1.18
16S	27,4	M4	13,48	8,0	24,6	80	18,2	3,2	32,5
	1.08		.531	.315	0.97	3.15	0.72	0.12	1.28
16	27,4	M4	13,48	8,0	24,6	88	23,05	3,2	32,5
	1.08		.531	.315	0.97	3.46	0.91	0.12	1.28
18	30,8	M4	15,87	9,6	27	91	23,05	4	35
	1.21		.625	.375	1.06	3.58	0.91	0.16	1.38
20	34,2	M4	19,0	11,3	29,4	91	23,05	4	38
	1.35		.748	.445	1.16	3.58	0.91	0.16	1.50
22	37,4	M4	19,0	11,3	31,8	92	23,05	4	41
	1.47		.748	.445	1.25	3.62	0.91	0.16	1.61
24	40,9	M4	23,8	15,5	34,9	95	23,05	4	44,5
	1.61		.938	.610	1.37	3.74	0.91	0.16	1.75
28	46,7	M5	23,8	15,5	39,7	103	24,05	4	50,8
	1.84		.938	.610	1.56	4.05	0.95	0.16	2.00
32	53,4	M5	31,75	23,4	44,5	113	24,05	4	57
	2.10		1.25	.921	1.75	4.45	0.95	0.16	2.24
36	59,6	M5	35,0	23,4	49,2	120	24,05	4	63,5
	2.35		1.378	.921	1.94	4.72	0.95	0.16	2.50
40	65,5	M5	41,25	29,9	55,5	135	24,05	4	69,9
	2.58		1.625	1.177	2.18	5.31	0.95	0.16	2.75

Dimensions are mm. over inches

Receptacle with threaded mounting holes, individual wire sealing grommet and cable-clamp with bushing. AF type has no grommet. For through mounting holes, see page 197.

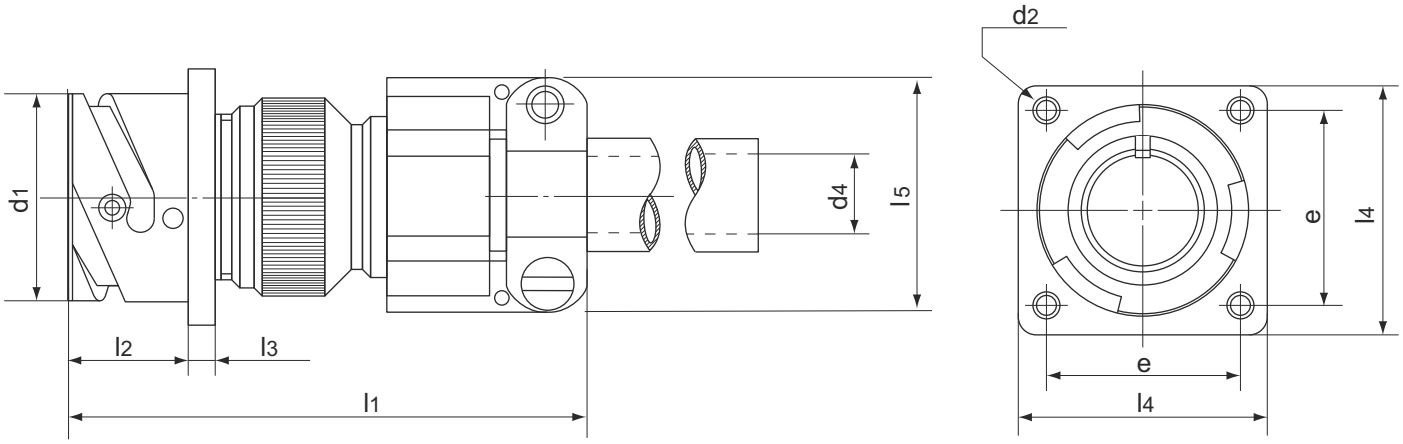

Shell Size	d_1 +0 -0,15	d_2 —	d_3 * max.	e ±0,1	l_1 max.	l_2 +0,4 -0	l_3 ±0,2	l_4 ±0,3	l_5 max.
10SL	18,2 0.72	M4	5,6 0.22	18,2 0.72	67 2.64	18,2 0.72	2,8 0.11	25,4 1.00	22,7 0.89
14S	24,6 0.97	M4	7,9 0.31	23 0.90	72 2.83	18,2 0.72	3,2 0.12	30 1.18	27,5 1.08
16S	27,4 1,08	M4	11 0.43	24,6 0.97	75 2.95	18,2 0.72	3,2 0.12	32,5 1.28	30 1.18
16	27,4 1,08	M4	11 0.43	24,6 0.97	82 3.23	23,05 0.91	3,2 0.12	32,5 1.28	30 1.18
18	30,8 1.21	M4	14,2 0.56	27 1.06	82 3.23	23,05 0.91	4 0.16	35 1.38	32,2 1.27
20	34,2 1.35	M4	15,8 0.62	29,4 1.16	82 3.23	23,05 0.91	4 0.16	38 1.50	37,5 1.48
22	37,4 1.47	M4	15,8 0.62	31,8 1.25	83 3.27	23,05 0.91	4 0.16	41 1.61	37,5 1.48
24	40,9 1.61	M4	19 0.75	34,9 1.37	85 3.35	23,05 0.91	4 0.16	44,5 1.75	43,3 1.70
28	46,7 1.84	M5	19 0.75	39,7 1.56	93 3.66	24,05 0.95	4 0.16	50,8 2.00	43,3 1.70
32	53,4 2.10	M5	23,8 0.94	44,5 1.75	99 3.90	24,05 0.95	4 0.16	57 2.24	51,7 2.03
36	59,6 2.35	M5	31,7 1.25	49,2 1.94	100 3.94	24,05 0.95	4 0.16	63,5 2.50	58 2.28
40	65,5 2.58	M5	34,9 1.37	55,5 2.18	128 5.04	24,05 0.95	4 0.16	69,9 2.75	68.5 2.70

* Max. permissible outside diameter of cable.
Dimensions are mm. over inches

Receptacle with threaded mounting holes, individual wire sealing grommet and backshell for heat shrinkable tubing. AG type has no grommet. For through mounting holes, see page 197.

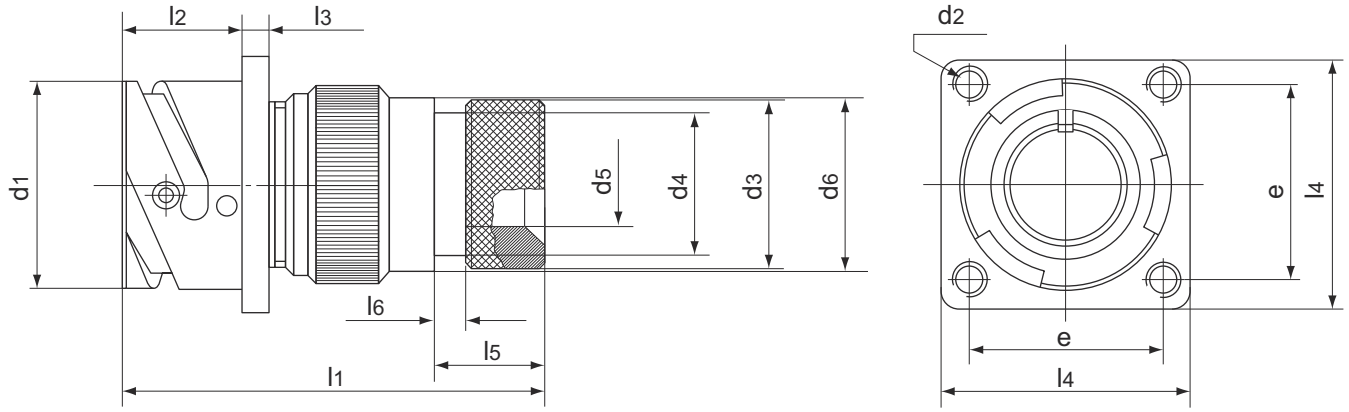

Shell Size	d_1 +0 -0,15	d_2 —	d_3 ±0,2	d_4 max.	d_5 ±0,1	d_6 ±0,2	e ±0,1	l_1 max.	l_2 +0,4 -0	l_3 ±0,2	l_4 ±0,3	l_5 ±0,1	l_6 ±0,1
10SL	18,2	M4	15,5	13,3	7,9	17	18,2	50	18,2	2,8	25,4	11,7	3,5
	0.72		0.61	0.52	0.31	0.67	0.72	1.97	0.72	0.11	1.00	0.46	0.14
14S	24,6	M4	19,1	17	10,8	20,1	23	50	18,2	3,2	30	11,7	3,5
	0.97		0.75	0.67	0.42	0.79	0.90	1.97	0.72	0.12	1.18	0.46	0.14
16S	27,4	M4	23,9	21,9	13,7	23,5	24,6	50	18,2	3,2	32,5	11,7	3,5
	1.08		0.94	0.86	0.54	0.92	0.97	1.97	0.72	0.12	1.28	0.46	0.14
16	27,4	M4	23,9	21,9	13,7	23,5	24,6	60	23,5	3,2	32,5	11,5	3,5
	1.08		0.94	0.86	0.54	0.92	0.97	2.36	0.92	0.12	1.28	0.45	0.14
18	30,8	M4	23,9	21,9	14,8	26,5	27	60	23,5	4	35	11,5	3,5
	1.21		0.94	0.86	0.58	1.04	1.06	2.36	0.92	0.16	1.38	0.45	0.14
20	34,2	M4	29,6	26,2	18,9	30,2	29,4	65	23,5	4	38	12,4	3,5
	1.35		1.16	1.03	0.74	1.19	1.16	2.56	0.92	0.16	1.50	0.49	0.14
22	37,4	M4	29,6	26,2	21	33,6	31,8	65	23,5	4	41	12,4	3,5
	1.47		1.16	1.03	0.83	1.32	1.25	2.56	0.92	0.16	1.61	0.49	0.14
24	40,9	M4	37,8	34,5	24,8	36,1	34,9	65	23,5	4	44,5	12,7	3,5
	1.61		1.49	1.36	0.98	1.42	1.37	2.56	0.92	0.16	1.75	0.50	0.14
28	46,7	M5	37,8	34,5	27,2	41,4	39,7	65	24,05	4	50,8	12,7	3,5
	1.84		1.49	1.36	1.07	1.63	1.56	2.56	0.95	0.16	2.00	0.50	0.14
32	53,4	M5	47,8	43,6	33,5	48,6	44,5	70	24,05	4	57	15,2	3,5
	2.10		1.88	1.72	1.32	1.91	1.75	2.75	0.95	0.16	2.24	0.60	0.14
36	59,6	M5	47,8	43,6	38,7	54,8	49,2	75	24,05	4	63,5	15,2	3,5
	2.35		1.88	1.72	1.52	2.16	1.94	2.95	0.95	0.16	2.50	0.60	0.14
40	65,5	M5	57,8	52,6	48,2	60,9	55,5	77	24,05	4	69,9	15,2	3,5
	2.58		2.27	2.07	1.90	2.40	2.18	3.03	0.95	0.16	2.75	0.60	0.14

Dimensions are mm. over inches

Receptacle with threaded mounting holes, individual wire sealing grommet and a two piece swivel backshell for heat shrinkable tubing. For through mounting holes, see page 197. AG2 type has no wire sealing grommet.

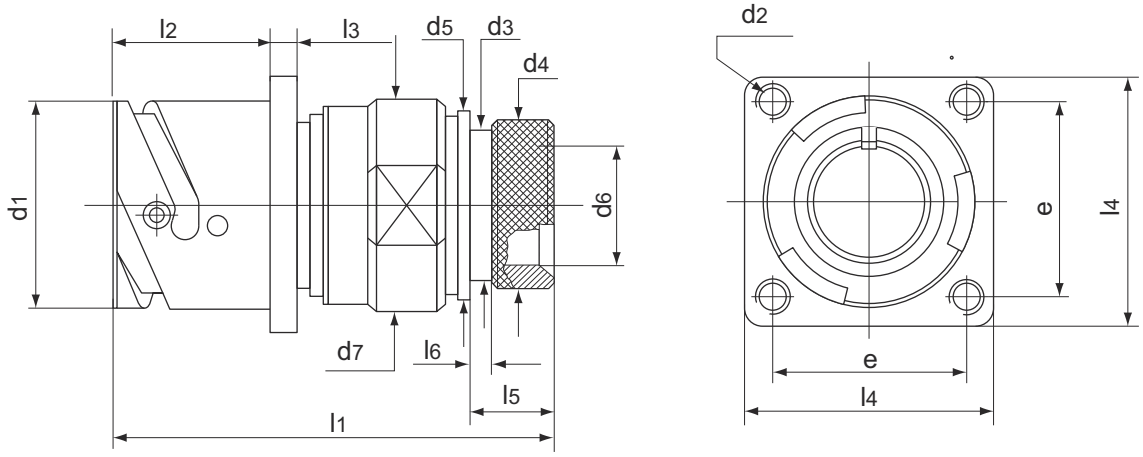

Shell Size	d_1 +0 -0,15	d_2 —	d_3 ±0,1	d_4 —	d_5 ±0,1	d_6 ±0,1	d_7 max.	e ±0,1	l_1 * ~	l_2 +0,4 -0	l_3 ±0,2	l_4 ±0,3	l_5 ±0,1	l_6 ±0,1
10SL	18,2	M4	13	15,5	17	8,6	22	18,2	51,9	18,2	2,8	25,4	11,7	3,5
	0.72		0.51	0.61	0.67	0.34	0.87	0.72	2.04	0.72	0.11	1.00	0.46	0.14
14S	24,6	M4	16,8	19,1	20,1	11,2	25	23	51,9	18,2	3,2	30	11,7	3,5
	0.97		0.66	0.75	0.79	0.44	0.98	0.90	2.04	0.72	0.12	1.18	0.46	0.14
16S	27,4	M4	21,7	23,9	23,5	14	28	24,6	52,7	18,2	3,2	32,5	11,7	3,5
	1.08		0.85	0.94	0.92	0.55	1.10	0.97	2.07	0.72	0.12	1.28	0.46	0.14
16	27,4	M4	21,7	23,9	23,5	14	28	24,6	59,3	23,05	3,2	32,5	11,5	3,5
	1.08		0.85	0.94	0.92	0.55	1.10	0.97	2.33	0.91	0.12	1.28	0.45	0.14
18	30,8	M4	21,7	23,9	26,5	16,4	31	27	58,8	23,05	4	35	11,5	3,5
	1.12		0.85	0.94	1.04	0.64	1.22	1.06	2.31	0.91	0.16	1.38	0.45	0.14
20	34,2	M4	26,1	29,6	30,2	19,3	35	29,4	59,5	23,05	4	38	12,4	3,5
	1.35		1.03	1.16	1.19	0.76	1.38	1.16	2.34	0.91	0.16	1.50	0.49	0.14
22	37,4	M4	26,1	29,6	33,6	22	38	31,8	59,5	23,05	4	41	12,4	3,5
	1.47		1.03	1.16	1.32	0.87	1.50	1.25	2.34	0.91	0.16	1.61	0.49	0.14
24	40,9	M4	34,3	37,8	36,1	25	41	34,9	60,2	23,05	4	44,5	12,7	3,5
	1.61		1.35	1.49	1.42	0.98	1.61	1.37	2.37	0.91	0.16	1.75	0.50	0.14
28	46,7	M5	34,3	37,8	41,4	28	48	39,7	63,9	24,05	4	50,8	12,7	3,5
	1.84		1.35	1.49	1.63	1.10	1.89	1.56	2.51	0.95	0.16	2.00	0.50	0.14
32	53,4	M5	43,4	47,8	48,6	34,8	54	44,5	66,2	24,05	4	57	15,2	3,5
	2.10		1.71	1.88	1.91	1.37	2.12	1.75	2.61	0.95	0.16	2.24	0.60	0.14
36	59,6	M5	43,4	47,8	54,8	38,7	61	49,2	66,2	24,05	4	63,5	15,2	3,5
	2.35		1.71	1.88	2.16	1.52	2.40	1.94	2.61	0.95	0.16	2.50	0.60	0.14
40	65,5	M5	52,6	57,8	61	48,2	68	55,5	66,5	24,05	4	69,9	15,5	3,5
	2.58		2.07	2.27	2.40	1.90	2.68	2.18	2.62	0.95	0.16	2.75	0.61	0.14

* Nominal dimension with tightened backshell.
Dimensions are mm. over inches

Receptacle with threaded mounting holes, long backshell and a cable clamp for jacketed cables. CFZ type also has an individual wire sealing grommet. For through mounting holes, see page 197.

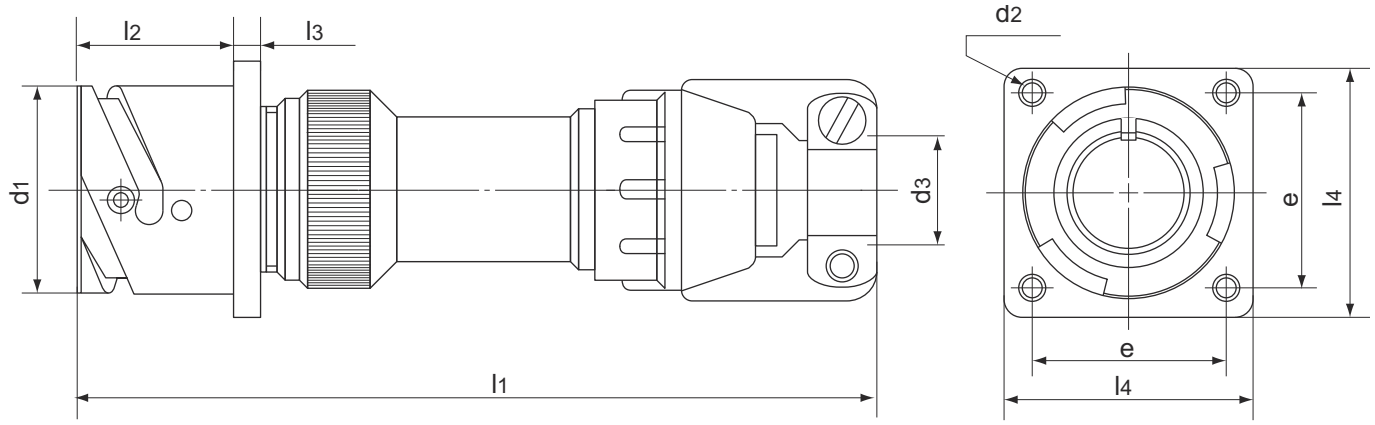

Shell Size	d_1 +0 -0,15	d_2 —	d_3 open	d_3 closed	e ±0,1	l_1 max.	l_2 +0,4 -0	l_3 ±0,2	l_4 ±0,3
10SL	18,2	M4	7,93	2,38	18,2	104	18,2	2,8	25,4
	0.72		.312	.094	0.72	4.09	0.72	0.11	1.0
14S	24,6	M4	11,12	6,35	23	104	18,2	3,2	30
	0.97		.438	.25	0.90	4.09	0.72	0.12	1.18
16S	27,4	M4	13,48	8,0	24,6	104	18,2	3,2	32,5
	1.08		.531	.315	0.97	4.09	0.72	0.12	1.28
16	27,4	M4	13,48	8,0	24,6	114	23,05	3,2	32,5
	1.08		.531	.315	0.97	4.49	0.91	0.12	1.28
18	30,8	M4	15,87	9,6	27	119	23,05	4	35
	1.21		.625	.378	1.06	4.68	0.91	0.16	1.38
20	34,2	M4	19,0	11,3	29,4	119	23,05	4	38
	1.35		.748	.445	1.16	4.68	0.91	0.16	1.50
22	37,4	M4	19,0	11,3	31,8	119	23,05	4	41
	1.47		.748	.445	1.25	4.68	0.91	0.16	1.61
24	40,9	M4	23,8	15,5	34,9	122	23,05	4	44,5
	1.61		.938	.610	1.37	4.80	0.91	0.16	1.75
28	46,7	M5	23,8	15,5	39,7	130	24,05	4	50,8
	1.84		.938	.610	1.56	5.12	0.95	0.16	2.00
32	53,4	M5	31,75	23,4	44,5	137	24,05	4	57
	2.10		1.250	.921	1.75	5.39	0.95	0.16	2.24
36	59,6	M5	35,0	23,4	49,2	144	24,05	4	63,5
	2.35		1.378	.921	1.94	5.67	0.95	0.16	2.50
40	65,5	M5	41,25	29,9	55,5	144	24,05	4	69,9
	2.58		1.625	1.177	2.18	5.67	0.95	0.16	2.75

Dimensions are mm. over inches

Receptacle with threaded mounting holes for terminating conduit. Straight long RK backshell with adapter and backnut assembly to seal and grip on the jacket of a steel core flexible *EF type Anaconda sealtite conduit*. A wire sealing grommet and compression ring is included. ARK same as RK but without a grommet or compression ring.

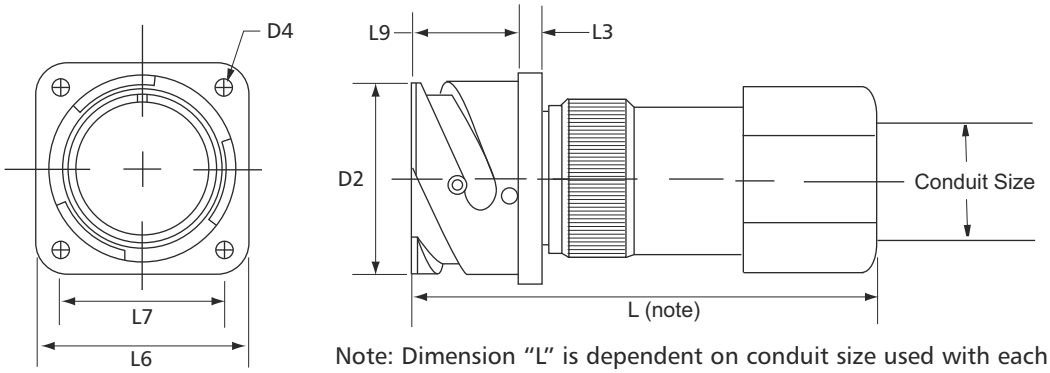

Note: Dimension "L" is dependent on conduit size used with each shell size. Please consult our Customer Service Department.

Shell Size	D_2 Max.	D_4 +/- 0,1 .004	L_1 0,2 .008	L_3 +/- 0,2 .008	L_6+/- 0,4 .016	L_7 +/- 0,2 .008	L_9 + 0,2 .008
10SL	18,2 .72	3,2 .126	18,2 .717	2,8 .110	25,4 1.00	18,2 .717	18,2 .717
14S	24,6 .97	3,2 .126	24,6 .969	3,2 .126	30,0 1.181	23,0 .906	18,2 .717
16S	27,4 1.08	3,2 .126	27,4 1.079	3,2 .126	32,5 1.280	24,6 .969	18,2 .717
16	27,4 1.08	3,2 .126	27,4 1.079	3,2 .126	32,5 1.280	24,6 .969	23,1 .909
18	30,8 1.21	3,2 .126	30,8 1.213	4,0 .157	35,0 1.378	27,0 1.063	23,1 .909
20	34,2 1.35	3,2 .126	34,2 1.346	4,0 .157	38,0 1.496	29,4 1.157	23,1 .909
22	37,4 1.47	3,2 .126	37,4 1.472	4,0 .157	41,0 1.614	31,8 1.252	23,1 .909
24	40,9 1.61	3,7 .146	40,9 1.610	4,0 .157	44,5 1.752	34,9 1.374	23,1 .909
28	46,7 1.84	3,7 .146	46,7 1.839	4,0 .157	50,8 2.000	39,7 1.563	24,1 .949
32	53,4 2.10	4,3 .169	53,4 2.102	4,0 .157	57,0 2.244	44,5 1.752	24,1 .949
36	59,6 2.35	4,3 .169	59,6 2.346	4,0 .157	63,5 2.500	49,2 1.937	24,1 .949
40	65.5 2.58	4,3 .169	65,5 2.579	4,0 .157	69,9 2.752	55,5 2.185	24,1 .949

Conduit (EF Type) Trade Size	Suffix in Connector Part Number
3/8	(038)
1/2	(050)
3/4	(075)
1	(100)
1 1/4	(125)
1 1/2	(150)
2	(200)

Dimensions are mm. over inches

Receptacle with threaded mounting holes and an individual wire sealing grommet. For through mounting holes, see page 197. ARV type has no wire sealing grommet.

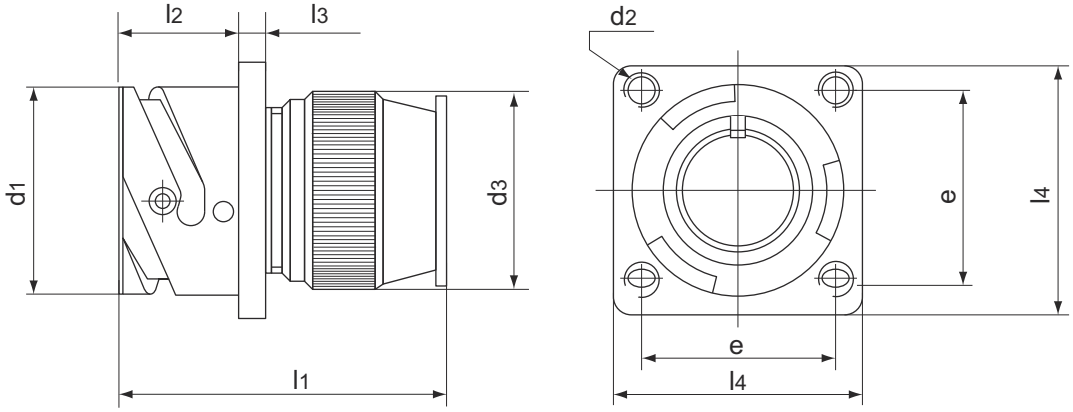

Shell Size	d_1 +0 -0,15	d_2 —	d_3 max.	e ±0,1	l_1 max.	l_2 +0,4 -0	l_3 ±0,2	l_4 ±0,3
10SL	18,2 0.72	M4	20 0.79	18,2 0.72	43 1.69	18,2 0.72	2,8 0.11	25,4 1.00
14S	24,6 0.97	M4	24 0.94	23 0.90	43 1.69	18,2 0.72	3,2 0.12	30 1.18
16S	27,4 1,08	M4	26 1.02	24,6 0.97	43 1.69	18,2 0.72	3,2 0.12	32,5 1.28
16	27,4 1,08	M4	26 1.02	24,6 0.97	56 2.20	23,05 0.91	3,2 0.12	32,5 1.28
18	30,8 1.21	M4	29,5 1.16	27 1.06	56 2.20	23,05 0.91	4 0.16	35 1.38
20	34,2 1.35	M4	33 1.30	29,4 1.16	57 2.24	23,05 0.91	4 0.16	38 1.50
22	37,4 1.47	M4	36 1.42	31,8 1.25	57 2.24	23,05 0.91	4 0.16	41 1.61
24	40,9 1.61	M4	40 1.57	34,9 1.37	57 2.24	23,05 0.91	4 0.16	44,5 1.75
28	46,7 1.84	M5	46 1.81	39,7 1.56	59 2.32	24,05 0.95	4 0.16	50,8 2.00
32	53,4 2.10	M5	51,5 2.03	44,5 1.75	60 2.36	24,05 0.95	4 0.16	57 2.24
36	59,6 2.35	M5	58 2.28	49,2 1.94	60 2.36	24,05 0.95	4 0.16	63,5 2.50
40	65,5 2.58	M5	64,5 2.54	55,5 2.18	61 2.40	24,05 0.95	4 0.16	69,9 2.75

Dimensions are mm. over inches

Receptacle with threaded mounting holes and an individual wire sealing grommet. Includes a special backshell for shield braid termination (for shielding characteristics, see page 12) To be used with heat shrinkable tubing. For through mounting holes, see page 197. ASB type has no wire sealing grommet.

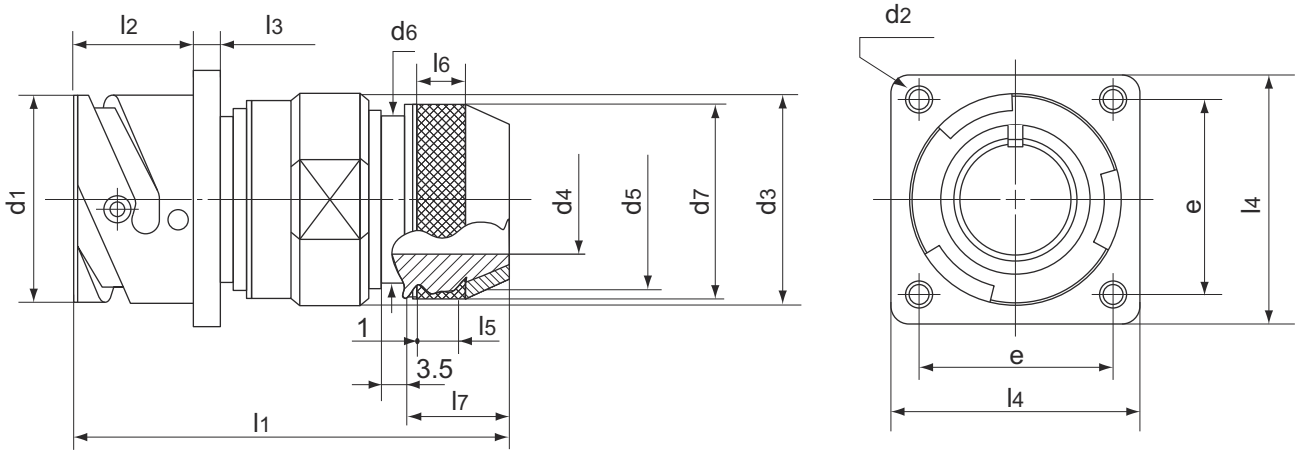

Shell Size	d_1 +0 -0,15	d_2 —	d_3 max.	d_4 min.	d_5 Thread	d_6 max.	d_7 +0,5 -0	e ±0,1	l_1 * ~	l_2 +0,4 -0	l_3 ±0,2	l_4 ±0,3	l_5 min.	l_6 ±0,5	l_7 ±0,1
10SL	18,2	M4	22	8,6	M16x1	16,3	18,5	18,2	55	18,2	2,8	25,4	4,5	5,5	17
	0.72		0.87	0.34		0.64	0.73	0.72	2.16	0.72	0.11	1.00	0.18	0.22	0.67
14S	24,6	M4	25	10,6	M20x1	20	22	23	55	18,2	3,2	30	5	7	17
	0.97		0.98	0.42		0.79	0.87	0.90	2.16	0.72	0.12	1.18	0.20	0.27	0.67
16S	27,4	M4	28	13,5	M23x1	23	25	24.6	57	18,2	3,2	32,5	6	8	18,5
	1.08		1.10	0.53		0.90	0.98	0.97	2.24	0.72	0.12	1.28	0.24	0.31	0.73
16	27,4	M4	28	13,5	M23x1	23	25	24.6	62,5	23,05	3,2	32,5	6	8	18,5
	1.08		1.10	0.53		0.90	0.98	0.97	2.46	0.91	0.12	1.28	0.24	0.31	0.73
18	30,8	M4	31	14,6	M26x1	24,5	28	27	63,7	23,05	4	35	6	8	18,5
	1.21		1.22	0.57		0.96	1.10	1.06	2.51	0.91	0.16	1.38	0.24	0.31	0.73
20	34,2	M4	35	18,5	M30x1	28,5	32	29,4	63,7	23,05	4	38	6	10	18,5
	1.35		1.38	0.73		1.12	1.26	1.16	2.51	0.91	0.16	1.50	0.24	0.39	0.73
22	37,4	M4	38	20,8	M32x1	30,5	34	31,8	63,7	23,05	4	41	6	10	18,5
	1.47		1.50	0.82		1.20	1.34	1.25	2.51	0.91	0.16	1.61	0.24	0.39	0.73
24	40,9	M4	41	24,6	M36x1	34,5	38	34,9	62,5	23,05	4	44,5	6	10	18,5
	1.61		1.61	0.97		1.36	1.50	1.37	2.46	0.91	0.16	1.75	0.24	0.39	0.73
28	46,7	M5	48	27	M39x1	37,5	41	39,7	64,4	24,05	4	50,8	6	10	18,5
	1.84		1.89	1.06		1.48	1.61	1.56	2.53	0.95	0.16	2.00	0.24	0.39	0.73
32	53,4	M5	54	33,3	M45x1	44	48	44,5	66	24,05	4	57	6	10	18,5
	2.10		2.12	1.31		1.73	1.89	1.75	2.60	0.95	0.16	2.24	0.24	0.39	0.73
36	59,6	M5	61	38,5	M52x1	51	55	49,2	66	24,05	4	63,5	6	10	18,5
	2.35		2.40	1.51		2.01	2.16	1.94	2.60	0.95	0.16	2.50	0.24	0.39	0.73
40	65,5	M5	68	46	M59x1	58	62	55.5	66	24,05	4	69,9	6	10	18,5
	2.58		2.68	1.81		2.28	2.44	2.18	2.60	0.95	0.16	2.75	0.24	0.39	0.73

* Nominal dimension with tightend backshell
Dimensions are mm. over inches

Receptacle with threaded mounting holes for terminating braided shield. Straight backshell with a swivel coupling nut and adapter suitable for use with heat shrink tubing or boot. The backshell includes a knurled extension for the shield termination via a tinel lock ring (not included). ASBT same as SBT but without a grommet.

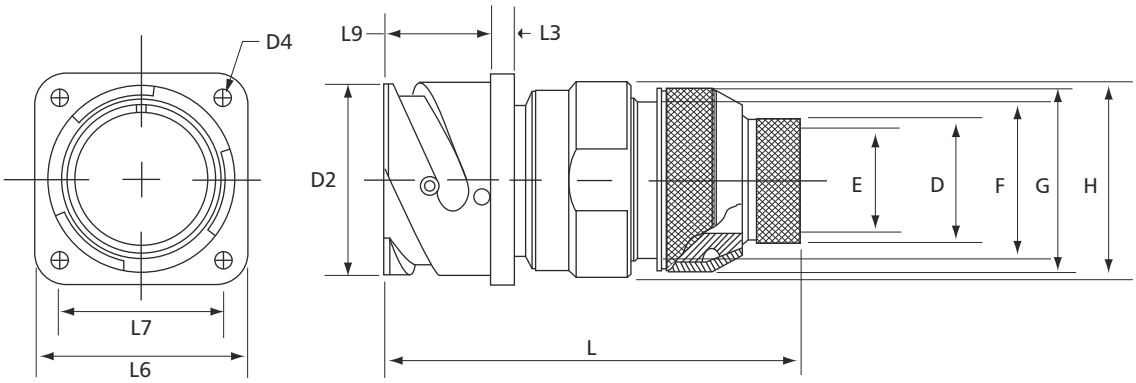

Shell Size	D_2 Max.	D_4 +/- 0,1 .004	L_3 +/- 0,2 .008	L_6 +/- 0,3 .012	L_7 +/- 0,1 .004	L_9 + 0,4 .016	H +/- 0,5 .020	G	F	E +/- 0,25 .010	D Max.	CIR030 Approx.	Tinel Ring P/N
10SL	18,2 .72	3,2 .126	2,8 .110	25,4 1.00	18,2 .717	18,2 .717	22,0 .866	18,5 .73	16,3 .64	7,9 .312	11,13 .44	64,8 2.55	TR 05
14S	24,6 .97	3,2 .126	3,2 .126	30,0 1.181	23,0 .906	18,2 .717	24,8 .976	22,0 .87	20,0 .79	11,1 .437	14,3 .56	64,8 2.55	TR 07
16S	27,4 1.08	3,2 .126	3,2 .126	32,5 1.280	24,6 .969	18,2 .717	27,8 1.094	25,0 .98	23,0 .91	12,7 .500	15,9 .63	66,8 2.63	TR 08
16	27,4 1.08	3,2 .126	3,2 .126	32,5 1.280	24,6 .969	23,1 .909	27.8 1.094	25,0 .98	23,0 .91	12,7 .500	15,9 .63	73,0 2.87	TR 08
18	30,8 1.21	3,2 .126	4,0 .157	35,0 1.378	27,0 1.063	23,1 .909	30,8 1.213	28,0 1.10	24,5 .97	15,88 .625	19,1 .75	74,2 2.92	TR 10
20	34,2 1.35	3,2 .126	4,0 .157	38,0 1.496	29,4 1.157	23,1 .909	34,8 1.370	32,0 1.26	28.5 1.12	19,05 .750	22,3 .88	75,4 2.97	TR 12
22	37,4 1.47	3,2 .126	4,0 .157	41,0 1.614	31,8 1.252	23,1 .909	37,8 1.488	34,0 1.34	30,5 1.20	22,2 .875	25,4 1.00	74,7 2.94	TR 14
24	40,9 1.61	3,7 .146	4,0 .157	44,5 1.752	34,9 1.374	23,1 .909	40,8 1.606	38,0 1.50	34,5 1.36	25,4 1.00	28,7 1.13	73,0 2.87	TR 16
28	46,7 1.84	3,7 .146	4,0 .157	50,8 2.000	39,7 1.563	24,1 .949	47,8 1.881	41,0 1.61	37,5 1.48	28,58 1.125	31,75 1.25	76,1 3.00	TR 18
32	53,4 2.10	4,3 .169	4,0 .157	57,0 2.244	44,5 1.752	24,1 .949	53,8 2.118	48,0 1.89	44,0 1.73	28,58 1.125	31,75 1.25	77,7 3.06	TR 18
36	59,6 2.35	4,3 .169	4,0 .157	63,5 2.500	49,2 1.937	24,1 .949	60,8 2.394	55,0 2.17	51,0 2.01	41,28 1.625	44,45 1.75	76,5 3.01	Not Available
40	65.5 2.58	4,3 .169	4,0 2.579	69,9 .157	55,5 2.752	24,1 2.185	67,8 2.669	62,0 2.44	58,0 2.28	47,63 1.875	50,8 2.00	76,5 3.01	Not Available

Dimensions are mm. over inches

Receptacle with threaded mounting holes for terminating jacketed cable. Long WK backshell and backnut assembly suitable to seal and grip on the jacket of the cable. WKG same as WK but includes a wire sealing grommet and compression ring.

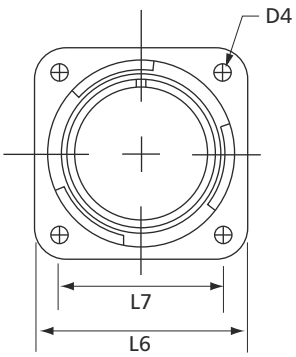

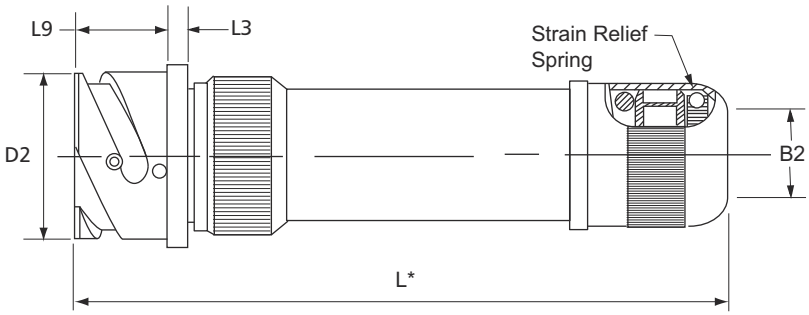

*Dimension "L" will vary from the values indicated with escalating or de-escalating backshells and some special insert configurations. Verify with our Customer Service Department.

Shell Size	D_2 Max.	D_4 +/- 0,1 .004	L_3 +/- 0,2 .008	L_6+/- 0,3 .012	L_7 +/- 0,1 .004	L_9 + 0,2 .008
10SL	18,2	3,2	2,8	25,4	18,2	18,2
	.72	.126	.110	1.00	.717	.717
14S	24,6	3,2	3,2	30,0	23,0	18,2
	.97	.126	.126	1.181	.906	.717
16S	27,4	3,2	3,2	32,5	24,6	18,2
	1.08	.126	.126	1.280	.969	.717
16	27,4	3,2	3,2	32,5	24,6	23,1
	1.08	.126	.126	1.280	.969	.909
18	30,8	3,2	4,0	35,0	27,0	23,1
	1.21	.126	.157	1.378	1.063	.909
20	34,2	3,2	4,0	38,0	29,4	23,1
	1.35	.126	.157	1.496	1.157	.909
22	37,4	3,2	4,0	41,0	31,8	23,1
	1.47	.126	.157	1.614	1.252	.909
24	40,9	3,7	4,0	44,5	34,9	23,1
	1.61	.146	.157	1.752	1.374	.909
28	46,7	3,7	4,0	50,8	39,7	24,1
	1.84	.146	.157	2.000	1.563	.949
32	53,4	4,3	4,0	57,0	44,5	24,1
	2.10	.169	.157	2.244	1.752	.949
36	59,6	4,3	4,0	63,5	49,2	24,1
	2.35	.169	.157	2.500	1.937	.949
40	65.5	4,3	4,0	69,9	55,5	24,1
	2.58	.169	2.579	.157	2.752	2.185

B2 Suffix in Connector Part No.	B2 Cable Range Min.	Max.
02	3,18	6,35
	.125	.250
03	3,99	9,53
	.157	.375
04	7,16	12,7
	.282	.500
05	10,34	15,8
	.407	.625
06	13,51	19,05
	.532	.750
07	16,69	22,23
	.657	.875
08	19,86	25,4
	.782	1.000
09	23,04	28,58
	.907	1.125
10	26,21	31,75
	1.032	1.250
11	29,39	34,93
	1.157	1.375
12	32,56	38,1
	1.282	1.500
17	50,80	53,99
	2.000	2.125

Dimensions are mm. over inches

Receptacle with threaded mounting holes for terminating braided shield. Long WK backshell, grommet, and backnut assembly suitable for shield termination and strain relief on the jacket of the cable.

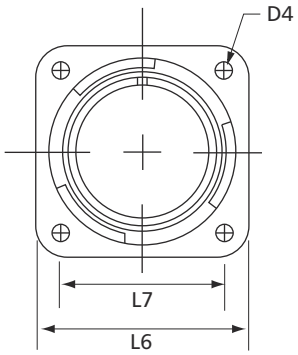

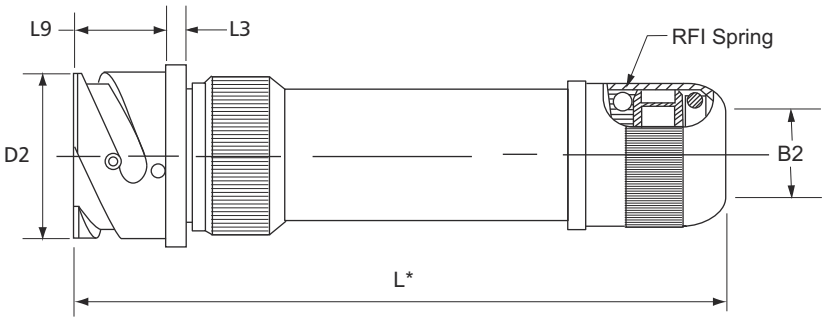

*Dimension "L" will vary from the values indicated with escalating or de-escalating backshells and some special insert configurations. Verify with our Customer Service Department.

Shell Size	D_2 Max.	D_4 +/- 0,1 .004	L_3 +/- 0,2 .008	L_6+/- 0,3 .012	L_7 +/- 0,1 .004	L_9 + 0,4 .016	L Approx.
10SL	18,2	3,2	2,8	25,4	18,2	18,2	111
	.72	.126	.110	1.00	.717	.717	4.37
14S	24,6	3,2	3,2	30,0	23,0	18,2	112
	.97	.126	.126	1.181	.906	.717	4.41
16S	27,4	3,2	3,2	32,5	24,6	18,2	100
	1.08	.126	.126	1.280	.969	.717	3.94
16	27,4	3,2	3,2	32,5	24,6	23,1	110
	1.08	.126	.126	1.280	.969	.909	4.33
18	30,8	3,2	4,0	35,0	27,0	23,1	127
	1.21	.126	.157	1.378	1.063	.909	5.00
20	34,2	3,2	4,0	38,0	29,4	23,1	127
	1.35	.126	.157	1.496	1.157	.909	5.00
22	37,4	3,2	4,0	41,0	31,8	23,1	1.33
	1.47	.126	.157	1.614	1.252	.909	5.24
24	40,9	3,7	4,0	44,5	34,9	23,1	134
	1.61	.146	.157	1.752	1.374	.909	5.28
28	46,7	3,7	4,0	50,8	39,7	24,1	134
	1.84	.146	.157	2.000	1.563	.949	5.28
32	53,4	4,3	4,0	57,0	44,5	24,1	136
	2.10	.169	.157	2.244	1.752	.949	5.35
36	59,6	4,3	4,0	63,5	49,2	24,1	136
	2.35	.169	.157	2.500	1.937	.949	5.35
40	65.5	4,3	4,0	69,9	55,5	24,1	136
	2.58	.169	2.579	.157	2.752	2.185	.949

B2 Suffix in Connector Part No.	B2 Cable Range Min.	Max.
02	3,18	6,35
	.125	.250
03	3,99	9,53
	.157	.375
04	7,16	12,7
	.282	.500
05	10,34	15,8
	.407	.625
06	13,51	19,05
	.532	.750
07	16,69	22,23
	.657	.875
08	19,86	25,4
	.782	1.000
09	23,04	28,58
	.907	1.125
10	26,21	31,75
	1.032	1.250
11	29,39	34,93
	1.157	1.375
12	32,56	38,1
	1.282	1.500
17	50,80	53,99
	2.000	2.125

Dimensions are mm. over inches

Specifications and dimensions subject to change
Dimensions shown in mm.

Receptacle with threaded mounting holes, 90º elbow and cable clamp with bushing. F type has an individual wire sealing grommet. For through mounting holes, see page 197.

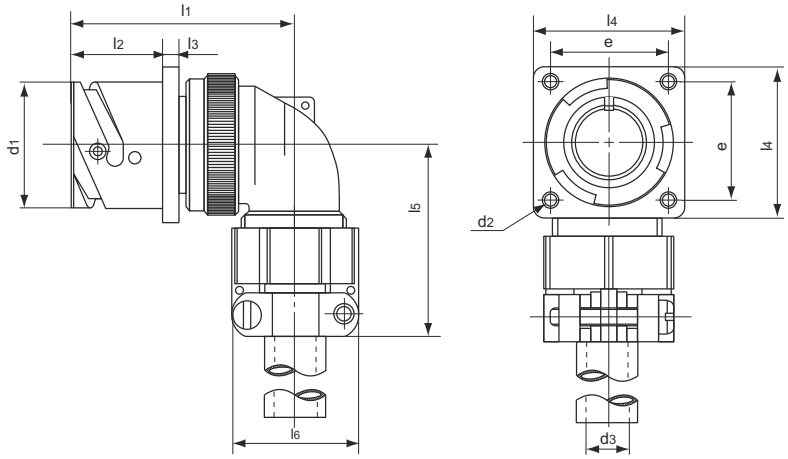

Shell Size	d_1 +0 -0,15	d_2 —	d_3 * max.	e ±0,1	l_1 max.	l_2 +0,4 -0	l_3 ±0,2	l_4 ±0,3	l_5 max.	l_6 max.
10SL	18,2	M4	5,6	18,2	45	18,2	2,8	25,4	42	22,7
	0.72		0.22	0.72	1.77	0.72	0.11	1.00	1.65	0.89
14S	24,6	M4	7,9	23	47	18,2	3,2	30	42	27,5
	0.97		0.31	0.90	1.85	0.72	0.12	1.18	1.65	1.08
16S	27,4	M4	11	24,6	48	18,2	3,2	32,5	45	30
	1,08		0.43	0.97	1.89	0.72	0.12	1.28	1.77	1.18
16	27,4	M4	11	24,6	57	23,05	3,2	32,5	45	30
	1,08		0.43	0.97	2.24	0.91	0.12	1.28	1.77	1.18
18	30,8	M4	14,2	27	58	23,05	4	35	53	32,2
	1.21		0.56	1.06	2.28	0.91	0.16	1.38	2.09	1.27
20	34,2	M4	15,8	29,4	61	23,05	4	38	53	37,5
	1.35		0.62	1.16	2.40	0.91	0.16	1.50	2.09	1.48
22	37,4	M4	15,8	31,8	61	23,05	4	41	53	37,5
	1.47		0.62	1.25	2.40	0.91	0.16	1.61	2.09	1.48
24	40,9	M4	19	34,9	66	23,05	4	44,5	58	43,3
	1.61		0.75	1.37	2.60	0.91	0.16	1.75	2.28	1.70
28	46,7	M5	19	39,7	66	24,05	4	50,8	58	43,3
	1.84		0.75	1.56	2.60	0.95	0.16	2.00	2.28	1.70
32	53,4	M5	23,8	44,5	72	24,05	4	57	66	51,7
	2.10		0.94	1.75	2.83	0.95	0.16	2.24	2.60	2.03
36	59,6	M5	31,7	49,2	75	24,05	4	63,5	69	58
	2.35		1.25	1.94	2.95	0.95	0.16	2.50	2.72	2.28
40	65,5	M5	34,9	55,5	78	24,05	4	69,9	95	68.5
	2.58		1.37	2.18	3.07	0.95	0.16	2.75	3.74	2.70

* Max. permissible outside diameter of cable.
Dimensions are mm. over inches

Receptacle with threaded mounting holes, 90º elbow and an individual wire sealing grommet. A type has no grommet. For through mounting holes, see page 197.

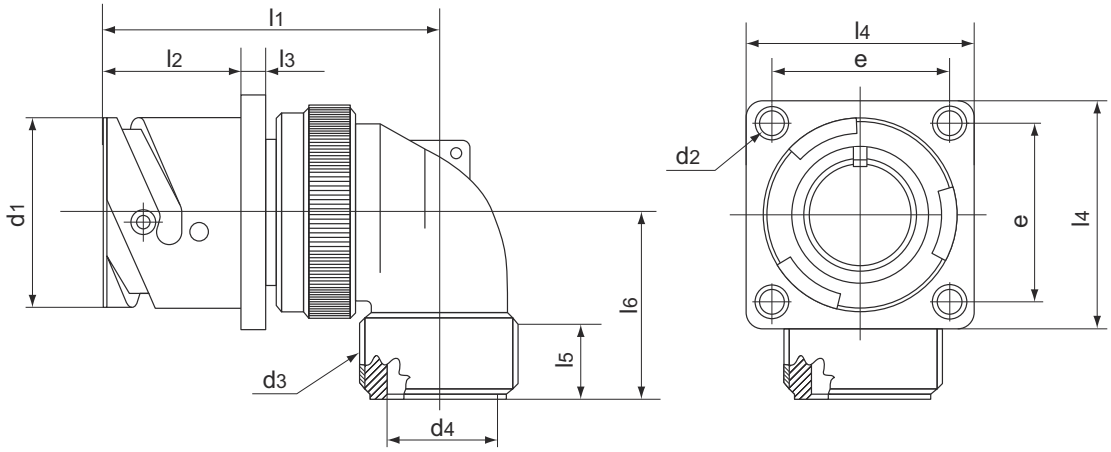

Shell Size	d_1 +0 -0,15	d_2 —	d_3 Thread in inches	d_4 +0,2 -0,1	e ±0,1	l_1 max.	l_2 +0,4 -0	l_3 ±0,2	l_4 ±0,3	l_5 min.	l_6 max.
10SL	18,2	M4	5/8-24 UNEF-2A	10,5	18,2	45	18,2	2,8	25,4	9,4	30
	0.72			0.41	0.72	1.77	0.72	0.11	1.00	0.37	1.18
14S	24,6	M4	3/4-20 UNEF-2A	11,5	23	47	18,2	3,2	30	9,4	30
	0.97			0.45	0.90	1.85	0.72	0.12	1.18	0.37	1.18
16S	27,4	M4	7/8-20 UNEF-2A	14,7	24,6	48	18,2	3,2	32,5	9,4	30
	1.08			0.58	0.97	1.89	0.72	0.12	1.28	0.37	1.18
16	27,4	M4	7/8-20 UNEF-2A	14,7	24,6	57	23,05	3,2	32,5	9,4	30
	1.08			0.58	0.97	2.24	0.91	0.12	1.28	0.37	1.18
18	30,8	M4	1”-20 UNEF-2A	17,2	27	58	23,05	4	35	9,54	35
	1.21			0.68	1.06	2.28	0.91	0.16	1.38	0.375	1.38
20	34,2	M4	1”3/16-18 UNEF-2A	20,35	29,4	61	23,05	4	38	9,4	35
	1.35			0.80	1.16	2.40	0.91	0.16	1.50	0.37	1.38
22	37,4	M4	1”3/16-18 UNEF-2A	23	31,8	61	23,05	4	41	9,4	35
	1.47			0.90	1.25	2.40	0.91	0.16	1.61	0.37	1.38
24	40,9	M4	1”7/16-18 UNEF-2A	25,8	34,9	66	23,05	4	44,5	9,5	40
	1.61			1.015	1.37	2.60	0.91	0.16	1.75	0.374	1.57
28	46,7	M5	1”7/16-18 UNEF-2A	25,7	39,7	66	24,05	4	50,8	9,5	40
	1.84			1.011	1.56	2.60	0.95	0.16	2.00	0.374	1.57
32	53,4	M5	1”3/4-18 UNS-2A	36,5	44,5	72	24,05	4	57	11	45
	2.10			1.44	1.75	2.83	0.95	0.16	2.24	0.43	1.77
36	59,6	M5	2”-18 UNS-2A	42,6	49,2	75	24,05	4	63,5	12,6	50
	2.35			1.68	1.94	2.95	0.95	0.16	2.50	0.50	1.97
40	65,5	M5	2”1/4-16 UN-2A	48,6	55,5	78	24,05	4	69,9	12,6	55
	2.58			1.91	2.18	3.07	0.95	0.16	2.75	0.50	2.16

Dimensions are mm. over inches

Thru-Bulkhead receptacle with threaded mounting holes. For through mounting holes, see page 197.

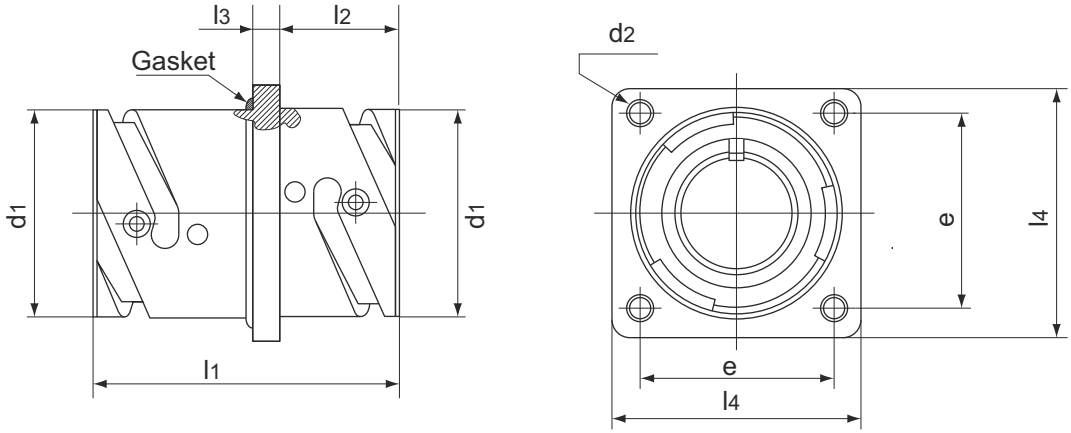

Shell Size	d_1 +0 -0,15	d_2 —	e ±0,1	l_1 ±0,7	l_2 +0,4 -0	l_3 ±0,2	l_4 ±0,3
10SL	18,2 0.72	M4	18,2 0.72	37,5 1.48	14,2 0.56	2,8 0.11	25,4 1.00
14S	24,6 0.97	M4	23 0.90	37,5 1.48	14,2 0.56	3,2 0.12	30 1.18
16S	27,4 1.08	M4	24,6 0.97	37,5 1.48	14,2 0.56	3,2 0.12	32,5 1.28
16	27,4 1.08	M4	24,6 0.97	51,4 2.02	19 0.75	3,2 0.12	32,5 1.28
18	30,8 1.21	M4	27 1.06	51,4 2.02	19 0.75	4 0.16	35 1.38
20	34,2 1.35	M4	29,4 1.16	51,4 2.02	19 0.75	4 0.16	38 1.50
22	37,4 1.47	M4	31,8 1.25	51,4 2.02	19 0.75	4 0.16	41 1.61
24	40,9 1.61	M4	34,9 1.37	51,4 2.02	20,6 0.81	4 0.16	44,5 1.75
28	46,7 1.84	M5	39,7 1.56	51,4 2.02	20,6 0.81	4 0.16	50,8 2.00
32	53,4 2.10	M5	44,5 1.75	51,4 2.02	22,2 0.87	4 0.16	57 2.24
36	59,6 2.35	M5	49,2 1.94	51,4 2.02	22,2 0.87	4 0.16	63,5 2.50
40	65,5 2.58	M5	55,5 2.18	51,4 2.02	22,2 0.87	4 0.16	69,9 2.75

Dimensions are mm. over inches

Panel mounting plug connector.

Order reference:
CIR26 - 36 - 10P - F80 (crimp)
CIR26 - 36 - 10P - (solder)

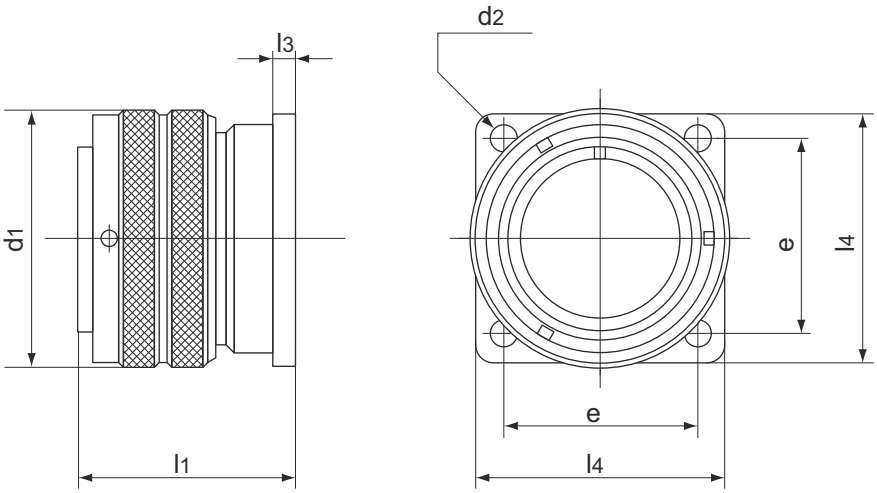

Shell Size	d_1 max.	d_2 H13	e ±0,1	l_1 ~	l_3 ±0,2	l_4 ±0,3
10SL	22,8	3,2	18,2	28,1	2,8	25,4
	0.90	0.12	0.72	1.11	0.11	1.00
14S	29,2	3,2	23	28,1	3,2	30,0
	1.15	0.12	0.90	1.11	0.12	1.18
16S	32	3,2	24,6	28,1	3,2	32,5
	1.26	0.12	0.97	1.11	0.12	1.28
16	32	3,2	24,6	37,6	3,2	32,5
	1.26	0.12	0.97	1.48	0.12	1.28
18	36,5	3,2	27	37,6	4,0	35,0
	1.44	0.12	1.06	1.48	0.16	1.38
20	39,9	3,2	29,4	38,6	4,0	38,0
	1.57	0.12	1.16	1.52	0.16	1.50
22	43,1	3,2	31,8	37,6	4,0	41,0
	1.70	0.12	1.25	1.48	0.16	1.61
24	46,6	3,7	34,9	41,0	4,0	44,5
	1.83	0.14	1.37	1.61	0.16	1.75
28	53,4	3,7	39,7	41,8	4,0	50,8
	2.10	0.14	1.56	1.64	0.16	2.00
32	60,1	4,3	44,5	45,0	4,0	57,0
	2.37	0.17	1.75	1.77	0.16	2.24
36	66,3	4,3	49,2	43,0	4,0	63,5
	2.61	0.17	1.94	1.69	0.16	2.50
40	72,5	4,3	55,5	45,0	4,0	69,9
	2.85	0.17	2.18	1.77	0.16	2.75

Dimensions are mm. over inches

Receptacle single hole mount without rear accessories. For panel mounting hole dimensions, see page 196.

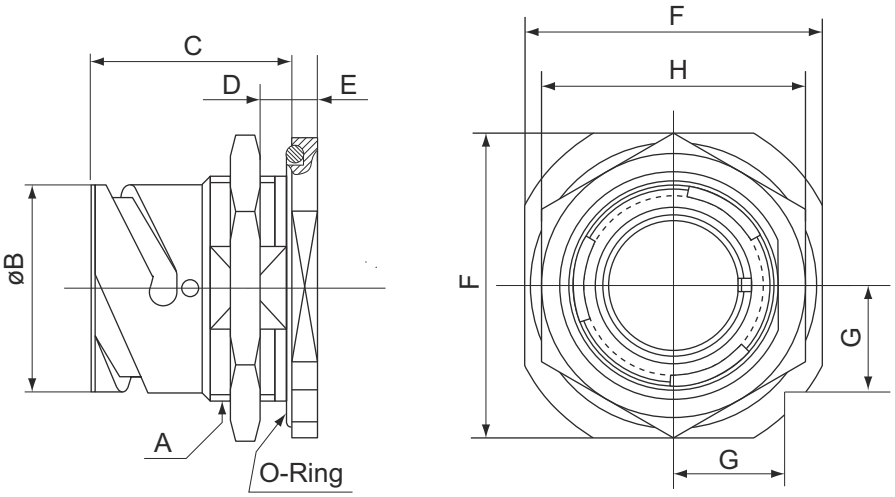

Shell Size	A Thread in inches	ø B +0 -0,15	C —	D Wall Thickness min.	D Wall Thickness max.	E ~	F ±0,25	G ~	H —
10SL	7/8-20 UNEF-2A	18,2	24,5	2,4	5,2	4	31,8	11,2	27
		0.72	0.96	0.09	0.20	0.16	1.25	0.44	1.06
14S	1"1/8-18 UNEF-2A	24,6	26,8	2,4	7,5	4,8	41,3	14,6	33
		0.97	1.05	0.09	0.29	1.89	1.62	0.57	1.30
*16S	1"1/4-18 UNEF-2A	27,4	26,8	2,4	7,5	4,8	44,4	15,7	38,1
		1.08	1.05	0.09	0.29	1.89	1.75	0.62	1.50
*16	1"1/4-18 UNEF-2A	27,4	32,1	2,4	7,5	4,8	44,4	15,7	38,1
		1.08	1.26	0.09	0.29	1.89	1.75	0.62	1.50
18	1"3/8-18 UNEF-2A	30,8	33,7	2,4	9	4,8	47,6	16,8	39,7
		1.21	1.33	0.09	0.35	1.89	1.87	0.66	1.56
20	1"1/2-18 UNEF-2A	34,2	33,7	2,4	9	4,8	50,8	18	44
		1.35	1.33	0.09	0.35	1.89	2.00	0.71	1.73
22	1"5/8-18 UNEF-2A	37,4	33,7	2,4	9,1	4,8	54,2	20,2	46
		1.47	1.33	0.09	0.36	1.89	2.13	0.79	1.81
24	1"3/4-18 UNS-2A	40,9	33,7	2,4	9,1	4,8	57,2	20,2	50,8
		1.61	1.33	0.09	0.36	1.89	2.25	0.79	2.00
28	2"-18 UNS-2A	46,7	35,2	2,4	8,5	5,6	63,5	22,5	55
		1.84	1.38	0.09	0.33	0.22	2.50	0.88	2.16
32	2"1/4-16 UN-2A	53,4	35,2	2,4	6,5	5,6	69,8	24,7	62
		2.10	1.38	0.09	0.25	0.22	2.75	0.97	2.44
36	2"1/2-16 UN-2A	59,6	35,2	2,4	8,3	5,6	76,2	26,9	71
		2.35	1.38	0.09	0.33	0.22	3.00	1.06	2.79
40	2"3/4-16 UN-2A	65,5	35,2	2,4	8,3	5,6	83,5	29,6	75
		2.58	1.38	0.09	0.33	0.22	3.29	1.16	2.95

* Consult Factory

Dimensions are mm. over inches

Receptacle single hole mount with threaded back end. Available only with crimp type contact. For panel mounting hole dimensions, see page 196.

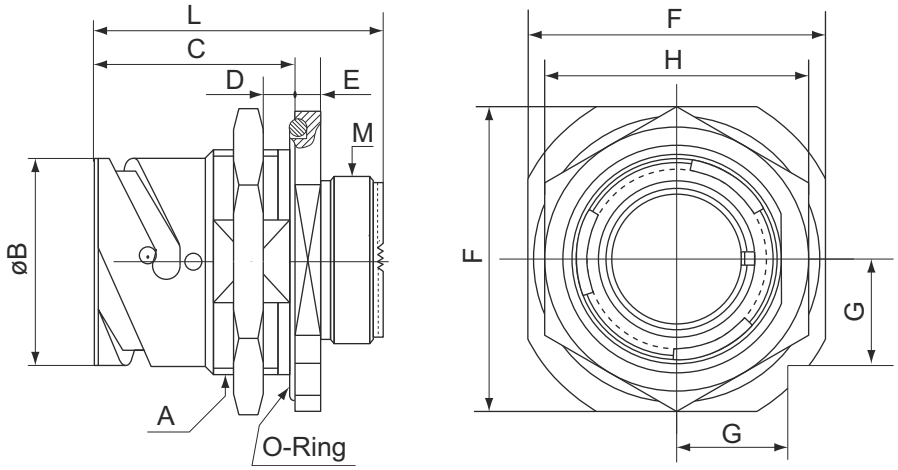

Shell Size	A Thread in inches	ø B +0 -0,15	C —	D Wall Thickness min.	D Wall Thickness max.	E —	F ± 0,25	G —	H —	L ± 0,25	M Thread in inches
10SL	7/8-20 UNEF-2A	18,2	24,5	2,4	5,2	4	31,8	11,2	27	36,2	5/8-24 UNEF-2A
		0.72	0.96	0.09	0.20	0.16	1.25	0.44	1.06	1.42	
14S	1"1/8-18 UNEF-2A	24,6	26,8	2,4	7,5	4,8	41,3	14,6	33	38,9	3/4-20 UNEF-2A
		0.97	1.05	0.09	0.29	1.89	1.62	0.57	1.30	1.53	
*16S	1"1/4-18 UNEF-2A	27,4	26,8	2,4	7,5	4,8	44,4	15,7	38,1	38,9	7/8-20 UNEF-2A
		1.08	1.05	0.09	0.29	1.89	1.75	0.62	1.50	1.53	
*16	1"1/4-18 UNEF-2A	27,4	32,1	2,4	7,5	4,8	44,4	15,7	38,1	48,5	7/8-20 UNEF-2A
		1.08	1.26	0.09	0.29	1.89	1.75	0.62	1.50	1.91	
18	1"3/8-18 UNEF-2A	30,8	33,7	2,4	9	4,8	47,6	16,8	39,7	49,3	1"-20 UNEF-2A
		1.21	1.33	0.09	0.35	1.89	1.87	0.66	1.56	1.94	
20	1"1/2-18 UNEF-2A	34,2	33,7	2,4	9	4,8	50,8	18	44	49,3	1"1/8-18 UNEF-2A
		1.35	1.33	0.09	0.35	1.89	2.00	0.71	1.73	1.94	
22	1"5/8-18 UNEF-2A	37,4	33,7	2,4	9,1	4,8	54,2	20,2	46	49,3	1"1/4-18 UNEF-2A
		1.47	1.33	0.09	0.36	1.89	2.13	0.79	1.81	1.94	
24	1"3/4-18 UNS-2A	40,9	33,7	2,4	9,1	4,8	57,2	20,2	50,8	49,3	1"3/8-18 UNEF-2A
		1.61	1.33	0.09	0.36	1.89	2.25	0.79	2.00	1.94	
28	2"-18 UNS-2A	46,7	35,2	2,4	8,5	5,6	63,5	22,5	55	51,9	1"5/8-18 UNEF-2A
		1.84	1.38	0.09	0.33	0.22	2.50	0.88	2.16	2.04	
32	2"1/4-16 UN-2A	53,4	35,2	2,4	6,5	5,6	69,8	24,7	62	51,9	1"7/8-16 UN-2A
		2.10	1.38	0.09	0.25	0.22	2.75	0.97	2.44	2.04	
36	2"1/2-16 UN-2A	59,6	35,2	2,4	8,3	5,6	76,2	26,9	71	51,9	2"1/16-16 UN-2A
		2.35	1.38	0.09	0.33	0.22	3.00	1.06	2.79	2.04	
40	2"3/4-16 UN-2A	65,5	35,2	2,4	8,3	5,6	83,5	29,6	75	51,9	2"5/16-16 UN-2A
		2.58	1.38	0.09	0.33	0.22	3.29	1.16	2.95	2.04	

Note: Rear teeth on this style receptacle shell are included only with G2, SB, SBT, classes or with 08 backshell

* Consult Factory

Dimensions are mm. over inches

Jam nut receptacle for terminating braided shield. Straight backshell with a swivel coupling nut and adapter suitable for use with heat shrink tubing or boot. The backshell includes a knurled extension for the shield termination via a tinel lock ring (not included). ASBT same as SBT but without a grommet.

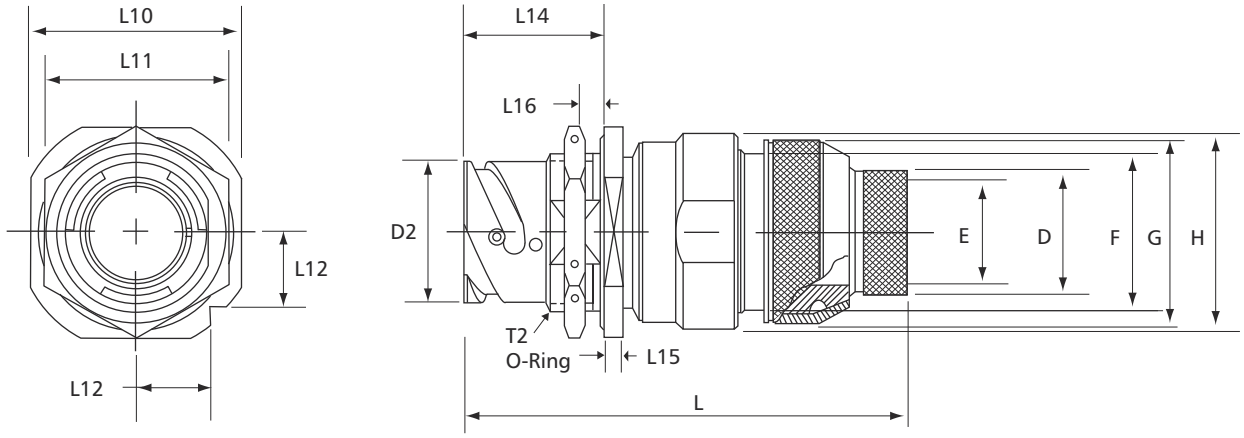

Shell Size	D_2 Max.	L_{10} +/- 0,25	L_{11}	L_{12}	L_{14}	L_{15}	L_{16} Panel Min.	L_{16} Panel Max.	T2 Thread	H +/- 0,5 .020	G	F	E +/- 0,25 .010	D Max.	L CIR070 Approx.	Tinel Ring P/N
10SL	18,2	31,8	27,0	11,2	24,5	4,0	2,4	5,2	7/8-20UNEF	22,0	18,5	16,3	7,9	11,13	72,6	TR 05
	.72	1.25	1.063	.44	.97	.16	.094	.205		.866	.73	.64	.312	.44	2.86	
14S	24,6	41,3	33,0	14,6	26,8	4,8	2,4	7,5	1 1/8-18UNEF	24,8	22,0	20,0	11,1	14,3	75,3	TR 07
	.97	1.63	1.299	.575	1.06	.19	.094	.295		.976	.87	.79	.437	.56	2.96	
16S	27,4	44,4	38,1	15,7	26,8	4,8	2,4	7,5	1 1/4-18UNEF	27,8	25,0	23,0	12,7	15,9	78,1	TR 08
	1.08	1.75	1.500	.62	1.06	.19	.094	.295		1.094	.98	.91	.500	.63	3.07	
16	27,4	44,4	38,1	15,7	32,1	4,8	2,4	7,5	1 1/4-18UNEF	27.8	25,0	23,0	12,7	15,9	86,9	TR 08
	1.08	1.75	1.500	.62	1.26	.19	.094	.295		1.094	.98	.91	.500	.63	3.42	
18	30,8	47,6	39,7	16,8	33,7	4,8	2,4	9,0	1 3/8-18UNEF	30,8	28,0	24,5	15,88	19,1	88,9	TR 10
	1.21	1.87	1.563	.66	1.33	.19	.094	.354		1.213	1.10	.97	.625	.75	3.50	
20	34,2	50,8	44,0	18	33,7	4,8	2,4	9,0	1 1/2-18UNEF	34,8	32,0	28.5	19,05	22,3	90,1	TR 12
	1.35	2.00	1.732	.71	1.33	.19	.094	.354		1.370	1.26	1.12	.750	.88	3.55	
22	37,4	54,2	46,0	20,2	33,7	4,8	2,4	9,1	1 5/8-18UNEF	37,8	34,0	30,5	22,2	25,4	89,4	TR 14
	1.47	2.25	1.811	.80	1.33	.19	.094	.358		1.488	1.34	1.20	.875	1.00	3.52	
24	40,9	57,2	50,8	20,2	33,7	4,8	2,4	9,1	1 3/4-18UNEF	40,8	38,0	34,5	25,4	28,7	87,7	TR 16
	1.61	2.25	2.000	.80	1.33	.19	.094	.358		1.606	1.50	1.36	1.00	1.13	3.45	
28	46,7	63,5	55,0	22,5	35,2	5,6	2,4	8,5	2.00-18UNS	47,8	41,0	37,5	28,58	31,75	91,5	TR 18
	1.84	2.50	2.165	.89	1.39	.22	.094	.335		1.881	1.61	1.48	1.125	1.25	3.60	
32	53,4	69,8	62,0	24,7	35,2	5,6	2,4	6,5	2 1/4-16UN	53,8	48,0	44,0	28,58	31,75	91,5	TR 18
	2.10	2.75	2.441	.97	1.39	.22	.094	.256		2.118	1.89	1.73	1.125	1.25	3.60	
36	59,6	76,2	71,0	26,9	35,2	5,6	2,4	8,3	2 1/2-16UN	60,8	55,0	51,0	41,28	44,45	90,3	Not Available
	2.35	3.00	2.795	1.06	1.39	.22	.094	.327		2.394	2.17	2.01	1.625	1.75	3.56	
40	65.5	83,5	75,0	29,6	35,2	5,6	2,4	8,3	2 3/4-16UN	67,8	62,0	58,0	47,63	50,8	90,3	Not Available
	2.58	3.29	2.953	1.17	1.39	.22	.094	.327		2.669	2.44	2.28	1.875	2.00	3.56	

Dimensions are mm. over inches

Receptacle single hole mount with 90º elbow and an individual wire sealing grommet. A type has no grommet.Available only with crimp type contacts. For panel mounting hole dimensions, see page 196.

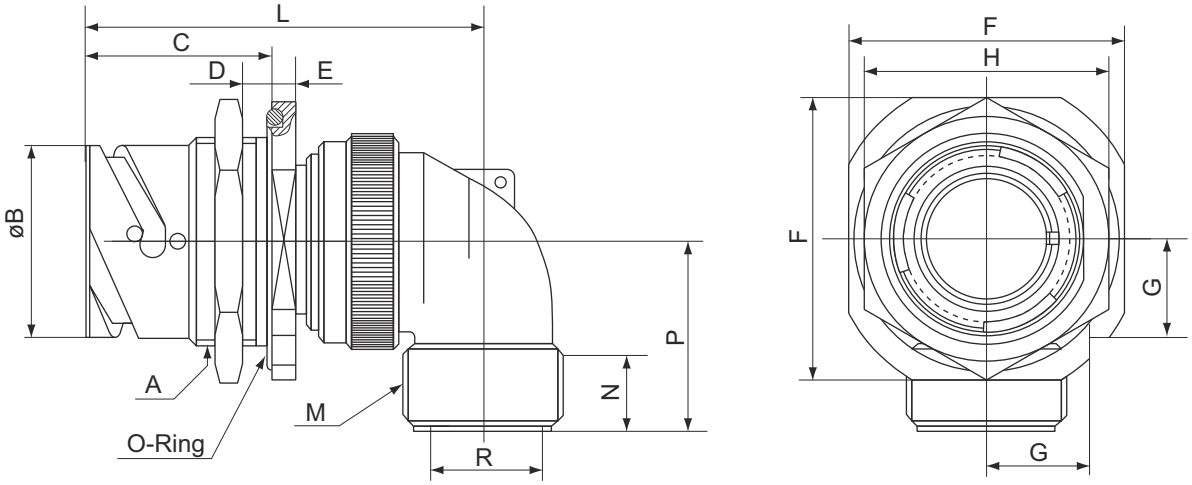

Shell Size	A Thread in inches	ø B +0 -0,15	C —	D Wall Thickness min.	D Wall Thickness max.	E —	F ±0,25	G —	H —	L ~	M Thread in inches	N min.	P max.	R +0,2 -0,1
10SL	7/8-20 UNEF-2A	18,2	24,5	2,4	5,2	4	31,8	11,2	27	49	5/8-24 UNEF-2A	9,4	30	10,5
		0.72	0.96	0.09	0.20	0.16	1.25	0.44	1.06	1.93		0.37	1.18	0.41
14S	1"1/8-18 UNEF-2A	24,6	26,8	2,4	7,5	4,8	41,3	14,6	33	53	3/4-20 UNEF-2A	9,4	30	11,5
		0.97	1.05	0.09	0.29	1.89	1.62	0.57	1.30	2.09		0.37	1.18	0.45
*16S	1"1/4-18 UNEF-2A	27,4	26,8	2,4	7,5	4,8	44,4	15,7	38,1	58	7/8-20 UNEF-2A	9,4	30	14,7
		1.08	1.05	0.09	0.29	1.89	1.75	0.62	1.50	2.28		0.37	1.18	0.58
*16	1"1/4-18 UNEF-2A	27,4	32,1	2,4	7,5	4,8	44,4	15,7	38,1	66	7/8-20 UNEF-2A	9,4	30	14,7
		1.08	1.26	0.09	0.29	1.89	1.75	0.62	1.50	2.60		0.37	1.18	0.58
18	1"3/8-18 UNEF-2A	30,8	33,7	2,4	9	4,8	47,6	16,8	39,7	72	1"-20 UNEF-2A	9,4	35	17,2
		1.21	1.33	0.09	0.35	1.89	1.87	0.66	1.56	2.83		0.37	1.38	0.68
20	1"1/2-18 UNEF-2A	34,2	33,7	2,4	9	4,8	50,8	18	44	75	1"3/16-18 UNEF-2A	9,4	35	20,35
		1.35	1.33	0.09	0.35	1.89	2.00	0.71	1.73	2.95		0.37	1.38	0.80
22	1"5/8-18 UNEF-2A	37,4	33,7	2,4	9,1	4,8	54,2	20,2	46	75	1"3/16-18 UNEF-2A	9,4	35	23
		1.47	1.33	0.09	0.36	1.89	2.13	0.79	1.81	2.95		0.37	1.38	0.90
24	1"3/4-18 UNS-2A	40,9	33,7	2,4	9,1	4,8	57,2	20,2	50,8	77	1"7/16-18 UNEF-2A	9,4	40	25,8
		1.61	1.33	0.09	0.36	1.89	2.25	0.79	2.00	3.03		0.37	1.57	1.01
28	2"-18 UNS-2A	46,7	35,2	2,4	8,5	5,6	63,5	22,5	55	79	1"7/16-18 UNEF-2A	9,4	40	28,7
		1.84	1.38	0.09	0.33	0.22	2.50	0.88	2.16	3.11		0.37	1.57	1.13
32	2"1/4-16 UN-2A	53,4	35,2	2,4	6,5	5,6	69,8	24,7	62	84	1"3/4-18 UNS-2A	11	45	36,5
		2.10	1.38	0.09	0.25	0.22	2.75	0.97	2.44	3.31		0.43	1.77	1.44
36	2"1/2-16 UN-2A	59,6	35,2	2,4	8,3	5,6	76,2	26,9	71	87	2"- 18 UNS-2A	12,6	50	42,6
		2.35	1.38	0.09	0.33	0.22	3.00	1.06	2.79	3.42		0.50	1.97	1.68
40	2"3/4-16 UN-2A	65,5	35,2	2,4	8,3	5,6	83,5	29,6	75	90	2"1/4-16 UN-2A	12,6	55	48,6
		2.58	1.38	0.09	0.33	0.22	3.29	1.16	2.95	3.54		0.50	2.16	1.91

* Consult Factory

Dimensions are mm. over inches

Plug without accessories. CIRG type has"RFI" shield spring (for shielding characteristics see page 12).

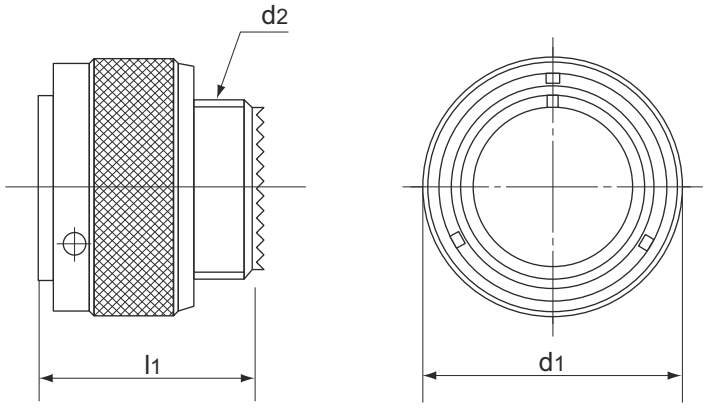

IMPORTANT

Above connectors are supplied (as in the picture) only when accessories are ordered separately. Consult factory.

Shell Size	d_1 max.	d_2 Thread in inches	l_1 ± 0,3
10SL	22,8 0.90	5/8 - 24 UNEF-2A	24,6 0.97
14S	29,2 1.15	3/4 - 20 UNEF-2A	24,6 0.97
16S	32 1.26	7/8 - 20 UNEF-2A	24,6 0.97
16	32 1.26	7/8 - 20 UNEF-2A	34,1 1.34
18	36,5 1.44	1" - 20 UNEF-2A	34,1 1.34
20	39,9 1.57	1"1/8 -18 UNEF-2A	34,1 1.34
22	43,1 1.70	1"1/4 -18 UNEF-2A	34,1 1.34
24	46,6 1.83	1"3/8 -18 UNEF-2A	35,7 1.40
28	53,4 2.10	1"5/8 -18 UNEF-2A	35,7 1.40
32	60,1 2.37	1"7/8 -16 UN-2A	37,3 1.47
36	66,3 2.61	2" 1/16 -16 UN-2A	37,3 1.47
40	72,5 2.85	2"5/16 -16 UN-2A	37,3 1.47

Dimensions are mm. over inches

Straight plug with PG (DIN 40430) threaded backshell.

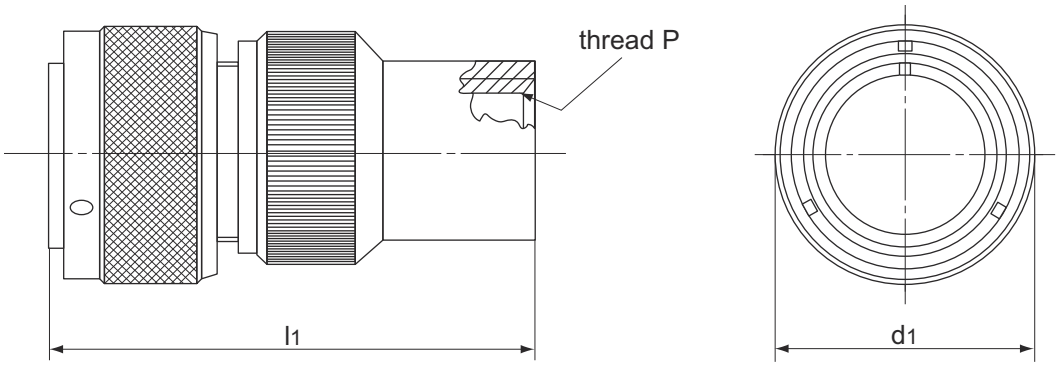

Shell Size	d_1 max.	l_1 max.	P thread
10SL	22,8 0.90	53 2.09	PG (DIN 40430) Dimension of the P thread has to be decided when B/S is ordered.
14S	29,2 1.15	58 2.28	
16S	32 1.26	58 2.28	
16	32 1.26	75 2.95	
18	36,5 1.44	82 3.23	
20	39,9 1.57	82 3.23	
22	43,1 1.70	82 3.23	
24	46,6 1.83	92 3.62	
28	53,4 2.10	92 3.62	
32	60,1 2.37	92 3.62	
36	66,3 2.61	92 3.62	
40	72,5 2.85	92 3.62	

Connector P/N has to be defined on the basis of customer need (example: connector with grommet, gaskets, etc.)
Dimensions are mm. over inches

Straight plug with UNI ISO 7/1 Rp (GAS) threaded backshell.

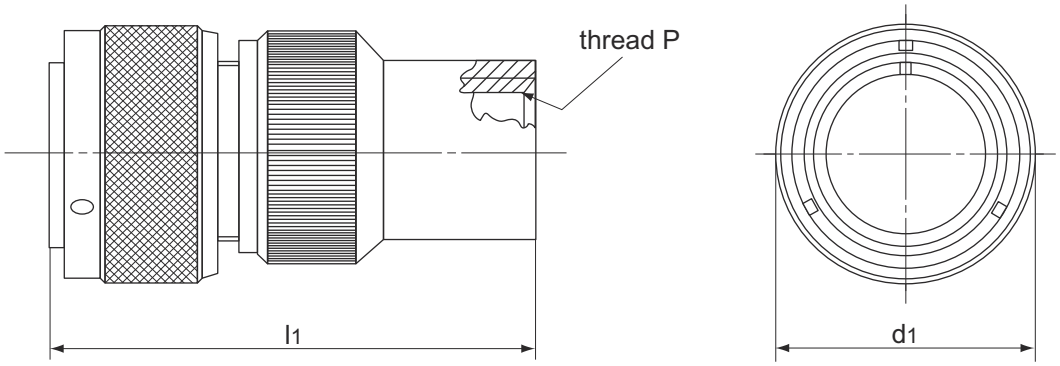

Shell Size	d_1 max.	l_1 max.	UNI ISO 7/1 Rp P thread
10SL	22,8 0.90	53 2.09	Dimension of the P thread has to be decided when B/S is ordered.
14S	29,2 1.15	58 2.28	
16S	32 1.26	58 2.28	
16	32 1.26	75 2.95	
18	36,5 1.44	75 2.95	
20	39,9 1.57	75 2.95	
22	43,1 1.70	78 3.07	
24	46,6 1.83	78 3.07	
28	53,4 2.10	82 3.23	
32	60,1 2.37	84 3.31	
36	66,3 2.61	86 3.38	
40	72,5 2.85	95 3.74	

Connector P/N has to be defined on the basis of customer need (example: connector with grommet, gaskets, etc.)
Dimensions are mm. over inches

Straight plug with backshell. CIRG type has "RFI" shield spring (for shielding characteristics see page 12). R type has an individual wire sealing grommet.

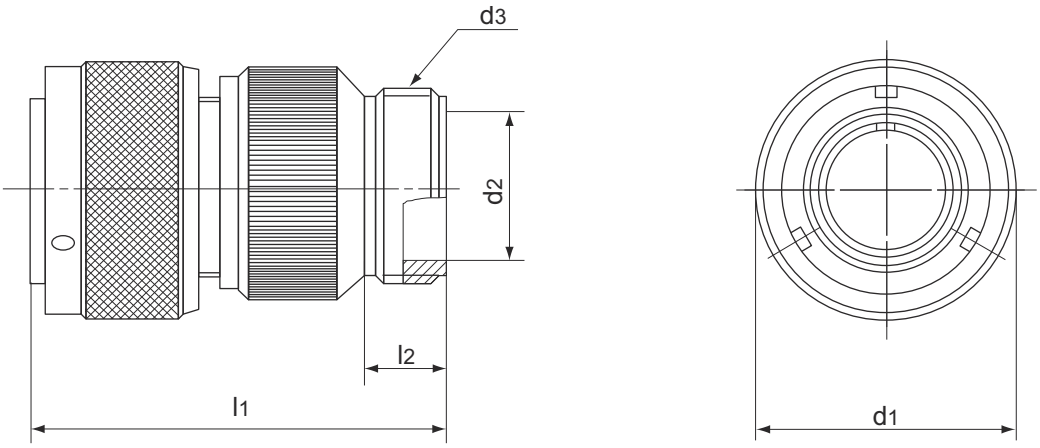

Shell Size	d_1 max.	d_2 +0,1 -0	d_3 Thread in inches	l_1 max.	l_2 min.
10SL	22,8 0.90	10,4 0.41	5/8 -24 UNEF-2A	43 1.69	9,5 0.37
14S	29,2 1.15	13,2 0.52	3/4 -20 UNEF-2A	47 1.85	9,5 0.37
16S	32 1.26	16,2 0.64	7/8 -20 UNEF-2A	47 1.85	9,5 0.37
16	32 1.26	16,2 0.64	7/8 -20 UNEF-2A	58 2.28	9,5 0.37
18	36,5 1.44	19,2 0.75	1" -20 UNEF-2A	58 2.28	9,5 0.37
20	39,9 1.57	22 0.87	1"3/16 -18 UNEF-2A	58 2.28	9,5 0.37
22	43,1 1.70	24,5 0.96	1"3/16 -18 UNEF-2A	59 2.32	9,5 0.37
24	46,6 1.83	27,8 1.09	1"7/16 -18 UNEF-2A	61 2.40	9,5 0.37
28	53,4 2.10	31,2 1.23	1"7/16 -18 UNEF-2A	67 2.64	9,5 0.37
32	60,1 2.37	37,8 1.49	1"3/4 -18 UNS-2A	71 2.79	11 0.43
36	66,3 2.61	45 1.77	2" -18 UNS-2A	71 2.79	11,8 0.46
40	72,5 2.85	51,2 2.01	2"1/4 -16 UN-2A	86 3.38	11,8 0.46

Dimensions are mm. over inches

Straight plug with backshell and rubber covered coupling nut for protection against dust and impact. RGG type has an individual wire sealing grommet. To be mated only with receptacles having countersunk mounting holes. See pages 197.

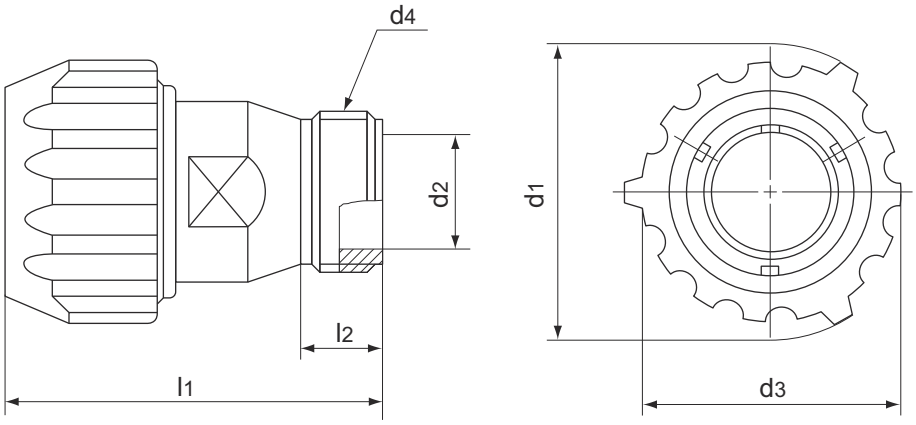

Shell Size	d_1 —	d_2 +0,1 -0	d_3 —	d_4 Thread in inches	l_1 max.	l_2 min.
10SL	33,5 1.32	10,4 0.41	28,5 1.12	5/8 -24 UNEF-2A	58 2.28	9,5 0.37
14S	40,2 1.58	13,2 0.52	35,2 1.38	3/4 -20 UNEF-2A	58 2.28	9,5 0.37
16	44 1.73	16,2 0.64	38,9 1.53	7/8 -20 UNEF-2A	72 2.83	9,5 0.37
18	49 1.93	19,8 0.78	43,5 1.71	1" -20 UNEF-2A	72 2.83	9,5 0.37
20	51,5 2.03	22 0.87	46 1.81	1"3/16 -18 UNEF-2A	73 2.87	9,5 0.37
22	56 2.20	24,5 0.96	50,5 1.99	1"3/16 -18 UNEF-2A	73 2.87	9,5 0.37
24	60 2.36	27,8 1.09	54 2.12	1"7/16 -18 UNEF-2A	81 3.19	9,5 0.37
28	67 2.64	31,2 1.23	61 2.40	1"7/16 -18 UNEF-2A	81 3.19	9,5 0.37
32	76 2.99	37,8 1.49	67,6 2.66	1"3/4 -18 UNS-2A	82 3.23	11 0.43
36	82,3 3.24	45 1.77	74,3 2.92	2" -18 UNS-2A	84 3.31	11,8 0.46
40	88 3.46	51,2 2.01	80 3.15	2"1/4 -16 UN-2A	94 3.70	11,8 0.46

Dimensions are mm. over inches

Straight plug with long backshell. RL tpe has an individual wire sealing grommet. AL and LA types have no wire sealing grommet.

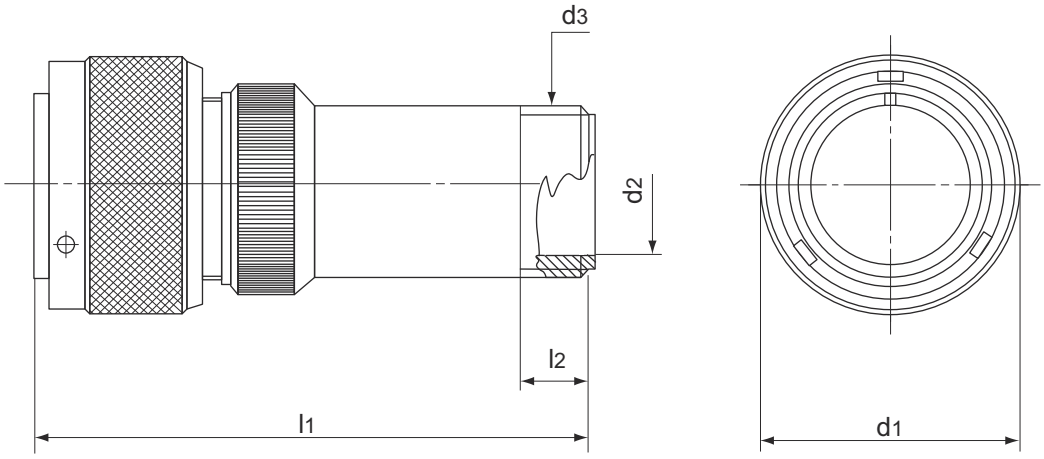

Shell Size	d_1 max.	d_2 +0,1 -0	d_3 Thread in inches	l_1 max.	l_2 min.
10SL	22,8 0.90	8,5 0.33	5/8 -24 UNEF-2A	71 2.79	9,5 0.37
14S	29,2 1.15	11,7 0.46	3/4 -20 UNEF-2A	71 2.79	9,5 0.37
16S	32 1.26	13,9 0.55	7/8 -20 UNEF-2A	71 2.79	9,5 0.37
16	32 1.26	13,9 0.55	7/8 -20 UNEF-2A	87 3.42	9,5 0.37
18	36,5 1.44	16,9 0.66	1” -20 UNEF-2A	87 3.42	9,5 0.37
20	39,9 1.57	20,9 0.82	1”3/16 -18 UNEF-2A	87 3.42	9,5 0.37
22	43,1 1.70	20,9 0.82	1”3/16 -18 UNEF-2A	87 3.42	9,5 0.37
24	46,6 1.83	25,9 1.02	1”7/16 -18 UNEF-2A	87 3.42	9,5 0.37
28	53,4 2.10	25,9 1.02	1”7/16 -18 UNEF-2A	95 3.74	9,5 0.37
32	60,1 2.37	32 1.26	1”3/4 -18 UNS-2A	95 3.74	11 0.43
36	66,3 2.61	36,9 1.45	2” -18 UNS-2A	95 3.74	11,8 0.46
40	72,5 2.85	44,9 1.77	2”1/4 -16 UN-2A	95 3.74	11,8 0.46

Dimensions are mm. over inches

Plug for terminating flexible rubber hose. Long metal backshell with rear lip suitable for flexible rubber conduit (hose) being secured to the backshell by a metal band or hose clamp.

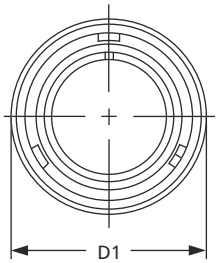

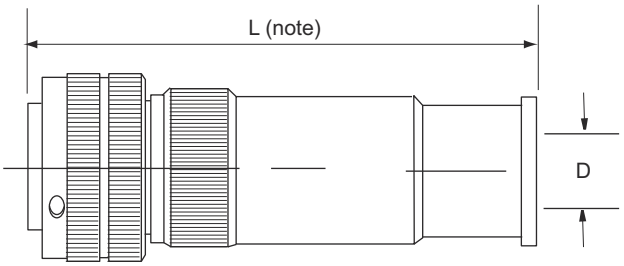

Note: Dimension "L" is dependent on conduit size used with each shell size. Please consult our Customer Service Department.

Shell Size	D_1 Maximum
10SL	22,8 0.90
14S	29,2 1.15
16S	33,0 1.30
16	33,0 1.30
18	36,5 1.44
20	39,9 1.57
22	43,1 1.70
24	46,6 1.84
28	53,4 2.10
32	60,1 2.37
36	66,3 2.61
40	72,4 2.85

Shell Size	Suffix in Connector Part Number	Conduit Inner Diameter	D Maximum
10SL	(045)	11,4 .45	7,5 .30
14	(049)	12,5 .49	7,5 .30
18		12,5 .49	7,5 .30
20		12,5 .49	7,5 .30
22	(053)	13,5 .53	10,4 .41
10SL	(075)	19,1 .75	15,9 .63
18		19,1 .75	15,9 .63
14S	(084)	21,3 .84	17,5 .69
20		21,3 .84	17,5 .69
10SL	(106)	26,9 1.06	22,2 .88
20		26,9 1.06	23,9 .94
32		26,9 1.06	23,9 .94
36		26,9 1.06	22,2 .88

Shell Size	Suffix in Connector Part Number	Conduit Inner Diameter	D Maximum
28	(110)	27,9 1.10	25,6 1.01
32		27,9 1.10	25,6 1.01
32	(122)	31,0 1.22	28,6 1.13
32	(138)	35,1 1.38	29,4 1.16
36		35,1 1.38	29,4 1.16
40		35,1 1.38	29,4 1.16
36	(157)	39,9 1.57	37,8 1.49
32	(197)	50,0 1.97	45,2 1.78
36		50,0 1.97	45,2 1.78
40		50,0 1.97	45,2 1.78

Note: Suffix in connector part number represents conduit inner diameter.

Dimensions are mm. over inches

Straight plug with cable clamp and seal for jacketed cables. CFZ type also has an individual wire sealing grommet.

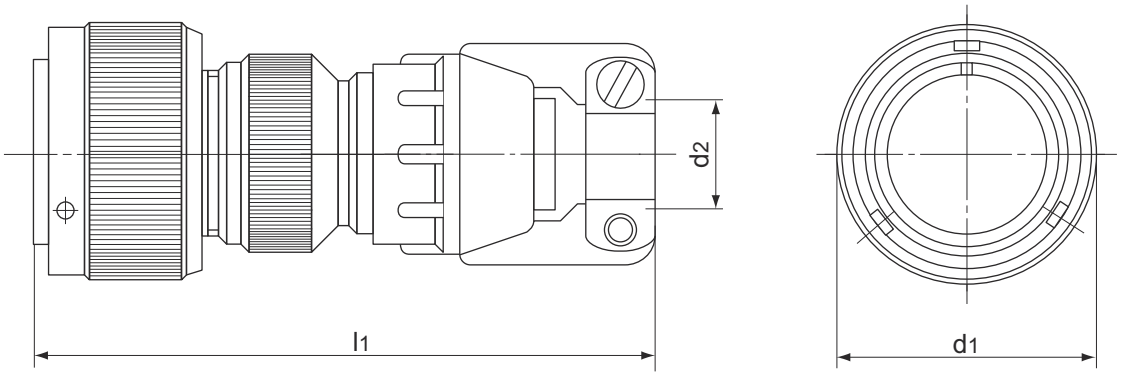

Shell Size	d_1 max.	d_2 Open	d_2 Closed	l_1 max.
10SL	22,8 0.90	7,93 .312	2,38 .094	73 2.87
14S	29,2 1.15	11,12 .438	6,35 .25	77 3.03
16S	32 1.26	13,48 .531	8,0 .315	77 3.03
16	32 1.26	13,48 .531	8,0 .315	88 3.46
18	36,5 1.44	15,87 .625	9,6 .378	91 3.58
20	39,9 1.57	19,0 .748	11,3 .445	91 3.58
22	43,1 1.70	19,0 .748	11,3 .445	92 3.62
24	46,6 1.83	23,8 .938	15,5 .610	97 3.82
28	53,4 2.10	23,8 .938	15,5 .610	103 4.05
32	60,1 2.37	31,75 1.250	23,4 .921	113 4.45
36	66,3 2.61	35,0 1.378	23,4 .921	120 4.72
40	72,5 2.85	41,25 1.625	29,9 1.177	135 5.31

Dimensions are mm. over inches

Straight plug with cable clamp for jacketed cable and rubber covered coupling nut for protection against dust and impact. CFZGG type also has an individual wire sealing grommet. To be mated only with receptacles having countersunk mounting holes. See pages 197.

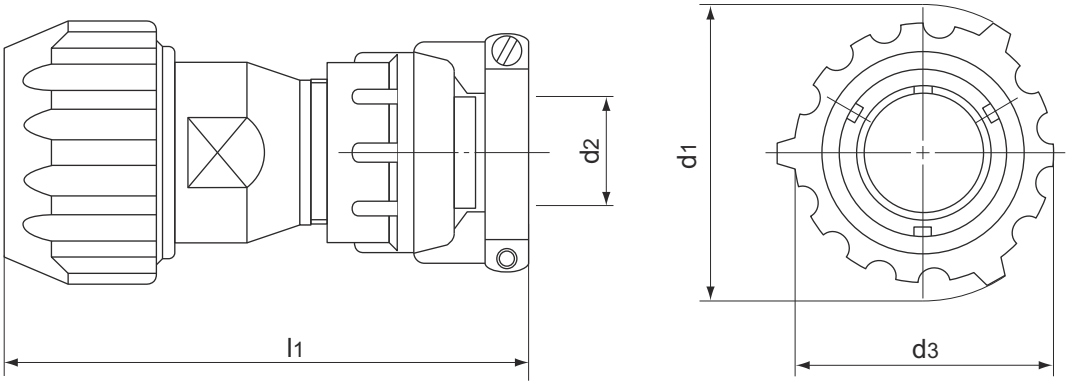

Shell Size	d_1 —	d_2 Open	d_2 Closed	d_3 —	l_1 max.
10SL	33,5 1.32	7,93 .312	2,38 .094	28,5 1.12	89 3.50
14S	40,2 1.58	11,1 .438	6.35 .25	32,5 1.28	89 3.50
16	44 1.73	13,48 .531	8,0 .315	38,9 1.53	103 4.05
18	49 1.93	15,87 .625	9,6 .378	43,5 1.71	106 4.17
20	51,5 2.03	19,0 .748	11,3 .445	46 1.81	107 4.21
22	56 2.20	19,0 .748	11,3 .445	50,5 1.99	107 4.21
24	60 2.36	23,8 .938	15,5 .610	54 2.12	118 4.64
28	67 2.64	23,8 .938	15,5 .610	61 2.40	118 4.64
32	76 2.99	31,75 1,250	23,4 .921	67,6 2.66	127 5.00
36	82,3 3.24	35,0 1.378	23,4 .921	74,3 2.92	134 5.27
40	88 3.46	41,25 1,625	29,9 1,177	80 3.15	144 5.67

Dimensions are mm. over inches

Plug for terminating conduit. Includes the backshell hardware suitable for flexible metal core *Electri-flex conduit*. Includes a wire sealing grommet and compression ring.

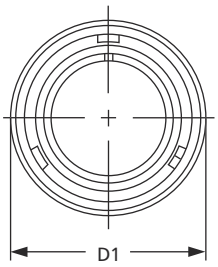

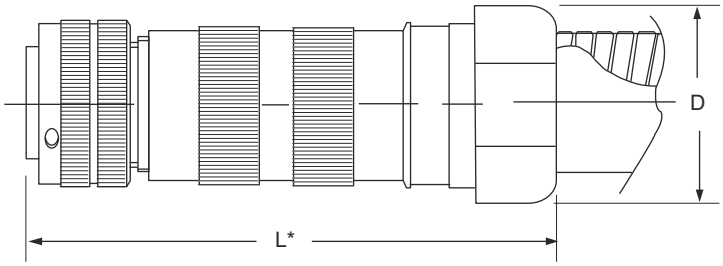

*Dimension "L" is dependent on conduit size used with each shell size. Please consult our Customer Service Department.

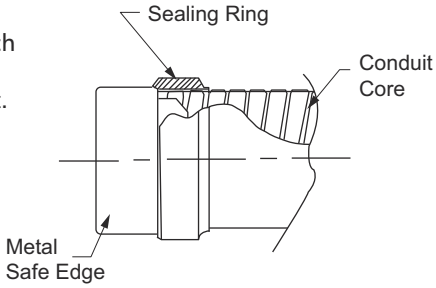

Shell Size	D_1 Maximum
10SL	22,8 0.90
14S	29,2 1.15
16S	33,0 1.30
16	33,0 1.30
18	36,5 1.44
20	39,9 1.57
22	43,1 1.70
24	46,6 1.84
28	53,4 2.10
32	60,1 2.37
36	66,3 2.61
40	72,4 2.85

Electri-Flex Conduit Trade Size	Shell Size	Suffix in Connector Part Number	L CIR06 Approximate	D Approximate
3/4	20	(075)	106,9 4.21	41,9 1.65
	24	(075)	137,9 5.43	41,9 1.65
	36	(075)	138,3 5.44	41,9 1.65
100	20	(100)	111,2 4.38	47,6 1.88

Note: For other sizes consult our Customer Service Department.

Dimensions are mm. over inches

Straight plug with an individual wire sealing grommet and cable clamp with bushing. AF type has no grommet.

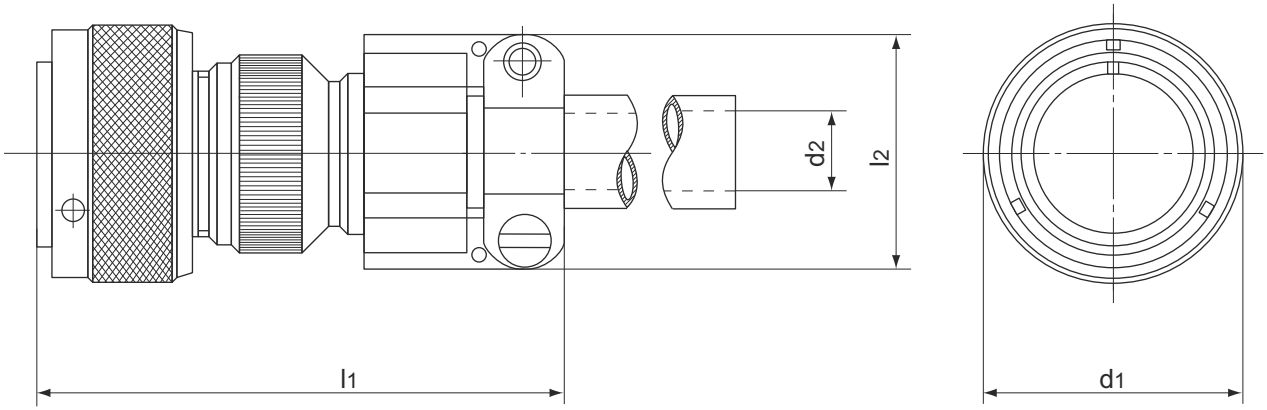

Shell Size	d_1 max.	d_2 * max.	l_1 max.	l_2 max.
10SL	22,8 0.90	5,6 0.22	64 2.52	22,7 0.89
14S	29,2 1.15	7,9 0.31	69 2.72	27,5 1.08
16S	32 1.26	11 0.43	71 2.79	30 1.18
16	32 1.26	11 0.43	82 3.23	30 1.18
18	36,5 1.44	14,2 0.56	82 3.23	32,2 1.27
20	39,9 1.57	15,8 0.62	82 3.23	37,5 1.48
22	43,1 1.70	15,8 0.62	83 3.27	37,5 1.48
24	46,6 1.83	19 0.75	87 3.42	43,3 1.70
28	53,4 2.10	19 0.75	93 3.66	43,3 1.70
32	60,1 2.37	23,8 0.94	99 3.90	51,7 2.03
36	66,3 2.61	31,7 1.25	100 3.94	58 2.28
40	72,5 2.85	34,9 1.37	128 5.04	68,5 2.70

* Max permissible outside diameter of cable
Dimensions are mm. over inches

Straight plug with an individual wire sealing grommet, cable clamp with bushing and rubber covered coupling nut for protection against dust and impact. AFGG type has no grommet. To be mated only with receptacles having countersunk mounting holes. See pages 197.

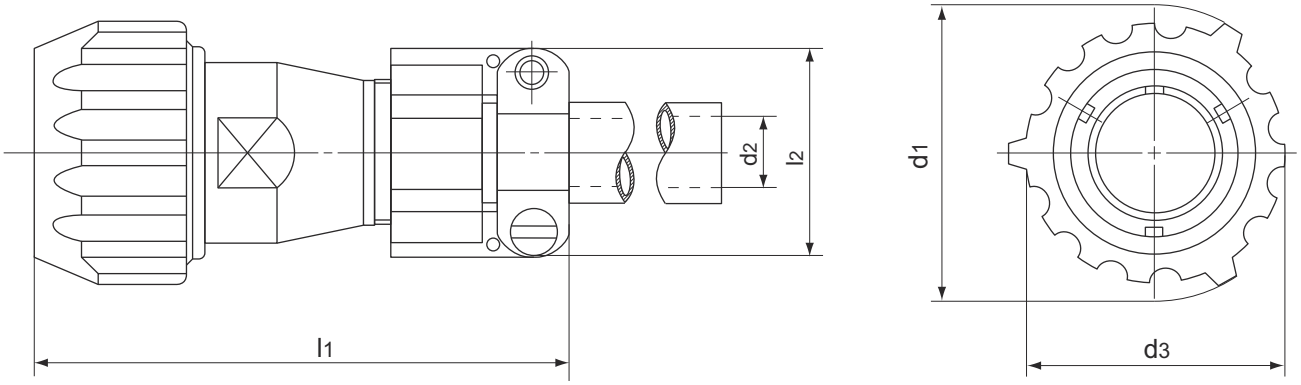

Shell Size	d_1 —	d_2 * max.	d_3 max.	l_1 max.	l_2 max.
10SL	33,5 1.32	5,6 0.22	28,5 1.12	77 3.03	22,7 0.89
14S	40,2 1.58	7,9 0.31	35,2 1.38	79 3.11	27,5 1.08
16	44 1.73	11 0.43	38,9 1.53	99 3.90	30 1.18
18	49 1.93	14,2 0.56	43,5 1.71	99 3.90	32,2 1.27
20	51,5 2.03	15,8 0.62	46 1.81	95 3.74	37,5 1.48
22	56 2.20	15,8 0.62	50,5 1.99	95 3.74	37,5 1.48
24	60 2.36	19 0.75	54 2.12	105 4.13	43,3 1.70
28	67 2.64	19 0.75	61 2.40	105 4.13	43,3 1.70
32	76 2.99	23,8 0.94	67,6 2.66	110 4.33	51,7 2.03
36	82,3 3.24	31,7 1.25	74,3 2.92	112 4.41	58 2.28
40	88 3.46	34,9 1.37	80 3.15	135 5.31	68,5 2.70

* Max permissible outside diameter of cable
Dimensions are mm. over inches

Straight plug with an individual wire sealing grommet and backshell for heat shrinkable tubing. AG type has no grommet.

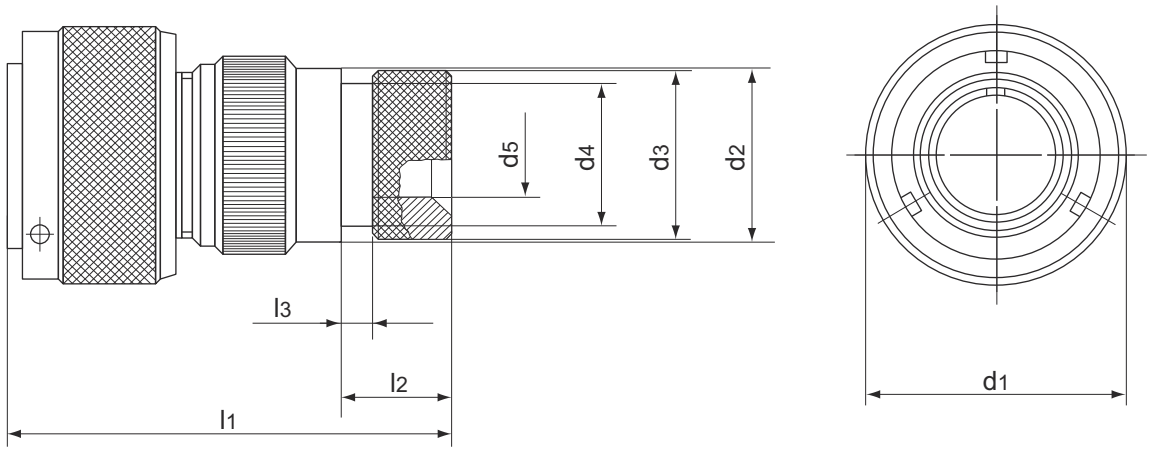

Shell Size	d_1 max.	d_2 ±0,2	d_3 ±0,2	d_4 max.	d_5 ±0,1	l_1 max.	l_2 ±0,1	l_3 ±0,1
10SL	22,8	17	15,5	13,3	7,9	48	11,7	3,5
	0.90	0.67	0.61	0.52	0.31	1.89	0.46	0.14
14S	29,2	20,1	19,1	17	10,8	48	11,7	3,5
	1.15	0.79	0.75	0.67	0.42	1.89	0.46	0.14
16S	32	23,5	23,9	21,9	13,7	48	11,7	3,5
	1.26	0.92	0.94	0.86	0.54	1.89	0.46	0.14
16	32	23,5	23,9	21,9	13,7	60	11,5	3,5
	1.26	0.92	0.94	0.86	0.54	2.36	0.45	0.14
18	36,5	26,5	23,9	21,9	14,8	60	11,5	3,5
	1.44	1.04	0.94	0.86	0.58	2.36	0.45	0.14
20	39,9	30,2	29,6	26,2	18,9	65	12,4	3,5
	1.57	1.19	1.16	1.03	0.74	2.56	0.49	0.14
22	43,1	33,6	29,6	26,2	21	65	12,4	3,5
	1.70	1.32	1.16	1.03	0.83	2.56	0.49	0.14
24	46,6	36,1	37,8	34,5	24,8	65	12,7	3,5
	1.83	1.42	1.49	1.36	0.98	2.56	0.50	0.14
28	53,4	41,4	37,8	34,5	27,2	65	12,7	3,5
	2.10	1.63	1.49	1.36	1.07	2.56	0.50	0.14
32	60,1	48,6	47,8	43,6	33,5	70	15,2	3,5
	2.37	1.91	1.88	1.72	1.32	2.75	0.60	0.14
36	66,3	54,8	47,8	43,6	38,7	75	15,2	3,5
	2.61	2.16	1.88	1.72	1.52	2.95	0.60	0.14
40	72,5	60,9	57,8	52,6	48,2	77	15,2	3,5
	2.85	2.40	2.27	2.07	1.90	3.03	0.60	0.14

Dimensions are mm. over inches

Straight plug with an individual wire sealing grommet and a two piece swivel backshell for heat shrinkable tubing. AG2 type has no wire sealing grommet.

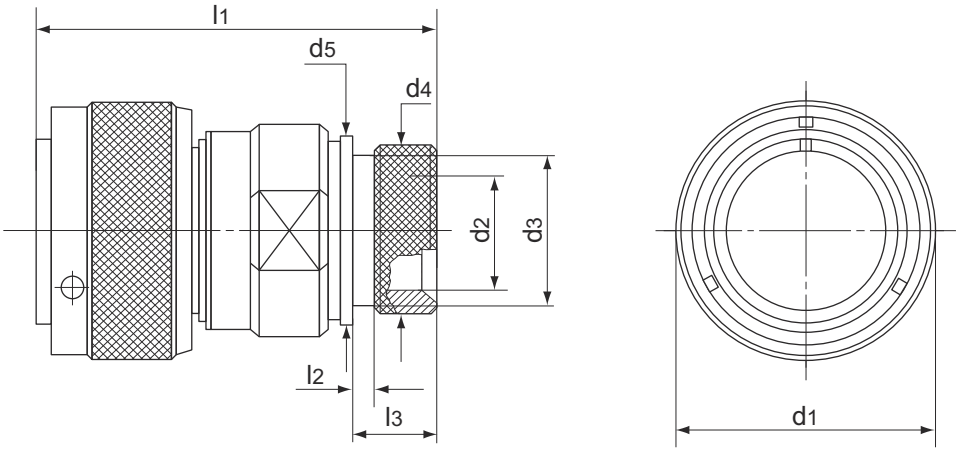

Shell Size	d_1 max.	d_2 ±0,1	d_3 ±0,1	d_4 —	d_5 ±0,1	l_1 * ~	l_2 ±0,1	l_3 ±0,1
10SL	22,8	8,6	13	15,5	17	49	3,5	11,7
	0.90	0.34	0.51	0.61	0.67	1.93	0.14	0.46
14S	29,2	11,2	16,8	19,1	20,1	49	3,5	11,7
	1.15	0.44	0.66	0.75	0.79	1.93	0.14	0.46
16S	32	14	21,7	23,9	23,5	49,8	3,5	11,7
	1.26	0.55	0.85	0.94	0.92	1.96	0.14	0.46
16	32	14	21,7	23,9	23,5	59,3	3,5	11,5
	1.26	0.55	0.85	0.94	0.92	2.33	0.14	0.45
18	36,5	16,4	21,7	23,9	26,5	58,8	3,5	11,5
	1.44	0.64	0.85	0.94	1.04	2.31	0.14	0.45
20	39,9	19,3	26,1	29,6	30,2	59,5	3,5	12,4
	1.57	0.76	1.03	1.16	1.19	2.34	0.14	0.49
22	43,1	22	26,1	29,6	33,6	59,5	3,5	12,4
	1.70	0.86	1.03	1.16	1.32	2.34	0.14	0.49
24	46,6	25	34,3	37,8	36,1	62,1	3,5	12,7
	1.83	0.98	1.35	1.49	1.42	2.44	0.14	0.50
28	53,4	28	34,3	37,8	41,4	63,9	3,5	12,7
	2.10	1.10	1.35	1.49	1.63	2.51	0.14	0.50
32	60,1	34,8	43,4	47,8	48,6	66,2	3,5	15,2
	2.37	1.37	1.71	1.88	1.91	2.61	0.14	0.60
36	66,3	38,7	43,4	47,8	54,8	66,2	3,5	15,2
	2.61	1.52	1.71	1.88	2.16	2.61	0.14	0.60
40	72,5	48,2	52,6	57,8	61	66,5	3,5	15,5
	2.85	1.90	2.07	2.27	2.40	2.62	0.14	0.61

* Nominal values after coupling the backshell
Dimensions are mm. over inches

Straight plug with an individual wire sealing grommet and a two piece swivel backshell for heat shrinkable tubing plus a rubber covered coupling nut for protection against dust and impact. To be mated only with receptacles having countersunk mounting holes. See pages 197.

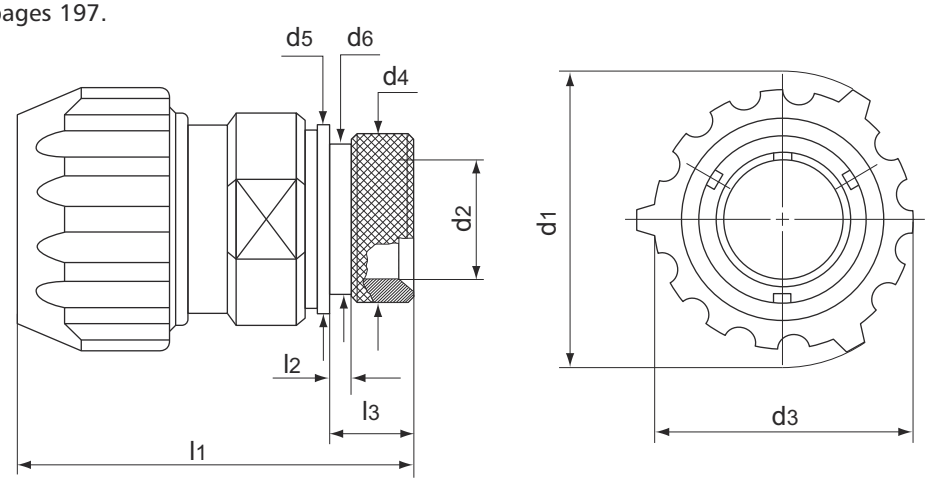

Shell Size	d_1 —	d_2 ±0,1	d_3 —	d_4 —	d_5 ±0,1	d_6 ±0,1	l_1 * —	l_2 ±0,1	l_3 ±0,1
10SL	33,5	8,6	28,5	15,5	17	13	50	3,5	11,7
	1.32	0.34	1.12	0.61	0.67	0.51	1.97	0.14	0.46
14S	40,2	11,2	35,2	19,1	20,1	16,8	50	3,5	11,7
	1.58	0.44	1.38	0.75	0.79	0.66	1.97	0.14	0.46
16	44	14	38,9	23,9	23,5	21,7	59,5	3,5	11,5
	1.73	0.55	1.53	0.94	0.92	0.85	2.34	0.14	0.45
18	49	16,4	43,5	23,9	26,5	21,7	59	3,5	11,5
	1.93	0.64	1.71	0.94	1.04	0.85	2.32	0.14	0.45
20	51,5	19,3	46	29,6	30,2	26,1	60,5	3,5	12,4
	2.03	0.76	1.81	1.16	1.19	1.03	2.38	0.14	0.49
22	56	22	50,5	29,6	33,6	26,1	60,5	3,5	12,4
	2.20	0.86	1.99	1.16	1.32	1.03	2.38	0.14	0.49
24	60	25	54	37,8	36,1	34,3	64,5	3,5	12,7
	2.36	0.98	2.12	1.49	1.42	1.35	2.54	0.14	0.50
28	67	28	61	37,8	41,4	34,3	66	3,5	12,7
	2.64	1.10	2.40	1.49	1.63	1.35	2.60	0.14	0.50
32	76	34,8	67,6	47,8	48,6	43,4	70	3,5	15,2
	2.99	1.37	2.66	1.88	1.91	1.71	2.75	0.14	0.60
36	82,3	38,7	74,3	47,8	54,8	43,4	70	3,5	15,2
	3.24	1.52	2.92	1.88	2.16	1.71	2.75	0.14	0.60
40	88	48,2	80	57,8	61	52,6	70	3,5	15,5
	3.46	1.90	3.15	2.27	2.40	2.07	2.75	0.14	0.61

* Nominal dimension with tightened backshell
Dimensions are mm. over inches

Plug for terminating jacketed cable. Long LC backshell with internal adapter suitable for various sizes of cable, grommet, compression ring and a cord grip included. LCG same as LC but without the wire sealing grommet and compression ring.

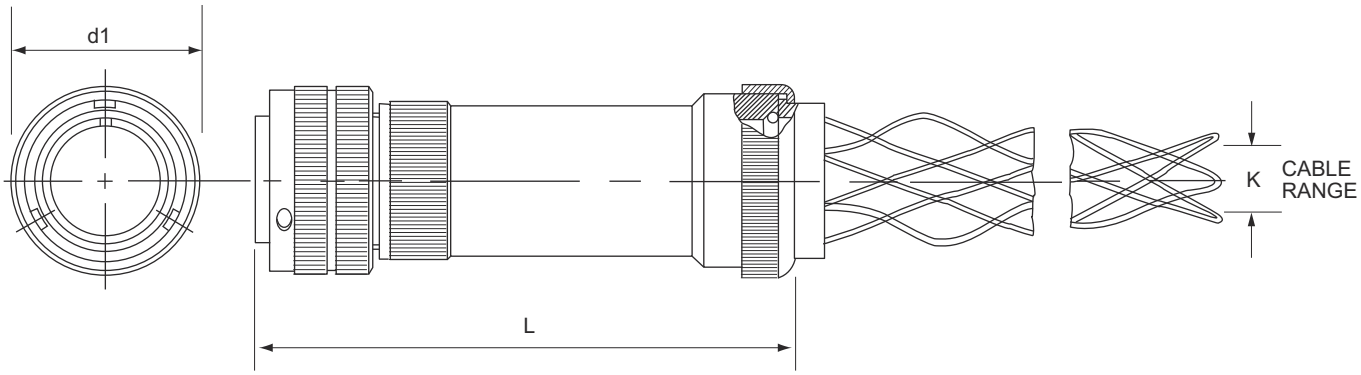

Shell Size	D_1 Max.	L Approximate
10SL	22,8 0.90	100 3.94
14S	29,2 1.15	100 3.94
16S	33,0 1.30	100 3.94
16	33,0 1.30	110 4.33
18	36,5 1.44	110 4.33
20	39,9 1.57	116 4.57
22	43,1 1.70	116 4.57
24	46,6 1.84	120 4.72
28	53,4 2.10	129 5.08
32	60,1 2.37	145 5.71
36	66,3 2.61	145 5.71
40	72,4 2.85	145 5.71

K Suffix in Connector Part Number	K Cable Range Min.	K Cable Range Max.
K0	6,35 .250	9,53 .375
K1	9,53 .375	12,7 .500
K2	12,7 .500	15,87 .625
K3	15,87 .625	19,05 .750
K4	19,05 .750	22,23 .875
K5	22,23 .875	25,4 1.000
K6	25,4 1.000	28,45 1.120
K7	28,45 1.120	31,75 1.250
K8	32,77 1.290	38,1 1.500
K9	39.62 1.560	41,28 1.625
K10	41.28 1.625	44,45 1.750

Dimensions are mm. over inches

Plug for terminating jacketed cable. Rubber covered coupling nut and long LC backshell with internal adapter suitable for various sizes of cable, grommet, compression ring and a cord grip included. LCGGG same as LCGG but without the wire sealing grommet and compression ring.

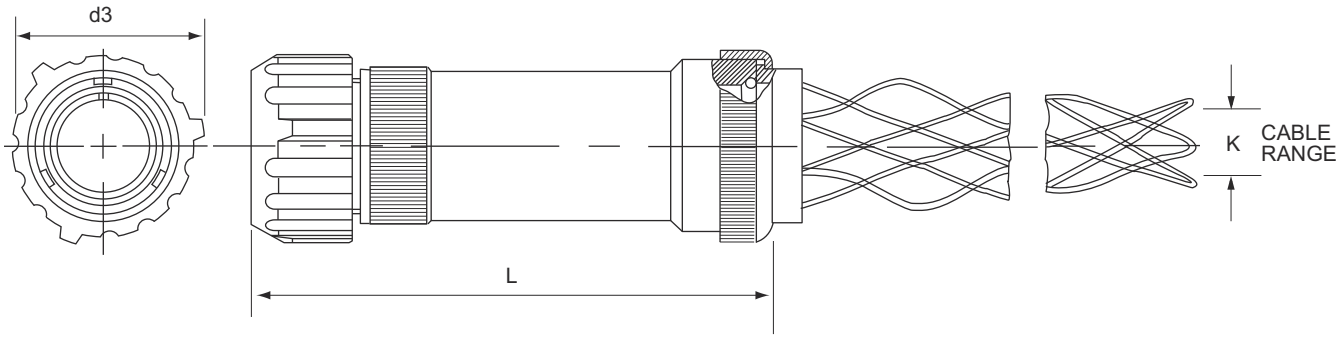

Shell Size	D_3 —	L Approximate
10SL	28,5 1.12	100 3.94
14S	32,5 1.28	100 3.94
16S	N/A	100 3.94
16	38,9 1.53	110 4.33
18	43,5 1.71	110 4.33
20	46,0 1.81	116 4.57
22	50,5 1.99	116 4.57
24	54,0 2.13	120 4.72
28	61,0 2.4	129 5.08
32	67,6 2.66	145 5.71
36	74,3 2.93	145 5.71
40	80,0 3.15	145 5.71

K Suffix in Connector Part Number	K Cable Range Min.	Max.
K0	6,35 .250	9,53 .375
K1	9,53 .375	12,7 .500
K2	12,7 .500	15,87 .625
K3	15,87 .625	19,05 .750
K4	19,05 .750	22,23 .875
K5	22,23 .875	25,4 1.000
K6	25,4 1.000	28,45 1.120
K7	28,45 1.120	31,75 1.250
K8	32,77 1.290	38,1 1.500
K9	39.62 1.560	41,28 1.625
K10	41.28 1.625	44,45 1.750

Dimensions are mm. over inches

Straight plug with long backshell, cable clamp and seal for jacketed cables. LCFZ - type also has an individual wire sealing grommet.

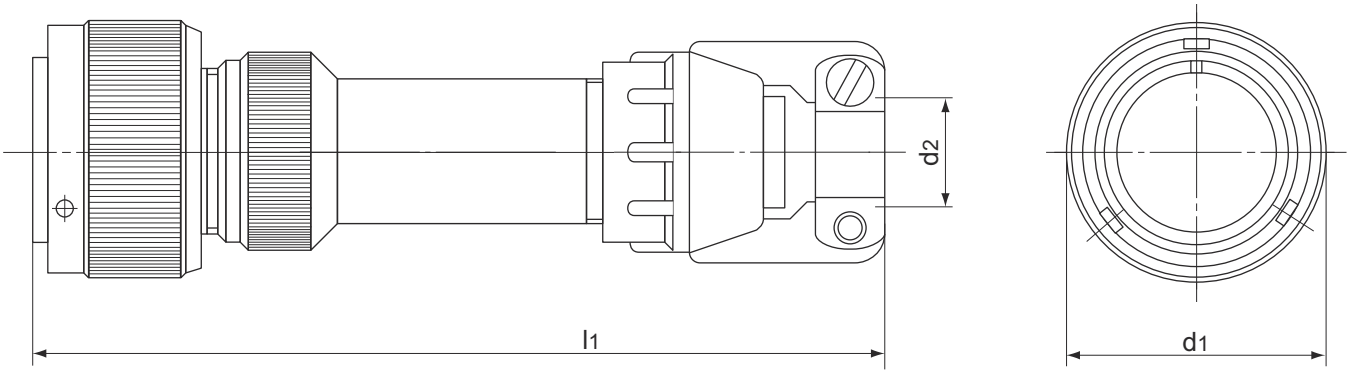

Shell Size	d_1 max.	d_2 Open	d_2 Closed	l_1 max.
10SL	22,8 0.90	7,93 .312	2,38 .094	101 3.98
14S	29,2 1.15	11,12 .438	6,35 .25	101 3.98
16S	32 1.26	13,48 .531	8,0 .315	101 3.98
16	32 1.26	13,48 .531	8,0 .315	114 4.49
18	36,5 1.44	15,87 .625	9,6 .378	119 4.68
20	39,9 1.57	19,0 .748	11,3 .445	119 4.68
22	43,1 1.70	19,0 .748	11,3 .445	119 4.68
24	46,6 1.83	23,8 .938	15,5 .610	124 4.88
28	53,4 2.10	23,8 .938	15,5 .610	130 5.12
32	60,1 2.37	31,75 1.259	23,4 .921	137 5.39
36	66,3 2.61	35,0 1.378	23,4 .921	144 5.67
40	72,5 2.85	41,25 1.625	29,9 1.177	144 5.67

Dimensions are mm. over inches

Straight plug with long backshell, cable clamp and seal for jacketed cable plus a rubber covered coupling nut for protection against dust and impact. LCFZGG - type also has an individual wire sealing grommet. To be mated only with receptacles having countersunk mounting holes. See pages 197.

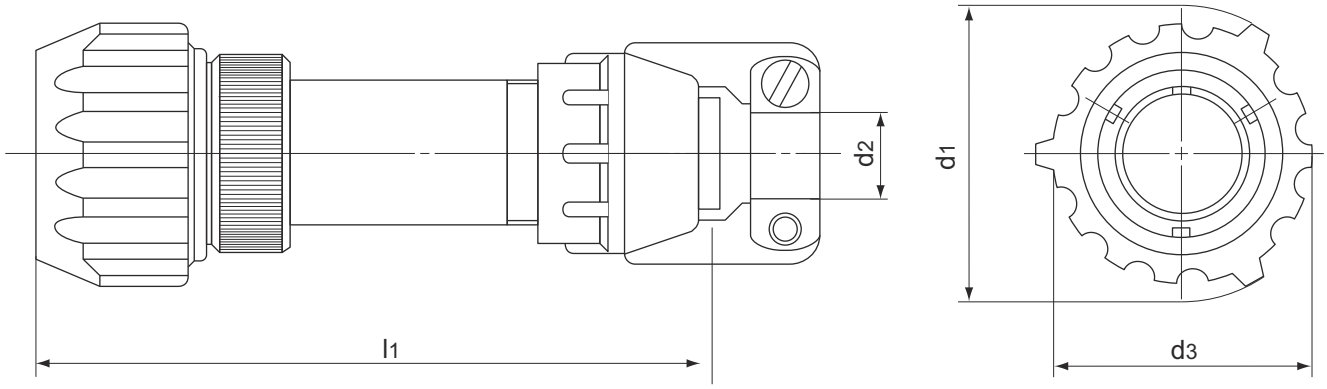

Shell Size	d_1 —	d_2 Open	d_2 Closed	d_3 —	l_1 max.
10SL	33,5 1.32	7,93 .312	2,38 .094	28,5 1.12	102 4.01
14S	40,2 1.58	11,12 .438	6,35 .25	32,5 1.28	102 4.01
16	44 1.73	13,48 .531	8,0 3.15	38,9 1.53	115 4.53
18	49 1.93	15,87 .625	9,6 .378	43,5 1.71	120 4.72
20	51,5 2.03	19,0 .748	11,3 .445	46 1.81	121 4.76
22	56 2.20	19,0 .748	11,3 .445	50,5 1.99	121 4.76
24	60 2.36	23,8 .938	15,5 .610	54 2.12	126 4.96
28	67 2.64	23,8 .938	15,5 .610	61 2.40	132 5.20
32	76 2.99	31,75 1.250	23,4 .921	67,6 2.66	140 5.51
36	82,3 3.24	35,0 1.378	23,4 .921	74,3 2.92	147 5.79
40	88 3.46	41,25 1.625	29,9 1.177	80 3.15	147 5.79

Dimensions are mm. over inches

Straight plug with an individual wire sealing grommet, a long backshell, cable clamp and bushing. LAF type has no grommet.

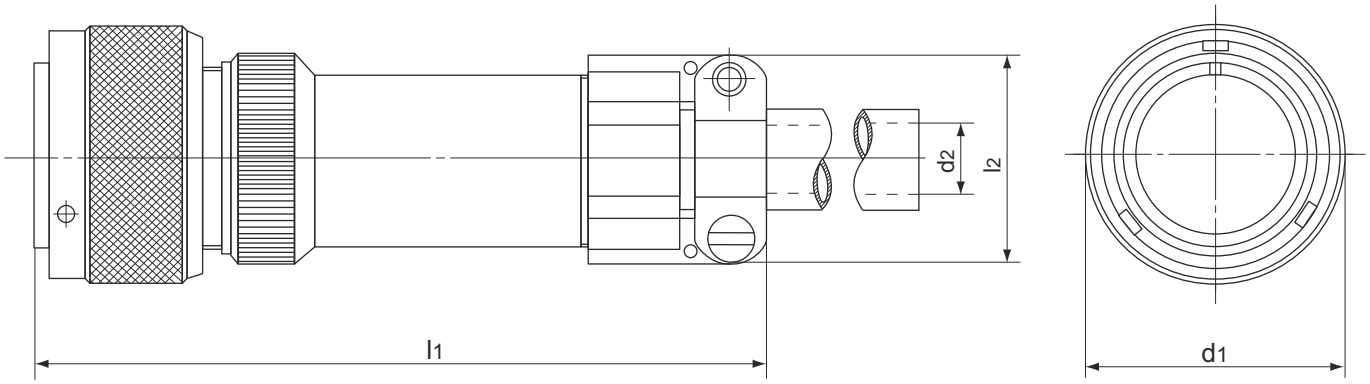

Shell Size	d_1 max.	d_2 * max.	l_1 max.	l_2 max.
10SL	22,8 0.90	5,6 0.22	92 3.62	22,7 0.89
14S	29,2 1.15	7,9 0.31	93 3.66	27,5 1.08
16S	32 1.26	11 0.43	95 3.74	30 1.18
16	32 1.26	11 0.43	111 4.37	30 1.18
18	36,5 1.44	14,2 0.56	111 4.37	32,2 1.27
20	39,9 1.57	15,8 0.62	111 4.37	37,5 1.48
22	43,1 1.70	15,8 0.62	111 4.37	37,5 1.48
24	46,6 1.83	19 0.75	113 4.45	43,3 1.70
28	53,4 2.10	19 0.75	121 4.76	43,3 1.70
32	60,1 2.37	23,8 0.94	123 4.84	51,7 2.03
36	66,3 2.61	31,7 1.25	125 4.92	58 2.28
40	72,5 2.85	34,9 1.37	138 5.43	68,5 2.70

* Max permissible outside diameter of cable
Dimensions are mm. over inches

Straight plug with an individual wire sealing grommet, long backshell, cable clamp with bushing plus a rubber covered coupling nut for protection against dust and impact. LAFGG type has no grommet. To be mated only with receptacles having countersunk mounting holes. See pages 197.

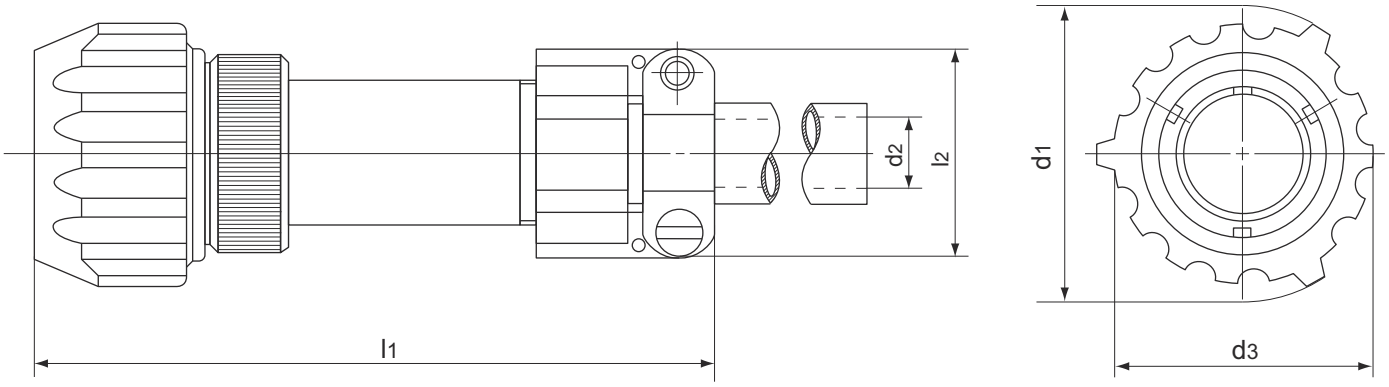

Shell Size	d_1 —	d_2 * max.	d_3 —	l_1 max.	l_2 max.
10SL	33,5 1.32	5,6 0.22	28,5 1.12	93 3.66	22,7 0.89
14S	40,2 1.58	7,9 0.31	35,2 1.38	94 3.70	27,5 1.08
16	44 1.73	11 0.43	38,9 1.53	112 4.41	30 1.18
18	49 1.93	14,2 0.56	43,5 1.71	112 4.41	32,2 1.27
20	51,5 2.03	15,8 0.62	46 1.81	112 4.41	37,5 1.48
22	56 2.20	15,8 0.62	50,5 1.99	112 4.41	37,5 1.48
24	60 2.36	19 0.75	54 2.12	115,5 4.55	43,3 1.70
28	67 2.64	19 0.75	61 2.40	123,5 4.86	43,3 1.70
32	76 2.99	23,8 0.94	67,6 2.66	127 5.00	51,7 2.03
36	82,3 3.24	31,7 1.25	74,3 2.92	129 5.08	58 2.28
40	88 3.46	34,9 1.37	80 3.15	142 5.59	68,5 2.70

* Max permissible outside diameter of cable
Dimensions are mm. over inches

Plug for terminating flexible rubber hose. Similar to the BC class but with an extended rear for the mechanical strain relief of the individual wires within the conduit. Flexible rubber conduit (hose) is being secured to the backshell by a metal band or hose clamp.

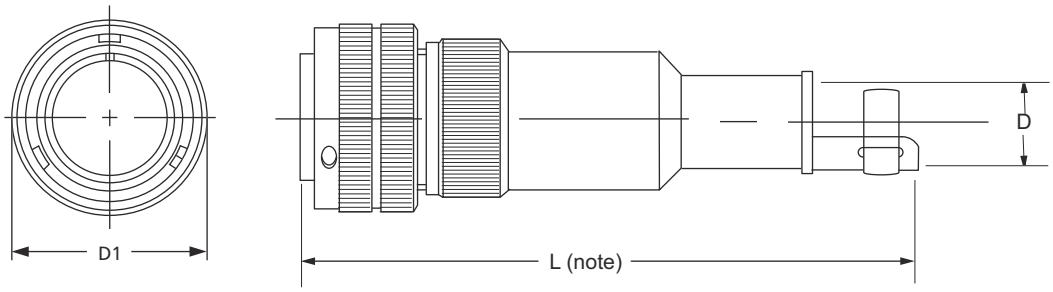

Note: Dimension "L" is dependent on conduit size used with each shell size. Please consult our Customer Service Department.

Shell Size	D_1 Maximum
10SL	22,8 0.90
14S	29,2 1.15
16S	33,0 1.30
16	33,0 1.30
18	36,5 1.44
20	39,9 1.57
22	43,1 1.70
24	46,6 1.84
28	53,4 2.10
32	60,1 2.37
36	66,3 2.61
40	72,4 2.85

Shell Size	Suffix in Connector Part Number	Conduit Inner Diameter	D Maximum
18	(045)	11,43 .45	7,8 .30
22		11,43 .45	7,8 .30
20	(075)	19,05 .75	13,9 .55
22		19,05 .75	13,9 .55
18	(084)	21,34 .84	15,2 .60
18	(106)	26,92 1.06	21,4 .84
20		26,92 1.06	21,4 .84
22		26,92 1.06	21,4 .84
24		26,92 1.06	21,4 .84
28		26,92 1.06	21,4 .84
36		26,92 1.06	21,4 .84
24	(125)	31,75 1.25	27,8 1.09

Shell Size	Suffix in Connector Part Number	Conduit Inner Diameter	D Maximum
18	(141)	35,81 1.41	28,6 1.12
22		35,81 1.41	28,6 1.12
24		35,81 1.41	28,6 1.12
40	(150)	38,10 1.50	32,5 1.28
36	(197)	50,04 1.97	42,0 1.65
40		50,04 1.97	42,0 1.65
40	(203)	51,56 2.03	44,5 1.75
40	(224)	56,90 2.24	49,7 1.96

Note: Suffix in connector part number represents conduit inner diameter.

Dimensions are mm. over inches

Plug for terminating conduit. Straight, long NM backshell with adapter and backnut assembly to seal and grip on the jacket of a non-metalic flexible *CN-P type Anaconda sealtite conduit*. A wire sealing grommet and compression ring is included. NMG same as NM but without a grommet or compression ring.

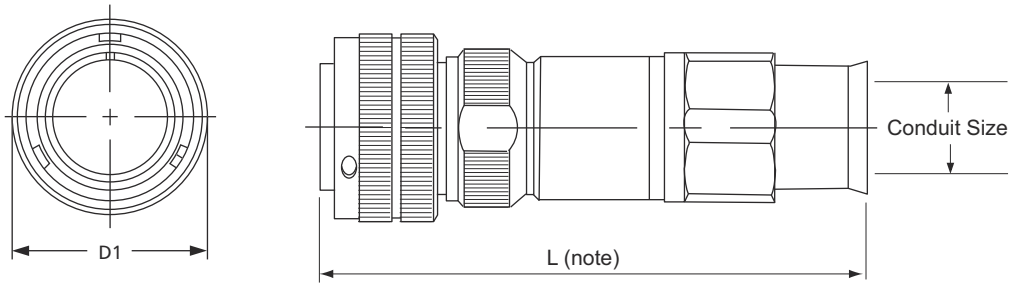

Shell Size	D_1 Maximum
10SL	22,8 0.90
14S	29,2 1.15
16S	33,0 1.30
16	33,0 1.30
18	36,5 1.44
20	39,9 1.57
22	43,1 1.70
24	46,6 1.84
28	53,4 2.10
32	60,1 2.37
36	66,3 2.61
40	72,4 2.85

Conduit (CN-P Type) Trade Size	Suffix in Connector Part Number
3/8	(038)
1/2	(050)
3/4	(075)
1	(100)
1 1/4	(125)
1 1/2	(150)
2	(200)

Note: Dimension "L" is dependent on conduit size used with each shell size. Please consult our Customer Service Department.

Dimensions are mm. over inches

Plug for terminating PMA conduit. Includes a backshell and designated PMA fitting for use with appropriate types of PMA conduit.

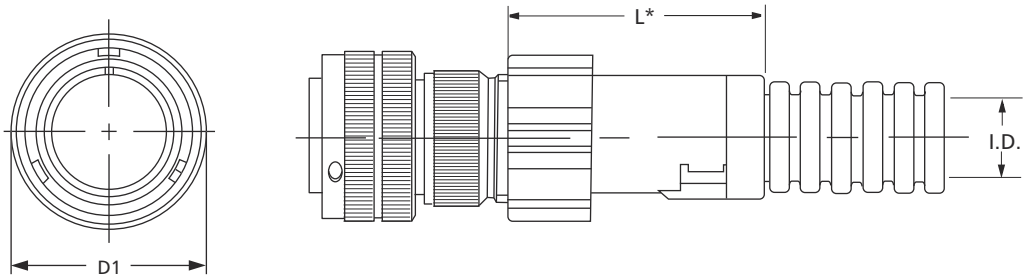

Shell Size	D_1 Maximum
10SL	22,8 0.90
14S	29,2 1.15
16S	33,0 1.30
16	33,0 1.30
18	36,5 1.44
20	39,9 1.57
22	43,1 1.70
24	46,6 1.84
28	53,4 2.10
32	60,1 2.37
36	66,3 2.61
40	72,4 2.85

Class	Shell Size	PMA Fitting	Part Number Suffix	PMA Conduit Inner Diameter	L Approximate
PIRAG	10SL	BVIRA-U152	(U152)	11,9 .47	36,5 1.44
	14S	BVIRA-U182	(U182)	11,9 .47	36,5 1.44
	14S	BVIRA-U187	(U187)	15,2 .60	44,5 1.75
PIRB	20 & 22	BVIRB-U297	(U297)	15,2 .60	38,0 1.5
	20 & 22	BVIRB-U293	(U293)	22,0 .87	38,0 1.5
PIVG	16S &16	BVIVG-U217	(U217)	15,2 .60	33,0 1.30
	18	BVIVG-U247	(U247)	15,2 .60	35,0 1.38
	18	BVIVG-U242	(U242)	11,9 .47	35,0 1.38
	20 & 22	BVIVG-U297	(U297)	15,2 .60	35,0 1.38
	20 & 22	BVIVG-U293	(U293)	22,0 .87	55,0 2.16
	24 & 28	BVIVG-U353	(U353)	22,0 .87	52,0 2.05
	24 & 28	BVIVG-U356	(U356)	36,5 1.44	63,0 2.48
	24 & 28	BVIVG-U357	(U357)	15,2 .60	46,5 1.83
	32	BVIVG-U436	(U436)	35,8 1.41	62,5 2.46
	32	BVIVG-U439	(U439)	27,7 1.09	51,5 2.03
	32	BVIVG-U433	(U433)	22,0 .87	52,0 2.05
	36	BVIVG-U509	(U509)	27,7 1.09	55,0 2.16
	36	BVIVG-U503	(U503)	22,0 .87	51,5 2.03
	40	BVIVG-U563	(U563)	22,0 .87	51,0 2.00
	40	BVIVG-U566	(U566)	35,8 1.41	62,0 2.44
	40	BVIVG-U568	(U568)	46,7 1.84	64,0 2.52
	40	BVIVG-U569	(U569)	27,7 1.09	51,0 2.00
PILJ	40	BFILJ-U568G	(U568G)	46,8 1.84	65,0 2.56

*Dimension "L" is dependent on conduit size used with each shell size. Consult our Customer Service Department.

Dimensions are mm. over inches

Specifications and dimensions subject to change
Dimensions shown in mm.

Straight plug with an individual wire sealing grommet and a special backshell for wires protection.

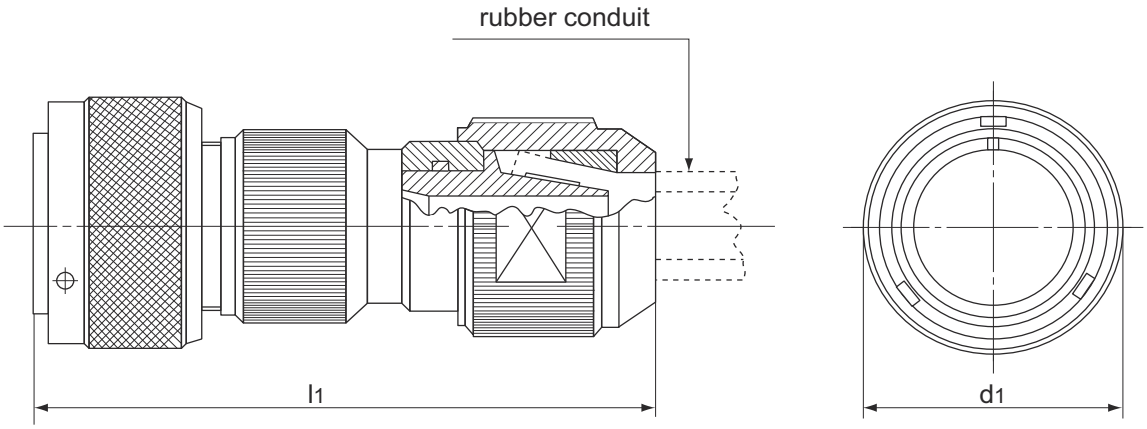

Shell Size	d_1 max.	l_1 max.	Rubber conduit
16	32 1.26	99 3.90	14 x 09
18	36,5 1.44	101 3.98	16 x 11 17 x 12 18 x 13 20 x 15
20	39,9 1.57	101 3.98	18 x 13 20 x 15
22	43,1 1.70	101 3.98	30 x 22
24	46,6 1.83	107 4.21	20 x 15 23 x 18
28	53,4 2.10	110 4.33	29 x 24 30 x 22
32	60,1 2.37	114 4.49	27 x 22 33 x 28
36	66,3 2.61	120 4.72	33 x 28 36 x 28 38 x 33
40	72,5 2.85	121 4.76	33 x 28 38 x 33 48 x 40

Plug for terminating conduit. Straight, long RK backshell with adapter and backnut assembly to seal and grip on the jacket of a steel core flexible *EF type Anaconda sealtite conduit*. A wire sealing grommet and compression ring is included. ARK same as RK but without a grommet or compression ring.

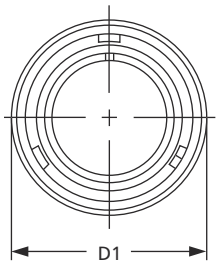

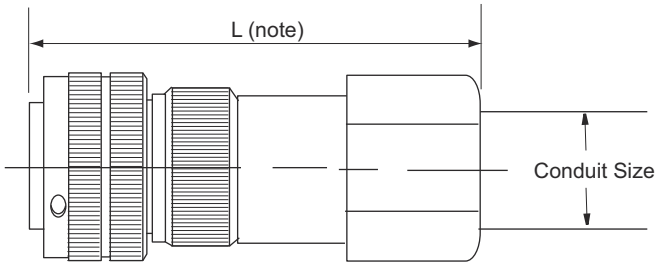

Shell Size	D_1 Maximum
10SL	22,8 0.90
14S	29,2 1.15
16S	33,0 1.30
16	33,0 1.30
18	36,5 1.44
20	39,9 1.57
22	43,1 1.70
24	46,6 1.84
28	53,4 2.10
32	60,1 2.37
36	66,3 2.61
40	72,4 2.85

Conduit (EF Type) Trade Size	Suffix in Connector Part Number
3/8	(038)
1/2	(050)
3/4	(075)
1	(100)
1 1/4	(125)
1 1/2	(150)
2	(200)

Note: Dimension "L" is dependent on conduit size used with each shell size. Please consult our Customer Service Department.

Dimensions are mm. over inches

Straight plug with an individual wire sealing grommet. ARV type has no wire sealing grommet.

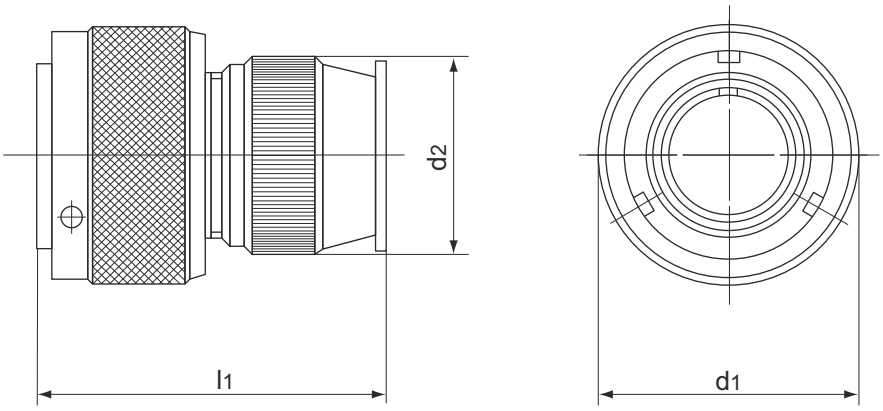

Shell Size	d_1 max.	d_2 max.	l_1 max.
10SL	22,8 0.90	20 0.79	40 1.57
14S	29,2 1.15	24 0.94	40 1.57
16S	32 1.26	26 1.02	40 1.57
16	32 1.26	26 1.02	56 2.20
18	36,5 1.44	29,5 1.16	56 2.20
20	39,9 1.57	33 1.30	57 2.24
22	43,1 1.70	36 1.42	57 2.24
24	46,6 1.83	40 1.57	59 2.32
28	53,4 2.10	46 1.81	59 2.32
32	60,1 2.37	51,5 2.03	60 2.36
36	66,3 2.61	58 2.28	60 2.36
40	72,5 2.85	64,5 2.54	61 2.40

Dimensions are mm. over inches

Straight plug with an individual wire sealing grommet and a rubber covered coupling nut for protection against dust and impact. To be mated only with receptacles having countersunk mounting holes. See pages 197.

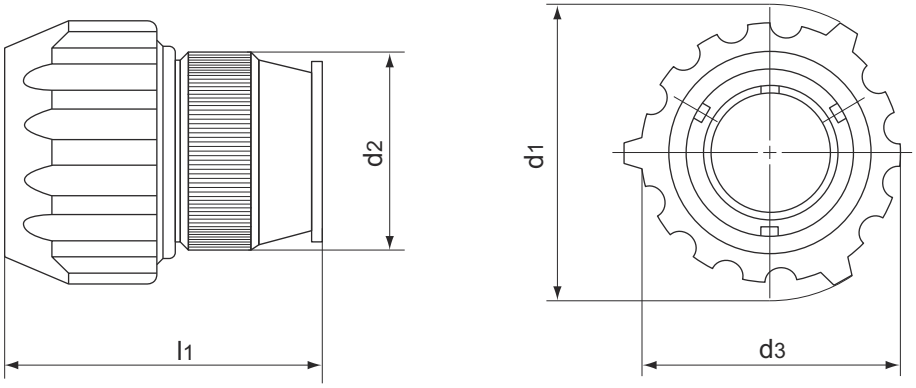

Shell Size	d_1 —	d_2 max.	d_3 —	l_1 max.
10SL	33,5 1.32	20,5 0.81	28,5 1.12	40 1.57
14S	40,2 1.58	26 1.02	35,2 1.38	40 1.57
16	44 1.73	30 1.18	38,9 1.53	56 2.20
18	49 1.93	33 1.30	43,5 1.71	56 2.20
20	51,5 2.03	36 1.42	46 1.81	58 2.28
22	56 2.20	39 1.53	50,5 1.99	58 2.28
24	60 2.36	41 1.61	54 2.12	61 2.40
28	67 2.64	49 1.93	61 2.40	61 2.40
32	76 2.99	55 2.16	67,6 2.66	64 2.52
36	82,3 3.24	61 2.40	74,3 2.92	64 2.52
40	88 3.46	68 2.68	80 3.15	65 2.56

Dimensions are mm. over inches

Straight plug with an individual wire sealing grommet, RFI shield spring and a special backshell for shield braid and heat shrinkable tubing termination. CIR06SB - type as no RFI shield spring. (for shielding characteristics, see page 12).

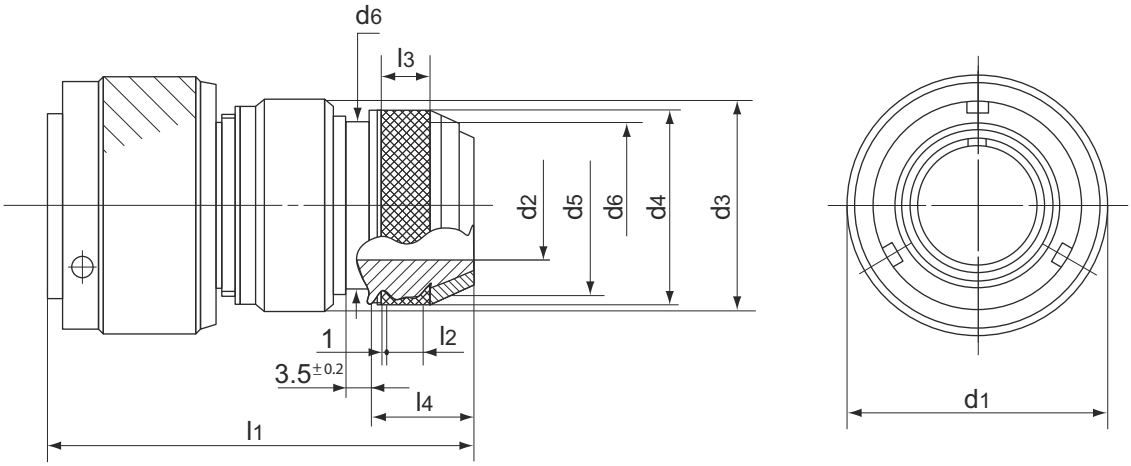

Shell Size	d_1 max.	d_2 min.	d_3 max.	d_4 + 0,5 - 0	d_5 Thread	d_6 max.	l_1 * ~	l_2 min.	l_3 + 0,5	l_4 + 0,1
10SL	22,8	8,6	22	18,5	M16x1	16,3	51,4	4,5	5,5	17
	0.90	0.34	0.87	0.73		0.64	2.02	0.18	0.22	0.67
14S	29,2	10,6	25	22	M20x1	20	51,4	5	7	17
	1.15	0.42	0.98	0.87		0.79	2.02	0.20	0.27	0.67
16S	32	13,5	28	25	M23x1	23	53,4	6	8	18,5
	1.26	0.53	1.10	0.98		0.90	2.10	0.24	0.31	0.73
16	32	13,5	28	25	M23x1	23	62,5	6	8	18,5
	1.26	0.53	1.10	0.98		0.90	2.46	0.24	0.31	0.73
18	36,5	14,6	31	28	M26x1	24,5	63,7	6	8	18,5
	1.44	0.57	1.22	1.10		0.96	2.50	0.24	0.31	0.73
20	39,9	18,5	35	32	M30x1	28,5	63,7	6	10	18,5
	1.57	0.73	1.38	1.26		1.12	2.50	0.24	0.39	0.73
22	43,1	20,8	38	34	M32x1	30,5	63,7	6	10	18,5
	1.70	0.82	1.50	1.34		1.20	2.50	0.24	0.39	0.73
24	46,6	24,6	41	38	M36x1	34,5	64,4	6	10	18,5
	1.83	0.97	1.61	1.50		1.36	2.53	0.24	0.39	0.73
28	53,4	27	48	41	M39x1	37,5	64,4	6	10	18,5
	2.10	1.06	1.89	1.61		1.48	2.53	0.24	0.39	0.73
32	60,1	33,3	54	48	M45x1	44	66	6	10	18,5
	2.37	1.31	2.12	1.89		1.73	2.60	0.24	0.39	0.73
36	66,3	38,5	61	55	M52x1	51	66	6	10	18,5
	2.61	1.51	2.40	2.16		2.0	2.60	0.24	0.39	0.73
40	72,5	46	68	62	M59x1	58	66	6	10	18,5
	2.85	1.81	2.68	2.44		2.28	2.60	0.24	0.39	0.73

* Nominal values after coupling backshell

Dimensions are mm. over inches

Straight plug with an individual wire sealing grommet, RFI shield spring plus a special backshell and cable clamp for shielded, jacketed cables, (for shielding characteristics, see page 12). CIR06 type has no RFI shield spring.

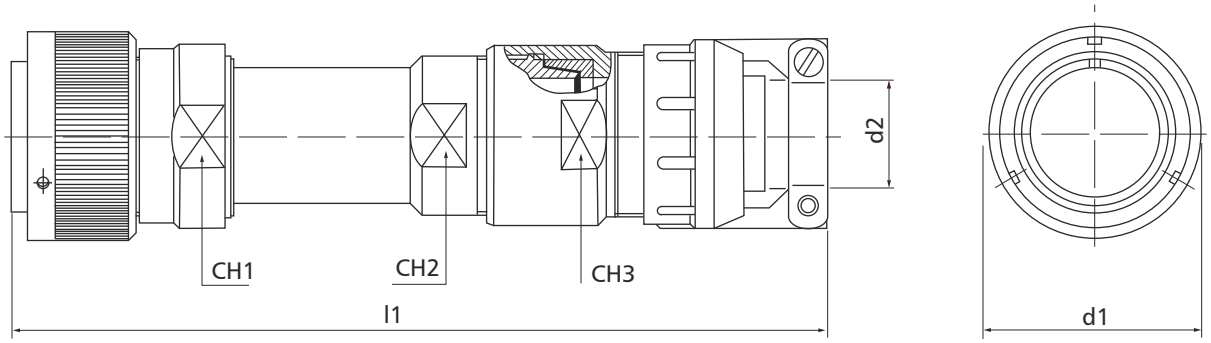

Shell Size	d_1 max.	d_2 open	d_2 closed	l_1 * ~	CH. 1 —	CH. 2 + 0 - 0,2	CH. 3 + 0 - 0,2
18	36,5 1.44	15,87 0.62	9,5 0.375	170 6.69	29 1.14	24 0.94	30 1.18
20	39,9 1.57	19 0.75	11,3 0.445	170 6.69	33 1.30	30 1.18	32 1.26
22	43,1 1.70	19 0.75	11,3 0.445	170 6.69	36 1.42	30 1.18	32 1.26
24	46,6 1.83	23,8 0.938	15,5 0.610	175 6.89	39 1.53	32 1.26	36 1.42
28	53,4 2.10	23,8 0.938	15,5 0.610	175 6.89	46 1.81	32 1.26	36 1.42
32	60,1 2.37	31,75 1.25	23,4 0.921	185 7.28	52 2.05	46 1.81	50 1.97
36	66,3 2.61	35 1.378	24,5 0.921	190 7.48	58 2.28	50 1.97	55 2.16
40	72,5 2.85	41,25 1.625	29,9 1.177	200 7.87	65 2.56	55 2.16	60 2.36

* Nominal values

Dimensions are mm. over inches

Plug with RFI grounding fingers for terminating braided shield. Straight backshell with a swivel coupling nut and adapter suitable for use with heat shrink tubing or boot. The backshell includes a knurled extension for the shield termination via a tinel lock ring (not supplied). A wire sealing grommet is included. ASBT same as SBT but without a grommet.

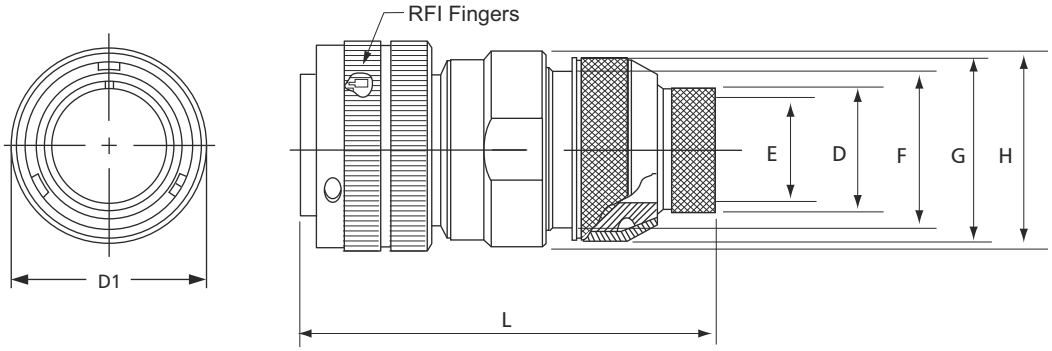

Shell Size	D_1 Maximum	D Maximum	E+/- 0,25 .010	F	G	H +/- 0,5 .020	L CIR06 L CIRG06 Approximate	Tinel Ring P/N
10SL	22,8 0.90	11,1 .44	7,9 3.12	16,3 .64	18,5 .73	22,0 .866	61,8 2.43	TR 05
14S	29,2 1.15	14,3 .56	11,1 .437	20,0 .79	22,0 .87	24,8 .976	61,8 2.43	TR 07
16S	33,0 1.30	15,9 .63	12,7 .500	23,0 .91	25,0 .98	27,8 1.094	63,8 2.51	TR 08
16	33,0 1.30	15,9 .63	12,7 .500	23,0 .91	25,0 .98	27,8 1.094	73,3 2.89	TR 08
18	36,5 1.44	19,1 .75	15,9 .625	24,5 .97	28.0 1.10	30,8 1.213	74,5 2.93	TR 10
20	39,9 1.57	22,3 .88	19,1 .750	28.5 1.12	32,0 1.26	34,8 1.370	75,7 2.98	TR 12
22	43,1 1.70	25,4 1.00	22,2 .875	30,5 1.20	34,0 1.34	37,8 1.488	75,0 2.95	TR 14
24	46,6 1.84	28,7 1.13	25,4 1.00	34,5 1.36	38,0 1.50	40,8 1.606	75,0 2.95	TR 16
28	53,4 2.10	31,8 1.25	28,6 1.125	37,5 1.48	41,0 1.61	47,8 1.881	76,1 3.00	TR 18
32	60,1 2.37	31,8 1.25	28,6 1.125	44,0 1.73	48,0 1.89	53,8 2.118	77,7 3.06	TR 18
36	66,3 2.61	44,5 1.75	41,3 1.625	51,0 2.01	55,0 2.17	60,8 2.394	76,5 3.01	Not Available
40	72,4 2.85	50.8 2.00	47,6 1.875	58,0 2.28	62,0 2.44	67,8 2.669	76,5 3.01	Not Available

Dimensions are mm. over inches

Plug for terminating braided shield. Straight backshell with a swivel coupling nut and adapter suitable for use with heat shrink tubing or boot. The backshell includes a knurled extension for the shield termination via a tinel lock ring (not supplied). A wire sealing grommet is included. ASBT same as SBT but without a grommet.

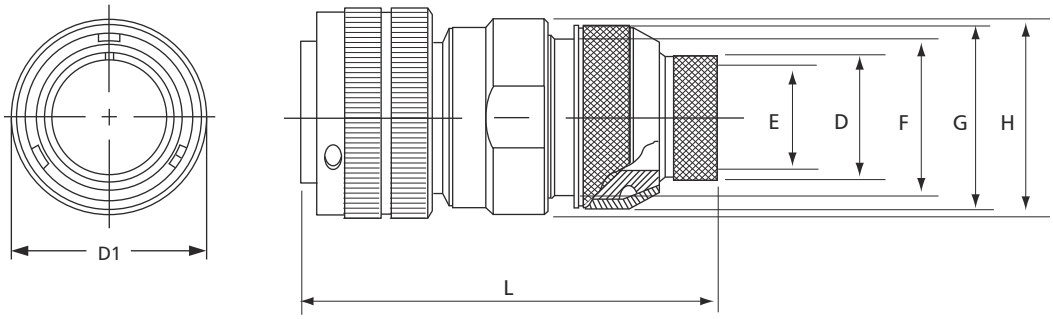

Shell Size	D_1 Maximum	D Maximum	E+/- 0,25 .010	F	G	H +/- 0,5 .020	L CIR06 L CIRG06 Approximate	Tinel Ring P/N
10SL	22,8 0.90	11,1 .44	7,9 3.12	16,3 .64	18,5 .73	22,0 .866	61,8 2.43	TR 05
14S	29,2 1.15	14,3 .56	11,1 .437	20,0 .79	22,0 .87	24,8 .976	61,8 2.43	TR 07
16S	33,0 1.30	15,9 .63	12,7 .500	23,0 .91	25,0 .98	27,8 1.094	63,8 2.51	TR 08
16	33,0 1.30	15,9 .63	12,7 .500	23,0 .91	25,0 .98	27,8 1.094	73,3 2.89	TR 08
18	36,5 1.44	19,1 .75	15,9 .625	24,5 .97	28.0 1.10	30,8 1.213	74,5 2.93	TR 10
20	39,9 1.57	22,3 .88	19,1 .750	28.5 1.12	32,0 1.26	34,8 1.370	75,7 2.98	TR 12
22	43,1 1.70	25,4 1.00	22,2 .875	30,5 1.20	34,0 1.34	37,8 1.488	75,0 2.95	TR 14
24	46,6 1.84	28,7 1.13	25,4 1.00	34,5 1.36	38,0 1.50	40,8 1.606	75,0 2.95	TR 16
28	53,4 2.10	31,8 1.25	28,6 1.125	37,5 1.48	41,0 1.61	47,8 1.881	76,1 3.00	TR 18
32	60,1 2.37	31,8 1.25	28,6 1.125	44,0 1.73	48,0 1.89	53,8 2.118	77,7 3.06	TR 18
36	66,3 2.61	44,5 1.75	41,3 1.625	51,0 2.01	55,0 2.17	60,8 2.394	76,5 3.01	Not Available
40	72,4 2.85	50.8 2.00	47,6 1.875	58,0 2.28	62,0 2.44	67,8 2.669	76,5 3.01	Not Available

Dimensions are mm. over inches

Plug for terminating jacketed cable. Long metal backshell and non-metallic fitting with PG thread. SL1 same as SL but includes a wire sealing grommet and compression ring.

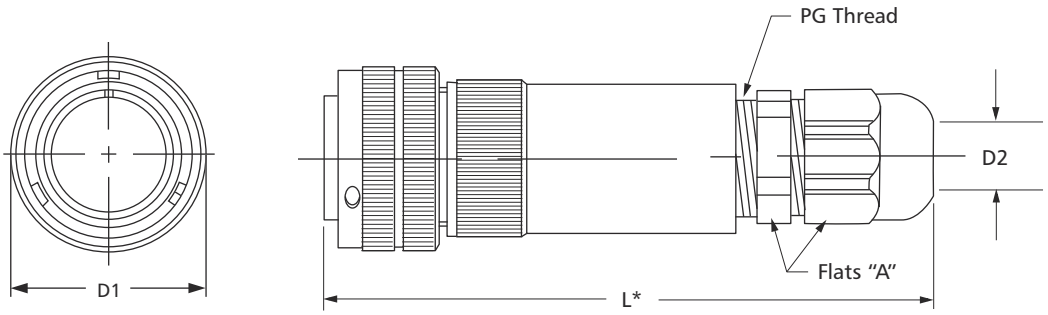

Shell Size	D_1 Maximum
10SL	22,8 0.90
14S	29,2 1.15
16S	33,0 1.30
16	33,0 1.30
18	36,5 1.44
20	39,9 1.57
22	43,1 1.70
24	46,6 1.84
28	53,4 2.10
32	60,1 2.37
36	66,3 2.61
40	72,4 2.85

D2 Suffix in Connector Part No.	D2 Cable Range Min.	D2 Cable Range Max.	D2 Suffix in Connector Part No.	D2 Cable Range Min.	D2 Cable Range Max.	Thread Size	A Wrench Flats
(07)	3,00 .118	6,48 .255	(07R)	2,00 .079	5,00 .197	PG-7	15,01 .591
(09)	3,99 .157	7,98 .314	(09R)	2,00 .079	5,99 .236	PG-9	19,05 .750
(11)	5,00 .197	10,0 .394	(11R)	3,00 .118	7,09 .279	PG-11	22,00 .866
(13)	5,99 .236	11,99 .472	(13R)	8,66 .341	8,97 .353	PG-13	24,13 .950
(16)	10,0 .394	13,99 .551	(16R)	10,74 .423	12,22 .481	PG-16	27,00 1.063
(21)	13,84 .545	18,00 .709	(21R)	12,22 .481	15,67 .617	PG-21	32,99 1.299
(29)	17,98 .708	24,99 .984	(29R)	13,00 .512	19,99 .787	PG-29	42,01 1.654
(36)	22,0 .866	31,98 1.259	(36R)	19,99 .787	25,99 1,023	PG-36	53,00 2.087
(42)	31,98 1.259	38,00 1.496	(42R)	24,00 .945	30,99 1.220	PG-42	59.99 2.362
(48)	36,98 1.456	43,99 1.732	(48R)	28,98 1.141	35,00 1.378	PG-48	64,99 2.559

*Dimension "L" is dependent on the backshell, the cable range and the fitting used. Verify with our Customer Service Department.

Dimensions are mm. over inches

Plug for terminating jacketed cable. Long metal backshell and non-metallic spiral fitting with PG thread (to prevent sharp angle bending). SLX1 same as SLX but includes a wire sealing grommet and compression ring.

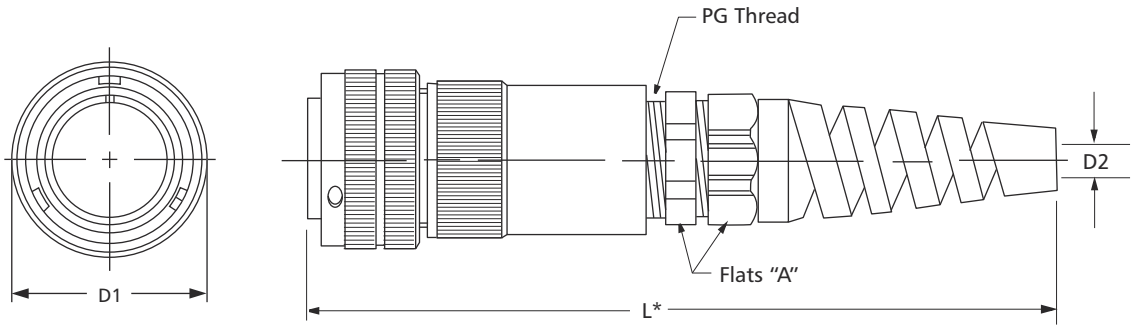

Shell Size	D_1 Maximum
10SL	22,8 0.90
14S	29,2 1.15
16S	33,0 1.30
16	33,0 1.30
18	36,5 1.44
20	39,9 1.57
22	43,1 1.70
24	46,6 1.84
28	53,4 2.10
32	60,1 2.37
36	66,3 2.61
40	72,4 2.85

D2 Suffix in Connector Part No.	D2 Cable Range Min.	D2 Cable Range Max.	D2 Suffix in Connector Part No.	D2 Cable Range Min.	D2 Cable Range Max.	Thread Size	A Wrench Flats
(07)	3,00 .118	6,48 .255	(07R)	2,00 .079	5,00 .197	PG-7	15,01 .591
(09)	3,99 .157	7,98 .314	(09R)	2,00 .079	5,99 .236	PG-9	19,05 .750
(11)	5,00 .197	10,0 .394	(11R)	3,00 .118	7,09 .279	PG-11	22,00 .866
(13)	5,99 .236	11,99 .472	(13R)	8,66 .341	8,97 .353	PG-13	24,13 .950
(16)	10,0 .394	13,99 .551	(16R)	10,74 .423	12,22 .481	PG-16	27,00 1.063
(21)	13,84 .545	18,00 .709	(21R)	12,22 .481	15,67 .617	PG-21	32,99 1.299

*Dimension "L" is dependent on the backshell, the cable range and the fitting used. Verify with our Customer Service Department.

Dimensions are mm. over inches

Plug for terminating jacketed cable. Long WK backshell and backnut assembly suitable to seal and grip on the jacket of the cable. WKG same as WK but includes a wire sealing grommet and compression ring.

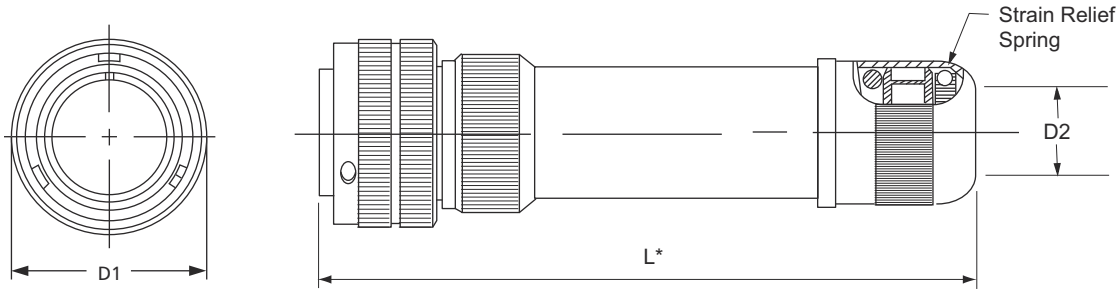

Shell Size	D_1 Maximum
10SL	22,8 0.90
14S	29,2 1.15
16S	33,0 1.30
16	33,0 1.30
18	36,5 1.44
20	39,9 1.57
22	43,1 1.70
24	46,6 1.84
28	53,4 2.10
32	60,1 2.37
36	66,3 2.61
40	72,4 2.85

D2 Suffix in Connector Part No.	D2 Cable Range Min.	D2 Cable Range Max.	D2 Suffix in Connector Part No.	D2 Cable Range Min.	D2 Cable Range Max.
02	3,18 .125	6,35 .250	08	19,86 .782	25,4 1.000
03	3,99 .157	9,53 .375	09	23,04 .907	28,58 1.125
04	7,16 .282	12,7 .500	10	26,21 1.032	31,75 1.250
05	10,34 .407	15,8 .625	11	29,39 1.157	34,93 1.375
06	13,51 .532	19,05 .750	12	32,56 1.282	38,1 1.500
07	16,69 .657	22,23 .875	17	50,80 2.000	53,99 2.125

*Dimension "L" will vary from the values indicated with escalating or de-escalating backshells and some special insert configurations. Verify with our Customer Service Department.

Dimensions are mm. over inches

Plug for terminating braided shield. Long WK backshell, grommet and backnut assembly suitable for shield termination and strain relief of the jacket of the cable.

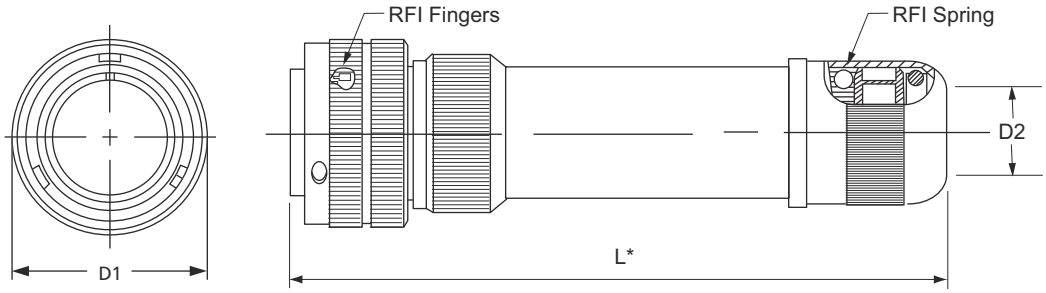

Shell Size	D_1 Maximum	L Approximate
10SL	22,8 0.90	111 4.37
14S	29,2 1.15	112 4.41
16S	33,0 1.30	100 3.94
16	33,0 1.30	110 4.33
18	36,5 1.44	127 5.00
20	39,9 1.57	127 5.00
22	43,1 1.70	133 5.24
24	46,6 1.84	134 5.28
28	53,4 2.10	134 5.28
32	60,1 2.37	136 5.35
36	66,3 2.61	136 5.35
40	72,4 2.85	136 5.35

D2 Suffix in Connector Part No.	D2 Cable Range Min.	D2 Cable Range Max.	D2 Suffix in Connector Part No.	D2 Cable Range Min.	D2 Cable Range Max.
02	3,18 .125	6,35 .250	08	19,86 .782	25,4 1.000
03	3,99 .157	9,53 .375	09	23,04 .907	28,58 1.125
04	7,16 .282	12,7 .500	10	26,21 1.032	31,75 1.250
05	10,34 .407	15,8 .625	11	29,39 1.157	34,93 1.375
06	13,51 .532	19,05 .750	12	32,56 1.282	38,1 1.500
07	16,69 .657	22,23 .875	17	50,80 2.000	53,99 2.125

*Dimension "L" will vary from the values indicated with escalating or de-escalating backshells and some special insert configurations. Verify with our Customer Service Department.

Dimensions are mm. over inches

Straight plug with backshell and backnut assembly with strain relief and seal for jacketed cable. Individual wire sealing grommet not included.

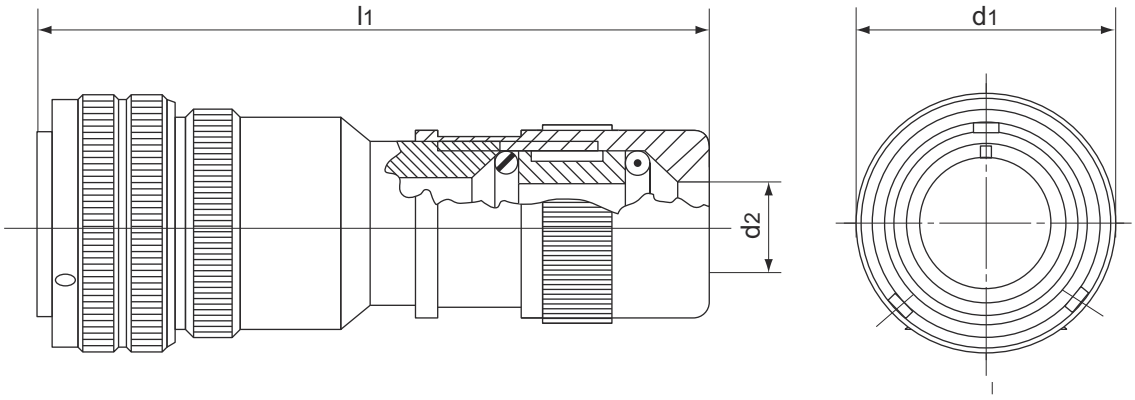

Shell Size	d_1 max.	l_1 ≃
10SL	22,8 0.90	111 4.37
14S	29,2 1.15	112 4.41
16S	32 1.26	100 3.94
16	32 1.26	110 4.33
18	36,5 1.44	127 5.00
20	39,9 1.57	127 5.00
22	43,1 1.70	133 5.24
24	46,6 1.83	134 5.27
28	53,4 2.10	134 5.27
32	60,1 3.37	136 5.35
36	66,3 2.61	136 5.35
40	72,5 2.85	136 5.35

Termination type (YY)	d_2 min.	d_2 max.
02	3,18 0.125	6.35 0.25
03	3,99 0.157	9,53 0.375
04	7,16 0.282	12,7 0.50
05	10,34 0.407	15,88 0.625
06	13,51 0.532	19,05 0.75
07	16,69 0.657	22,23 0.875
08	19,86 0.782	25,4 1.00
09	23,04 0.907	28,58 1.125
10	26,21 1.032	31,75 1.25
11	29,39 1.157	34,93 1.375
12	32,56 1.282	38,1 1.50
17	50,80 2.000	53,99 2.125

*Dimension "L" is dependent on the backshell and backnut assembly combination. Dimension shown is only typical. Consult factory for actual dimensions.

Plug for terminating jacketed cable. Extended heavy duty coupling nut and long LC backshell with internal adapter suitable for various sizes of cable, grommet, compression ring and a cord grip included. LCG same as LC but without the wire sealing grommet and compression ring.

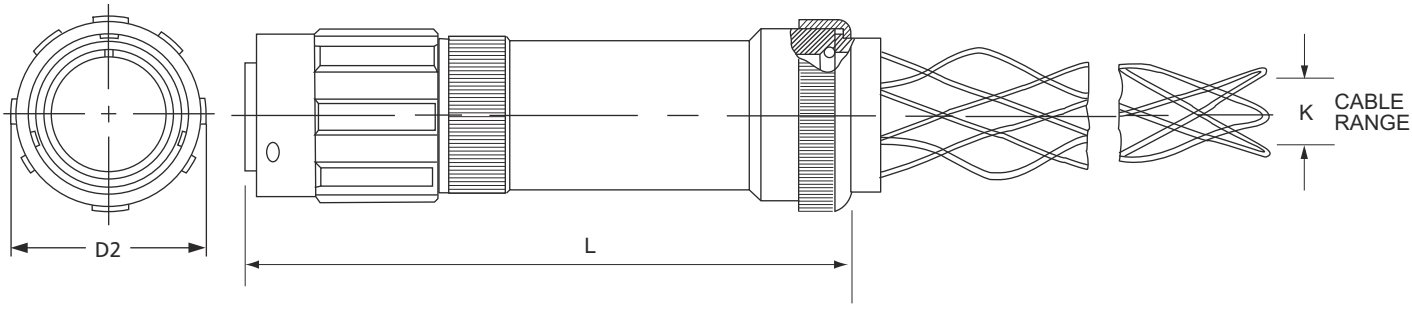

Shell Size	D_2 Maximum	L Approximate
10SL	25,3 0.97	100 3.94
14S	31,7 1.25	100 3.94
16S	35,9 1.41	100 3.94
16	35,9 1.41	110 4.33
18	39,5 1.56	110 4.33
20	42,9 1.69	116 4.57
22	46,1 1.82	116 4.57
24	49,5 1.95	120 4.72
28	56,9 2.24	129 5.08
32	63,7 2.51	145 5.71
36	70,1 2.76	145 5.71
40	75,7 2.98	145 5.71

K Suffix in Connector Part Number	K Cable Range Min.	K Cable Range Max.
K0	6,35 .250	9,53 .375
K1	9,53 .375	12,7 .500
K2	12,7 .500	15,87 .625
K3	15,87 .625	19,05 .750
K4	19,05 .750	22,23 .875
K5	22,23 .875	25,4 1.000
K6	25,4 1.000	28,45 1.120
K7	28,45 1.120	31,75 1.250
K8	32,77 1.290	38,1 1.500
K9	39.62 1.560	41,28 1.625
K10	41.28 1.625	44,45 1.750

Dimensions are mm. over inches

Plug for terminating jacketed cable. Extended heavy duty coupling nut, long metal backshell and non-metallic fitting with PG thread. SL1 same as SL but includes a wire sealing grommet and compression ring.

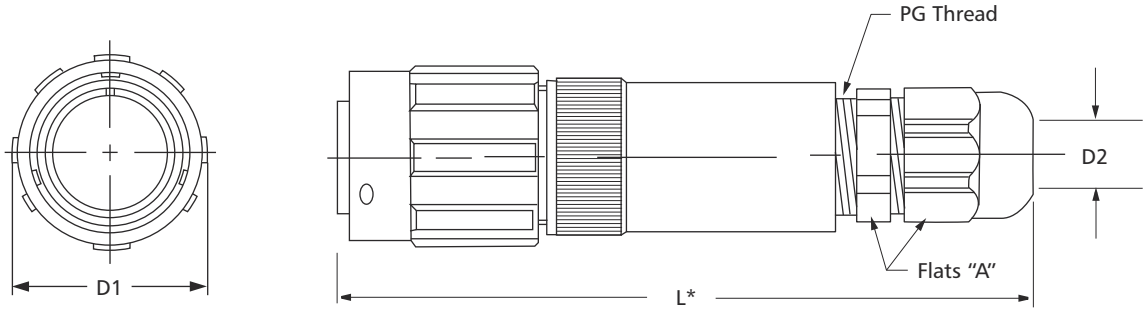

Shell Size	D_1 Maximum
10SL	25,3 0.97
14S	31,7 1.25
16S	35,9 1.41
16	35,9 1.41
18	39,5 1.56
20	42,9 1.69
22	46,1 1.82
24	49,5 1.95
28	56,9 2.24
32	63,7 2.51
36	70,1 2.76
40	75,7 2.98

D2 Suffix in Connector Part No.	D2 Cable Range Min.	D2 Cable Range Max.	D2 Suffix in Connector Part No.	D2 Cable Range Min.	D2 Cable Range Max.	Thread Size	A Wrench Flats
(07)	3,00 .118	6,48 .255	(07R)	2,00 .079	5,00 .197	PG-7	15,01 .591
(09)	3,99 .157	7,98 .314	(09R)	2,00 .079	5,99 .236	PG-9	19,05 .750
(11)	5,00 .197	10,0 .394	(11R)	3,00 .118	7,09 .279	PG-11	22,00 .866
(13)	5,99 .236	11,99 .472	(13R)	8,66 .341	8,97 .353	PG-13	24,13 .950
(16)	10,0 .394	13,99 .551	(16R)	10,74 .423	12,22 .481	PG-16	27,00 1.063
(21)	13,84 .545	18,00 .709	(21R)	12,22 .481	15,67 .617	PG-21	32,99 1.299
(29)	17,98 .708	24,99 .984	(29R)	13,00 .512	19,99 .787	PG-29	42,01 1.654
(36)	22,0 .866	31,98 1.259	(36R)	19,99 .787	25,99 1,023	PG-36	53,00 2.087
(42)	31,98 1.259	38,00 1.496	(42R)	24,00 .945	30,99 1.220	PG-42	59.99 2.362
(48)	36,98 1.456	43,99 1.732	(48R)	28,98 1.141	35,00 1.378	PG-48	64,99 2.559

*Dimension "L" is dependent on the backshell, the cable range and the fitting used. Verify with our Customer Service Department.
Dimensions are mm. over inches

Plug for terminating jacketed cable. Extended heavy duty coupling nut, long metal backshell and non-metallic spiral fitting with PG thread (to prevent sharp angle bending). SLX1 same as SLX but includes a wire sealing grommet and compression ring.

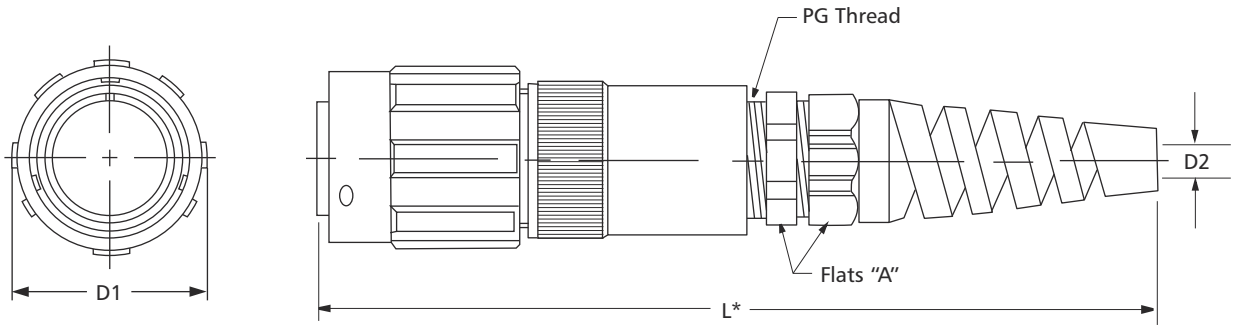

Shell Size	D_1 Maximum
10SL	25,3 0.97
14S	31,7 1.25
16S	35,9 1.41
16	35,9 1.41
18	39,5 1.56
20	42,9 1.69
22	46,1 1.82
24	49,5 1.95
28	56,9 2.24
32	63,7 2.51
36	70,1 2.76
40	75,7 2.98

D2 Suffix in Connector Part No.	D2 Cable Range Min.	D2 Cable Range Max.	D2 Suffix in Connector Part No.	D2 Cable Range Min.	D2 Cable Range Max.	Thread Size	A Wrench Flats
(07)	3,00 .118	6,48 .255	(07R)	2,00 .079	5,00 .197	PG-7	15,01 .591
(09)	3,99 .157	7,98 .314	(09R)	2,00 .079	5,99 .236	PG-9	19,05 .750
(11)	5,00 .197	10,0 .394	(11R)	3,00 .118	7,09 .279	PG-11	22,00 .866
(13)	5,99 .236	11,99 .472	(13R)	8,66 .341	8,97 .353	PG-13	24,13 .950
(16)	10,0 .394	13,99 .551	(16R)	10,74 .423	12,22 .481	PG-16	27,00 1.063
(21)	13,84 .545	18,00 .709	(21R)	12,22 .481	15,67 .617	PG-21	32,99 1.299

*Dimension "L" is dependent on the backshell, the cable range and the fitting used. Verify with our Customer Service Department.
Dimensions are mm. over inches

Specifications and dimensions subject to change
Dimensions shown in mm.

Right angle (90º elbow) plug. R type has an individual wire sealing grommet. CIRG type also has a RFI shield spring (for shielding characteristics, see page 12).

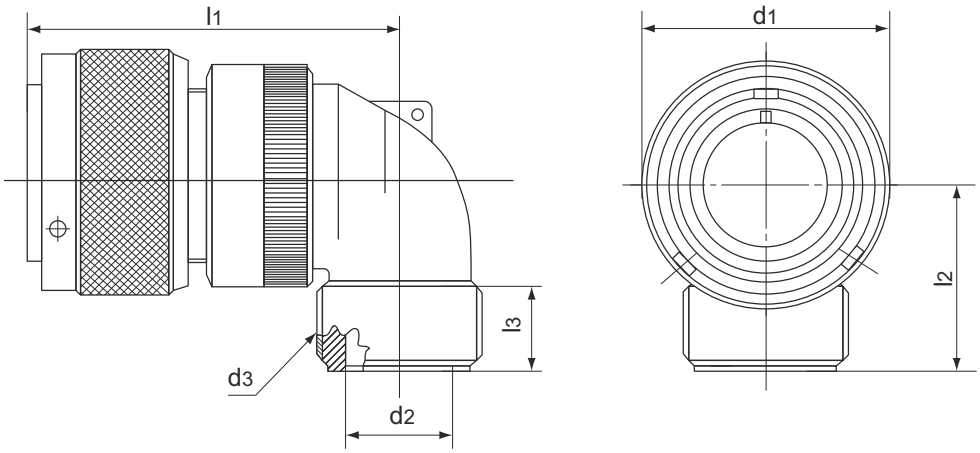

Shell Size	d_1 max.	d_2 +0,2 -0,1	d_3 Thread in inches	l_1 max.	l_2 max.	l_3 min.
10SL	22,8	10,5	5/8 -24 UNEF-2A	45	30	9,4
	0.90	0.41		1.77	1.18	0.37
14S	29,2	11,5	3/4 -20 UNEF-2A	47	30	9,4
	1.15	0.45		1.85	1.18	0.37
16S	32	14,7	7/8 -20 UNEF-2A	48	30	9,4
	1.26	0.59		1.89	1.18	0.37
16	32	14,7	7/8 -20 UNEF-2A	57	30	9,4
	1.26	0.59		2.24	1.18	0.37
18	36,5	17,2	1" -20 UNEF-2A	58	35	9,4
	1.44	0.68		2.28	1.38	0.37
20	39,9	20,35	1"3/16 -18 UNEF-2A	61	35	9,4
	1.57	0.80		2.40	1.38	0.37
22	43,1	23	1"3/16 -18 UNEF-2A	61	35	9,4
	1.70	0.90		2.40	1.38	0.37
24	46,6	25,8	1"7/16 -18 UNEF-2A	66	40	9,4
	1.83	1.01		2.60	1.57	0.37
28	53,4	28,7	1"7/16 -18 UNEF-2A	66	40	9,4
	2.10	1.13		2.60	1.57	0.37
32	60,1	36,5	1"3/4 -18 UNS-2A	72	45	11
	2.37	1.44		2.83	1.77	0.43
36	66,3	42,6	2" -18 UNS-2A	75	50	12,6
	2.61	1.68		2.95	1.97	0.50
40	72,5	48,6	2"1/4 -16 UN-2A	78	55	12,6
	2.85	1.91		3.07	2.16	0.50

Dimensions are mm. over inches

Right angle (90º elbow) plug, with a rubber covered coupling nut for protection against dust and impact.RGG type has an individual wire sealing grommet. To be mated only with receptacles with countersunk mounting holes. See pages 174.

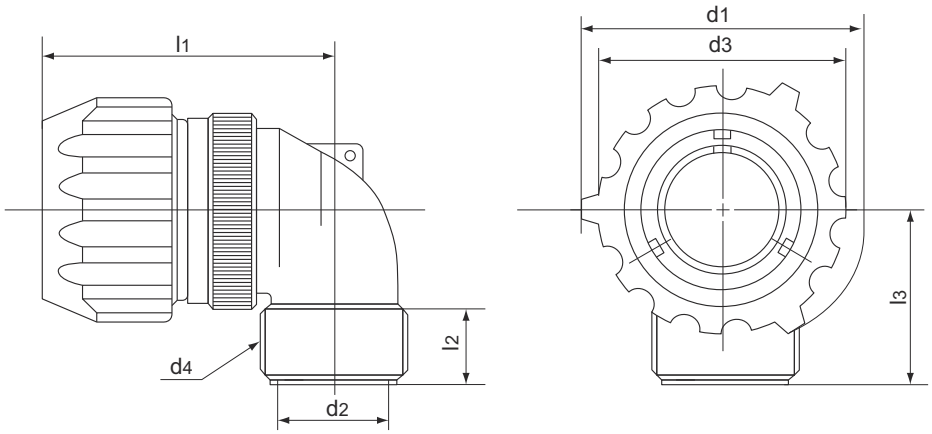

Shell Size	d_1 —	d_2 +0,2 -0,1	d_3 —	d_4 Thread in inches	l_1 max.	l_2 min.	l_3 max.
10SL	33,5	10,5	28,5	5/8 -24 UNEF-2A	49	9,4	30
	1.32	0.41	1.12		1.93	0.37	1.18
14S	40,2	11,5	35,2	3/4 -20 UNEF-2A	53	9,4	30
	1.58	0.45	1.38		2.09	0.37	1.18
16	44	14,7	38,9	7/8 -20 UNEF-2A	63	9,4	30
	1.73	0.58	1.72		2.48	0.37	1.18
18	49	17,2	43,5	1” -20 UNEF-2A	64	9,4	35
	1.93	0.68	1.71		2.52	0.37	1.38
20	51,5	20,35	46	1”3/16 -18 UNEF-2A	67	9,4	35
	2.03	0.80	1.81		2.64	0.37	1.38
22	56	23	50,5	1”3/16 -18 UNEF-2A	67	9,4	35
	2.20	0.90	1.99		2.64	0.37	1.38
24	60	25,8	54	1”7/16 -18 UNEF-2A	73	9,4	40
	2.36	1.01	2.12		2.87	0.37	1.57
28	67	28,7	61	1”7/16 -18 UNEF-2A	73	9,4	40
	2.64	1.13	2.40		2.87	0.37	1.57
32	76	36,5	67,6	1”3/4 -18 UNS-2A	78	11	45
	2.99	1.44	2.66		3.07	0.43	1.77
36	82,3	42,6	74,3	2” -18 UNS-2A	81	12,6	50
	3.24	1.68	2.92		3.19	0.50	1.97
40	88	48,6	80	2”1/4 -16 UN-2A	84	12,6	55
	3.46	1.91	3.15		3.31	0.50	2.16

Dimensions are mm. over inches

Right angle (90º elbow) plug with a cable clamp for jacketed cables. CFZ type also has an individual wire sealing grommet.

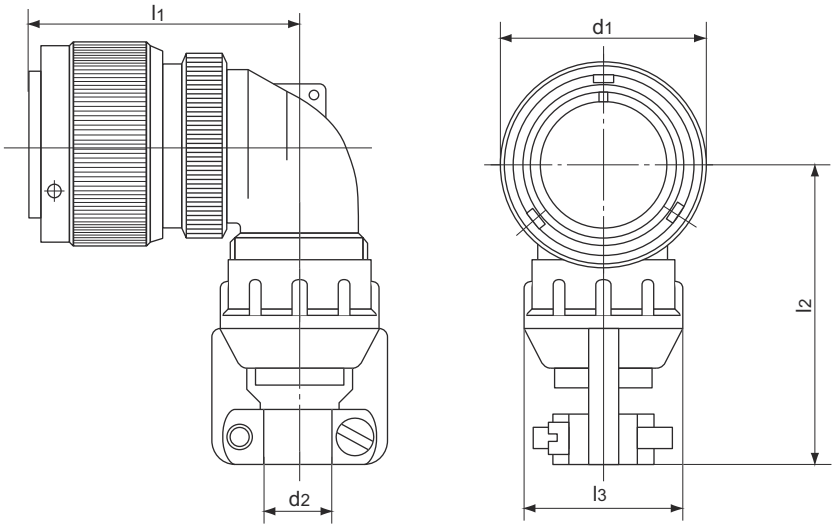

Shell Size	d_1 max.	d_2 Open	d_2 Closed	l_1 max.	l_2 max.	l_3 ± 0,2
10SL	22,8	7,93	2,38	45	61	22,6
	0.90	.312	.094	1.77	2.40	0.89
14S	29,2	11,12	6,35	47	61	25,8
	1.15	.438	.25	1.85	2.40	1.01
16S	32	13,48	8,0	48	61	28,1
	1.26	.531	.315	1.89	2.40	1.11
16	32	13,48	8,0	57	61	28,1
	1.26	.531	.315	2.24	2.40	1.11
18	36,5	15,87	9,6	58	68	31
	1.44	.625	.378	2.28	2.68	1.22
20	39,9	19,0	11,3	61	68	37,3
	1.57	.748	.445	2.40	2.68	1.47
22	43,1	19,0	11,3	61	68	37,3
	1.70	.748	.445	2.40	2.68	1.47
24	46,6	23,8	15,5	66	76	42
	1.83	.938	.610	2.60	2.99	1.65
28	53,4	23,8	15,5	66	76	42
	2.10	.938	.610	2.60	2.99	1.65
32	60,1	31,75	23,4	72	87	54
	2.37	1.250	.921	2.83	3.42	2.12
36	66,3	35,0	23,4	75	98	57,1
	2.61	1.378	.921	2.95	3.86	2.25
40	72,5	41,25	29,9	78	103	63,5
	2.85	1.625	1.177	3.07	4.05	2.50

Dimensions are mm. over inches

Right angle (90º elbow) plug with a cable clamp for jacketed cables and a rubber coupling nut for protection against dust and impact. CFZGG type also has an individual wire sealing grommet. To be mated only with receptacles having countersunk mounting holes. See pages 197.

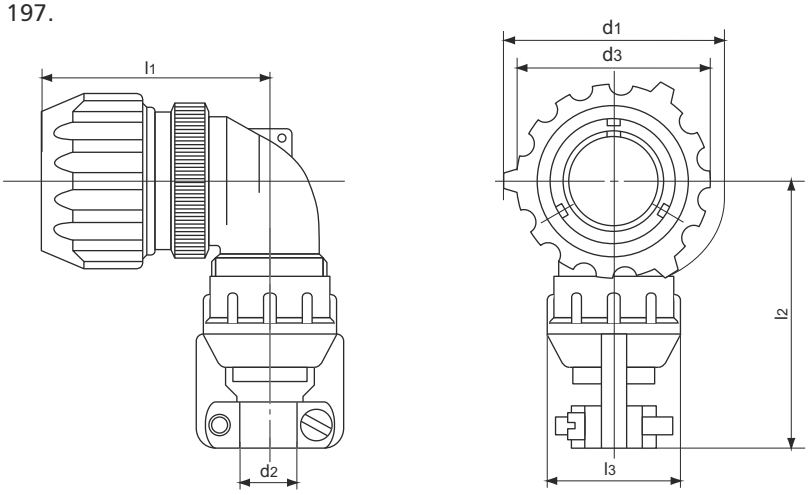

Shell Size	d_1 —	d_2 Open	d_2 Closed	d_3 —	l_1 max.	l_2 max.	l_3 ±0,2
10SL	33,5	7,93	2,38	28,5	49	61	22,6
	1.32	.312	.094	1.12	1.93	2.40	0.89
14S	40,2	11,12	6,35	32,5	53	61	25,8
	1.58	.438	.25	1.28	2.09	2.40	1.01
16	44	13,48	8,0	38,9	63	61	28,1
	1.73	.531	.315	1.53	2.48	2.40	1.11
18	49	15,87	9,6	43,5	64	68	31
	1.93	.625	.378	1.71	2.52	2.68	1.22
20	51,5	19,0	11,3	46	67	68	37,3
	2.03	.748	.445	1.81	2.64	2.68	1.47
22	56	19,0	11,3	50,5	67	68	37,3
	2.20	.748	.445	1.99	2.64	2.68	1.47
24	60	23,8	15,5	54	73	76	42
	2.36	.938	.610	2.12	2.87	2.99	1.65
28	67	23,8	15,5	61	73	76	42
	2.64	.938	.610	2.40	2.87	2.99	1.65
32	76	31,75	23,4	67,6	78	87	54
	2.99	1.250	.921	2.66	3.07	3.42	2.12
36	82,3	35,0	23,4	74,3	81	98	57,1
	3.24	1.378	.921	2.92	3.19	3.86	2.25
40	88	41,25	29,9	80	84	103	63,5
	3.46	1.625	1.177	3.15	3.31	4.05	2.50

Dimensions are mm. over inches

Right angle (90º elbow) plug with an individual wire sealing grommet and a cable clamp with a bushing. AF type has no grommet.

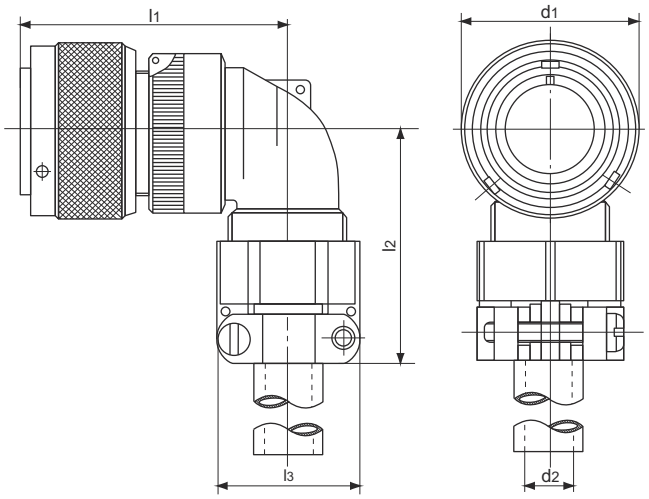

Shell Size	d_1 max.	d_2 * max.	l_1 max.	l_2 max.	l_3 max.
10SL	22,8 0.90	5,6 0.22	45 1.77	42 1.65	22,7 0.89
14S	29,2 1.15	7,9 0.31	47 1.85	42 1.65	27,5 1.08
16S	32 1.26	11 0.43	48 1.89	45 1.77	30 1.18
16	32 1.26	11 0.43	57 2.24	45 1.77	30 1.18
18	36,5 1.44	14,2 0.56	58 2.28	53 2.09	32,2 1.27
20	39,9 1.57	15,8 0.62	61 2.40	53 2.09	37,5 1.48
22	43,1 1.70	15,8 0.62	61 2.40	53 2.09	37,5 1.48
24	46,6 1.83	19 0.75	66 2.60	58 2.28	43,3 1.70
28	53,4 2.10	19 0.75	66 2.60	58 2.28	43,3 1.70
32	60,1 2.37	23,8 0.94	72 2.83	66 2.60	51,7 2.03
36	66,3 2.61	31,7 1.25	75 2.95	69 2.72	58 2.28
40	72,5 2.85	34,9 1.37	78 3.07	95 3.74	68,5 2.70

* Max permissible outside diameter of cable
Dimensions are mm. over inches

Right angle (90º elbow) plug with an individual wire sealing grommet, cable clamp, bushing and rubber covered coupling nut for protection against dust and impact. AFGG type has no grommet. To be mated only with receptacles having countersunk mounting holes. See pages 197.

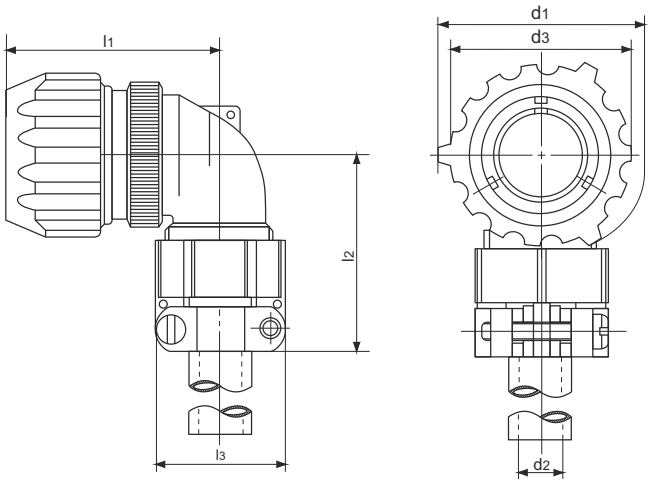

Shell Size	d_1 —	d_2 * max.	d_3 —	l_1 max.	l_2 max.	l_3 max.
10SL	33,5	5,6	28,5	49	42	22,7
	1.32	0.22	1.12	1.93	1.65	0.89
14S	40,2	7,9	35,2	53	42	27,5
	1.58	0.31	1.38	2.09	1.65	1.08
16	44	11	38,9	63	45	30
	1.73	0.43	1.53	2.48	1.77	1.18
18	49	14,2	43,5	64	53	32,2
	1.93	0.56	1.71	2.52	2.09	1.27
20	51,5	15,8	46	67	53	37,5
	2.03	0.62	1.81	2.64	2.09	1.48
22	56	15,8	50,5	67	53	37,5
	2.20	0.62	1.99	2.64	2.09	1.48
24	60	19	54	73	58	43,3
	2.36	0.75	2.12	2.87	2.28	1.70
28	67	19	61	73	58	43,3
	2.64	0.75	2.40	2.87	2.28	1.70
32	76	23,8	67,6	78	66	51,7
	2.99	0.94	2.66	3.07	2.60	2.03
36	82,3	31,7	74,3	81	69	58
	3.24	1.25	2.92	3.19	2.72	2.28
40	88	34,9	80	84	95	68,5
	3.46	1.37	3.15	3.31	3.74	2.70

* Max permissible outside diameter of cable
Dimensions are mm. over inches

Right angle plug for terminating jacketed cable. Long LC backshell with internal adapter suitable for various sizes of cable, grommet, compression ring and a cord grip included. LCG same as LC but without the wire sealing grommet and compression ring.

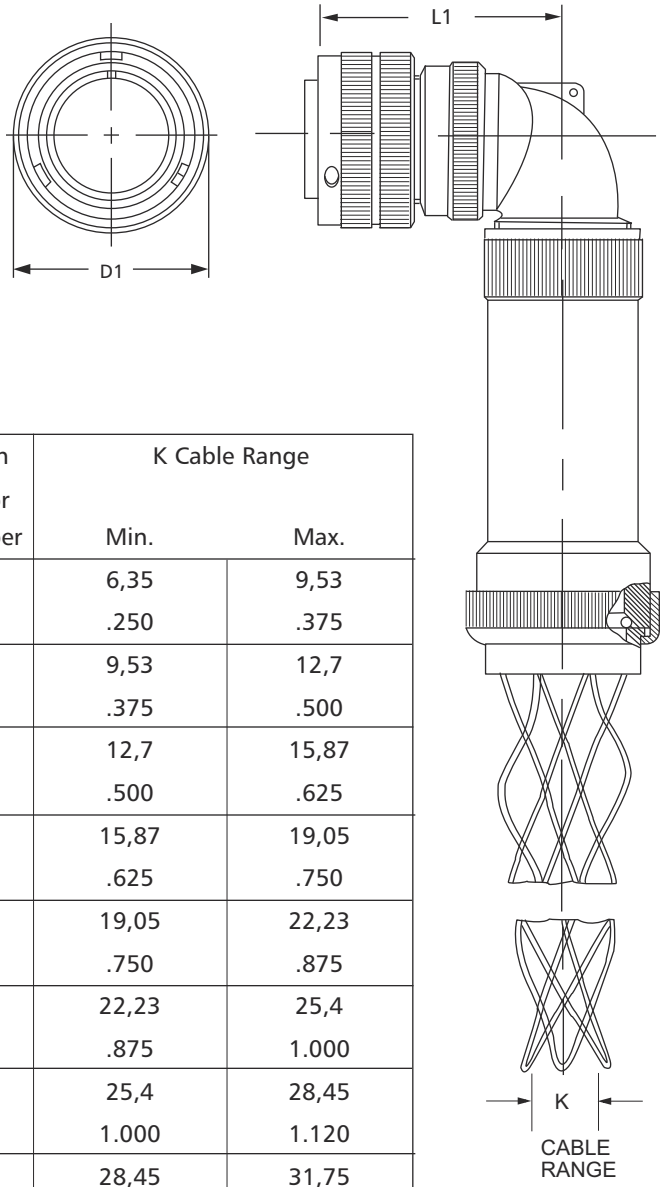

Shell Size	D_1 Maximum	L - CIR08 Approximate
10SL	22,8 0.90	38,1 1.50
14S	29,2 1.15	39,7 1.56
16S	33,0 1.30	42,9 1.69
16	33,0 1.30	52,4 2.06
18	36,5 1.44	54,0 2.13
20	39,9 1.57	59,7 2.35
22	43,1 1.70	59,1 2.33
24	46,6 1.84	63,9 2.52
28	53,4 2.10	63,9 2.52
32	60,1 2.37	69.8 2.75
36	66,3 2.61	73.0 2.87
40	72,4 2.85	76.1 3.00

K Suffix in Connector Part Number	K Cable Range Min.	K Cable Range Max.
K0	6,35 .250	9,53 .375
K1	9,53 .375	12,7 .500
K2	12,7 .500	15,87 .625
K3	15,87 .625	19,05 .750
K4	19,05 .750	22,23 .875
K5	22,23 .875	25,4 1.000
K6	25,4 1.000	28,45 1.120
K7	28,45 1.120	31,75 1.250
K8	32,77 1.290	38,1 1.500
K9	39.62 1.560	41,28 1.625
K10	41.28 1.625	44,45 1.750

Dimensions are mm. over inches

Plug for terminating conduit. Right angle NM backshell with adapter and backnut assembly to seal and grip on the jacket of a non-metalic flexible *CN-P type Anaconda sealtite conduit*. A wire sealing grommet and compression ring is included. NMG same as NM but without a grommet or compression ring.

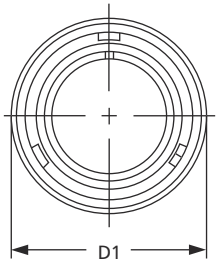

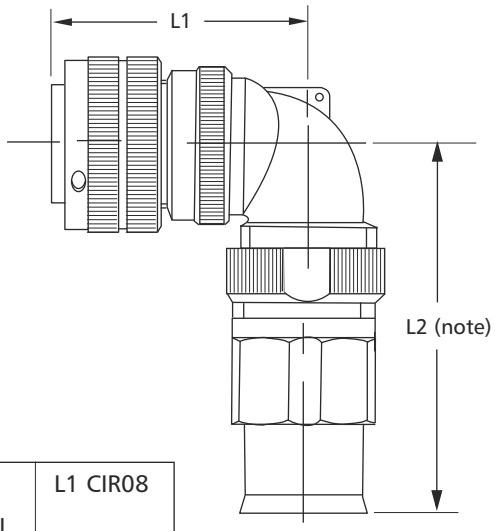

Shell Size	D_1 Maximum
10SL	22,8 0.90
14S	29,2 1.15
16S	33,0 1.30
16	33,0 1.30
18	36,5 1.44
20	39,9 1.57
22	43,1 1.70
24	46,6 1.84
28	53,4 2.10
32	60,1 2.37
36	66,3 2.61
40	72,4 2.85

Conduit (CN-P Type) Trade Size	Suffix in Connector Part Number
3/8	(038)
1/2	(050)
3/4	(075)
1	(100)
1 1/4	(125)
1 1/2	(150)
2	(200)

Note: Dimension "L2" is dependent on conduit size used with each shell size. Please consult our Customer Service Department.

Shell Size	L1 CIR08 Approximate
10SL	38,1 1.50
14S	39,7 1.56
16S	42,9 1.69
16	52,4 2.06
18	54 2.13
20	59,7 2.35
22	59,1 2.33
24	63,9 2.52
28	63,9 2.52
32	69,8 2.75
36	73 2.87
40	76,1 3.00

Dimensions are mm. over inches

Plug for terminating conduit. Right angle RK backshell with adapter and backnut assembly to seal and grip on the jacket of a steel core flexible *EF type Anaconda sealtite conduit*. A wire sealing grommet and compression ring is included. ARK same as RK but without a grommet or compression ring.

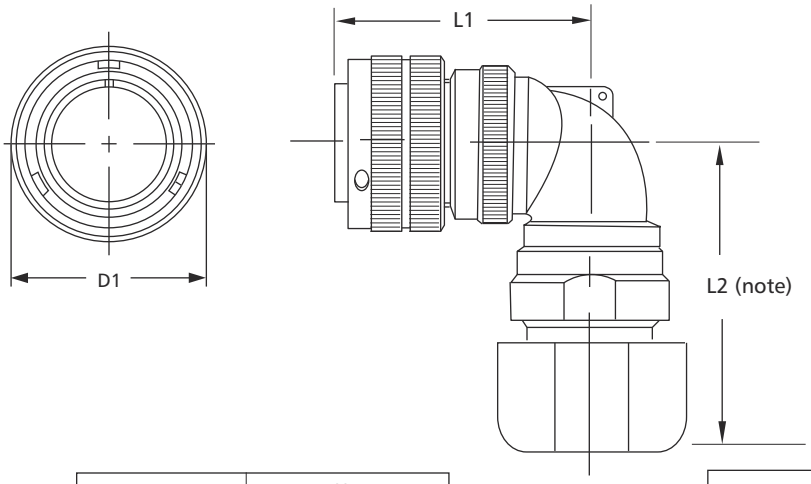

Shell Size	D_1 Maximum
10SL	22,8 0.90
14S	29,2 1.15
16S	33,0 1.30
16	33,0 1.30
18	36,5 1.44
20	39,9 1.57
22	43,1 1.70
24	46,6 1.84
28	53,4 2.10
32	60,1 2.37
36	66,3 2.61
40	72,4 2.85

Conduit (EF Type) Trade Size	Suffix in Connector Part Number
3/8	(038)
1/2	(050)
3/4	(075)
1	(100)
1 1/4	(125)
1 1/2	(150)
2	(200)

Note: Dimension "L2" is dependent on conduit size used with each shell size. Please consult our Customer Service Department.

Shell Size	L1 CIR08 Approximate
10SL	38,1 1.50
14S	39,7 1.56
16S	42,9 1.69
16	52,4 2.06
18	54 2.13
20	59,7 2.35
22	59,1 2.33
24	63,9 2.52
28	63,9 2.52
32	69,8 2.75
36	73 2.87
40	76,1 3.00

Dimensions are mm. over inches

Right angle (90º elbow) plug with an individual wire sealing grommet, RFI shield spring and a special backshell for shield braid and heat shrinkable tubing termination (for shielding characteristics, see page 12). CIR08SB type has no RFI shield spring.

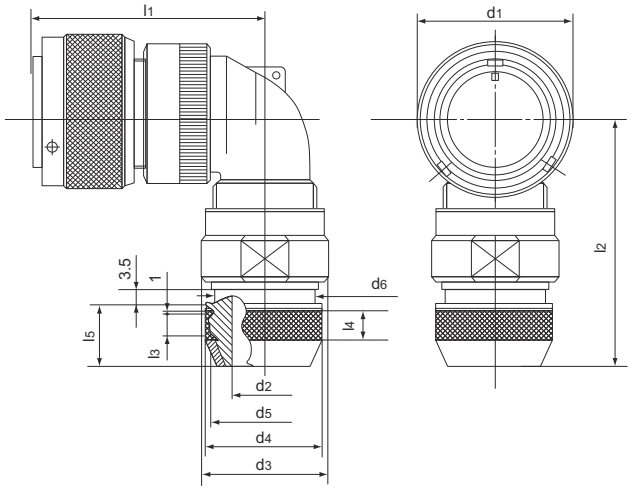

Shell Size	d_1 max.	d_2 min.	d_3 max.	d_4 + 0,5 - 0	d_5 Thread	d_6 max.	l_1 max.	l_2 ~	l_3 min.	l_4 + 0,5	l_5 + 0,1
10SL	22,8	8,6	22	18,5	M16x1	16,3	45	52,1	4,5	5,5	17
	0.90	0.34	0.87	0.73		0.64	1.77	2.05	0.18	0.22	0.67
14S	29,2	10,6	25	22	M20x1	20	47	53,7	5	7	17
	1.15	0.42	0.98	0.87		0.79	1.85	2.11	0.20	0.27	0.67
16S	32	13,5	28	25	M23x1	23	48	57,3	6	8	18,5
	1.26	0.53	1.10	0.98		0.90	1.89	2.25	0.24	0.31	0.73
16	32	13,5	28	25	M23x1	23	57	57,3	6	8	18,5
	1.26	0.53	1.10	0.98		0.90	2.24	2.25	0.24	0.31	0.73
18	36,5	14,6	31	28	M26x1	24,5	58	60,7	6	8	18,5
	1.44	0.57	1.22	1.10		0.96	2.28	2.39	0.24	0.31	0.73
20	39,9	18,5	36	32	M30x1	28,5	61	62,5	6	10	18,5
	1.57	0.73	1.42	1.26		1.12	2.40	2.46	0.24	0.39	0.73
22	43,1	20,8	38	34	M32x1	30,5	61	63,8	6	10	18,5
	1.70	0.82	1.50	1.34		1.20	2.40	2.51	0.24	0.39	0.73
24	46,6	24,6	44	38	M36x1	34,5	66	66	6	10	18,5
	1.83	0.97	1.73	1.50		1.36	2.60	2.60	0.24	0.39	0.73
28	53,4	27	48	41	M39x1	37,5	66	67,6	6	10	18,5
	2.10	1.06	1.89	1.61		1.48	2.60	2.66	0.24	0.39	0.73
32	60,1	33,3	56	48	M45x1	44	72	74	6	10	18,5
	2.37	1.31	2.20	1.89		1.73	2.83	2.91	0.24	0.39	0.73
36	66,3	38,5	61	55	M52x1	51	75	77,1	6	10	18,5
	2.61	1.51	2.40	2.16		2.0	2.95	3.03	0.24	0.39	0.73
40	72,5	46	68	62	M59x1	58	78	81,1	6	10	18,5
	2.85	1.81	2.68	2.44		2.28	3.07	3.19	0.24	0.39	0.73

Dimensions are mm. over inches

Right angle (90º elbow) plug with an individual wire sealing grommet, RFI shield spring and a special backshell and cable clamp for shielded jacketed cable (for shielding characteristics, see page 12). CIR08 type has no shield spring.

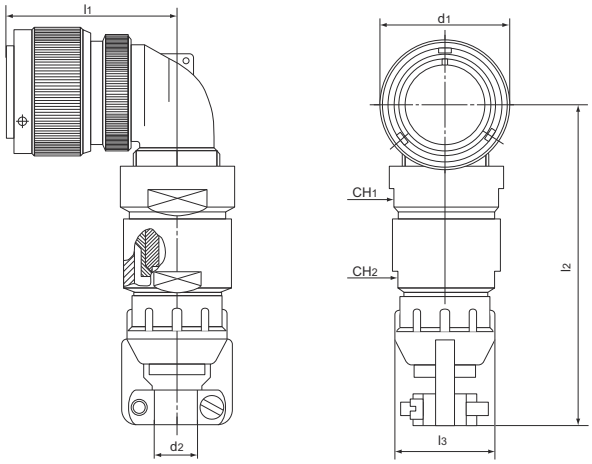

Shell Size	d_1 max.	d_2 open	d_2 closed	l_1 max.	l_2 ~	l_3 + 0,2	CH. 1 + 0 - 0,2	CH. 2 + 0 - 0,2
18	36,5	15,87	9,6	58	120	31	27	30
	1.44	0.625	0.375	2.28	4.72	1.22	1.06	1.18
20	39,9	19	11,3	61	120	37.3	32	32
	1.57	0.748	0.445	2.40	4.72	1.47	1.26	1.26
22	43,1	19	11,3	61	120	37.3	32	32
	1.70	0.748	0.445	2.40	4.72	1.47	1.26	1.26
24	46,6	23,8	15,5	66	130	42	36	36
	1.83	0.938	0.610	2.60	5.12	1.65	1.42	1.42
28	53,4	23,8	15,5	66	130	42	36	36
	2.10	0.938	0.610	2.60	5.12	1.65	1.42	1.42
32	60,1	31,75	23,4	72	145	54	46	50
	2.37	1.25	0.921	2.83	5.71	2.12	1.81	1.97
36	66,3	35	23,4	75	157	57.1	50	55
	2.61	1.378	0.921	2.95	6.18	2.25	1.97	2.16

Dimensions are mm. over inches

Plug for terminating braided shield. Right angle backshell with a swivel coupling nut and adapter suitable for use with heat shrink tubing or boot. The backshell includes a knurled extension for the shield termination via a tinel lock ring (not supplied). A wire sealing grommet is included. ASBT same as SBT but without a grommet.

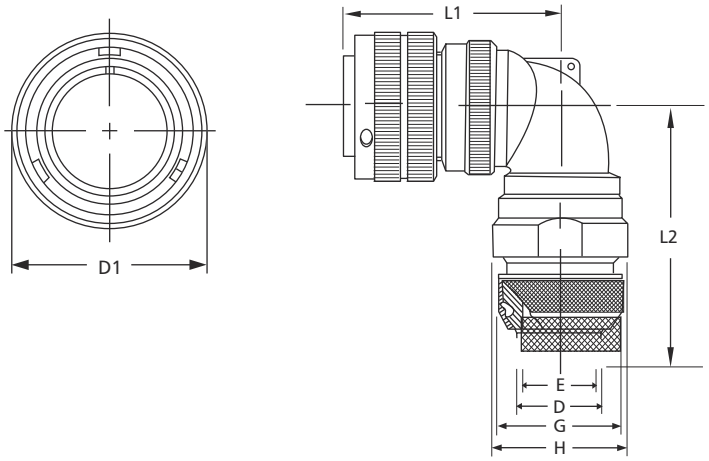

Shell Size	D_1 Maximum	D Maximum	E+/- 0,25 .010	F	G	H +/- 0,5 .020	L1 CIR08 CIRG08 Approximate	L2 CIR08 CIRG08 Approximate	Tinel Ring P/N
10SL	22,8 0.90	11,1 .44	7,9 3.12	16,3 .64	18,5 .73	22,0 .866	38,1 1.50	61,8 2.43	TR 05
14S	29,2 1.15	14,3 .56	11,1 .437	20,0 .79	22,0 .87	24,8 .976	39,7 1.56	63,4 2.50	TR 07
16S	33,0 1.30	15,9 .63	12,7 .500	23,0 .91	25,0 .98	27,8 1.094	42,9 1.69	67,0 2.64	TR 08
16	33,0 1.30	15,9 .63	12,7 .500	23,0 .91	25,0 .98	27,8 1.094	52,4 2.06	67,0 2.64	TR 08
18	36,5 1.44	19,1 .75	15,9 .625	24,5 .97	28.0 1.10	30,8 1.213	54,0 2.13	70,6 2.78	TR 10
20	39,9 1.57	22,3 .88	19,1 .750	28.5 1.12	32,0 1.26	34,8 1.370	59,7 2.35	63,7 2.51	TR 12
22	43,1 1.70	25,4 1.00	22,2 .875	30,5 1.20	34,0 1.34	37,8 1.488	59,1 2.33	65,0 2.56	TR 14
24	46,6 1.84	28,7 1.13	25,4 1.00	34,5 1.36	38,0 1.50	40,8 1.606	63,9 2.52	67,4 2.65	TR 16
28	53,4 2.10	31,8 1.25	28,6 1.125	37,5 1.48	41,0 1.61	47,8 1.881	63,9 2.52	69,4 2.73	TR 18
32	60,1 2.37	31,8 1.25	28,6 1.125	44,0 1.73	48,0 1.89	53,8 2.118	69,8 2.75	75,4 2.97	TR 18
36	66,3 2.61	44,5 1.75	41,3 1.625	51,0 2.01	55,0 2.17	60,8 2.394	73,0 2.87	78,0 3.07	Not Available
40	72,4 2.85	50.8 2.00	47,6 1.875	58,0 2.28	62,0 2.44	67,8 2.669	76,1 3.00	82,5 3.25	Not Available

Dimensions are mm. over inches

Specifications and dimensions subject to change
Dimensions shown in mm.

Dummy receptacle. For countersunk mounting holes, see page 197.

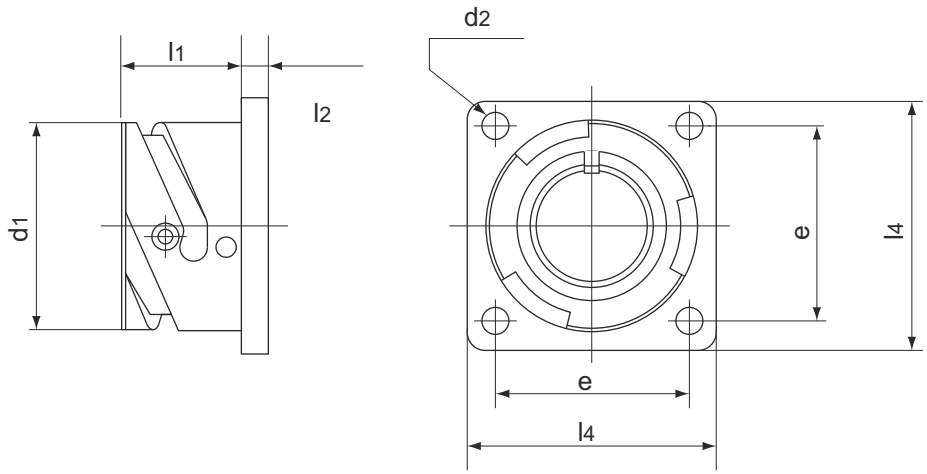

Shell Size	d_1 +0 -0,15	d_2 H13	e ±0,1	l_1 +0,4 -0	l_2 ±0,2	l_4 ±0,3
10SL	18,2 0.72	3,2 0.12	18,2 0.72	14,2 0.56	2,8 0.11	25,4 1.00
14S	24,6 0.97	3,2 0.12	23 0.90	14,2 0.56	3,2 0.12	30 1.81
16S	27,4 1.08	3,2 0.12	24,6 0.97	14,2 0.56	3,2 0.12	32,5 1.28
16	27,4 1.08	3,2 0.12	24,6 0.97	19 0.75	3,2 0.12	32,5 1.28
18	30,8 1.21	3,2 0.12	27 1.06	19 0.75	4 0.16	35 1.38
20	34,2 1.35	3,2 0.12	29,4 1.16	19 0.75	4 0.16	38 1.496
22	37,4 1.47	3,2 0.12	31,8 1.25	19 0.75	4 0.16	41 1.75
24	40,9 1.61	3,7 0.14	34,9 1.37	20,6 0.81	4 0.16	44,5 2.00
28	46,7 1.84	3,7 0.14	39,7 1.56	20,6 0.81	4 0.16	50,8 2.00
32	53,4 2.10	4,3 0.17	44,5 1.75	22,2 0.87	4 0.16	57 2.24
36	59,6 2.35	4,3 0.17	49,2 1.94	22,2 0.87	4 0.16	63,5 2.50
40	65,5 2.58	4,3 0.17	55,5 2.18	22,2 0.87	4 0.16	69,9 2.75

Dimensions are mm. over inches

Crimp Reduction Sleeves

Used to reduce the size of the contact crimp bucket to accept smaller gauge wires.

VEAM Part Number	From Wire Size	To Wire Size
45378	16 AWG	20 AWG
45370	16 AWG	22 AWG
47227-16-24	16 AWG	24 AWG
47227-16-0.12	16 AWG	26 AWG
45372	12 AWG	16 AWG
LV242999-142	12 AWG	18 AWG
LV242999-152	12 AWG	20 AWG
LV242999-172	10 AWG	16 AWG
LV242999-12	8 AWG	10 AWG
46661	8 AWG	12 AWG
LV242999-122	8 AWG	14 AWG
LV242999-132	8 AWG	16 AWG
45374	8 AWG	6 mm^2
46263	8 AWG	4 mm^2
47227-8-2.5	8 AWG	2.5 mm^2
47227	8 AWG	1.5 mm^2
LV242999-32	8SP	12 AWG
46269	4 AWG	6 AWG
46660	4 AWG	8 AWG
LV242999-192	4 AWG	10 AWG
46662	0 AWG	6 AWG
46665	4 AWG	16 mm^2
46666	4 AWG	10 mm^2
46667	4 AWG	6 mm^2
47227-2-4	2 AWG	4 AWG
47227-0-8	0 AWG	8 AWG
47227-8-10	8 AWG	10 AWG
47227-4-4	4 AWG	4 mm^2

VEAM Part Number	From Wire Size	To Wire Size
45373	0 AWG	2 AWG
LV242999-82	0 AWG	4 AWG
LV242999-92	0 AWG	6 AWG
LV242999-102	0 AWG	8 AWG
46664	0 AWG	16 mm^2
47227-53-20	0 AWG	20 mm^2
45375	0 AWG	25 mm^2
45376	0 AWG	35 mm^2
47227-7025	2/0 AWG	25 mm^2
47227-6-1.5	6 mm^2	1.5 mm^2
47227-6-2.5	6 mm^2	2.5 mm^2
45379	10 mm^2	12 AWG
47227-16-2.5	16 mm^2	2.5 mm^2
47227-16-4	16 mm^2	4 mm^2
47227-16-6	16 mm^2	6 mm^2
47227-16-10	16 mm^2	10 mm^2
47227-25-6	25 mm^2	6 mm^2
47227-25-10	25 mm^2	10 mm^2
47227-25-16	25 mm^2	16 mm^2
47227-50-25	50 mm^2	25 mm^2
47227-95-70	95 mm^2	70 mm^2
47227-150-70	150 mm^2	70 mm^2
47227-150-95	150 mm^2	95 mm^2
46266	50 mm^2	16 mm^2
46264	50 mm^2	35 mm^2

NOTE: Add suffix T9 for silver plating, T12 for gold plating. For other options, consult Customer Service Department.

Contact Hole Plugs

Used to fill a grommet or insert cavity in lieu of a contact to maintain the environmental seal.

Contact Size AWG	Contact Size DIN	Hole Plugs For Grommet	Color	Hole Plugs For Insert	Color
20	10	10-101033-11	Red	46808-20	Red
16S, 16	15, 15S	10-101033-12	Blue	46808-16	Blue
16S, 16 High Density Inserts		10-101033-11	Red	LMB-G-3	Blue
12	25	10-101033-13	Yellow	10-101033-13	Yellow
8	60, 100	10-101033-14	White	10-305045	White
4	160	10-101033-15	Green	10-305045-4	White
0	500	10-101033-16	Black	10-305065-0	Black
0 (Ground)				10-305045-01	White

Specifications and dimensions subject to change
Dimensions shown in mm.

Wire Hole Plugs for F80 and Solder Inserts

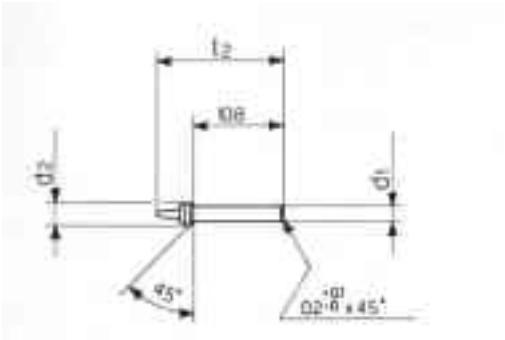

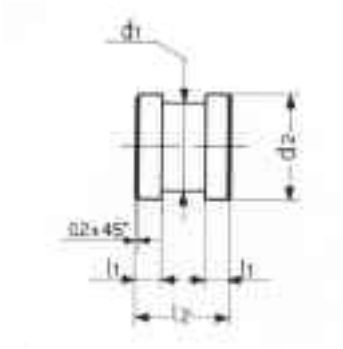

Contact Size	d_1	d_2	l_1	l_2	VEAM P/N
20	1,65	2,6	_	15,2	46808-20
16	2,2	2,6	_	15,7	46808-16
12	3,7	4,6	3,2	11,9	VG 95234 B12
8	6,4	7,6	3,1	11,8	10-305045
4	9,7	10,9	3,1	11,8	10-305045-4
0	13,5	15	4,3	14,3	10-305045-0
DM	14,5	16	4,3	14,3	10-305045-01

Wire Hole Plugs for Grommets

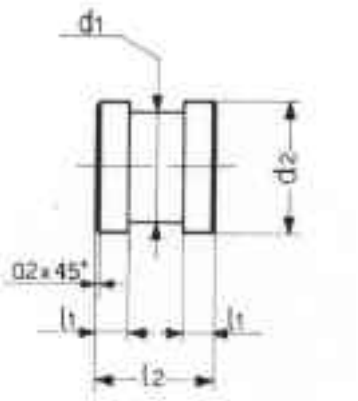

Contact Size		d_1	d_2	l_1	l_2	Color	VG P/N*	VEAM P/N
DIN	AWG	±0,1	±0,2	±0,1	±0,3			
10	—	2,3	3	2,4	9,7	Red	VG 95234 B20	10-101033-11
15S/15	16S/16	2,8	3,7	3,2	11,9	Blue	VG 95234 B16	10-101033-12
25	12	3,7	4,6	3,2	11,9	Yellow	VG 95234 B12	10-101033-13
60/100	8	5	5,8	3,2	11,9	White	VG 95234 B8	10-101033-14
160	4	7,6	8,5	3,2	11,9	Green	VG 95234 B4	10-101033-15
500	0	12,8	13,5	3,2	11,9	Black	VG 95234 B0	10-101033-16

Rear Mounting Data-Maximum Panel Thickness

Dimension D								
	CIR 00/020	CIR 030	GG/D Max. Mated with CIR 30	CIR TB	D MAX*	D MAX	D MAX with rubber C/N 03/030 type	D MAX CIR-TB
10SL	3.7	7.2	4.0	10.0	3.70	7.2	4	10
14S	3.7	7.2	3.5	9.6	3.70	7.2	3.5	9.6
16S	3.7	7.2	N/A	9.6	3.70	7.2	N/A	9.6
16	3.7	7.5	3.5	13.8	3.70	7.5	3.5	13.8
18	3.7	7.5	3.0	13.0	3.70	7.5	3	13
20	3.7	7.5	3.0	13.0	3.70	7.5	3	13
22	3.7	7.5	3.0	13.0	3.70	7.5	3	13
24	5.4	7.5	1.5	11.4	5.25	7.5	1.5	11.4
28	5.4	8.2	2.5	12.4	5.25	8.2	2.5	12.4
32	6.1	7.5	1.0	9.0	6.10	7.5	1	9
36	6.1	7.5	1.0	9.0	6.10	7.5	1	9
40	6.0	7.5	1.0	9.0	6	7.5	1	9

** Dimensions are only valid for rear mounting of the note 1 connectors.*

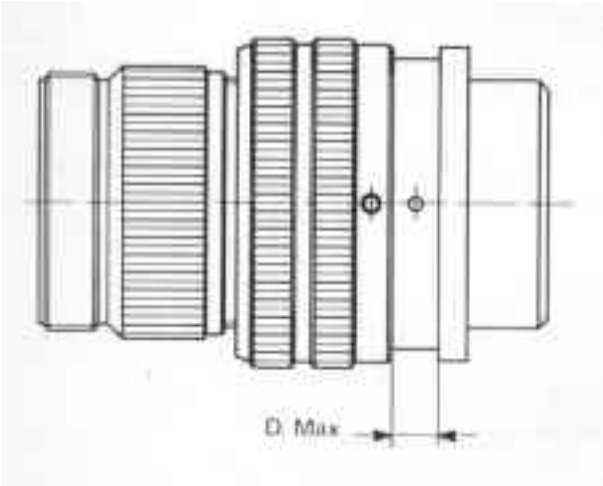

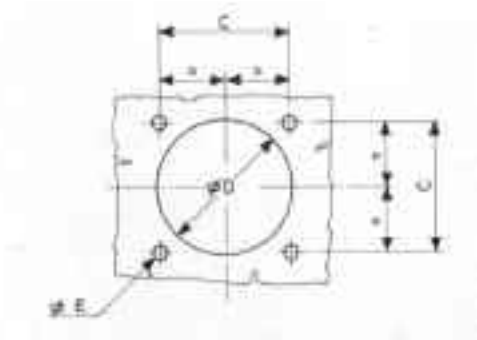

Table 1: Panel cut-out dimensions for CIR-CIRS 02-020 connectors.

Size	10SL	14S	16S/16	18	20	22	24	28	32	36	40
C ±0,1	18.2	23	24.6	27	29.4	31.8	34.9	39.7	44.5	49.2	55.5
Ø D	17	20	23	26.5	30	33	36	42	48.5	55	61
Ø E For Flange with Thru Holes	3.4	3.4	3.4	3.4	3.4	3.4	3.9	3.9	4.5	4.5	4.5
Ø E For Flange with Threaded Holes	4.5	4.5	4.5	4.5	4.5	4.5	5.5	5.5	5.5	5.5	5.5

Table 2: Panel cut-out dimensions for CIR-CIRS 03-030-038 connectors.

Size	10SL	14S	16S/16	18	20	22	24	28	32	36	40
C ±0,1	18.2	23	24.6	27	29.4	31.8	34.9	39.7	44.5	49.2	55.5
Ø D	19.1	25.5	28.3	31.7	35	38.3	41.8	47.6	54.3	60.5	66.4
Ø E For Flange with Thru Holes	3.4	3.4	3.4	3.4	3.4	3.4	3.9	3.9	4.5	4.5	4.5
Ø E For Flange with Threaded Holes	4.5	4.5	4.5	4.5	4.5	4.5	4.5	5.5	5.5	5.5	5.5

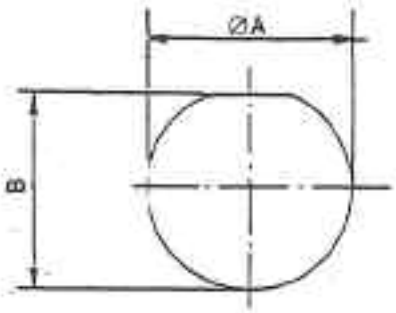

Table 3: Panel cut-out dimensions for CIR-CIRS 07-070-078 connectors.

Size	10SL	14S	16S/16	18	20	22	24	28	32	36	40
ØA $^{+0.25}_{-0}$	22.4	28.75	31.95	35.1	38.3	41.45	44.65	51	57.35	63.7	70.5
B $^{+0}_{-0.35}$	21	27.4	30.95	33.75	36.85	40.05	43.35	49.55	55.95	62.35	68.55

For every flanged receptacle, a choice of mounting hole types exists. These tables identify the prefix part numbers of the types available.

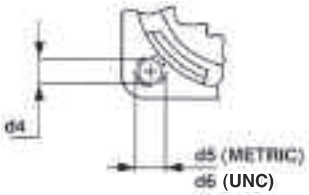

Table 1

Through Mounting Holes

Shell Size	d1 H13 mm	d1 +.004 inches
10SL	3.2	.126
14S	3.2	.126
16S	3.2	.126
16	3.2	.126
18	3.2	.126
20	3.2	.126
22	3.2	.126
24	3.7	.146
28	3.7	.146
32	4.3	.169
36	4.3	.169
40	4.3	.169

Receptacle Identification • CIR030/CIR038/CIRTB

Through mounting holes types	Threaded mounting holes types
CIR 030FP	CIR 030
CIR 030AFP	CIR 030A
CIR 030CFFP	CIR 030CF
CIR 030CFZFP	CIR 030CFZ
CIR 030FFP	CIR 030F
CIR 030GFP	CIR 030G
CIR 030G2FP	CIR 030G2
CIR 030LCFFP	CIR 030LCF
CIR 030LCFZFP	CIR 030LCFZ
CIR 030RFP	CIR 030R
CIR 030RVFP	CIR 030RV
CIR 030SBFP	CIR 030SB
CIR 030YMFP	CIR 030YM
CIR 038FFP	CIR 038F
CIR 038RFP	CIR 030R
CIRTBFP	CIR TB

Table 2

Threaded Mounting Holes

Mounting hole code
CIR030 = metric thread
CIR030UN = US (inch) thread
CIR030FP = thru holes

Shell Size	d6 thread	d5 thread	d4 minor dia.of d5 mm	d4 minor dia.of d5 inches
10SL	8-32UNC	M4	3.2 - 3.4	.126-.134
14S	8-32UNC	M4	3.2 - 3.4	.126-.134
16S	8-32UNC	M4	3.2 - 3.4	.126-.134
16	8-32UNC	M4	3.2 - 3.4	.126-.134
18	8-32UNC	M4	3.2 - 3.4	.126-.134
20	8-32UNC	M4	3.2 - 3.4	.126-.134
22	8-32UNC	M4	3.2 - 3.4	.126-.134
24 CIR030	10-24UNC	M4	4.13-4.33	.126-.134
24 CIR020	10-24UNC	M5	4.13-4.33	.163- .170
28	10-24UNC	M5	4.13-4.33	.163- .170
32	1/4-20UNC	M5	4.13-4.33	.163- .170
36	1/4-20UNC	M5	4.13-4.33	.163- .170
40	1/4-20UNC	M5	4.13-4.33	.163- .170

Receptacle Identification • CIR00/CIR020 - Threaded Holes

Through mounting holes type	Threaded mounting holes type (d5)	Threaded mounting holes types (d6)
CIR 00A	CIR 00AFF	CIR 00AUN
CIR 00CF	CIR 00CFFF	CIR 00CFUN
CIR 00CFZ	CIR 00CFZFF	CIR 00CFZUN
CIR 00F	CIR 00FFF	CIR 00FUN
CIR 00G	CIR 00GFF	CIR 00GUN
CIR 00G2	CIR 00G2FF	CIR 00G2UN
CIR 00LCF	CIR 00LCFFF	CIR 00LCFUN
CIR 00LCFZ	CIR 00LCFZFF	CIR 00LCFZUN
CIR 00LF	CIR 00LFFF	CIR 00LFUN
CIR 00R	CIR 00RFF	CIR 00RUN
CIR 00LR	CIR 00LRFF	CIR 00LRUN
CIR 00RV	CIR 00RVFF	CIR 00RVUN
CIR 00SB	CIR 00SBFF	CIR 00SBUN
CIR 020R	CIR 020RFF	CIR 020RUN
CIR 020YM	CIR 020YMFF	CIR 020YMUN

Countersunk Mounting Holes For UNC Screws

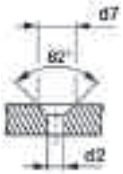

Countersunk Mounting Holes For Metric Screws

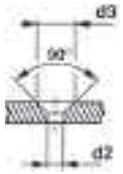

Table 3

Shell Size	d2 H13 mm	d2 inches	d3 mm	d3 inches	d7 mm	d7 inches
10SL	3.2	.126	6.5	.256	6	.248
14S	3.2	.126	6.5	.256	6.3	.248
16S	3.2	.126	6.5	.256	6.3	.248
16	3.2	.126	6.5	.256	6.3	.248
18	3.2	.126	6.5	.256	6.3	.248
20	3.2	.126	6.5	.256	6.3	.248
22	3.2	.126	6.5	.256	6.3	.248
24	3.7	.146	7.5	.295	7.5	.295
28 (90deg.)	3.7	.146	7.5	.295	n/a	n/a
28 (82deg.)	4.2	.165	n/a	n/a	7.3	.287
32	4.3	.169	8	.315	8.6	.339
36	4.3	.169	8.5	.335	8.6	.339
40	4.3	.169	8.5	.335	8.6	.339

Receptacle Identification • CIR00/CIR020 • Chamfered Holes

For use with metric screws (d3) Countersunk mounting holes	For use with UN screws (d7) Countersunk mounting holes
CIR 00AFS	CIR 00AFSM
CIR 00CFFS	CIR 00CFFSM
CIR 00CFZFS	CIR 00CFZFSM
CIR 00FFS	CIR 00FFSM
CIR 00GFS	CIR 00GFSM
CIR 00G2FS	CIR 00G2FSM
CIR 00LCFFS	CIR 00LCFFSM
CIR 00LCFZFS	CIR 00LCFZFSM
CIR 00LFFS	CIR 00LFFSM
CIR 00RFS	CIR 00RFSM
CIR 00LRFS	CIR 00LRFSM
CIR 00RVFS	CIR 00RVFSM
CIR 00SBFS	CIR 00SBFSM
CIR 020RFS	CIR 020RFSM
CIR 020YMFS	CIR 020YMFSM

Specifications and dimensions subject to change
Dimensions shown in mm.

CIR020R/00 Front Mount, Square Flange Receptacle

CIR020R/00

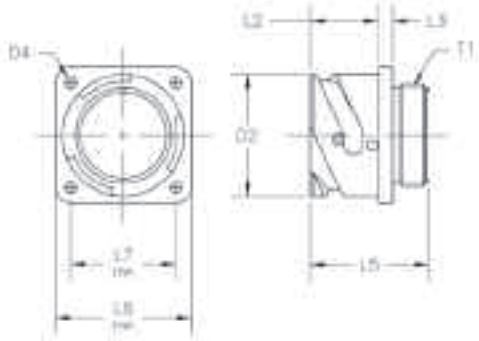

Threaded (rear) to accept accessory hardware. Environment proof when mounted with proper panel sealing gasket.

CIR05 - XX Dummy receptacle same as CIR020R/00 without rear threads. Consult Customer Service Department for part numbers.

Shell Size	D2 Maximum mm / inch	D4 + 0.1 .004 mm / inch	L2 + 0.4 .016 mm / inch	L3 +/- 0.2 .008 mm / inch	L5 +/- 0.3 .012 mm / inch	L6 +/- 0.3 .012 mm / inch	L7 +/- 0.1 .004 mm / inch	T1 Thread
10SL	18.2 .72	3.2 .126	14.2 .559	2.8 .110	24.7 .972	25.4 1.00	18.2 .717	5/8-24UNEF
14S	24.6 .97	3.2 .126	14.2 .559	3.2 .126	24.7 .972	30.0 1.181	23.0 .906	3/4-20UNEF
16S	27.4 1.08	3.2 .126	14.2 .559	3.2 .126	24.7 .972	32.5 1.280	24.6 .969	7/8-20UNEF
16	27.4 1.08	3.2 .126	19.0 .748	3.2 .126	33.8 1.331	32.5 1.280	24.6 .969	7/8-20UNEF
18	30.8 1.21	3.2 .126	19.0 .748	4.0 .157	33.8 1.331	35.0 1.378	27.0 1.063	1.00-20UNEF
20	34.2 1.35	3.2 .126	19.0 .748	4.0 .157	33.8 1.331	38.0 1.496	29.4 1.157	1 1/8-18UNEF
22	37.4 1.47	3.2 .126	19.0 .748	4.0 .157	33.8 1.331	41.0 1.614	31.8 1.252	1 1/4-18UNEF
24	40.9 1.61	3.7 .146	20.6 .811	4.0 .157	35.7 1.406	44.5 1.752	34.9 1.374	1 3/8-18UNEF
28	46.7 1.84	3.7 .146	20.6 .811	4.0 .157	35.7 1.406	50.8 2.000	39.7 1.563	1 5/8-18UNEF
32	53.4 2.10	4.3 .169	22.2 .874	4.0 .157	37.3 1.469	57.0 2.244	44.5 1.752	1 7/8-16UN
36	59.6 2.35	4.3 .169	22.2 .874	4.0 .157	37.3 1.469	63.5 2.500	49.2 1.937	2 1/16-16UN
40	65.5 2.58	4.3 .169	22.2 .874	4.0 .157	37.3 1.469	69.9 2.752	55.5 2.185	2 5/16-16UNS

CIR064PP Panel Plug

Shell Size	D5 + 0.1 .004 mm / inch	D6 Max. mm / inch	L6 +/- 0.4 .016 mm / inch	L7 +/- 0.1 .004 mm / inch	L17 +/- 0.4 .016 mm / inch	L18 +/- 0.2 .008 mm / inch
10SL	3.2 .126	22.8 .90	25.4 1.000	18.2 .717	28.6 1.126	3.2 .126
14S	3.2 .126	31.7 1.25	30.0 1.181	23.0 .906	30.1 1.185	3.2 .126
16S	3.2 .126	35.9 1.41	32.5 1.280	24.6 .969	30.1 1.185	3.2 .126
16	3.2 .126	35.9 1.41	32.5 1.280	24.6 .969	37.5 1.476	4.0 .157
18	3.2 .126	39.5 1.56	35.0 1.378	27.0 1.063	37.5 1.476	4.0 .157
20	3.2 .126	42.9 1.69	38.0 1.496	29.4 1.157	37.7 1.484	4.4 .173
22	3.2 .126	46.1 1.81	41.0 1.614	31.8 1.252	37.3 1.469	4.4 .173
24	3.7 .146	49.5 1.95	44.5 1.752	34.9 1.374	39.0 1.535	4.8 .189
28	3.7 .146	56.9 2.24	50.8 2.000	39.7 1.563	39.0 1.535	4.8 .189
32	4.3 .169	63.7 2.51	57.0 2.244	44.5 1.752	40.5 1.594	4.8 .189
36	4.3 .169	70.1 2.76	63.5 2.500	49.2 1.937	42.1 1.657	6.4 .252
40	5.2 .205	75.7 2.98	69.9 2.752	55.5 2.185	44.5 1.752	6.4 .252

CIR064PP

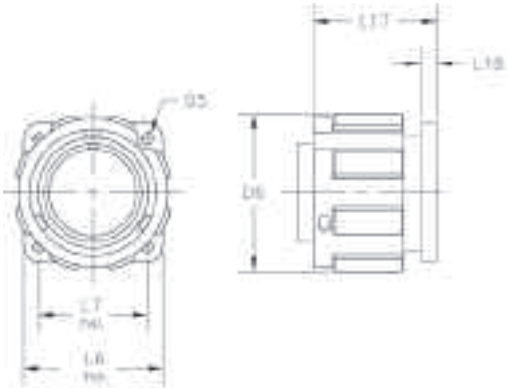

Square flange mounting with four through holes. Environment proof with proper sealing gasket.

Type FR- Flame retardant: 55 shore. *Consult Factory*
Type N - Neoprene: 80 shore. *Consult Factory*
Type S - Silicone: 75 shore. *Consult Factory*
Type NS - Silicone Black Conductive. *Consult Factory*
Thickness - 0.5 ±0.2

Type F - Viton*: 80 shore. *Consult Factory*
Thickness - 0.8 ± 0.2 mm

Type SC - Silicone, black, conductive,
nickel graphite filler.
Tin plated for RFI shielding.
Thickness - 0.5 ± 0.2 mm.

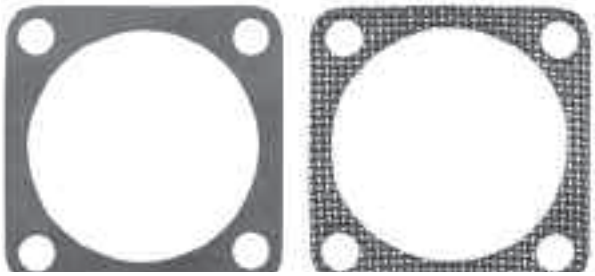

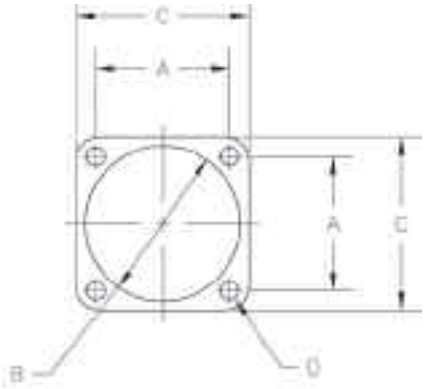

Size	A +/- 0.2 mm	.008 inch	B rear mount + 0.4 mm	.016 inch	B front mount + 0.4 mm	.016 inch	C +/- 0.5 mm	.020 inch	D + +0.5 mm	.040 inch
10SL	18.2	.716	18.2	.716	15.7	.625	25.4	1.000	4.2	.165
14S	23.0	.905	24.6	.968	22.1	.874	30.0	1.181	4.2	.165
16S	24.6	.968	27.4	1.079	25.3	1.000	32.5	1.279	4.2	.165
16	24.6	.968	27.4	1.079	25.3	1.000	32.5	1.279	4.2	.165
18	27.0	1.063	30.8	1.212	28.4	1.126	35.0	1.378	4.2	.165
20	29.4	1.157	34.2	1.346	31.6	1.248	38.0	1.496	4.2	.165
22	31.8	1.252	37.4	1.472	34.8	1.374	41.0	1.614	4.2	.165
24	34.9	1.374	40.9	1.610	38	1.500	44.5	1.752	4.2	.165
28	39.7	1.563	46.7	1.838	44.3	1.750	50.8	2.000	5.2	.204
32	44.5	1.752	53.4	2.102	50.7	1.996	57.0	2.244	5.2	.204
36	49.2	1.937	59.6	2.346	57	2.188	63.5	2.500	5.2	.204
40	55.6	2.189	65.7	2.586	61.9	2.437	69.9	2.752	5.2	.204

Operating Temperature

-55° C. to 125° C. - Neoprene
-55° C. to 200° C. - Silicone
-25° C. to 200° C. - Viton*
-40° C. to 125° C. - Flame Retardant.

* Trademark-Dupont

	REAR PANEL MOUNT 030						FRONT PANEL MOUNT CIR00 CIR020					
Shell Size	Type N	Type NS	Type SC	Type S	Type F	Type FR	Type N	Type NS	Type SC	Type S	Type F	Type FR
10SL	46739-10	46739-10/1	46739-10/2C	46739-10/2	46739-10/3	46739-10/FR	16950	16950/1	16950/2C	16950/2	16950/3	16950/FR
14S	46739-14	46739-14/1	46739-14/2C	46739-14/2	46739-14/3	46739-14/FR	16952	16952/1	16952/2C	16952/2	16952/3	16952/FR
16S	46739-16	46739-16/1	46739-16/2C	46739-16/2	46739-16/3	46739-16/FR	16953	16953/1	16953/2C	16953/2	16953/3	16953/FR
16	46739-16	46739-16/1	46739-16/2C	46739-16/2	46739-16/3	46739-16/FR	16953	16953/1	16953/2C	16953/2	16953/3	16953/FR
18	46739-18	46739-18/1	46739-18/2C	46739-18/2	46739-18/3	46739-18/FR	16954	16954/1	16954/2C	16954/2	16954/3	16954/FR
20	46739-20	46739-20/1	46739-20/2C	46739-20/2	46739-20/3	46739-20/FR	16955	16955/1	16955/2C	16955/2	16955/3	16955/FR
22	46739-22	46739-22/1	46739-22/2C	46739-22/2	46739-22/3	46739-22/FR	16956	16956/1	16956/2C	16956/2	16956/3	16956/FR
24	46739-24	46739-24/1	46739-24/2C	46739-24/2	46739-24/3	46739-24/FR	16957	16957/1	16957/2C	16957/2	16957/3	16957/FR
28	46739-28	46739-28/1	46739-28/2C	46739-28/2	46739-28/3	46739-28/FR	16958	16958/1	16958/2C	16958/2	16958/3	16958/FR
32	46739-32	46739-32/1	46739-32/2C	46739-32/2	46739-32/3	46739-32/FR	16959	16959/1	16959/2C	16959/2	16959/3	16959/FR
36	46739-36	46739-36/1	46739-36/2C	46739-36/2	46739-36/3	46739-36/FR	16960	16960/1	16960/2C	16960/2	16960/3	16960/FR
40	46739-40	46739-40/1	46739-40/2C	46739-40/2	46739-40/3	46739-40/FR	16968	16968/1	16968/2C	16968/2	16968/3	16968/FR

Specifications and dimensions subject to change
Dimensions shown in mm.

Cable Clamp
MS 3057-XXA

Concentric cable clamps. They insure strain relief and central location of the cable. Can be used with bushing MS 3420.

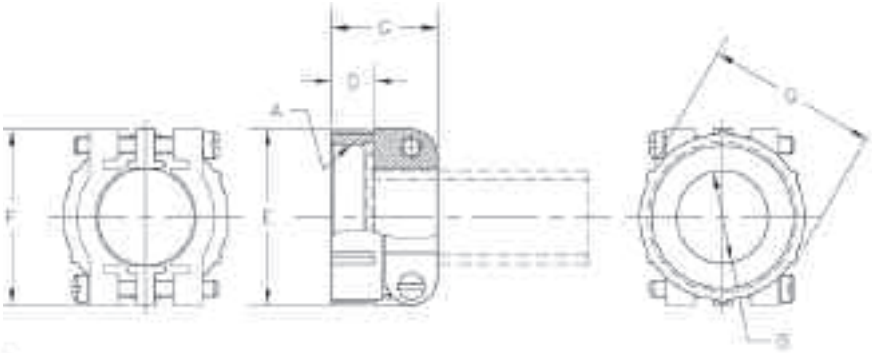

"A" Style Clamp With Bushing

MS 3057-XXA

Shell Size	Clamp Part Number	A thread class 2B (inches)	B dia. mm / inch	D mm / inch	G mm / inch	E-F-Q mm / inch	Used With Bushing Part Number
10SL	MS3057-4A	.625-24UNEF	8.0 .32	10.5 .41	20.6 .81	22.0 .87	MS3420-4
14S	MS3057-6A	.750-20UNEF	11.0 .43	10.5 .41	22.2 .87	27.0 1.06	MS3420-6
16S & 16	MS3057-8A	.875-20UNEF	14.2 .56	10.5 .41	24.0 .95	28.0 1.10	MS3420-8
18	MS3057-10A	1.000-20UNEF	15.8 .62	10.5 .41	28.5 1.12	33.0 1.30	MS3420-10
20 & 22	MS3057-12A	1.187-18UNEF	19.0 .75	10.5 .41	24.0 .95	35.0 1.38	MS3420-12
24 & 28	MS3057-16A	1.437-18UNEF	23.8 .94	10.5 .41	26.0 1.02	43.0 1.69	MS3420-16
32	MS3057-20A	1.750-18UNS	31.7 1.25	12.5 .49	28.0 1.10	51.0 2.01	MS3420-20
36	MS3057-24A	2.000-18UNS	35.0 1.38	14.0 .55	29.4 1.16	58.0 2.28	MS3420-24
40	MS3057-28A	2.250-16UN	41.2 1.62	14.0 .55	42.8 1.68	65.0 2.56	MS3420-28

Bushing
MS 3420 - XX

Bushing of synthetic rubber to be used with cable clamps MS 3057 A for protection of the cable or wires. These bushings can be telescoped for smaller cable diameters.

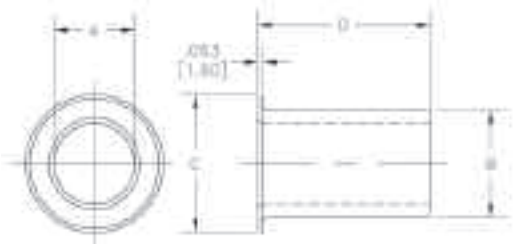

Bushing

MS 3420-XX

Bushing Part Number	Used With Cable Clamp	A dia.	B dia.	C dia.	D
MS3420-4	MS3057-4A	5.58 .220	7.7 .30	12.8 .50	69.8 2.75
MS3420-6	MS3057-6A	7.92 .312	10.8 .43	15.7 .62	66.8 2.63
MS3420-8	MS3057-8A	11.09 .437	14.0 .55	18.8 .74	63.5 2.50
MS3420-10	MS3057-10A	14.27 .562	15.6 .61	22.6 .89	60.3 2.37
MS3420-12	MS3057-12A	15.87 .625	18.8 .74	27.5 1.08	57.1 2.25
MS3420-16	MS3057-16A	19.05 .750	23.5 .93	33.3 1.31	53.9 2.12
MS3420-20	MS3057-20A	23.79 .937	31.5 1.24	40.5 1.59	50.8 2.00
MS3420-24	MS3057-24A	31.75 1.250	34.7 1.37	46.9 1.85	47.6 1.87
MS3420-28	MS3057-28A	34.92 1.374	41.0 1.61	52.9 2.08	44.4 1.75

Waterproof clamp for jacketed cables. Provides mechanical strain relief plus concentric clamping over a wide range of cable sizes.

A rubber gland seal ensures a waterproof seal on the cable jacket.

Note: Other materials available.

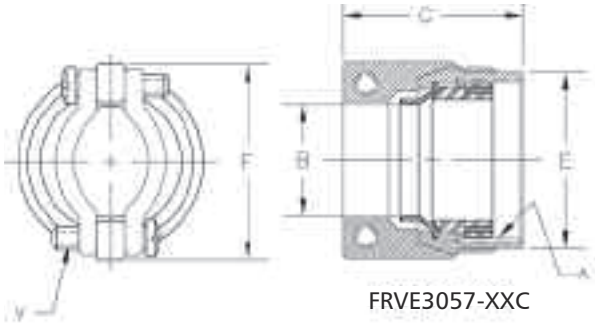

FRVE3057-XXC

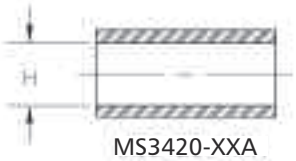

MS3420-XXA

Shell Size	Clamp Part Number	A thread class 2B (inches)	B (Approx.) open mm / inch	B (Approx.) closed mm / inch	E +/- 0.4 mm	E +/- .016 inch	F +/- 0.2 mm	F +/- .008 inch	G + 0.5 mm	G + .020 inch	V thread class 2A (inches)	Bushing Part Number	H open mm	H open inch
10SL	FRVE3057-4C	.625-24UNEF	7.93	2.38	19.0		22.6		32.3		6-32UNC	MS3420-4A	5.56	
			.312	.094		.748		.890		1.272				.219
14S	FRVE3057-6C	.750-20UNEF	11.13	6.35	25.8		25.8		32.3		6-32UNC	MS3420-6A	7.93	
			.438	.25		1.016		1.016		1.272				.312
												MS3420-4A	5.56	
														.219
16S&16	FRVE3057-8C	.875-20UNEF	13.48	8	25.4		28.1		32.3		6-32UNC	MS3420-8A	11.10	
			.531	.315		1.000		1.106		1.106				.437
												MS3420-6A	7.93	
														.312
18	FRVE3057-10C	1.000-20UNEF	15.87	9.6	28.5		31		35.3		6-32UNC	MS3420-10A	11.10	
			.625	.375		1.122		1.220		1.390				.437
												MS3420-6A	7.93	
														.312
20&22	FRVE3057-12C	1.187-18UNEF	19	11.3	33.3		37.3		35.7		8-32UNC	MS3420-12A	13.74	
			.748	.445		1.311		1.468		1.405				.541
												MS3420-8A	11.10	
														.437
24&28	FRVE3057-16C	1.437-18UNEF	23.8	15.5	39.6		42.0		38.5		8-32UNC	MS3420-16A	19.00	
			.938	.610		1.559		1.653		1.516				.748
												MS3420-12A	13.74	
														.541
												MS3420-8A	11.10	
														.437
32	FRVE3057-20C	1.750-18UNS	31.75	23.4	47.6		54.0		44.8		.250-20UNC	MS3420-20A	23.80	
			1.250	.921		1.874		2.126		1.764				.937
												MS3420-16A	19.00	
														.748
												MS3420-12A	13.74	
														.541
36	FRVE3057-24C	2.000-18UNS	35	23.4	53.9		57.1		51.6		.250-20UNC	MS3420-24A	28.5	
			1.378	9.21		2.122		2.248		2.031				1.122
												MS3420-20A	23.80	
														.937
												MS3420-16A	19.00	
														.748
40	FRVE3057-28C	2.250-16UN	41.25	29.9	60.3		63.5		51.6		.250-20UNC	MS3420-28A	31.75	
			1.625	1.177		2.374		2.500		2.031				1.25
												MS3420-20A	23.80	
														.937
												MS3420-16A	19.00	
														.748
44	FRVE3057-32C	2.500-16UN	47.63	34.9	66.6		71.4		55.6		.250-20UNC	MS3420-32A	41.27	
			1.875	1.374		2.622		2.811		2.189				1.625
												MS3420-28A	31.75	
														1.250

"C" Style Clamp With Gland

Cable Clamp FRVE-3057-XXC

For "C" Style Clamp Bushing

Bushing MS3420-XXA

Specifications and dimensions subject to change
Dimensions shown in mm.

CIRTF

CIRTV

Protective metal caps which seal the front of plugs or receptacles. Include a chain for retention of the cap at the required location. Other methods of attachment are available.

CIRTF

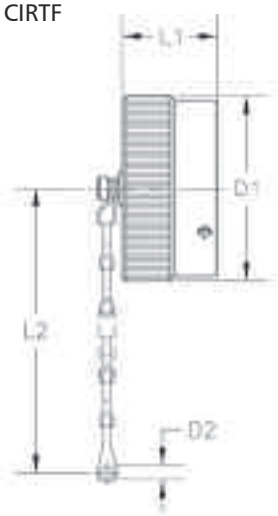

CIRTV

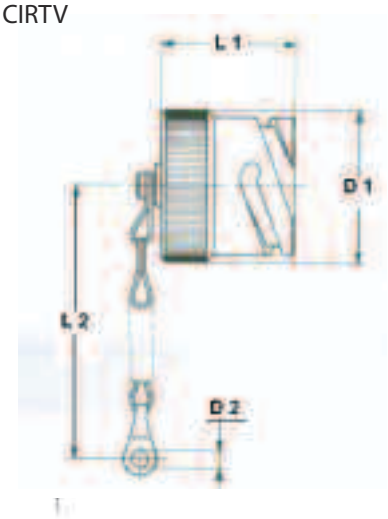

TF Caps (for receptacles CIR00, 01, 020, 030, 05, 070, 1B)

VEAM Part Number	D1 Maximum mm /inch	D2 mm+0.5 inch+.020 mm-0.25 inch -.010	L1 Maximum	L2 Approximate mm /inch
CIR10SLTF	23.5 .93	4.4 .173	16.5 .65	127.0 5.00
CIR14STF	30.5 1.20	4.4 .173	16.5 .65	127.0 5.00
CIR16STF	33.0 1.30	4.4 .173	16.5 .65	127.0 5.00
CIR16TF	33.0 1.30	4.4 .173	21.0 .83	127.0 5.00
CIR18TF	37.5 1.48	4.4 .173	21.0 .83	127.0 5.00
CIR20TF	41.0 1.61	4.4 .173	21.0 .83	127.0 5.00
CIR22TF	44.0 1.73	4.4 .173	21.0 .83	127.0 5.00
CIR24TF	47.5 1.87	4.4 .173	21.0 .83	127.0 5.00
CIR28TF	54.5 2.15	5.6 .220	21.0 .83	190.0 7.48
CIR32TF	61.0 2.40	5.6 .220	21.0 .83	190.0 7.48
CIR36TF	67.5 2.66	5.6 .220	21.0 .83	175.0 6.89
CIR40TF	73.0 2.87	5.6 .220	21.0 .83	190.0 7.48

TV Caps (for plugs CIR06, 08)

VEAM Part Number	D1 Maximum mm / inch	D2 mm+0.5 inch+.020 mm-0.25 inch -.010	L1 Maximum mm / inch	L2 Approximate mm / inch
CIR10SLTV	21.0 .83	4.4 .173	24.0 .94	127.0 5.0
CIR14STV	27.5 1.08	4.4 .173	24.0 .94	127.0 5.0
CIR16STV	30.0 1.18	4.4 .173	24.0 .94	127.0 5.0
CIR16TV	30.0 1.18	4.4 .173	32.0 1.26	127.0 5.0
CIR18TV	33.5 1.32	4.4 .173	32.0 1.26	127.0 5.0
CIR20TV	37.0 1.45	4.8 .189	32.0 1.26	140.0 5.5
CIR22TV	40.0 1.57	4.8 .189	32.0 1.26	140.0 5.5
CIR24TV	43.5 1.71	4.8 .189	32.0 1.26	140.0 5.5
CIR28TV	49.5 1.95	4.8 .189	32.0 1.26	190.0 7.5
CIR32TV	56.0 2.20	5.6 .220	32.0 1.26	190.0 7.5
CIR36TV	62.5 2.46	5.6 .220	32.0 1.26	190.0 7.5
CIR40TV	67.7 2.66	5.6 .220	32.0 1.26	190.0 7.5

Protective Plastic Caps

Protective vinyl caps are available upon request to guard against entry of moisture, dirt and other foreign matter to the contact area during shipment.

Shell Size	For Receptacles CIR 00, 01, 020, 030, 070, TB	For Plugs CIR 06, 08	For Plugs CIR 06GG, 08GG	For Plugs CIR 065	For Plugs CIR 064
	Part Number	Part Number	Part Number	Part Number	Part Number
10SL	#27	#35	#45	#35	#35
14S	#41	#42	#51	#51	#45
16S	#42	#45	#55	#51	#48
16	#42	#45	#55	#51	#48
18	#45	#51	#57	#53	#53
20	#51	#55	#57	#56	#56
22	#53	#56	#65	#57	#57
24	#56	#57	#65	#58	#58
28	#58	#65	#71	#66	#66
32	#66	#71	#76	#76	#75
36	#71	#76	#81	#78	#78
40	#76	#81	#82	#81	#81

Specifications and dimensions subject to change
Dimensions shown in mm.

Contact Size	Wire Size (AWG)	VEAM Contact Number	Insertion Tool	Removal Tool Kit	Removal Tool Kit Replacement Parts Handle	Tips	Guide Pins
20P	20	46730-20P	T98143	11-7576-101	0148B	46592M-VPT	---
20S	20	46731	T98143	11-7576-101	0148B	46592M-101S	27977-20T50
18P	18	46740P	T98143	11-7576-37	0148B	46592M-37PT50	---
18S	18	46740S	T98143	11-7576-37	0148B	46592M-37ST50	27977-20T50
18P	20-22	46740-15P	T98143	11-7576-37	0148B	46592M-37PT50	---
18S	20-22	46740-15S	T98143	11-7576-37	0148B	46592M-37ST50	27977-20T50
18P	16	46740-22P	11-7345	11-7576-37	0148B	46592M-37PT50	---
18S	16	46740-22S	11-7345	11-7576-37	0148B	46592M-37ST50	27977-20T50
16S P	16	27911	11-7345	A43240	0148B	2-3697	---
16S S	16	27961	11-7345	A43240	0148B	2-3698	27977-16T50
16S P	20-24	27911-13	11-7345	A43240	0148B	2-3697	---
16S S	20-24	27961-13	11-7345	A43240	0148B	2-3698	27977-16T50
16S P	20	27911-15	T98143	A43240	0148B	2-3697	---
16S S	20	27961-15	T98143	A43240	0148B	2-3698	27977-16T50
16S P	14-16	27911-20	11-7345	A43240	0148B	2-3697	---
16S S	14-16	27961-20	11-7345	A43240	0148B	2-3698	27977-16T50
16S P	12-14	27911-26	46736	A43240	0148B	2-3697	---
16S S	12-14	27961-26	46736	A43240	0148B	2-3698	27977-16T50
16P	16	27913	11-7345	A43240	0148B	2-3697	---
16S	16	27963	11-7345	A43240	0148B	2-3698	27977-16T50
16P	24-26	27913-08	11-7345	A43240	0148B	2-3697	---
16S	24-26	27963-08	11-7345	A43240	0148B	2-3698	27977-16T50
16P	20-22	27913-12	T98143	A43240	0148B	2-3697	---
16S	20-22	27963-12	T98143	A43240	0148B	2-3698	27977-16T50
16P	20-22	27913-13	T98143	A43240	0148B	2-3697	---
16S	20-22	27963-13	T98143	A43240	0148B	2-3698	27977-16T50
16P	18-20	27913-15	11-7345	A43240	0148B	2-3697	---
16S	18-20	27963-15	11-7345	A43240	0148B	2-3698	27977-16T50
16P	14-16	27913-20	11-7345	A43240	0148B	2-3697	---
16S	14-16	27963-20	11-7345	A43240	0148B	2-3698	27977-16T50
16P	12-14	27913-26	46736	A43240	0148B	2-3697	---
16S	12-14	27963-26	46736	A43240	0148B	2-3698	27977-16T50
12P	8	27914-8	46736-6	A43240	0148B	2-3696	---
12S	8	27964-8	46736-6	A43240	0148B	2-3698	27977-12T50
12P	20-24	27914-12	46736	A43240	0148B	2-3696	---
12S	20-24	27964-12	46736	A43240	0148B	2-3698	27977-12T50
12P	14-18	27914-20	46736	A43240	0148B	2-3696	---
12S	14-18	27964-20	46736	A43240	0148B	2-3698	27977-12T50
12P	2.5mm	27914-22	46736	A43240	0148B	2-3696	---
12S	2.5mm	27964-22	46736	A43240	0148B	2-3698	27977-12T50
12P	12	27914-26	46736	A43240	0148B	2-3696	---
12S	12	27964-26	46736	A43240	0148B	2-3698	27977-12T50
12P	4 mm sq.	27914-30	46736	A43240	0148B	2-3696	---
12S	4 mm sq.	27964-30	46736	A43240	0148B	2-3698	27977-12T50
12P	10	27914-38	46736-6	A43240	0148B	2-3696	---
12S	10	27964-38	46736-6	A43240	0148B	2-3698	27977-12T50
8P	8	27915	A46151-8T50	A43240-8	0148B	2-8252	Not Required
8S	8	27935	A46151-8T50	A43240-8	0148B	2-8251	Not Required
8P	12-14	27915-26-62	A46151-8T50	A43240-8	0148B	2-8252	Not Required
8S	12-14	27935-26-62	A46151-8T50	A43240-8	0148B	2-8251	Not Required
8P	12-14	27915-26	A46151-8T50	A43240-8	0148B	2-8252	Not Required
8S	12-14	27935-26	A46151-8T50	A43240-8	0148B	2-8251	Not Required
8P	4 mm sq.	27915-30	A46151-8T50	A43240-8	0148B	2-8252	Not Required
8S	4 mm sq.	27935-30	A46151-8T50	A43240-8	0148B	2-8251	Not Required

Assembly manual available upon request.

Insertion Tools

Guide Pins

A43240
Removal Kit

⚠ WARNING

Tooling & Handling: Care must be taken to avoid damage to any component parts of electrical connectors during installation and use. Although there are normally no sharp edges, care must be taken when handling certain components to avoid injury to fingers. Electrical connectors may be damaged in transit to the customers, and damage may result in creation of hazards. Products should therefore be examined prior to installation/use and rejected if found to be damaged.

Insertion Tools

Guide Pins

A43240
Removal Kit

Contact Size	Wire Size (AWG)	VEAM Contact Number	Insertion Tool	Removal Tool Kit	Removal Tool Kit Replacement Parts Handle	Tips	Guide Pins
8P	10	27915-38	A46151-8T50	A43240-8	0148B-8	2-8252	Not Required
8S	10	27935-38	A46151-8T50	A43240-8	0148B-8	2-8251	Not Required
8P	6	27915-58	A46151-8T50	A43240-8	0148B-8	2-8252	Not Required
8S	6	27935-58	A46151-8T50	A43240-8	0148B-8	2-8251	Not Required
4P	4-6	27916	A46151-4T50*	46150-4	46150	11-7370-4	Not Required
4S	4-6	27936	A46151-4T50*	46150-4	46150	11-7674-2	Not Required
4P	2.5mm sq.	27916-22	A46151-4T50*	46150-4	46150	11-7370-4	Not Required
4S	2.5mm sq.	27936-22	A46151-4T50*	46150-4	46150	11-7674-2	Not Required
4P	16mm sq.	27916-62	A46151-4T50*	46150-4	46150	11-7370-4	Not Required
4S	16mm sq.	27936-62	A46151-4T50*	46150-4	46150	11-7674-2	Not Required
0P	0	27917V	A46151-0T50*	46150-0	46150	11-7370-5	Not Required
0S	0	27937V	A46151-0T50*	46150-0	46150	11-7674-3	Not Required
0P	8	27917-45	A46151-0T50*	46150-0	46150	11-7370-5	Not Required
0S	8	27937-45	A46151-0T50*	46150-0	46150	11-7674-3	Not Required
0P	10mm sq.	27917-50	A46151-0T50*	46150-0	46150	11-7370-5	Not Required
0S	10mm sq.	27937-50	A46151-0T50*	46150-0	46150	11-7674-3	Not Required
0P	16mm sq.	27917-62	A46151-0T50*	46150-0	46150	11-7370-5	Not Required
0S	16mm sq.	27937-62	A46151-0T50*	46150-0	46150	11-7674-3	Not Required
0P	25mm sq.	27917-78	A46151-0T50*	46150-0	46150	11-7370-5	Not Required
0S	25mm sq.	27937-78	A46151-0T50*	46150-0	46150	11-7674-3	Not Required
0P	35mm sq.	27917-90	A46151-0T50*	46150-0	46150	11-7370-5	Not Required
0S	35mm sq.	27937-90	A46151-0T50*	46150-0	46150	11-7674-3	Not Required
0P	50mm sq.	27917-107	A46151-0T50*	46150-0	46150	11-7370-5	Not Required
0S	50mm sq.	27937-107	A46151-0T50*	46150-0	46150	11-7674-3	Not Required
0P	4	46646-0	A46151-0T50*	46150-0	46150	11-7370-5	Not Required
0S	4	47647-0	A46151-0T50*	46150-0	46150	11-7674-3	Not Required
4/0 P	2	47107-90	Not Required	Not Required	Not Required	Not Required	Not Required
4/0 S	2	47114-90	Not Required	Not Required	Not Required	Not Required	Not Required
4/0 P	0 (1/0)	47107-115	Not Required	Not Required	Not Required	Not Required	Not Required
4/0 S	0 (1/0)	47114-115	Not Required	Not Required	Not Required	Not Required	Not Required
4/0 P	2/0	47107-135	Not Required	Not Required	Not Required	Not Required	Not Required
4/0 S	2/0	47114-135	Not Required	Not Required	Not Required	Not Required	Not Required
4/0 P	70mm sq.	47107-144	Not Required	Not Required	Not Required	Not Required	Not Required
4/0 S	70mm sq.	47114-144	Not Required	Not Required	Not Required	Not Required	Not Required
4/0 P	95mm sq.	47107-155	Not Required	Not Required	Not Required	Not Required	Not Required
4/0 S	95mm sq.	47114-155	Not Required	Not Required	Not Required	Not Required	Not Required
4/0 P	4/0	47107-165	Not Required	Not Required	Not Required	Not Required	Not Required
4/0 S	4/0	47114-165	Not Required	Not Required	Not Required	Not Required	Not Required

*For solder contacts use TIP P/N SD46151-4T50 and SD46151-0T50.

Assembly manual available upon request.

⚠ WARNING

Tooling & Handling: Care must be taken to avoid damage to any component parts of electrical connectors during installation and use. Although there are normally no sharp edges, care must be taken when handling certain components to avoid injury to fingers. Electrical connectors may be damaged in transit to the customers, and damage may result in creation of hazards. Products should therefore be examined prior to installation/use and rejected if found to be damaged.

Specifications and dimensions subject to change
Dimensions shown in mm.

TENSILE STRENGTH AND MILLIVOLT DROP MEASUREMENTS MEET THE REQUIREMENTS OF MIL- C-39029, MIL-C-22520, MIL-T-7928 AS APPLICABLE.

Pneumatic Power Crimping Tool
Model 400B HD

This lightweight (16 lbs.) crimping tool will crimp pin and socket contacts as well as solderless terminals. Non-adjustable dies are available to accommodate wires ranging from 16AWG through 4AWG.The four-indent crimp jaws provide a perfect gas tight crimp every time, maximizing wire-contact pull-out forces. Locators are available for every CIR series contact.

The Model 400B HD Power Crimp Tool is excellent for high production runs of small gauge contacts.

Operating Air pressure: 100-120 PS Size: 4" O.D. x 12 3/4" Long
Bench mounting version is standard. Foot pedal # 104 available.
For large contacts and terminals use our Model 500D Tool.

This tool is available from Pico Corporation
Phone: (805) 388-5510
Fax: (805) 482-4038

Pneumatic Power Crimping Tool
Model 500D

This power crimping tool will handle pin and socket contacts plus lug terminals (insulated or non-insulated) in all sizes ranging from 8AWG to 250 MCM.
Bench mounting version is standard. Foot pedal #105 available.

Consult our factory for foot pedal accessories.

Shipping weight: 45 lbs. approximate.

Operating Air pressure: 100-120 PSI.

This tool is available from Pico Corporation
Phone: (805) 388-5510
Fax: (805) 482-4038

⚠ WARNING

Tooling & Handling: Care must be taken to avoid damage to any component parts of electrical connectors during installation and use. Although there are normally no sharp edges, care must be taken when handling certain components to avoid injury to fingers. Electrical connectors may be damaged in transit to the customers, and damage may result in creation of hazards. Products should therefore be examined prior to installation/use and rejected if found to be damaged.

Turret

AF8 Manual CrimpTool

Contact Size	Wire Size AWG	VEAM Contact Number	AF8 Hand Tool	Model 400 BHD Pneumatic		Model 500 D Pneumatic	
			Turret	Die Part Number	Locator Part Number	Die Part Number	Locator Part Number
20P	20	46730-20P	616266	---	---	---	---
20S	20	46731	616266	---	---	---	---
18P	18	46740P	TH485	---	---	---	---
18S	18	46740S	TH485	---	---	---	---
18P	20-22	46740-15P	TH485	---	---	---	---
18S	20-22	46740-15S	TH485	---	---	---	---
18P	16	46740-22P	TH485	---	---	---	---
18S	16	46740-22S	TH485	---	---	---	---
16S P	16	27911	616266	414DA-16N	4314-2	---	---
16S S	16	27961	616266	414DA-16N	4314-1	---	---
16S P	20-24	27911-13	616266	---	---	---	---
16S S	20-24	27961-13	616266	---	---	---	---
16S P	20	27911-15	616266	414DA-16N	4314-2	---	---
16S S	20	27961-15	616266	414DA-16N	4314-1	---	---
16S P	14-16	27911-20	616266	414DA-12N or 16N	4314-2	---	---
16S S	14-16	27961-20	616266	414DA-12N or 16N	4314-1	---	---
16S P	12-14	27911-26	616266	414DA-12N	4314-1	---	---
16S S	12-14	27961-26	616266	414DA-12N	4314-2	---	---
16P	16	27913	616266	414DA-16N	4332	---	---
16S	16	27963	616266	414DA-16N	4333	---	---
16P	24-26	27913-08	616266	---	---	---	---
16S	24-26	27963-08	616266	---	---	---	---
16P	20-22	27913-12	616266	---	---	---	---
16S	20-22	27963-12	616266	---	---	---	---
16P	20-24	27913-13	616266	---	---	---	---
16S	20-24	27963-13	616266	---	---	---	---
16P	18-20	27913-15	616266	414DA-16N	4332	---	---
16S	18-20	27963-15	616266	414DA-16N	4333	---	---
16P	14-16	27913-20	616266	414DA-12N or 16N	4332	---	---
16S	14-16	27963-20	616266	414DA-12N or 16N	4333	---	---
16P	12-14	27913-26	616266	414DA-12N	4332	---	---
16S	12-14	27963-26	616266	414DA-12N	4333	---	---
12P	8	27914-8	---	414DA-8HEX or 8N	4330M	---	---
12S	8	27964-8	---	414DA-8HEX or 8N	4331M	---	---
12P	20-22	27914-12	616266	---	---	---	---
12S	20-22	27964-12	616266	---	---	---	---
12P	14-18	27914-20	616266	414DA-10N	4330	---	---
12S	14-18	27964-20	616266	414DA-10N	4331	---	---
12P	2.5mm sq.	27914-22	616266	414DA-10N	4330	---	---
12S	2.5mm sq.	27964-22	616266	414DA-10N	4331	---	---
12P	12	27914-26	616266	414DA-12N OR 10N	4330	---	---
12S	12	27964-26	616266	414DA-12N OR 10N	4331	---	---
12P	4mm sq.	27914-30	---	414DA-10N	4330	---	---
12S	4mm sq.	27964-30	---	414DA-10N	4331	---	---
12P	10	27914-38	---	414DA-10N	4330	---	---
12S	10	27964-38	---	414DA-10N	4331	---	---
8P	8	27915	---	414DA8HEX or 8N	4329	514DA-8 HEX	5404
8S	8	27935	---	414DA8HEX or 8N	4329	514DA-8 HEX	5404
8P	12-14	27915-26-62	---	414DA-8N	4329	514DA-8 HEX	5404
8S	12-14	27935-26-62	---	414DA-8N	4329	514DA-8 HEX	5404
8P	12-14	27915-26	---	414DA-10N	4329	---	---
8S	12-14	27935-26	---	414DA-10N	4329	---	---

⚠ WARNING

Tooling & Handling: Care must be taken to avoid damage to any component parts of electrical connectors during installation and use. Although there are normally no sharp edges, care must be taken when handling certain components to avoid injury to fingers. Electrical connectors may be damaged in transit to the customers, and damage may result in creation of hazards. Products should therefore be examined prior to installation/use and rejected if found to be damaged.

Specifications and dimensions subject to change
Dimensions shown in mm.

Contact Size	Wire Size AWG	VEAM Contact Number	AF8 Hand Tool	Model 400 BHD Pneumatic		Pneumatic Model 500 D	
			Turret	Die Part Number	Locator Part Number	Die Part Number	Locator Part Number
8P	4mm sq.	27915-30	---	414DA-10N	4329	---	---
8S	4mm sq.	27935-30	---	414DA-10N	4329	---	---
8P	10	27915-38	---	414DA-10N	4329	---	---
8S	10	27935-38	---	414DA-10N	4329	---	---
8P	6	27915-58	---	414DA-8 HEX	4329	514DA-8 HEX	5497
8S	6	27935-58	---	414DA-8 HEX	4329	514DA-8 HEX	5497
4P	4 AWG 6 AWG	27916	---	414DA-4 HEX 414DA-8N or 8 HEX	4043	514DA-4 HEX 514DA-8N or HEX	5497
4S	4 AWG 6 AWG	27936	---	414DA-4 HEX 414DA-8N or 8 HEX	4043	514DA-4 HEX 514DA-8N or HEX	5497
4P	2.5mm sq	27916-22	---	414DA-12N	4043	---	---
4S	2.5mm sq	27936-22	---	414DA-12N	4043	---	---
4P	16mm sq.	27916-62	---	414DA-4 HEX	4043	514DA-4 HEX	5497
4S	16mm sq.	27936-62	---	414DA-4 HEX	4043	514DA-4 HEX	5497
0P	0	27917V	---	---	---	514DA-0 HEX	5442
0S	0	27937V	---	---	---	514DA-0 HEX	5441
0P	8	27917-45	---	---	---	514DA-0/8 HEX	5442
0S	8	27937-45	---	---	---	514DA-0/8 HEX	5441
0P	10mm sq	27917-50	---	---	---	514DA-0/8 HEX	5442
0S	10mm sq	27937-50	---	---	---	514DA-0/8 HEX	5441
0P	16mm sq	27917-62	---	---	---	514DA-4 HEX	5442
0S	16mm sq	27937-62	---	---	---	514DA-4 HEX	5441
0P	25mm sq	27917-78	---	---	---	514DA-4 HEX	5442
0S	25mm sq	27937-78	---	---	---	514DA-4 HEX	8002
0P	35mm sq	27917-90	---	---	---	514DA-0 HEX	5442
0S	35mm sq	27937-90	---	---	---	514DA-0 HEX	5442
0P	50mm sq	27917-107	---	---	---	514DA-0 HEX	5442
0S	50mm sq	27937-107	---	---	---	514DA-0 HEX	5441
0P	4	46646-0	---	---	---	514DA-4 HEX	5441-F
0S	4	47647-0	---	---	---	514DA-4 HEX	5441-F
4/0 P	2	47107-90	---	---	---	514DA-0 HEX	5498-1
4/0 S	2	47114-90	---	---	---	514DA-0 HEX	5498-2
4/0 P	0 (1/ 0)	47107-115	---	---	---	514DA-0 HEX	5498-1
4/0 S	0 (1/ 0)	47114-115	---	---	---	514DA-0 HEX	5498-2
4/0 P	2/0	47107-135	---	---	---	514DA-2/0 HEX	5498-1
4/0 S	2/0	47114-135	---	---	---	514DA-2/0 HEX	5498-2
4/0 P	70mm sq	47107-144	---	---	---	514DA-4/0 HEX	5487
4/0 S	70mm sq	47114-144	---	---	---	514DA-4/0 HEX	5487
4/0 P	95mm sq	47107-155	---	---	---	514DA-4/0 HEX	5487
4/0 S	95mm sq	47114-155	---	---	---	514DA-4/0 HEX	5487
4/0 P	4/0	47107-165	---	---	---	514DA-4/0 HEX	5487
4/0 S	4/0	47114-165	---	---	---	514DA-4/0 HEX	5487

Turret

AF8 Manual CrimpTool

* Pneumatic tools, dies and locators are available from Pico Corporation. Phone +1-805-388-5510, Fax +1-805-482-4038

⚠ WARNING

Tooling & Handling: Care must be taken to avoid damage to any component parts of electrical connectors during installation and use. Although there are normally no sharp edges, care must be taken when handling certain components to avoid injury to fingers. Electrical connectors may be damaged in transit to the customers, and damage may result in creation of hazards. Products should therefore be examined prior to installation/use and rejected if found to be damaged.

TOOL KITS FOR CONNECTOR ASSEMBLY

Deluxe Model Assembly Kit

The VEAM Model DMC 292 M is housed in a case with die cut poly-foam compartments to nest each tool. A complete set of connector assembly instructions is laminated in plastic and stored within the tool case for easy access.

DMC 292 M Part Number	**Tool Kit Contents** Description
1. AF8	Crimp Tool Frame
2. 616266	Turret
3. G125	Inspection Gauge
4. M2700-420	Wrench
5. 11-7345	Insertion Tool
6. 46736	Insertion Tool
7. A43240	Removal Tool Kit
8. 45-123	Wire Cutter
9. 45-092	Wire Stripper
10. TG70	Mini Strap Wrench
11. 140	Assembly Manual CD
12. 27977-16T50	Guide Pin Size 16
13. 27977-12T50	Guide Pin Size 12
14. H183BKF7240LNO	Carrying Case

⚠ WARNING

Tooling & Handling: Care must be taken to avoid damage to any component parts of electrical connectors during installation and use. Although there are normally no sharp edges, care must be taken when handling certain components to avoid injury to fingers. Electrical connectors may be damaged in transit to the customers, and damage may result in creation of hazards. Products should therefore be examined prior to installation/use and rejected if found to be damaged.

Specifications and dimensions subject to change
Dimensions shown in mm.

DSR Series

Double start, racheted coupling, electrical connectors with durable hard anodized finish.
Utilizes same insert arrangements and accessories as the CIR Series.

CIR 290 Series

A circular bayonet connector for railroad applications. Power contacts, data bus communications, waterproof. IP 67

CIR 295 Series

A bayonet circular connector for railroad applications. Rigid insulator, contacts with retention clips.

VPT Series per MIL-C-26482

Miniature bayonet connectors with 1 to 61 solder or crimp contacts. Available in different classes, for numerous applications.

CIR_ _FR Series

Rugged hard black anodized finish, available with extended coupling nuts for better gripping. Uses metal or composite backshells. Various types of strain relief accessories are available.

VRPC

Lightweight, plastic connector for the Mass Transit, Offroad and Industrial markets that is qualified for the NFF 16-101, NFF 16-102 for fire and smoke resistance.

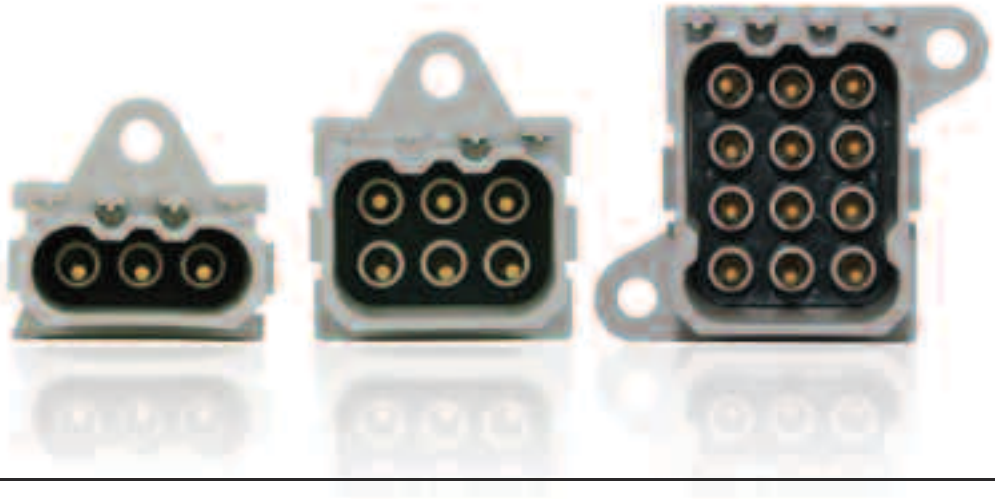

Powerlock

Single pole power connectors, 400 A, 660 A. Waterproof. Color coded and keyed for three phases, neutral and earth.

VSC

Threaded circular connector; 7 and 19 solder or crimp contacts. Socapex compatible. Ground contacts. Metal backshell and grounding feature.

Snaplock

Single pole connectors for power applications up to 200 Amps. Typically used with cable 25/35/50 sq.mm.

Specifications and dimensions subject to change
Dimensions shown in mm.

Product Safety Information

1. MATERIAL CONTENT AND PHYSICAL FORM

Electrical connectors do not usually contain hazardous materials. They contain conducting and non-conducting materials and can be divided into two groups.

a) Printed circuit types and low cost audio types which employ all plastic insulators and casings.

b) Rugged, Fire Barrier and High Reliability types with metal casings and either natural rubber, synthetic rubber, plastic or glass insulating materials. Contact materials vary with type of connector and also application and are usually manufactured from either: Copper, copper alloys, nickel, alumel, chromel or steel. In special applications, other alloys may be specified.

⚠ CAUTION

2. FIRE CHARACTERISTICS AND ELECTRIC SHOCK HAZARD

There is no fire hazard when the connector is correctly wired and used within the specified parameters.

Incorrect wiring or assembly of the connector or careless use of metal tools or conductive fluids, or transit damage to any of the component parts may cause electric shock or burns. Live circuits must not be broken by separating mated connectors as this may cause arcing, ionization and burning. Heat dissipation is greater at maximum resistance in a circuit. Hot spots may occur when resistance is raised locally by damage, e.g. cracked or deformed contacts, broken strands of wire. Local overheating may also result from the use of the incorrect application tools or from poor quality soldering or slack screw terminals. Overheating may occur if the ratings in the product Data Sheet/Catalog are exceeded and can cause breakdown of insulation and hence electric shock. If heating is allowed to continue it intensifies by further increasing the local resistance through loss of temper of spring contacts, formation of oxide film on contacts and wires and leakage currents through carbonization of insulation and tracking paths. Fire can then result in the presence of combustible materials and this may release noxious fumes. Overheating may not be visually apparent. Burns may result from touching overheated components.

3. HANDLING

Care must be taken to avoid damage to any component parts of electrical connectors during installation and use. Although there are normally no sharp edges, care must be taken when handling certain components to avoid injury to fingers.

Electrical connectors may be damaged in transit to the customers, and damage may result in creation of hazards. Products should therefore be examined prior to installation/use and rejected if found to be damaged.

4. DISPOSAL

Incineration of certain materials may release noxious or even toxic fumes.

5. APPLICATION

Connectors with exposed contacts should not be selected for use on the current supply side of an electrical circuit, because an electric shock could result from touching exposed contacts on an unmated connector. Voltages in excess of 30 V ac or 42.5 V dc are potentially hazardous and care should be taken to ensure that such voltages cannot be transmitted in any way to exposed metal parts of the connector body. The connector and wiring should be checked, before making live, to have no damage to metal parts or insulators, no solder blobs, loose strands, conducting lubricants, swarf, or any other undesired conducting particles. Circuit resistance and continuity check should be made to make certain that there are no high resistance joints or spurious conducting paths. Always use the correct application tools as specified in the Data Sheet/Catalog. Do not permit untrained personnel to wire, assemble or tamper with connectors. For operation voltage please see appropriate national regulations.

IMPORTANT GENERAL INFORMATION

(i) Air and creepage paths/Operating voltage. The admissible operating voltages depend on the individual applications and the valid national and other applicable safety regulations. For this reason the air and creepage path data are only reference values. Observe reduction of air and creepage paths due to PC board and/or harnessing.

(ii) Temperature

All information given are temperature limits. The operation temperature depends on the individual application.

(iii) Other important information

Cannon continuously endeavors to improve their products. Therefore, Cannon products may deviate from the description, technical data and shape as shown in this catalog and data sheets.

ITT Interconnect Solutions, is a business unit of ITT Corporation which manufactures the highest quality products available in the marketplace; however these products are intended to be used in accordance with the specifications in this publication. Any use or application that deviates from the stated operating specifications is not recommended and may be unsafe. No information and data contained in this publication shall be construed to create any liability on the part of Cannon. Any new issue of this publication shall automatically invalidate and supersede any and all previous issues.

Product Warranty

A limited warranty applies to Cannon products. Please refer to www.ittcannon.com (General Terms of Sale) for the complete text of Cannon's applicable Terms and Conditions, including Warranty.

This publication is not to be construed as an offer. It is intended merely as an invitation to make an offer. By this publication, Cannon does not assume responsibility or any liability for any patent infringements or other rights of third parties which may result from its use.

Reprinting this publication is generally permitted, indicating the source. However, Cannon's prior written consent must be obtained in all cases. "Engineered for life" is a registered trademark of ITT Corporation ©2012. All other trademarks or registered trademarks are property of their respective owners. All date is subject to change without notice.

This document does not contain technical data whose export is restricted by the Arms Export Control Act (Title 22, U.S.C., App 2401 et. Seq.)

ITAR CONTROLLED

ITT Interconnect Solutions
Cannon, VEAM, BIW
Connector Systems

Visit our website at
www.ittcannon.com

Global Design & Manufacturing

Customer Support

North America

MEXICO - Cannon, VEAM
Av. Libre Comercio s/n-
entre Calzada Industrial
Nuevo Nogales y Calzada del Raquet Club,
Parque Industrial Nuevo Nogales
phone: +52.631.3110050
fax: +52.631.3110060

USA - Cannon
666 East Dyer Road
Santa Ana, CA 92705
toll free: +1.800.854.3028
phone: +1.714.557.4700
fax: +1.714.628.2142

USA - BIW Connector Systems
500 Tesconi Circle
Santa Rosa, CA 95401
phone: +1.707.523.2300
fax: +1.707.523.3567

USA - VEAM
100 New Wood Road
Watertown, CT 06795
phone: +1.860.274.9681
fax: +1.860.274.4963

Europe & Middle East

FRANCE - Cannon, VEAM
15, Boulevard Robert Thiboust
Serris, France 77700
phone: +33.1.60.04.93.93
fax: +33.1.60.04.93.90

GERMANY - Cannon, VEAM
ITT Cannon GmbH
Cannonstrasse 1
Weinstadt, 71384
phone: +49.7151.699.0
fax: +49.7151.699.217

ITALY - Cannon, VEAM
Corso Europa 41/43
Lainate (MI), Italy 20020
phone: +39.02938721
fax: +39.0293872300

LEBANON - BIW Connector Systems
P.O. Box 199
Jounieh
Lebanon
phone: +961.9.911.560
fax: +961.9.912.126

UK - Cannon, VEAM
Jays Close, Viables Estate
Basingstoke, RG22 4BA
phone: +44.1256.311200
fax: +44.1256.323356

Asia

CHINA - Cannon, VEAM
Tuopandun Industrial Area,
Jinda Cheng, Xiner Village, Shajing Town,
Boan District, Shenzhen City,
Guangdong Province, China 518125
phone: +86.755.2726.7238
fax: +86.755.2726.7515

HONG KONG - Cannon, VEAM
Units 2405-6, 24/F, ING Tower
308 Des Voeux Road Central
Hong Kong
phone: +852.2732.2720
fax: +852.2732.2919

INDIA - Cannon, VEAM
ITT Corporation India Pvt Ltd
Money Chamber, Unit No. 202
#6, KH Road, Bangalore
560027
phone: +91 22 67843000
fax: +91 22 26783033

JAPAN - Cannon, VEAM
5-11-3, Hibarigaoka,
Zama-shi, Kanagawa, Japan 252-0003
phone: +81.462.57.2010
fax: +81.462.57.1680

SINGAPORE - Cannon, VEAM
10 Jalan Kilang #06-01
Singapore 159410
phone: +65.62763693 ext 232
fax: +65.62763685

ITT

ENGINEERED FOR LIFE

© 2013 ITT Corporation "Engineered for life" and "Cannon", "VEAM" and "BIW Connector Systems" are registered trademarks of ITT Corporation. Specification and other data are based on information available at the time of printing, and are subject to change without notice. Cover image courtesy of Shutterstock.