V15 SERIES

004945
Issue 15

MICRO SWITCH Standard Miniature Basic Switches

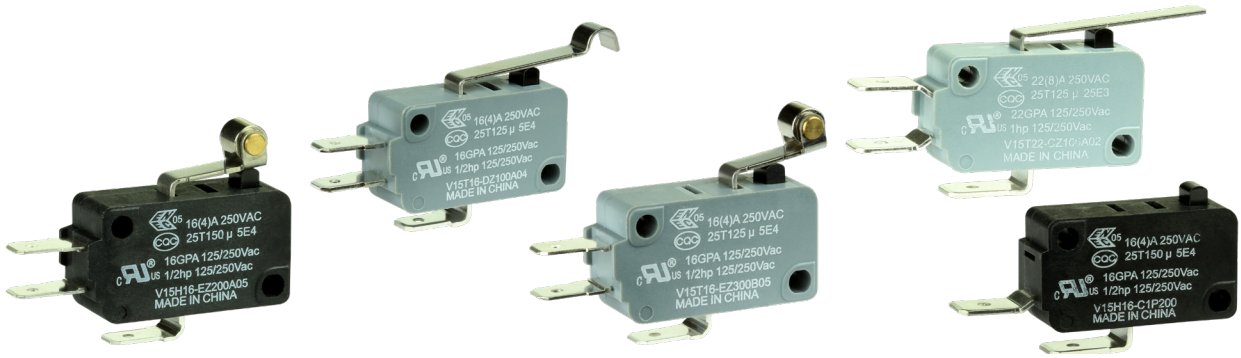

APPLICATIONS

Presence Detection
Ensures door latching and safe operation

Float Switch
On/off power to stop overflow conditions

Flow Switch
Enables safe and efficient water usage

Power Switch
Reliable system control for motors, pumps, fans

Operator Controls
Interface control for system auxiliary functions

VALUE PROPOSITION

The Honeywell MICRO SWITCH V-Basic Standard Switch, V15 Series is an electromechanical switch designed to provide outstanding value in a reliable global package. This switch is often ideal for “low-cost-of-failure” applications, where the cost is minimal to replace or service any failure related to the switch. With a wide variety of operating forces, and amperage ratings, the V15 is designed for numerous types of applications.

V15 FEATURES	V15 BENEFITS	OUR VALUE
Six full certified electrical ratings	Electrical ratings for design flexibility in one industry standard package size	Competitive cross references available
Two million cycles minimum for certain designs	Globally certified for reliable, repeatable actuation for life	Snap-spring mechanism with more than 80 years of MICRO SWITCH service
UL, CE, UKCA, cUL, ENEC and CQC	Identical system designs for platform applications worldwide	Certifications enable global design acceptance and cost savings in agency approvals
Four contact material options	Contact variants to enable design and regulation compliance	Industry standard switch footprint and global certifications ideal for “low-cost-of-failure” applications
Highly configurable product offerings	Actuation, termination, housing, and special modifications available to enable design platform flexibility	

Honeywell

MICRO SWITCH STANDARD BASIC SWITCHES
V15 SERIES

TABLE 1. SPECIFICATIONS

CHARACTERISTIC	PARAMETER
Circuitry	SPDT, SPNO, SPNC
Operating force	0,15 N to 3,92 N [15g to 400 g]
Termination	quick connect; 6,35 mm x 0,80 mm [0.250 in x 0.032 in] quick connect 4,80 mm x 0,80 mm [0.187 in x 0.032 in] quick connect 4,80 mm x 0,50 mm [0.187 in x 0.020 in] push-in terminals; RAST-5 250#; RAST-7 250#; short solder; slot-hole solder; solder; right side PCB; left side PCB; straight PCB; screw; oblique screw
Actuators	pin plunger, integral lever options
Agency certification	UL, CE, UKCA, cUL, ENEC, CQC
Operating temperature (manufacturer specified)	code S: -25°C to 85°C [-13 °F to 185 °F] code T: -25°C to 125°C [-13 °F to 257 °F] code H: -25°C to 150°C [-13 °F to 302 °F]
Humidity	Validated to 240 hours at 40°C [40°F], 95 %RH
Mechanical life (cycles)	1 million cycles (except for 200 g versions of V15S05 and V15T10 which are 500,000 cycles)
Contact material	silver (≤5 A), silver cadmium oxide (>5 A); gold-plated and cadmium-free options available
Housing material	PBT thermoplastic polyester (standard) PET thermoplastic polyester (V15H high temperature, 150°C [302 °F])

TABLE 2. ELECTRICAL RATINGS

RATING/ NOMENCLATURE CODE	UL/CUL (CUL 61058-1, FILE 12252) AMERICAS	ENEC (IEC 61058-1) EUROPE CQC (GB15092-1) ASIA-PACIFIC
05	5 GPA 125/250 Vac; 0.1 GPA 125/250 Vac 1/10 HP 125/250 Vac 0.1 RA 48 Vdc 10,000 cycles	0.1 A 125/250 Vac; 0.1 A 48 Vdc 5 (2.5) A 125/250 Vac 50,000 cycles ("M" Contact: 25,000 cycles)
H10	10 GPA 125/250 Vac 1/2 HP 125/250 Vac 1.0 RA 30 Vdc 100,000 cycles	0.5 A 125 Vdc, 0.25 A 250 Vdc 10(3) A 125/250 Vac 50,000 cycles Contact "M" option not available
T10	11 GPA 125/250 Vac 1/3 HP 125/250 Vac 0.5 RA 125 Vdc 0.25 RA 250 Vdc 10,000 cycles	0.5 A 125 Vdc; 0.25 A 250 Vdc 10 (3) A 125/250 Vac 50,000 cycles Contact "M" option not available
S11	11 (3) 125/250 Vac 50,000 cycles	11 (3) 125/250 Vac 50,000 cycles Contact "M" option not available (ENEC only)
16	16 GPA 125/250 Vac 1/2 HP 125/250 Vac 10,000 cycles	16 (4) A 250 Vac 50,000 cycles ("M" Contact: 25,000 cycles)
22	22 GPA 125/250 Vac 1 HP 125/250 Vac 10,000 cycles	22 (8) A 250 Vac 50,000 cycles ("M" Contact: 25,000 cycles)
26	26 GPA 125/250 Vac 2 HP 250 Vac	0.02 A 250 Vac 26 (10) A 250 Vac 50,000 cycles ("M" Contact: 25,000 cycles)

- RA = Resistive Amps (Resistive Load)
- GPA = General Purpose Amps (Inductive Load, 75 % to 80 % power factor)
- VL = Lamp Load
- XX (Y) = XX max. resistive value (Amps) and (Y) max. inductive value (Amps)

MICRO SWITCH STANDARD BASIC SWITCHES
V15 SERIES

V15S05 PRODUCT NOMENCLATURE

V15 S 05 – C 1 Z 200 A 06 – K A

Switch Type
V15 Series Standard Basic Switch

Temperature Grade
- **S** 85 °C [185 °F] (for "05" and "11" ratings only)

Electrical Rating
- **05** 0.1 A 48 Vdc/ 125 Vac/250 Vac; 5 A 125 Vac/250 Vac
- **11*** 11 A 125 Vac/250 Vac

Terminal Type
- **C** Quick connect 6,30 mm x 0,80 mm [0.250 in x 0.032 in]
- **D** Quick connect 4,70 mm x 0,80 mm [0.187 in x 0.032 in]
- **E** Quick connect 4,70 mm x 0,50 mm [0.187 in x 0.020 in]
- **F** Screw terminal w/ pressure plate
- **U** Push-in terminal (used only in combination with "S11")

Housing Type
- Basic (blank)
- **1** Flat
- **2** Fully flat

Circuit Code
- **Z** SPDT
- **P** SPST-NO
- **C** SPST-NC

Operating Force (at pin plunger max)
- **015** 15 gf; 0,15 N
- **025** 25 gf; 0,25 N
- **050** 50 gf; 0,49 N
- **100** 100 gf; 0,96 N
- **200** 200 gf; 1,96 N

Lever Position
- Pin plunger, no lever (blank)
- **A** Far from pin plunger
- **B** Near pin plunger

Lever Type
- No Lever (blank)
- **01** Short straight lever
- **02** Standard straight lever
- **03** Long straight lever
- **04** Simulated roller lever
- **05** Roller lever
- **06** Long roller lever
- ****** Special

Mounting Holes
- Metric Ø 3,1 mm (blank)
- **K** USA Ø 2,9 mm

Special Designator
A special designator letter is used only when there is a special modification to the switch. Review Product Specification to determine the exact differences. Below is an example.
- **A** Gold-plated contacts
- **M** Optimized contacts***

* Type "11" rating only available with U terminal type and 200 gf operating force.
** Additional code assigned for specials
*** "M" contact designation not allowed with "11" electrical rating

V15T10 PRODUCT NOMENCLATURE

V15 T 10 – C 1 Z 200 A 06 – K A

Switch Type
V15 Series Standard Basic Switch

Temperature Grade
- **T** 125 °C [257 °F]

Electrical Rating
- **10** 0.5 A 125 Vdc; 0.25 A 250 Vdc; 4 A 125 Vac (lamp load)*; 10 A/11 A 125 Vac/250 Vac; 1/3 HP 125 Vac/250 Vac

*Lamp load 4 A 125 VL is not allowed with V15T10 50 gfs

Terminal Type
- **C** Quick connect 6,30 mm x 0,80 mm [0.250 in x 0.032 in]
- **D** Quick connect 4,70 mm x 0,80 mm [0.187 in x 0.032 in]
- **E** Quick connect 4,70 mm x 0,50 mm [0.187 in x 0.020 in]
- **F** Screw terminal w/ pressure plate

Housing Type
- Basic (blank)
- **1** Flat
- **2** Fully flat

Circuit Code
- **Z** SPDT
- **P** SPST-NO
- **C** SPST-NC

Operating Force (at pin plunger max)
- **050** 50 gf; 0,49 N
- **100** 100 gf; 0,96 N
- **200** 200 gf; 1,96 N

Lever Position
- Pin plunger, no lever (blank)
- **A** Far from pin plunger
- **B** Near pin plunger

Lever Type
- No Lever (blank)
- **01** Short straight lever
- **02** Standard straight lever
- **03** Long straight lever
- **04** Simulated roller lever
- **05** Roller lever
- **06** Long roller lever
- ****** Special

Mounting Holes
- Metric Ø 3,1 mm (blank)
- **K** USA Ø 2,9 mm

Special Designator
A special designator letter is used only when there is a special modification to the switch. Review Product Specification to determine the exact differences. Below is an example.
- **A** Gold-plated contacts
- **F** Cadmium-free contacts

** Additional code assigned for specials

V15H16/T16/T22/H22/T26 PRODUCT NOMENCLATURE

V15 H 16 – C 1 Z 200 A 06 – K A

Switch Type
V15 Series Standard Basic Switch

Temperature Grade
- **T** 125 °C [257 °F]
- **H** 150 °C [302 °F]

Electrical Rating
- **10** 0.5 A 125 Vdc, 0.25 A 250 Vdc; 1 A 30 Vdc; 10 A 1/2 HP 125/250 Vac (H temperature grade only)
- **16** 16 A 125 Vac/250 Vac; 1/2 HP 125 Vac/250 Vac
- **22** 22 A 125 Vac/250 Vac; 1 HP 125 Vac/250 Vac
- **26** 0.02 A 250 Vac; 26 A 250 Vac; 2 HP 250 Vac

Terminal Type
- **C** Quick connect 6,30 mm x 0,80 mm [0.250 in x 0.032 in]
- **D** Quick connect 4,70 mm x 0,80 mm [0.187 in x 0.032 in]
- **E** Quick connect 4,70 mm x 0,50 mm [0.187 in x 0.020 in]
- **F** Screw terminal w/ pressure plate
- **H** RAST-5 250# connector
- **K** Slot hole, solder terminal
- **L** Left side, PCB terminal
- **M** Short solder terminal
- **N** RAST-7 250# connector
- **P** Straight PCB terminal
- **R** Right side, PCB terminal
- **S** Solder terminal
- **T** Screw terminal
- ****** Special terminal

Housing Type
- Basic (blank)
- **1** Flat
- **2** Fully flat

Circuit Code
- **Z** SPDT
- **P** SPST-NO
- **C** SPST-NC

Operating Force (at pin plunger max)
- **100** 100 gf; 0,96 N
- **200** 200 gf; 1,96 N
- **300** 300 gf; 2,84 N
- **400** 400 gf; 3,92 N

Lever Position
- Pin plunger, no lever (blank)
- **A** Far from pin plunger
- **B** Near pin plunger

Lever Type
- No Lever (blank)
- **01** Short straight lever
- **02** Standard straight lever
- **03** Long straight lever
- **04** Simulated roller lever
- **05** Roller lever
- **06** Long roller lever
- ****** Special

Mounting Holes
- Metric Ø 3,1 mm (blank)
- **K** USA Ø 2,9 mm

Special Designator
A special designator letter is used only when there is a special modification to the switch. Review Product Specification to determine the exact differences. Below is an example.
- **A** Gold-plated contacts
- **F** Cadmium-free contacts
- **M** Optimized[2] contacts

[A] "H" temperature grade not allowed with "26" electrical rating
[1] "100" gf not allowed with "26" electrical rating
[2] "M" contact designation not allowed with "10" electrical rating
** Additional code assigned for specials

MICRO SWITCH STANDARD BASIC SWITCHES
V15 SERIES

PRODUCT SPECIFICATIONS AND LISTINGS

Contact your Honeywell rep or distributor for additional listings

O.F. • Operating force
R.F. • Release force
P.T. • Pretravel
O.T. • Overtravel
D.T. • Differential travel
O.P. • Operating position

TABLE 3. CONFIGURATIONS AND CHARACTERISTICS

ACTUATION TYPE	ACTUATION PICTURE	ELEC. RATING UL/CUL (ENEC)	ELECTRICAL RATING (SEE PAGE 5)	TEMPERATURE RATING	CIRCUITRY	O.F. MAX. G [OZ]	R. F. MAX. G [OZ]	O.P. NOMINAL MM [IN]	P.T. MAX. MM [IN]	D.T. MIN. MM [IN]	O.T. MAX. MM [IN]	MOUNTING HOLES	AVAILABLE W/ CADMIUM FREE CONTACTS
Pin plunger		5 A (5 A)	05	85°C	SPNO	100 [3.53]	25 [0.88]	14,7 [0.58]	1,6 [0.06]	0,4 [0.02]	0,8 [0.03]	Metric	No
					SPDT	15 [0.53]	3 [0.11]	14,7 [0.58]	1,6 [0.06]	0,4 [0.02]	0,8 [0.03]	Metric	
					SPDT	100 [3.53]	25 [0.88]	14,7 [0.58]	1,6 [0.06]	0,4 [0.02]	0,8 [0.03]	Metric	
					SPDT	100 [3.53]	25 [0.88]	14,7 [0.58]	1,6 [0.06]	0,4 [0.02]	0,8 [0.03]	USA	
		10 A (---)	H10	150°C	SPNO	100 [3.53]	25 [0.88]	14,7 [0.58]	1,6 [0.06]	0,4 [0.02]	0,8 [0.03]	Metric	No
					SPDT	100 [3.53]	25 [0.88]	14,7 [0.58]	1,6 [0.06]	0,4 [0.02]	0,8 [0.03]	Metric	
		11 A (10 A)	T10	125°C	SPDT	100 [3.53]	25 [0.88]	14,7 [0.58]	1,6 [0.06]	0,4 [0.02]	0,8 [0.03]	Metric	Yes
		16 A (16 A)	16	125°C	SPNO	100 [3.53]	25 [0.88]	14,7 [0.58]	1,6 [0.06]	0,4 [0.02]	0,8 [0.03]	Metric	Yes
					SPDT	100 [3.53]	25 [0.88]	14,7 [0.58]	1,6 [0.06]	0,4 [0.02]	0,8 [0.03]	USA	
				150°C	SPDT	100 [3.53]	25 [0.88]	14,7 [0.58]	1,6 [0.06]	0,4 [0.02]	0,8 [0.03]	Metric	
		22 A (22 A)	22	125°C	SPNO	100 [3.53]	25 [0.88]	14,7 [0.58]	1,6 [0.06]	0,4 [0.02]	0,8 [0.03]	USA	Yes
					SPDT	100 [3.53]	25 [0.88]	14,7 [0.58]	1,6 [0.06]	0,4 [0.02]	0,8 [0.03]	USA	
				150°C	SPNO	100 [3.53]	25 [0.88]	14,7 [0.58]	1,6 [0.06]	0,4 [0.02]	0,8 [0.03]	Metric	
					SPDT	100 [3.53]	25 [0.88]	14,7 [0.58]	1,6 [0.06]	0,4 [0.02]	0,8 [0.03]	Metric	
		--- (26 A)	26	125°C	SPNO	200 [7.05]	50 [1.76]	14,7 [0.58]	1,6 [0.06]	0,4 [0.02]	0,8 [0.03]	USA	Yes
					SPDT	200 [7.05]	50 [1.76]	14,7 [0.58]	1,6 [0.06]	0,4 [0.02]	0,8 [0.03]	Metric	
Short straight		10 A (---)	H10	150°C	SPDT	140 [4.94]	20 [0.71]	15,3 [0.60]	2,4 [0.09]	0,6 [0.023]	1,2 [0.05]	Metric	No
		11 A (10 A)	T10	125°C	SPDT	100 [3.53]	25 [0.88]	15,3 [0.60]	1,6 [0.06]	0,4 [0.02]	0,8 [0.03]	Metric	Yes
		16 A (16 A)	16	150°C	SPDT	100 [3.53]	25 [0.88]	15,3 [0.60]	1,6 [0.06]	0,4 [0.02]	0,8 [0.03]	Metric	Yes
					SPDT	400 {14.11]	100 [3.53]	15,3 [0.60]	1,6 [0.06]	0,4 [0.02]	0,8 [0.03]	Metric	
				125°C	SPNC	100 [3.53]	25 [0.88]	15,3 [0.60]	1,6 [0.06]	0,4 [0.02]	0,8 [0.03]	Metric	
					SPNO	300 [10.58]	75 [2.65]	15,3 [0.60]	1,6 [0.06]	0,4 [0.02]	0,8 [0.03]	Metric	
					SPDT	100 [3.53]	25 [0.88]	15,3 [0.60]	1,6 [0.06]	0,4 [0.02]	0,8 [0.03]	USA	
					SPNO	200 [7.05]	50 [1.76]	15,3 [0.60]	1,6 [0.06]	0,4 [0.02]	0,8 [0.03]	Metric	
					SPDT	200 [7.05]	50 [1.76]	15,3 [0.60]	1,6 [0.06]	0,4 [0.02]	0,8 [0.03]	USA	

MICRO SWITCH STANDARD BASIC SWITCHES
V15 SERIES

PRODUCT SPECIFICATIONS AND LISTINGS

Contact your Honeywell rep or distributor for additional listings

O.F. • Operating force
R.F. • Release force
P.T. • Pretravel
O.T. • Overtravel
D.T. • Differential travel
O.P. • Operating position

TABLE 3. CONFIGURATIONS AND CHARACTERISTICS

ACTUATION TYPE	ACTUATION PICTURE	ELEC. RATING UL/CUL (ENEC)	ELECTRICAL RATING (SEE PAGE 5)	TEMPERATURE RATING	CIRCUITRY	O.F. MAX. G [OZ]	R. F. MAX. G [OZ]	O.P. NOMINAL MM [IN]	P.T. MAX. MM [IN]	D.T. MIN. MM [IN]	O.T. MAX. MM [IN]	MOUNTING HOLES	AVAILABLE W/ CADMIUM FREE CONTACTS
Standard straight		5 A (5 A)	05	85°C	SPDT	10 [0.35]	2 [0.07]	15,3 [0.60]	6,0 [0.24]	1,65 [0.064]	2,2 [0.086]	Metric	No
						15 [0.53]	2 [0.07]	15,3 [0.60]	3,2 [0.126]	1,2 [0.047]	1,3 [0.051]	Metric	No
		10 A (---)	H10	150°C	SPNC	120 [4.23]	20 [0.71]	15,3 [0.60]	3,2 [0.126]	1,2 [0.047]	1,3 [0.051]	Metric	No
		11 A (10 A)	T10	125°C	SPDT	30 [1.06]	5 [0.18]	15,3 [0.60]	3,2 [0.126]	1,2 [0.047]	1,3 [0.051]	Metric	Yes
		16 A (16 A)	16	150°C	SPNO	60 [2.12]	10 [0.35]	15,3 [0.60]	3,2 [0.126]	1,2 [0.047]	1,3 [0.051]	Metric	Yes
					SPDT	60 [2.12]	10 [0.35]	15,3 [0.60]	3,2 [0.126]	1,2 [0.047]	1,3 [0.051]	Metric	Yes
					SPDT	120 [4.23]	20 [0.71]	15,3 [0.60]	3,2 [0.126]	1,2 [0.047]	1,3 [0.051]	Metric	Yes
					SPNO	240 [8.47]	40 [1.41]	15,3 [0.60]	3,2 [0.126]	1,2 [0.047]	1,3 [0.051]	USA	Yes
					SPDT	80 [2.82]	16 [0.56]	15,3 [0.60]	6,0 [0.24]	1,65 [0.064]	2,2 [0.09]	Metric	Yes
				125°C	SPNO	180 [6.35]	30 [1.06]	15,3 [0.60]	3,2 [0.126]	1,2 [0.047]	1,3 [0.051]	Metric	Yes
					SPDT	60 [2.12]	10 [0.35]	15,3 [0.60]	3,2 [0.126]	1,2 [0.047]	1,3 [0.051]	Metric	Yes
					SPDT	120 [4.23]	20 [0.71]	15,3 [0.60]	3,2 [0.126]	1,2 [0.047]	1,3 [0.051]	Metric	Yes
		22 A (22 A)	22	125°C	SPDT	180 [6.35]	30 [1.06]	15,3 [0.60]	3,2 [0.126]	1,2 [0.047]	1,3 [0.051]	Metric	Yes
					SPNC	120 [4.23]	20 [0.71]	15,3 [0.60]	3,2 [0.126]	1,2 [0.047]	1,3 [0.051]	Metric	Yes
				150°C	SPNO	60 [2.12]	10 [0.35]	15,3 [0.60]	3,2 [0.126]	1,2 [0.047]	1,3 [0.051]	Metric	Yes
					SPDT	60 [2.12]	10 [0.35]	15,3 [0.60]	3,2 [0.126]	1,2 [0.047]	1,3 [0.051]	Metric	Yes
Long straight		10 A (---)	H10	150°C	SPNO	60 [2.12]	10 [0.35]	15,3 [0.60]	6,4 [0.25]	2,4 [0.09]	2,6 [0.10]	Metric	No
		11 A (10 A)	T10	125°C	SPDT	60 [2.12]	10 [0.35]	15,3 [0.60]	6,4 [0.25]	2,4 [0.09]	2,6 [0.10]	Metric	Yes
		16 A (16 A)	16	150°C	SPDT	30 [1.06]	5 [0.18]	15,3 [0.60]	6,4 [0.25]	2,4 [0.09]	2,6 [0.10]	USA	Yes
				150°C	SPDT	90 [3.17]	15 [0.53]	15,3 [0.60]	6,4 [0.25]	2,4 [0.09]	2,6 [0.10]	USA	Yes
				125°C	SPDT	30 [1.06]	5 [0.18]	15,3 [0.60]	6,4 [0.25]	2,4 [0.09]	2,6 [0.10]	Metric	Yes
				125°C	SPDT	60 [2.12]	10 [0.35]	15,3 [0.60]	6,4 [0.25]	2,4 [0.09]	2,6 [0.10]	USA	Yes
		22 A (22 A)	22	150°C	SPNO	32 [1.13]	8 [0.28]	15,3 [0.60]	12 [0.47]	3,5 [0.14]	5,3 [0.21]	Metric	Yes
				150°C	SPDT	90 [3.17]	15 [0.53]	15,3 [0.60]	6,4 [0.25]	2,4 [0.09]	2,6 [0.10]	USA	Yes
				125°C	SPDT	30 [1.06]	5 [0.18]	15,3 [0.60]	6,4 [0.25]	2,4 [0.09]	2,6 [0.10]	Metric	Yes
		--- (26 A)	26	125°C	SPDT	60 [2.12]	10 [0.35]	15,3 [0.60]	6,4 [0.25]	2,4 [0.09]	2,6 [0.10]	Metric	Yes

MICRO SWITCH STANDARD BASIC SWITCHES
V15 SERIES

O.F. • Operating force
R.F. • Release force
P.T. • Pretravel
O.T. • Overtravel
D.T. • Differential travel
O.P. • Operating position

PRODUCT SPECIFICATIONS AND LISTINGS

Contact your Honeywell rep or distributor for additional listings

TABLE 3. CONFIGURATIONS AND CHARACTERISTICS

ACTUATION TYPE	ACTUATION PICTURE	ELEC. RATING UL/CUL (ENEC)	ELECTRICAL RATING (SEE PAGE 5)	TEMPERATURE RATING	CIRCUITRY	O.F. MAX. G [OZ]	R. F. MAX. G [OZ]	O.P. NOMINAL MM [IN]	P.T. MAX. MM [IN]	D.T. MIN. MM [IN]	O.T. MAX. MM [IN]	MOUNTING HOLES	AVAILABLE W/ CADMIUM FREE CONTACTS
Simulated roller		16A (16A)	16	150°C	SPDT	80[2.82]	15 [0.53]	18,5 [0.73]	6,0 [0.24]	1,65 [0.064]	2,2 [0.09]	Metric	Yes
				150°C	SPDT	180 [6.35]	30 [1.06]	18,5 [0.73]	3,2 [0.13]	1,2 [0.05]	1,3 [0.05]	Metric	Yes
				125°C	SPDT	60 [2.12]	10 [0.35]	18,5 [0.73]	3,2 [0.13]	1,2 [0.05]	1,3 [0.05]	Metric	Yes
				125°C	SPDT	120 [4.23]	20 [0.71]	18,5 [0.73]	3,2 [0.13]	1,2 [0.05]	1,3 [0.05]	USA	Yes
		22 A (22 A)	22	150°C	SPDT	80 [2.82]	15 [0.53]	18,5 [0.73]	6,0 [0.24]	1,65 [0.064]	2,2 [0.09]	USA	Yes
				125°C	SPNO	120 [4.23]	20 [0.71]	18,5 [0.73]	3,2 [0.13]	1,2 [0.05]	1,3 [0.05]	Metric	Yes
				125°C	SPDT	180 [6.35]	30 [1.06]	18,5 [0.73]	3,2 [0.13]	1,2 [0.05]	1,3 [0.05]	Metric	Yes
				125°C	SPNC	120 [4.23]	20 [0.71]	18,5 [0.73]	3,2 [0.13]	1,2 [0.05]	1,3 [0.05]	Metric	Yes
		--- (26 A)	26	125°C	SPDT	180 [6.35]	30 [1.06]	18,5 [0.73]	3,2 [0.13]	1,2 [0.05]	1,3 [0.05]	Metric	Yes
Short roller lever		5 A (5 A)	05	85°C	SPDT	60 [2.12]	10 [0.35]	20,6 [0.81]	1,6 [0.06]	0,4 [0.02]	0,8 [0.03]	Metric	Default
				85°C	SPDT	120 [4.23]	20 [0.71]	20,6 [0.81]	1,6 [0.06]	0,4 [0.02]	0,8 [0.03]	Metric	Default
		11 A (10 A)	T10	125°C	SPDT	240 [8.47]	40 [1.41]	20,6 [0.81]	1,6 [0.06]	0,4 [0.02]	0,8 [0.03]	Metric	Yes
		16 A (16 A)	16	150°C	SPDT	120 [4.23]	20 [0.71]	20,6 [0.81]	1,6 [0.06]	0,4 [0.02]	0,8 [0.03]	Metric	Yes
				150°C	SPNO	120 [4.23]	20 [0.71]	20,6 [0.81]	1,6 [0.06]	0,4 [0.02]	0,8 [0.03]	Metric	Yes
				150°C	SPDT	240 [8.47]	40 [1.41]	20,6 [0.81]	1,6 [0.06]	0,4 [0.02]	0,8 [0.03]	Metric	Yes
				125°C	SPNC	120 [4.23]	20 [0.71]	20,6 [0.81]	1,6 [0.06]	0,4 [0.02]	0,8 [0.03]	Metric	Yes
				125°C	SPDT	120 [4.23]	20 [0.71]	20,6 [0.81]	1,6 [0.06]	0,4 [0.02]	0,8 [0.03]	Metric	Yes
				125°C	SPDT	240 [8.47]	40 [1.41]	20,6 [0.81]	1,6 [0.06]	0,4 [0.02]	0,8 [0.03]	Metric	Yes
				125°C	SPNO	240 [8.47]	40 [1.41]	20,6 [0.81]	1,6 [0.06]	0,4 [0.02]	0,8 [0.03]	Metric	Yes
				125°C	SPDT	120 [4.23]	20 [0.71]	20,6 [0.81]	1,6 [0.06]	0,4 [0.02]	0,8 [0.03]	Metric	Yes
				125°C	SPDT	240 [8.47]	40 [1.41]	20,6 [0.81]	1,6 [0.06]	0,4 [0.02]	0,8 [0.03]	Metric	Yes
		22 A (22 A)	22	150°C	SPDT	120 [4.23]	20 [0.71]	20,6 [0.81]	1,6 [0.06]	0,4 [0.02]	0,8 [0.03]	Metric	Yes
				125°C	SPDT	240 [8.47]	40 [1.41]	20,6 [0.81]	1,6 [0.06]	0,4 [0.02]	0,8 [0.03]	Metric	Yes
Roller lever	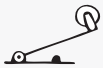	5 A (5 A)	05	85°C	SPNO	120 [4.23]	20 [0.71]	20,6 [0.81]	3,2 [0.13]	1,2 [0.05]	1,3 [0.05]	Metric	Default
				85°C	SPDT	35 [1.23]	5 [0.18]	20,6 [0.81]	3,2 [0.13]	1,2 [0.05]	1,3 [0.05]	Metric	Default
		11 A (10 A)	T10	125°C	SPDT	120 [4.23]	20 [0.71]	20,6 [0.81]	3,2 [0.13]	1,2 [0.05]	1,3 [0.05]	Metric	Yes
		16 A (16 A)	16	150°C	SPDT	60 [2.12]	10 [0.35]	20,6 [0.81]	3,2 [0.13]	1,2 [0.05]	1,3 [0.05]	USA	Yes
				150°C	SPNO	80 [2.82]	10 [0.35]	20,6 [0.81]	6,0 [0.24]	1,6 [0.06]	2,2 [0.09]	Metric	Yes
				125°C	SPNO	120 [4.23]	20 [0.71]	20,6 [0.81]	3,2 [0.13]	1,2 [0.05]	1,3 [0.05]	Metric	Yes
				125°C	SPDT	60 [2.12]	10 [0.35]	20,6 [0.81]	3,2 [0.13]	1,2 [0.05]	1,3 [0.05]	Metric	Yes
				125°C	SPDT	60 [2.12]	10 [0.35]	20,6 [0.81]	3,2 [0.13]	1,2 [0.05]	1,3 [0.05]	Metric	Yes
				125°C	SPDT	120 [4.23]	20 [0.71]	20,6 [0.81]	3,2 [0.13]	1,2 [0.05]	1,3 [0.05]	Metric	Yes
		22 A (22 A)	22	150°C	SPDT	60 [2.12]	10 [0.35]	20,6 [0.81]	3,2 [0.13]	1,2 [0.05]	1,3 [0.05]	Metric	Yes
				125°C	SPDT	120 [4.23]	20 [0.71]	20,6 [0.81]	3,2 [0.13]	1,2 [0.05]	1,3 [0.05]	Metric	Yes

MICRO SWITCH STANDARD BASIC SWITCHES
V15 SERIES

MOUNTING DIMENSIONS

Figure 1. V15 Series Standard Switch Dimensions

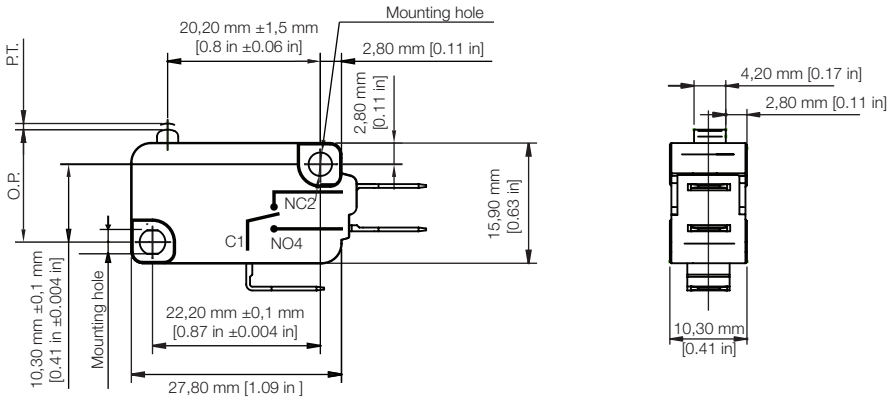

Figure 2. V15 Series Metric Mounting Hole Dimensions for Ø 3 mm pins or screws

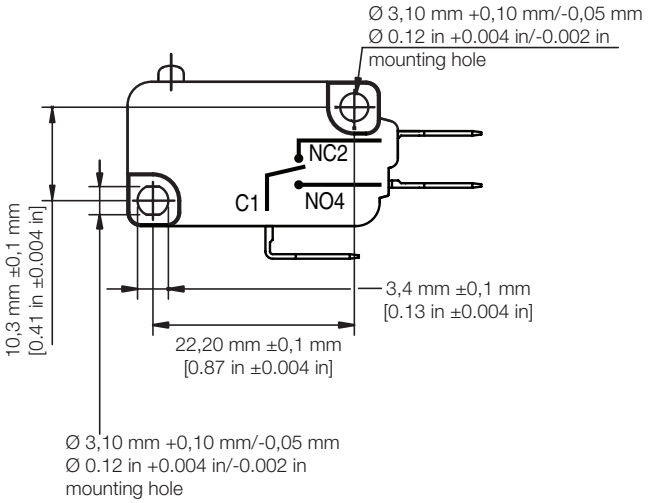

Figure 3. V15 Series USA Mounting Hole Dimensions for #4 screws

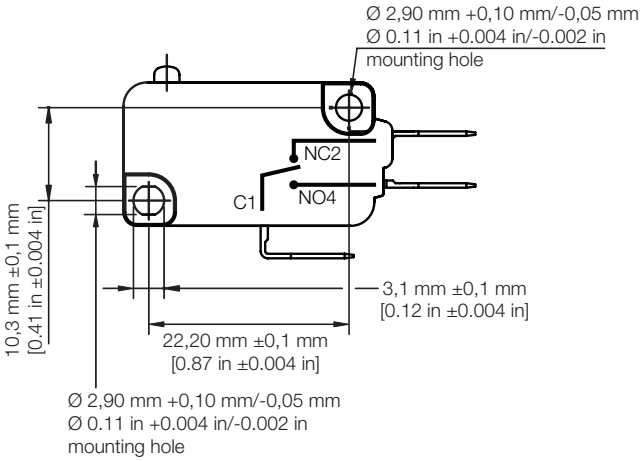

Figure 4. V15 Series Housing Dimensions

BASIC HOUSING TYPE	FLAT HOUSING TYPE	FULLY FLAT HOUSING TYPE
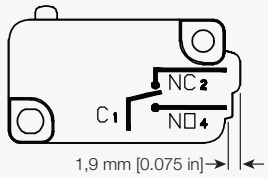	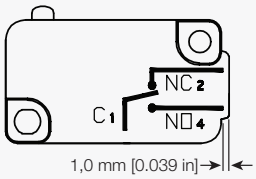	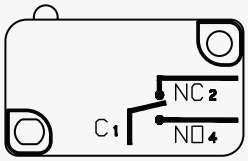

MICRO SWITCH STANDARD BASIC SWITCHES
V15 SERIES

CONNECTION DIMENSIONS

Figure 5. V15 Series C-style Quick Connect • 6,35 mm wide x 0,8 mm thick [0.25 in wide x 0.031 in thick]

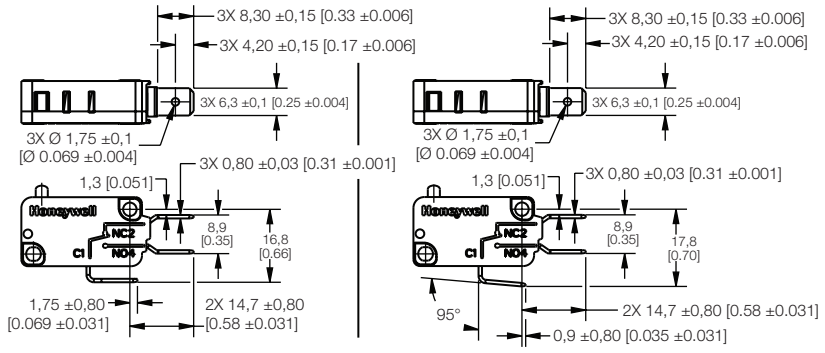

Not allowed with "S05" and "T10" ratings

Only allowed with "S05" and "T10" ratings

Figure 6. V15 Series H-style RAST-5 250# Connector

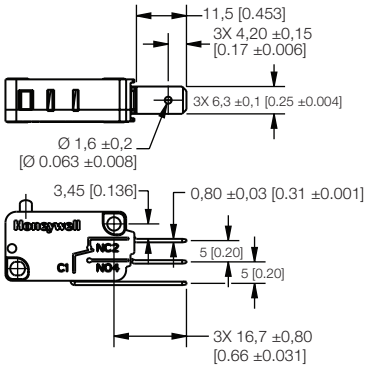

Figure 7. V15 Series D-style Quick Connect • 4,80 mm wide x 0,8 mm thick [0.189 in wide x 0.031 in thick]

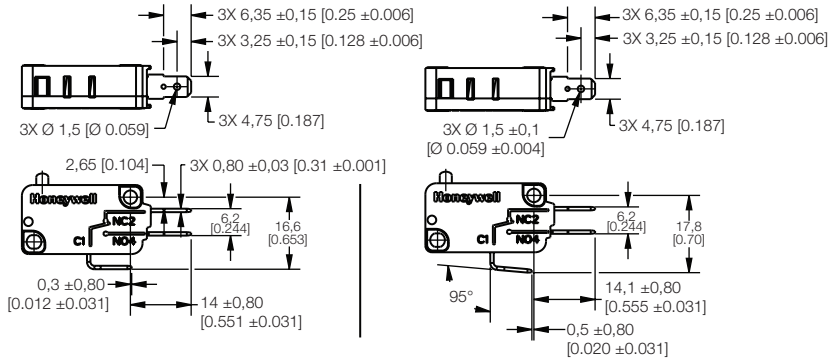

Not allowed with "S05" and "T10" ratings

Only allowed with "S05" and "T10" ratings

Figure 8. V15 Series N-style RAST-7 250# Connector

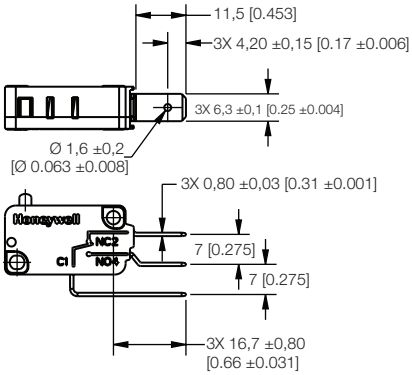

Figure 9. V15 Series E-style Quick Connect • 4,80 mm wide x 0,5 mm thick [0.189 in wide x 0.020 in thick]

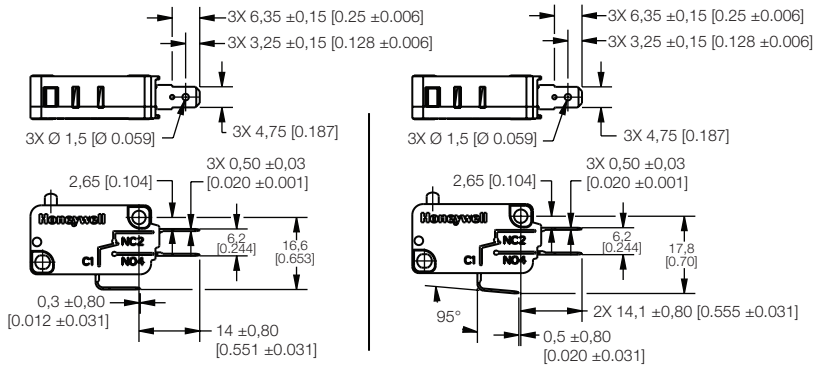

Not allowed with "S05" and "T10" ratings

Only allowed with "S05" and "T10" ratings

Figure 10. V15 Series M-style Short Solder Terminal

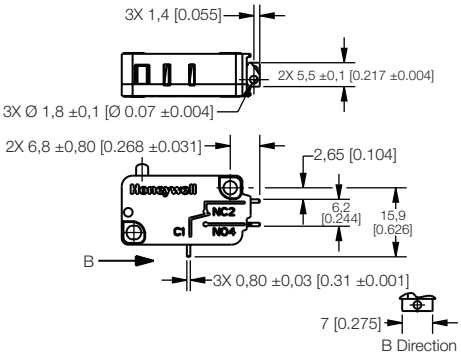

MICRO SWITCH STANDARD BASIC SWITCHES
V15 SERIES

CONNECTION DIMENSIONS

Figure 11. V15 Series K-style Slot-Hole Solder Terminal

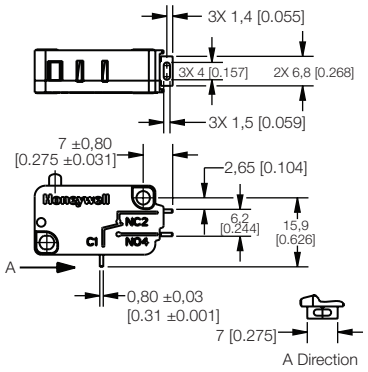

Figure 12. V15 Series S-style Solder Terminal

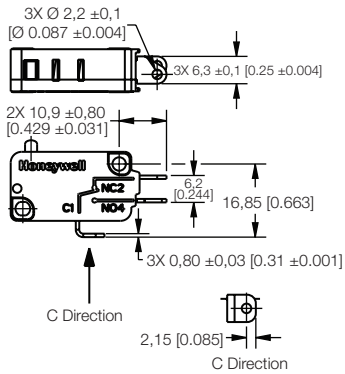

Figure 13. V15 Series T-styleScrew Terminal

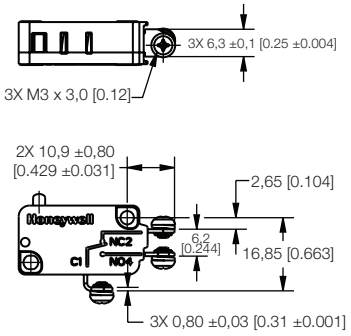

Figure 14. V15 Series L-style Left-Side PCB Terminal

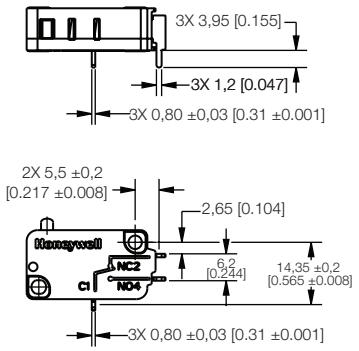

Figure 15. V15 Series P-style Straight PCB Terminal

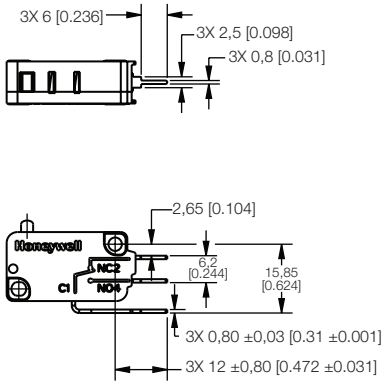

Figure 16. V15 Series R-style Right-Side PCB Terminal

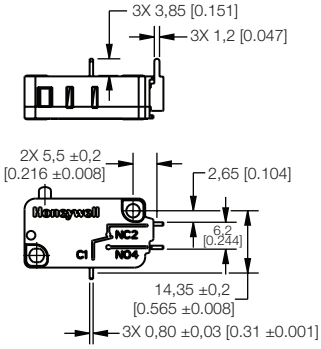

Figure 17. V15 Series F-style Screw Terminal with Pressure Plate

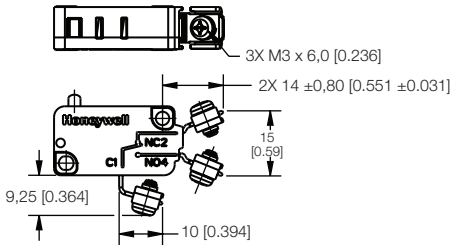

Figure 18. V15 Series U-Style Push-In Terminal (only allowed with V15S11)

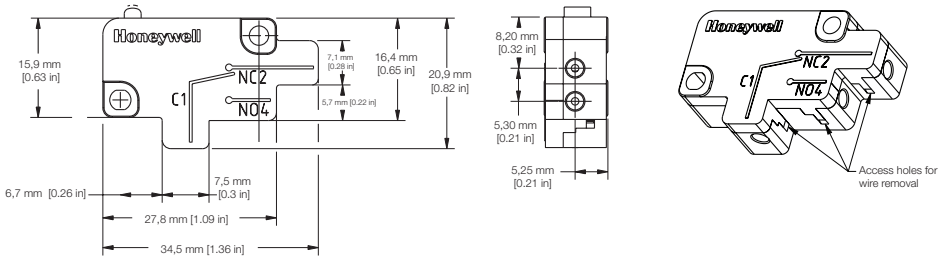

MICRO SWITCH STANDARD BASIC SWITCHES
V15 SERIES

STANDARD LEVER OPTIONS • DIMENSIONS

Figure 19. V15 Series A01/Straight Short Lever

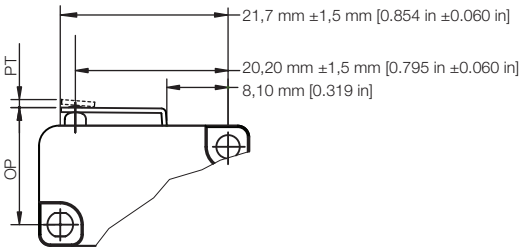

Figure 20. V15 Series A02/Standard Straight Lever

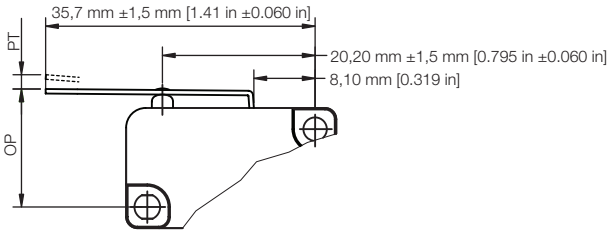

Figure 21. V15 Series A03/Long Straight Lever

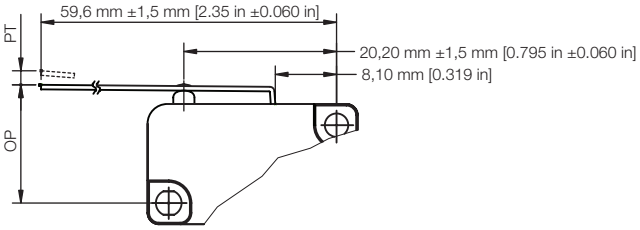

Figure 22. V15 Series A04/Simulated Roller Lever

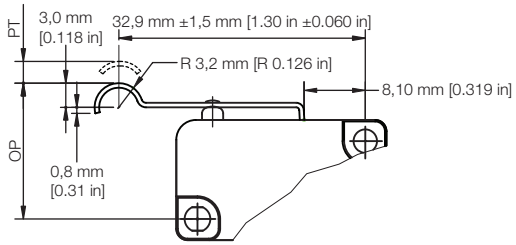

Figure 23. V15 Series A05/Short Roller Lever

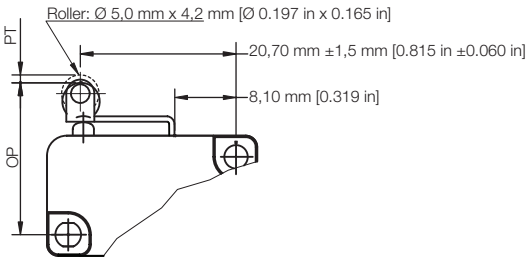

Figure 24. V15 Series A06/Roller Lever

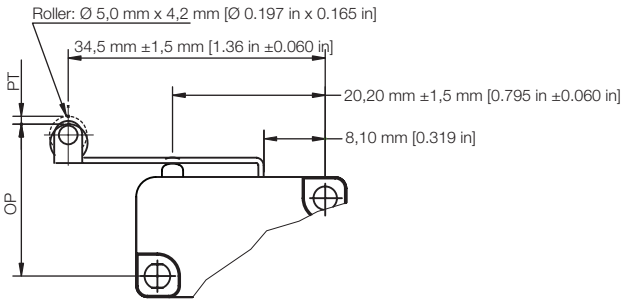

NOTE: These dimensions apply for the "A" lever position. For the "B" lever position, please add 5,7 mm [0.224 in].

Position A

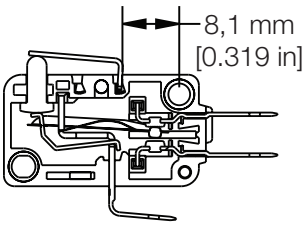

Position B

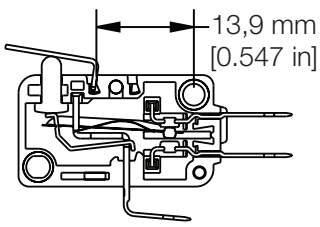

HONEYWELL UNSEALED V BASIC PORTFOLIO			
	V7	**V15**	**V19**
Target Market	Applications requiring precision, long term reliability, and design flexibility in electrical ratings	Cost sensitive applications requiring configurability in actuation, termination, and operating characteristics	Applications in major and small appliances or designs that require simple configurations
Differentiator	Wide range of max operating force and precise differential travel specs key for a more accurate switch actuation	Industry standard switch footprint and global certifications ideal for "low-cost-of-failure" applications	Provides balance between cost and performance in high-volume switch applications
Options	**MIL-PRF-8805 listings available** V3 family designed for rugged applications where reliability and repeatability is key	**Multiple Contact Material Options** Contact variants to enable design and regulation compliance	**RAST Termination** Multiple RAST standard terminal options for optimizing automated manufacturing processes

RELATED DOCUMENTATION

- V Basics Range Guide
- Applying Precision Switches
- V7 Datasheet
- V15 Datasheet
- Product application-specific information
  - Application note: Electronic sensors and electromechanical switches in valves and flow meters
  - Application note: Electronic sensors and MICRO SWITCH switches in industrial air compressors
  - Application note: Sensors and switches for potential HVAC/R applications
  - Application note: Sensors and switches for valve monitors and valve indicators
  - Application note: Sensors and switches in sanitary valves
  - Case study: Switching it up
  - Technical bulletin: Applying precision switches

WARRANTY/REMEDY

Honeywell warrants goods of its manufacture as being free of defective materials and faulty workmanship during the applicable warranty period. Honeywell's standard product warranty applies unless agreed to otherwise by Honeywell in writing; please refer to your order acknowledgment or consult your local sales office for specific warranty details. If warranted goods are returned to Honeywell during the period of coverage, Honeywell will repair or replace, at its option, without charge those items that Honeywell, in its sole discretion, finds defective. **The foregoing is buyer's sole remedy and is in lieu of all other warranties, expressed or implied, including those of merchantability and fitness for a particular purpose. In no event shall Honeywell be liable for consequential, special, or indirect damages.**

While Honeywell may provide application assistance personally, through our literature and the Honeywell web site, it is buyer's sole responsibility to determine the suitability of the product in the application.

Specifications may change without notice. The information we supply is believed to be accurate and reliable as of this writing. However, Honeywell assumes no responsibility for its use.

⚠ WARNING
IMPROPER INSTALLATION

- Consult with local safety agencies and their requirements when designing a machine-control link, interface and all control elements that affect safety.
- Strictly adhere to all installation instructions.

Failure to comply with these instructions could result in death or serious injury.

⚠ WARNING
MISUSE OF DOCUMENTATION

- The information presented in this product sheet is for reference only. Do not use this document as a product installation guide.
- Complete installation, operation, and maintenance information is provided in the instructions supplied with each product.

Failure to comply with these instructions could result in death or serious injury.

Honeywell
Advanced Sensing Technologies
830 East Arapaho Road
Richardson, TX 75081
sensing.honeywell.com

004945-15-EN | 15 | 07/22
© 2022 Honeywell International Inc. All rights reserved.

Honeywell