# TRS5-30BCR01

Aliases (USEE30BCR01000)

KEMET, TRS, Thermal Reed Switch, Axial, 2.5C Temperature Accuracy, High Reliability, High-Speed Response, Long Operational Life, Excellent Environmental Durability, High Temperature Accuracy, 30°C, Break

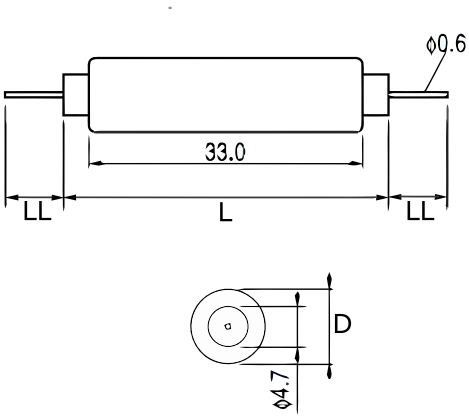


Click here for the 3D model.

| General Information | |
|---|---|
| Series | TRS |
| Type | Thermal Reed Switch |
| Style | Axial |
| Description | Thermal Reed Switch |
| Features | High Reliability, High-Speed Response, Long Operational Life, Excellent Environmental Durability, High Temperature Accuracy |
| Lead | Wire Leads |
| RoHS | Yes |
| REACH | Yes |

| Dimensions | |
|---|---|
| D | 7mm NOM |
| L | 40mm NOM |
| LL | 8.5mm NOM |

| Packaging Specifications | |
|---|---|
| Packaging | Tray, Box |
| Packaging Quantity | 600 |
| Typical Component Weight | 3.1 g |

| Specifications | |
|---|---|
| Switching Temp. | 30C +/-2.5C |
| Temperature Range | -20/+130°C |
| Contact Type | Break |
| Voltage DC | 200 VDC MAX (Opening/Closing), 1500 VAC/1 minute or 1800 VAC/1 second |
| Current | 0.55 Amps AC/DC MAX (Opening/Closing), 1 mAmps MIN (5VDC, Opening/Closing) |
| ESR | 150 mOhms MAX (Contact Resistance) |
| Max Opening/Closing Power | 60.5 (AC/DC); 10 (DC) |
| Max Opening/Closing Voltage | 140 (AC); 200 (DC) |
| Differential Temperature | 10C Maximum |

Statements of suitability for certain applications are based on our knowledge of typical operating conditions for such applications, but are not intended to constitute - and we specifically disclaim - any warranty concerning suitability for a specific customer application or use. This Information is intended for use only by customers who have the requisite experience and capability to determine the correct products for their application. Any technical advice inferred from this Information or otherwise provided by us with reference to the use of our products is given gratis, and we assume no obligation or liability for the advice given or results obtained.



© 2006 - 2026 YAGEO