UEI15 Series

Isolated Wide Input Range 15-Watt DC-DC Converters

Murata Power Solutions

Typical unit

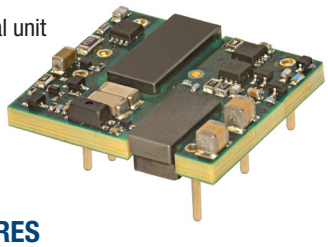

Featuring a full 15 Watt or greater output in one square inch of board area, the UEI series isolated DC/DC converter family offers efficient regulated DC power for printed circuit board mounting.

FEATURES

- Small footprint DC/DC converter, ideal for high current applications
- Industry standard 0.96" x 1.1" X 0.33" open frame package and pinout
- Wide range input voltages 9-36 and 18-75 Vdc
- Assembly and attachment for RoHS standards
- Isolation up to 2250 VDC (basic)
- Up to 15 Watts or greater total output power with overtemperature shutdown
- High efficiency synchronous rectifier forward topology
- Stable operation with no required external components
- Usable -40 to 85°C temperature range (with derating)
- Certified to UL 62368-1, CAN/CSA C22.2 No. 62368-1-14, IEC 62368-1:2014 safety approvals
- Extensive self-protection shut down features

PRODUCT OVERVIEW

Wide range 4:1 inputs on the 0.96" x 1.1" x 0.33" converter are either 9 to 36 Volts DC (Q12 models) or 18 to 75 Volts DC (Q48 models), ideal for battery-powered and telecom equipment. The industry-standard pinout fits larger 1" x 2" converters. Fixed output voltages from 3.3 VDC to 15 VDC are regulated to within ±0.2% or less and may be trimmed within ±10% of nominal output. Applications include small instruments, area-limited micro-controllers, computer-based systems, data communications equipment, remote sensor systems, vehicle and portable electronics.

The UEI 15W series includes full magnetic and optical isolation up to 2250 Volts DC (basic insulation). For connection to digital systems, the outputs offer fast settling to current step loads and tolerance of higher capacitive loads. Excellent ripple and noise specifications assure compatibility to circuits using CPU's, ASIC's, programmable logic and FPGA's. For systems requiring controlled startup/shutdown, an external switch, transistor or digital logic may be used to activate the remote On/Off control.

A wealth of self-protection features avoid both converter and external circuit problems. These include input undervoltage lockout and overtemperature shutdown. The outputs current limit using the "hiccup" autorestart technique and the outputs may be short-circuited indefinitely. Additional features include output overvoltage and reverse conduction elimination.

The high efficiency offers minimal heat buildup and "no fan" operation.

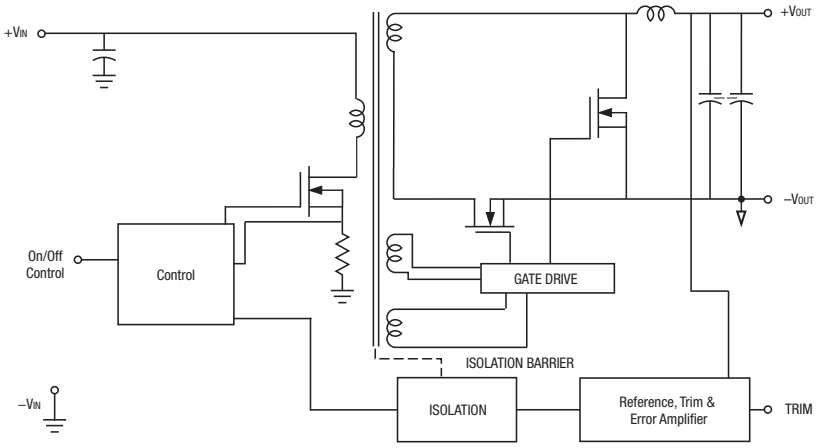

Figure 1. Simplified block diagram—3.3V and 5VOUT models only. Typical topology is shown.

For full details go to www.murata-ps.com/rohs

PERFORMANCE SPECIFICATIONS SUMMARY AND ORDERING GUIDE ①

Root Models ①	Output							Input				Efficiency		Open Frame Package – C75	
	V_{OUT} (V)	I_{OUT} (A)③	Power (W)	R/N (mVp-p) ② Typ.	R/N (mVp-p) ② Max.	Regulation (Max.) Line	Regulation (Max.) Load	V_{IN} Nom. (V)	Range (V)	I_{IN} = no load (mA)	I_{IN} = full load (A)	Min.	Typ.	(mm)	Case Pinout
UEI15-033-Q12	3.3	4.5	14.85	60	90	±0.05%	±0.1%	24	9-36	43	0.71	86.5%	89%	27.9×24.4×8.4	P85
UEI15-033-Q48	3.3	5	16.5	60	90	±0.2%	±0.2%	48	18-75	24	0.4	85.5%	88%		
UEI15-050-Q12	5	3	15	70	125	±0.05%	±0.075%	24	9-36	41	0.72	86.3%	87.3%		
UEI15-050-Q48	5	3	15	60	95	±0.05%	±0.06%	48	18-75	28	0.36	84.3%	86.0%		
UEI15-120-Q12	12	1.3	15.6	110	150	±0.05%	±0.05%	24	9-36	15	0.77	82.3%	84.5%		
UEI15-120-Q48	12	1.3	15.6	85	120	±0.0 75%	±0.05%	48	18-75	15	0.38	83.3%	85%		
UEI15-150-Q12	15	1.1	16.5	130	175	±0.05%	±0.05%	24	9-36	18	0.81	83.5%	85%		
UEI15-150-Q48	15	1.1	16.5	80	120	±0.05%	±0.05%	48	18-75	14	0.4	83.3%	85.3%		

① Please refer to the part number structure for additional options and complete ordering part numbers.
② All specifications are typical at nominal line voltage and full load, +25 deg.C. unless otherwise noted. See detailed specifications.
③ Minimum output load for all models is 10% of maximum current.
④ RoHS-6 compliance does not claim EU RoHS exemption 7b (lead in solder).

PART NUMBER STRUCTURE

UEI15 - 033 - Q12 P M H Lx - C Refer to the back page model specific availability

Unipolar Wide Input 15-Watt Series

Nominal Output Voltage in Tenths of a Volt

Input Voltage Range
Q12 = 9-36V
Q48 = 18-75V

On/Off Control Logic:
P = Positive
N = Negative

Surface Mount Option
Blank = Standard through-hole pin mount version
M = SMT version (MSL rating 2) ②

Conformal Coating Option
Blank = No coating, standard
H = Coating added, optional
(Built to order; contact Murata Power Solutions for MOQ and lead times.
Not available on SMT models.)

Pin Length Option
Blank = Std. pin length 0.25″ (6.3mm)
L1 = 0.110″ (2.79mm) ①
L2 = 0.145″ (3.68mm) ①

RoHS-6 Hazardous Substance Compliance (note 4)

① **Special quantity order is required; samples available with standard pin length only.**
② **SMT (M) versions not available in sample quantities.**
③ **Some model number combinations may not be available. See website or contact your local Murata sales representative.**

SPECIAL CUSTOMER CONFIGURATION PART NUMBERS:

1) UEI-31204-C (Restricted AVL and surface mount package)
2) UEI15-050-Q12PH-31331 (5Vout @ 15W, Positive Logic, Conformal Coating, Hi-pot Tested to 2,000Vrms)
Conformal Coating, Hi-pot Tested to 2,000Vrms)

FUNCTIONAL SPECIFICATIONS

INPUT CHARACTERISTICS

Model Family	Start-up threshold V	Under-voltage Shut-down V	Reflected (back) Ripple Current mA pk-pk	Input Current: Inrush Transient A²sec	Input Current: Min. Load mA	Input Current: Output Short Circuit mA	Input Current: Low Line A	Input Current: Standby Mode mA	Recom-mended Fast-blow Fuse A	Internal Input Filter Type	Reverse Polarity Protec-tion	Remote On/Off Control: On/Off Current mA	Remote On/Off Control: Positive Logic blank model suffix	Remote On/Off Control: Negative Logic "N" model suffix
UEI15-033-Q12	9.1⑱	8.6	30	0.05	100	50	1.86	1	4	C	None. Install external fuse. See note 15.	1	OFF=Gnd pin or –0.7 to +0.7V max. ON=open pin or +10 to +15V max.	OFF=open pin or +10 to + 15V max. ON=Gnd pin or –0.7 to +0.8V max.
UEI15-033-Q48	16.7	15.6			65		1.03		2					
UEI15-050-Q12	9.5⑱	8.5			105		1.90		4					
UEI15-050-Q48	16.7	15.6			60		0.96		2	L				
UEI15-120-Q12	9.5⑱	8.4			110		2.04		4	C				
UEI15-120-Q48	16.7	15.6			56		1.02		1.5					
UEI15-150-Q12	9.5⑱	8.4			130		2.13		4					
UEI15-150-Q48	16.7	16.2			60		1.06		2					

OUTPUT CHARACTERISTICS

Model Family	I_{OUT} ⑱ Max. mA	V_{OUT} Accuracy 50% Load % of V_{NOM}	Adjustment Range % of V_{NOM}	Temperature Coefficient % of V_{OUT} /°C	Capacitive Loading Max. Low ESR <0.02Ω Max, µF	Overvoltage protection V	OV protection method	Voltage Out-put Range	Ripple/Noise (20 MHz bandwidth)[8]	Line/Load Regulation	Efficiency
UEI15-033-Q12	See Ordering Guide (Minimum load is 10% of Imax)	±1	±10⑰	±0.02	1,000	4.5	Magnetic feedback	See ordering guide			
UEI15-033-Q48						3.9					
UEI15-050-Q12						5.9					
UEI15-050-Q48					470	5.9					
UEI15-120-Q12					1,000	14.1					
UEI15-120-Q48					470	15					
UEI15-150-Q12						19.5					
UEI15-150-Q48						20					

ISOLATION CHARACTERISTICS

Model Family	Input to Output Min. Vdc	Isolation Resistance Min. MΩ	Isolation Capacitance pF	Isolation Safety Rating
UEI15-033-Q12	2000	10	1000	Basic insulation
UEI15-033-Q48	2250	10	1500	
UEI15-050-Q12	2000	10	1500	
UEI15-050-Q48	2250	10	1000	
UEI15-120-Q12	2000	10	1000	
UEI15-120-Q48	2250	10	1000	
UEI15-150-Q12	2000	10	1500	
UEI15-150-Q48	2250	10	1000	

DYNAMIC CHARACTERISTICS

Model Family	Dynamic Load Response (50-75-50% load step) µSec to 1% V_{OUT} ①	Peak Deviation mV	Start-up Time: V_{IN} to V_{OUT} regulated (Max.) mSec	Start-up Time: Remote On/Off to V_{OUT} regulated max.) mSec	Switching Frequency KHz
UEI15-033-Q12	150	±125	50	50	350
UEI15-033-Q48	100	±35			350
UEI15-050-Q12		±60			350
UEI15-050-Q48		±30			375
UEI15-120-Q12	150	±150			340
UEI15-120-Q48	100	±200			350
UEI15-150-Q12		±125			340
UEI15-150-Q48		±175			380

MISCELLANEOUS CHARACTERISTICS

Model Family	Current Limit Inception 98% of Vout, after warmup A	Short Circuit Protection Method	Short Circuit Current A	Short Circuit Duration (output shorted to ground)①	Pre-biased setup	Calculated MTBF Hours ④	Operating Temperature Range: See Derating Curves	Storage Temperature Range °C	Thermal protection/ shutdown °C
UEI15-033-Q12	6.0	Current limiting, hiccup autorestart	0.3	Continuous	Monotonic	2×10^6	–40 to +85°C	–55 to +125 °C	115
UEI15-033-Q48	7.2					3.49×10^6			
UEI15-050-Q12	4.6					2×10^6			
UEI15-050-Q48	4.5								
UEI15-120-Q12	2.0								
UEI15-120-Q48	1.8					4.1×10^6			135
UEI15-150-Q12	1.6					2.1×10^6			115
UEI15-150-Q48	1.7					2×10^6			

①Remove overload for recovery.

ABSOLUTE MAXIMUM RATINGS			
Input Voltage	Q12 models	Volts Max. continuous	36 VDC
		Volts, transient 100mS	50 VDC
	Q48 models	Volts Max. continuous	75 VDC
		Volts, transient 100mS	100 VDC
On/Off control, referred to –V_{IN}		Volts, Min.	–0.3
		Volts, Max.	15
Input Reverse Polarity Protection			See fuse section
Output Overvoltage, Volts Max.			V_{OUT} nom. +20%
Output Current, sustained short circuit			Current-limited, see specs
Storage Temperature		Range, Min. ºC	-55
		Max. ºC	+125

Absolute Maximum Ratings

Absolute maximums are stress ratings. Exposure of devices to greater than any of these conditions may adversely affect long-term reliability. Proper operation under conditions other than those listed in the Performance/Functional Specifications is neither implied nor recommended.

SPECIFICATION NOTES

(1) All models are tested and specified with external capacitors listed in the table below. The external capacitors listed below are ONLY for establishing test specifications. They are required for our test fixtures and equipment. Your application may not need them. The converter is stable with no external capacitors but Murata Power Solutions strongly recommends external caps. All caps are low-ESR types. Where two or more capacitors are listed, these are connected in parallel. All caps should mount close to the DC/DC using short leads.

All specifications are typical unless noted. General conditions for Specifications are +25 deg.C, V_{IN}=nominal, V_{OUT}=nominal, full load. Adequate airflow must be supplied for extended testing under power.

(2) Input Ripple Current is tested and specified over a 5 Hz to 20 MHz bandwidth. Input filtering is C_{IN}=33 µF, 100V tantalum, C_{BUS}=220 µF, 100V electrolytic, L_{BUS}=12 µH.

(3) Note that Maximum Power Derating curves indicate an average current at nominal input voltage. At higher temperatures and/or lower airflow, the DC/DC converter will tolerate brief full current outputs if the total RMS current over time does not exceed the Derating curve. All Derating curves are presented at sea level altitude. Be aware of reduced power dissipation with increasing density altitude.

INPUT/OUTPUT EXTERNAL TEST CAPACITORS		
Model	Input Capacitor	Output Capacitor(s)
UEI15-033-Q12	100 µF	1 µF & 10 µF
UEI15-033-Q48	4.7 µF ceramic	1 µF & 10 µF
UEI15-050-Q12	100 µF	1 µF & 10 µF
UEI15-050-Q48	4.7 µF ceramic	1 µF & 10 µF
UEI15-120-Q12	100 µF	1 µF & 10 µF
UEI15-120-Q48	4.7 µF ceramic	1 µF & 10 µF
UEI15-150-Q12	100 µF	1 µF & 10 µF
UEI15-150-Q48	4.7 µF ceramic	1 µF & 10 µF

(4) Mean Time Before Failure is calculated using the Telcordia (Belcore) SR-332 Method 1, Case 3, ground fixed conditions, Tpcboard=+25 deg.C, full load, natural air convection.

(5) The On/Off Control is normally controlled by a switch. But it may also be driven with external logic or by applying appropriate external voltages which are referenced to Input Common. The On/Off Control Input should use either an open collector or open drain transistor.

(6) Output current limiting begins when the output voltage degrades approximately 2% from the selected setting.

(7) The outputs are not intended to sink appreciable reverse current. This may damage the outputs.

(8) Output noise may be further reduced by adding an external filter. See I/O Filtering and Noise Reduction.

(9) All models are fully operational and meet published specifications, including "cold start" at –40°C.

Root Models	Conditions	Minimum	Typical	Maximum	Units
All UEI15 Q12	Start up at –40°C	10	10.5	11	Vdc

(10) Regulation specifications describe the deviation as the line input voltage or output load current is varied from a nominal midpoint value to either extreme.

(11) The output overvoltage protection is automatic recovery after fault removal. The overvoltage may occur either from internal failure or from an external forcing voltage as in a shared power system.

(12) Output current limit and short circuit protection is non-latching. When the overcurrent fault is removed, the converter will immediately recover.

(13) Do not exceed maximum power specifications when adjusting the output trim.

(14) At zero output current, the output may contain low frequency components which exceed the ripple specification. The output may be operated indefinitely with no load.

(15) If reverse polarity is accidentally applied to the input, to ensure reverse input protection with full output load, always connect an external input **fuse** in series with the +V_{IN} input. Use approximately twice the full load input current rating at minimum input voltage.

(16) "Hiccup" operation repeatedly attempts to restart the converter with a brief, full-current output. If the overcurrent condition still exists, the restart current will be removed and then tried again. This short current pulse prevents overheating and damaging the converter. Once the fault is removed, the converter immediately recovers normal operation.

(17) On model UEI15-050-Q48, if V_{IN} <20V, output trim may only be adjusted downwards from +5.0V (more negative).

(18) Typical values shown. For minimum and maximum values see table below.

Root Models	Conditions	Minimum	Maximum	Units
All UEI15 Q12	@+25°C	8.8	10	Vdc

CAUTION: This product is not internally fused. To comply with safety agency certifications and to avoid injury to personnel or equipment, the user **must** connect an external fast-blow fuse to the input terminals. See fuse information.

(19) All models require 10% of Imax minimum output load to meet specifications. However, they will not be damaged at zero output load.

PERFORMANCE DATA

UEI15-033-Q12

Efficiency vs. Line Voltage and Load Current @ 25°C

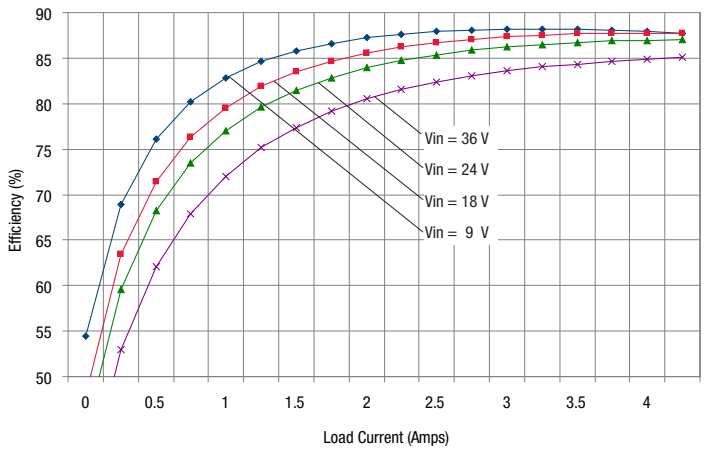

Maximum Current Temperature Derating @sea level
(V_{IN} = 12V or 24V, airflow from input to output)

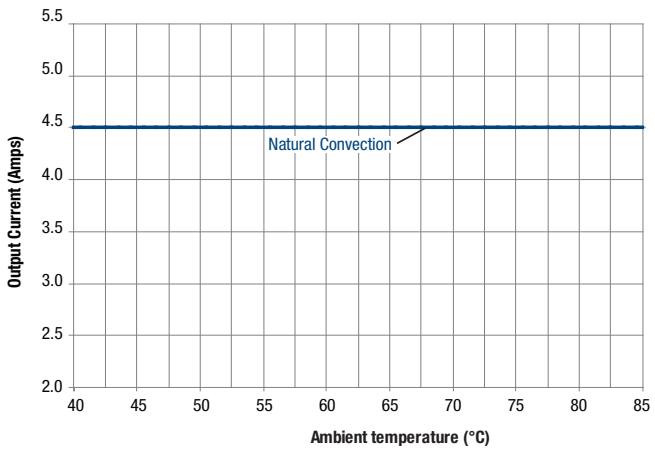

UEI15-033-Q48

Efficiency vs. Line Voltage and Load Current @ 25°C

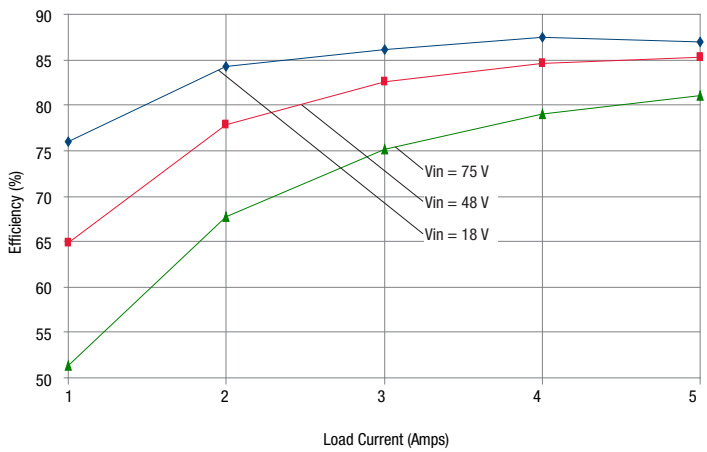

Maximum Current Temperature Derating @sea level
(V_{IN} = 24V, airflow from input to output)

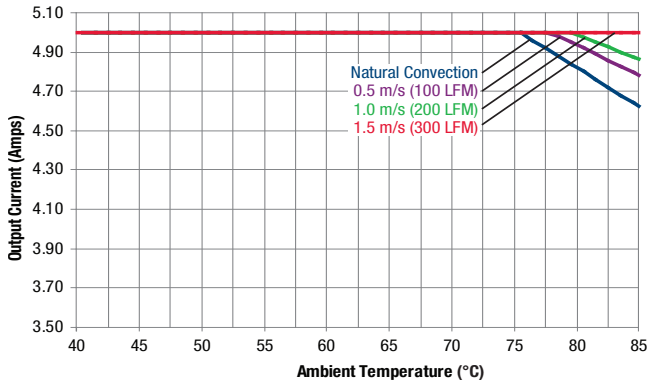

UEI15-033-Q48

Maximum Current Temperature Derating @sea level
(V_{IN} = 48V, airflow from input to output)

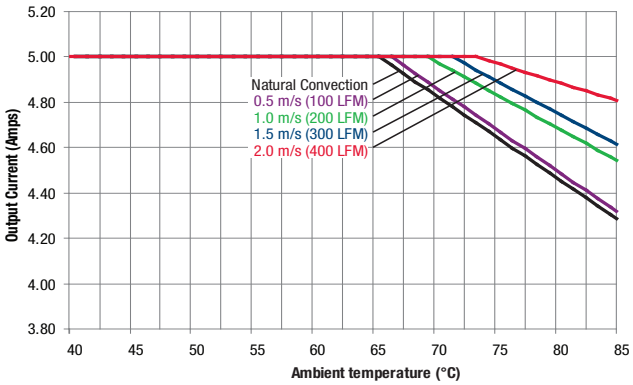

PERFORMANCE DATA

UEI15-050-Q12

Efficiency vs. Line Voltage and Load Current @ 25°C

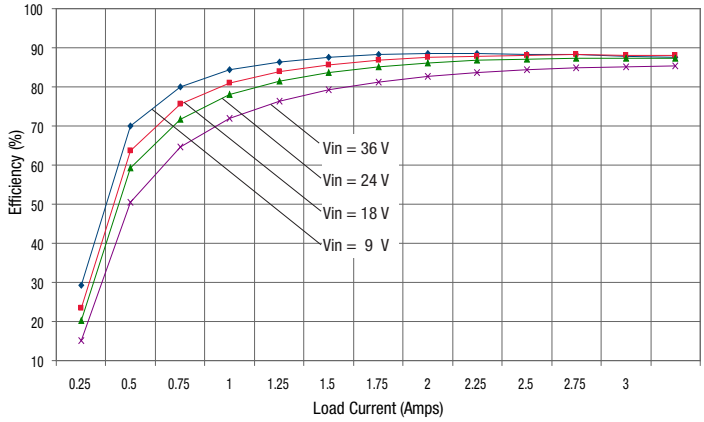

Maximum Current Temperature Derating @Sea Level
(V_{IN} = 24V, airflow is from pin 1 to pin 3)

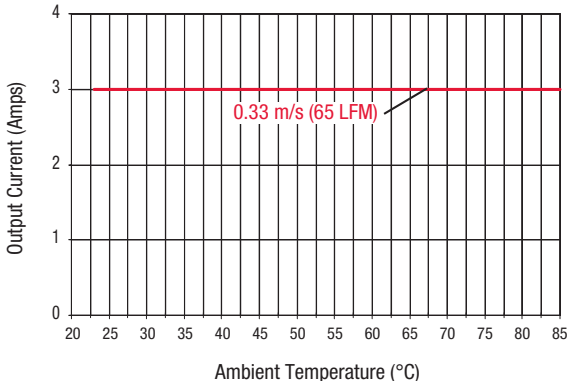

UEI15-050-Q48

Efficiency vs. Line Voltage and Load Current @ 25°C

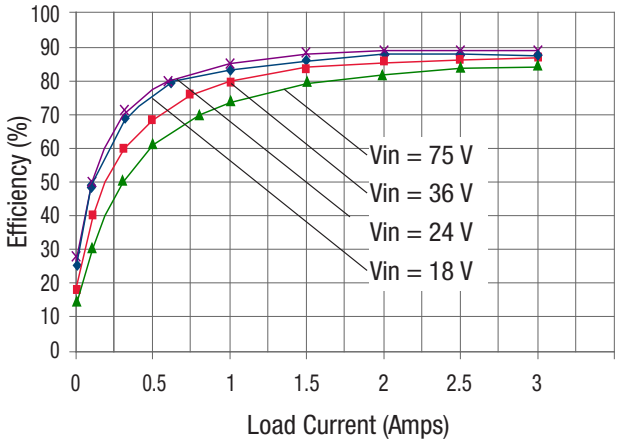

Maximum Current Temperature Derating @Sea Level
(V_{IN} = 24V or 48V, airflow is from input to output)

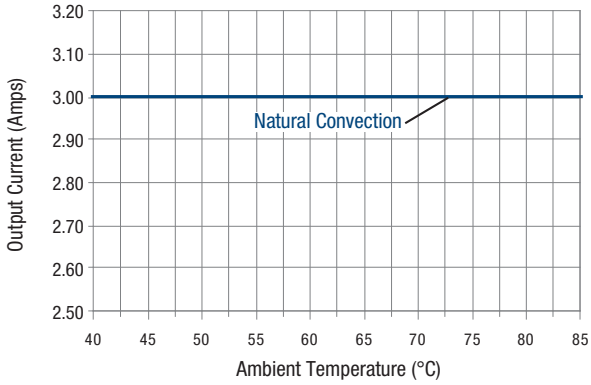

UEI15-120-Q12

Efficiency vs. Line Voltage and Load Current @ 25°C

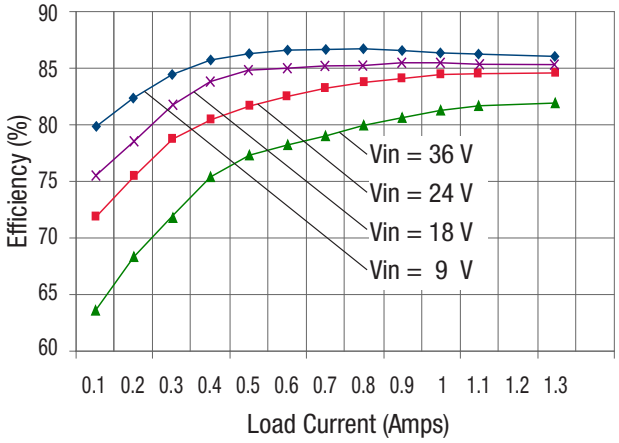

Maximum Current Temperature Derating @Sea Level
(V_{IN} = 24V, airflow is from pin 1 to pin 3)

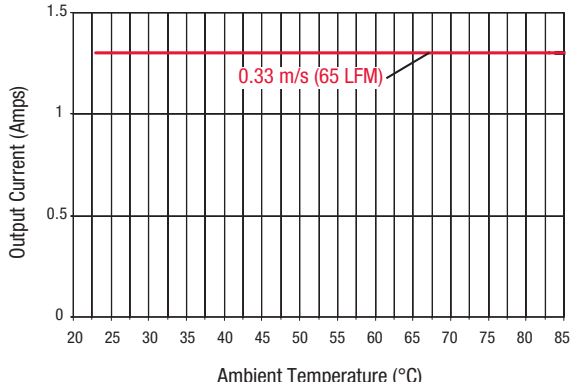

PERFORMANCE DATA

UEI15-120-Q48

Efficiency vs. Line Voltage and Load Current @ 25°C

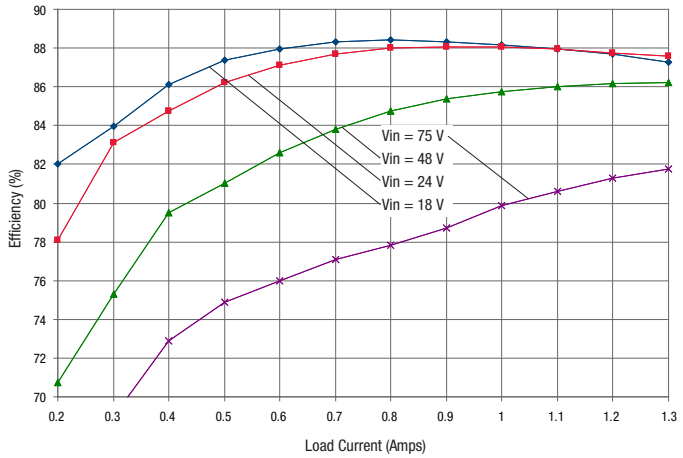

Maximum Current Temperature Derating @Sea Level
(V_{IN} = 24V or 48V, airflow is from pin 2 to pin 1)

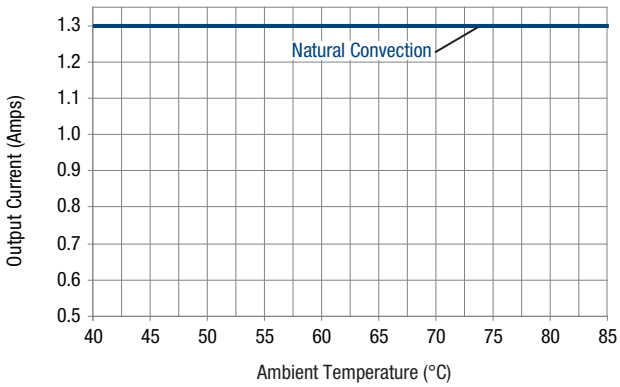

UEI15-150-Q12

Efficiency vs. Line Voltage and Load Current @ 25°C

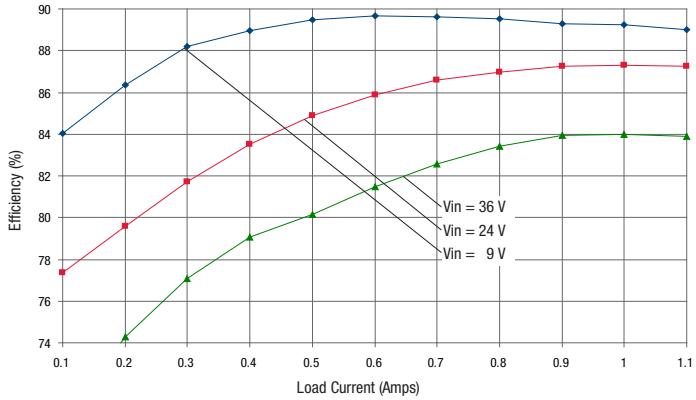

Maximum Current Temperature Derating @Sea Level
(V_{IN} = 12V and 24V, airflow is from input to output)

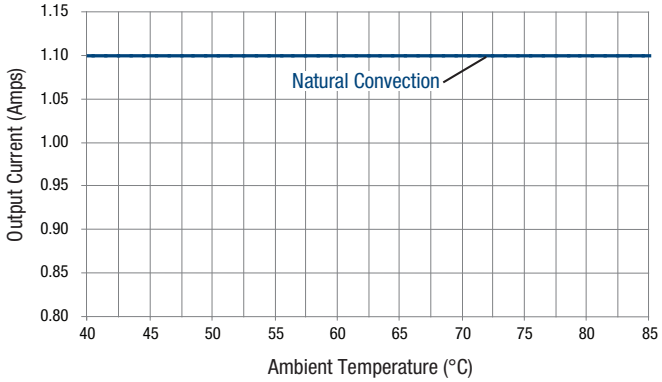

UEI15-150-Q48

Efficiency vs. Line Voltage and Load Current @ 25°C

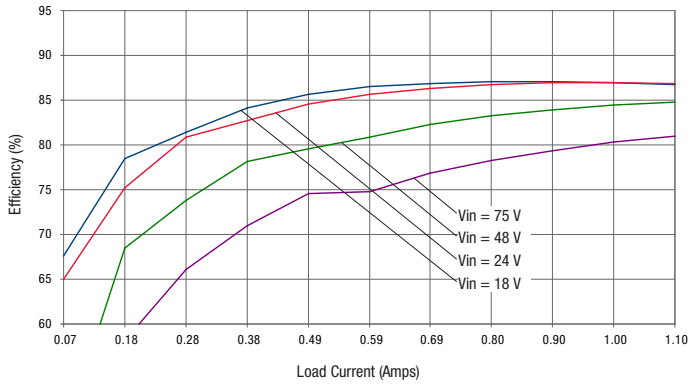

Maximum Current Temperature Derating @Sea Level
(V_{IN} = 24V and 48V, airflow is from input to output)

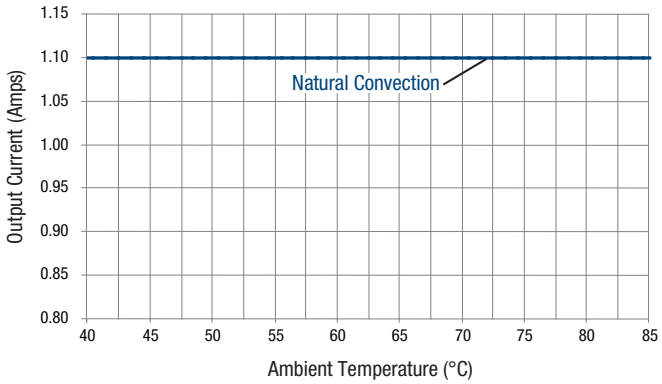

MECHANICAL SPECIFICATIONS, OPEN FRAME

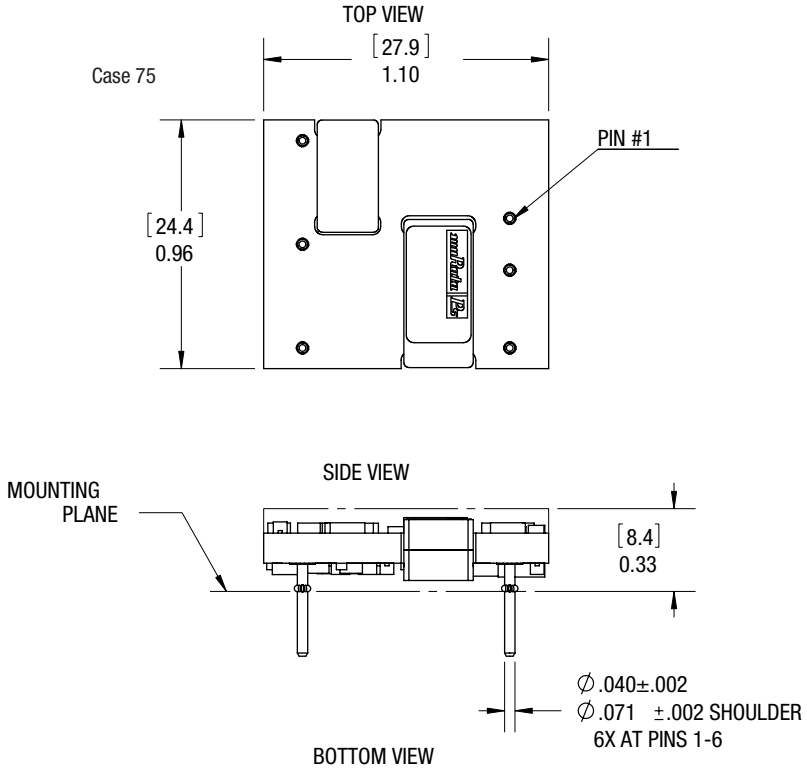

PHYSICAL CHARACTERISTICS		
Pin Material	Copper alloy	
Pin Diameter	0.04″ (1.016mm)	
Pin Finish	Gold plate	
Through Hole Pin Material	Copper alloy	
TH Pin Plating Metal and Thickness	Nickel subplate	50 µ-inches
	Gold overplate	5 µ-inches
Weight	0.352 oz./10 grams	
Electromagnetic Interference	EN55022/CISPR22 (see note 1) (Requires external filter)	
Flammability Rating	UL 94V-0	
Safety	Certified to UL 62368-1, CAN/CSA C22.2 No. 62368-1-14, IEC 62368-1:2014 safety approvals	

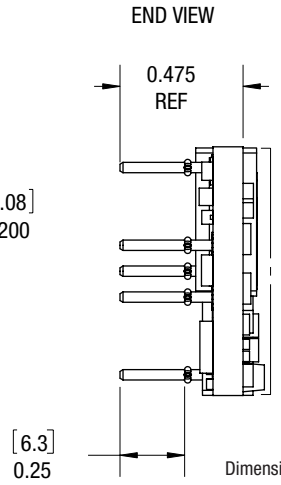

INPUT/OUTPUT CONNECTIONS	
Pin	**Function**
1	+Vin
2	-Vin
3	+Vout
4	Output Trim
5	-Vout
6	On/Off Control*

*The Remote On/Off can be provided with either positive (P suffix) or negative (N suffix) logic

Dimensions are in inches (mm shown for ref. only).

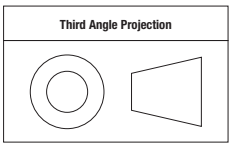

Standard pin length is shown. Please refer to the Ordering Guide for alternate pin lengths.

Tolerances (unless otherwise specified):
.XX ± 0.02 (0.5)
.XXX ± 0.010 (0.25)
Angles ± 1˚

Components are shown for reference only.

SHIPPING TRAYS AND BOXES, THROUGH-HOLE MOUNT

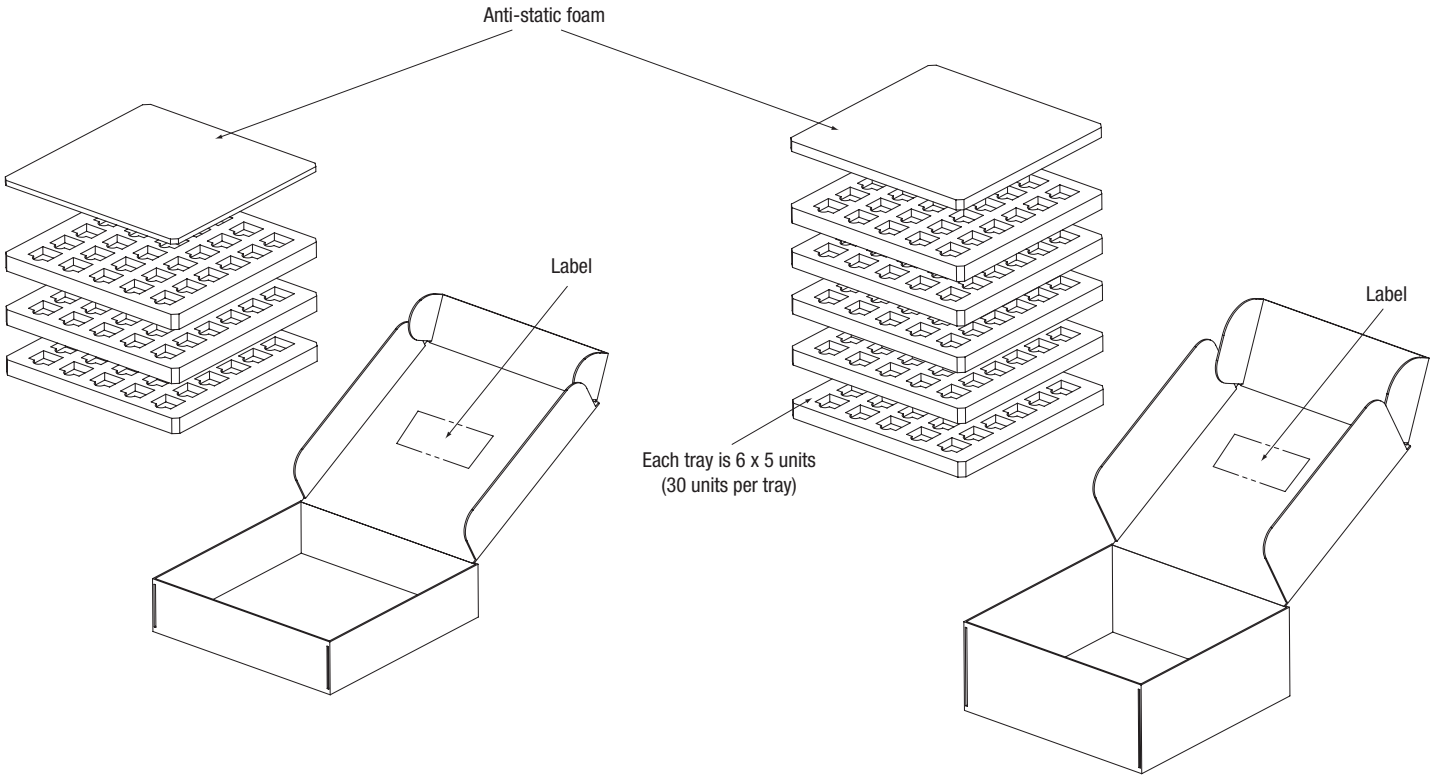

SHIPPING TRAY DIMENSIONS

UEI modules are supplied in a 30-piece (6 x 5) shipping tray. The tray is an anti-static closed-cell polyethylene foam. Dimensions are shown below.

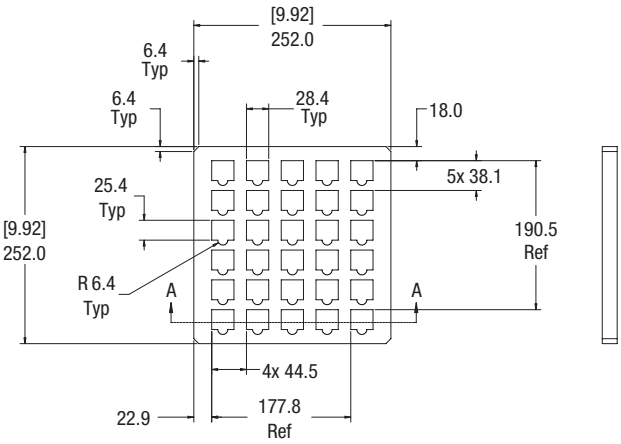

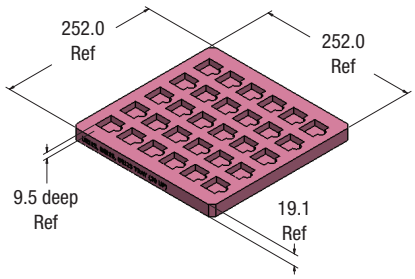

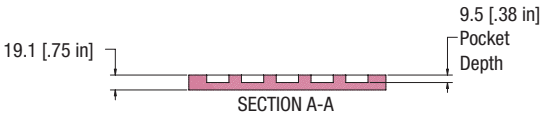

Notes:

1. Material: Dow 220 antistat ethafoam (Density: 34-35 kg/m3)
2. Dimensions: 252 x 252 x 19.1 mm 6 x 5 array (30 per tray)
3. All dimensions in millimeters [inches]
4. Tolerances unless otherwise specified: +1/-0

MECHANICAL SPECIFICATIONS, SURFACE MOUNT PACKAGE (MSL RATING 2)

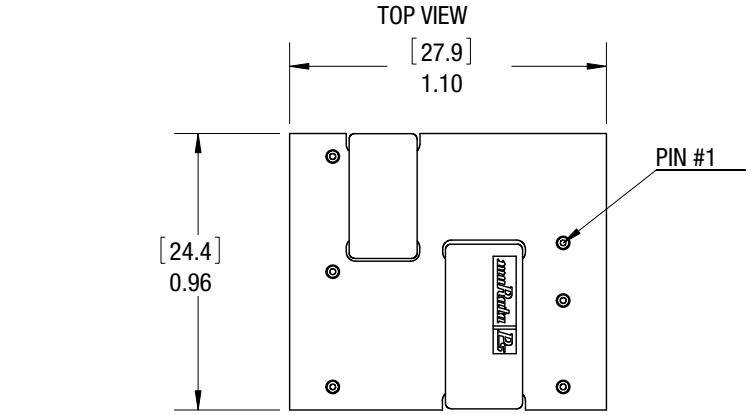

Dimensions are in inches (mm shown for ref. only).

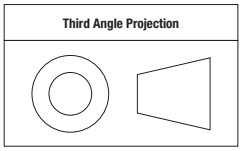

Tolerances (unless otherwise specified):
.XX ± 0.02 (0.5)
.XXX ± 0.010 (0.25)
Angles ± 1˚

Components are shown for reference only.

INPUT/OUTPUT CONNECTIONS

Pin	Function
1	+Vin
2	-Vin
3	+Vout
4	Output Trim
5	-Vout
6	On/Off Control*

*The Remote On/Off can be provided with either positive (P suffix) or negative (N suffix) logic

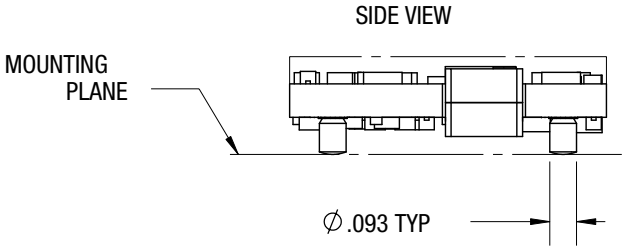

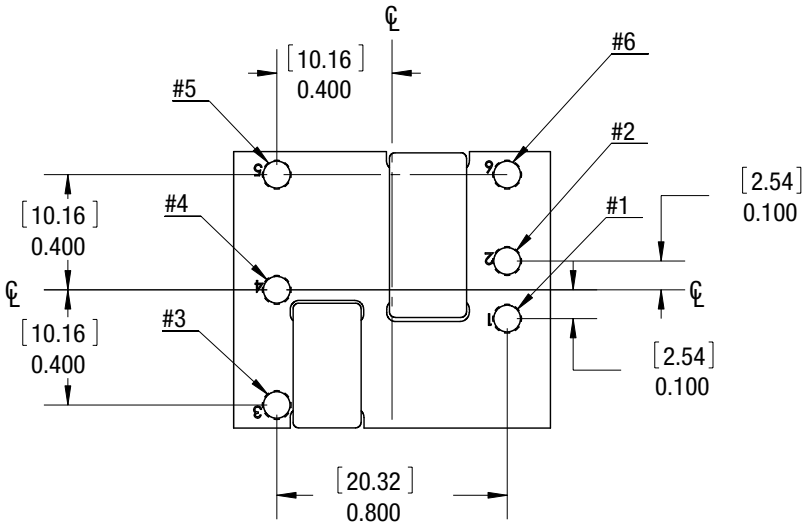

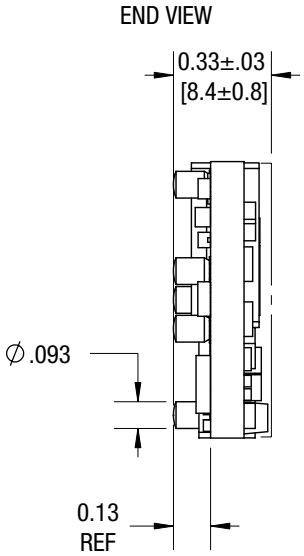

MECHANICAL SPECIFICATIONS, SURFACE MOUNT PACKAGE

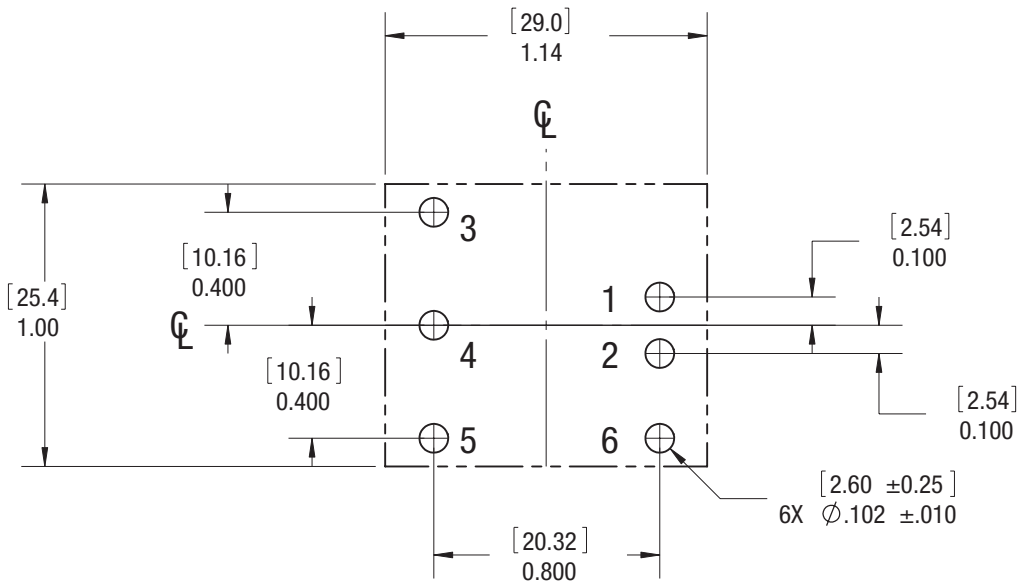

RECOMMENDED SMT PAD LAYOUT

SURFACE MOUNT TAPE AND REEL INFORMATION (MSL RATING 2)

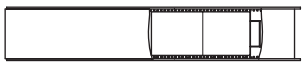

NOTE: The SMT package has an MSL 2 rating.

PACKAGING CONFORMS TO EIA-481
CONVERTERS SHIPPING IN QUANTITIES
OF 100 PER REEL

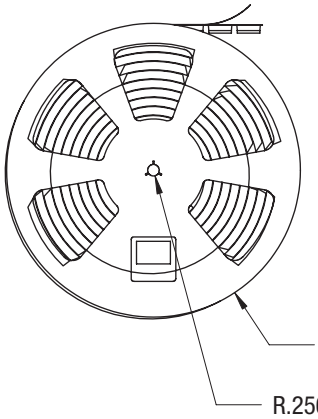

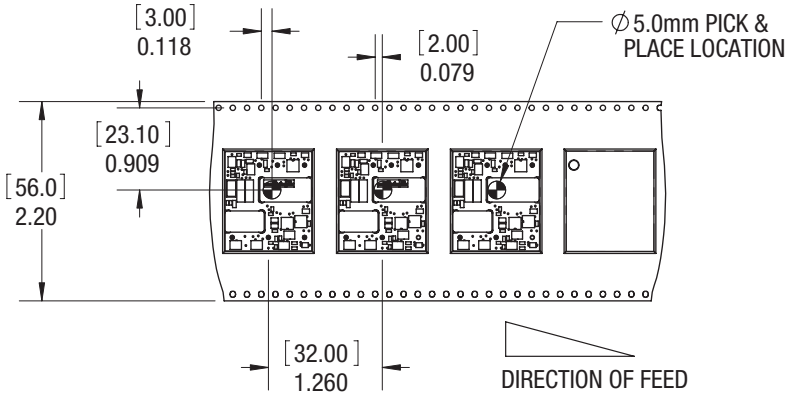

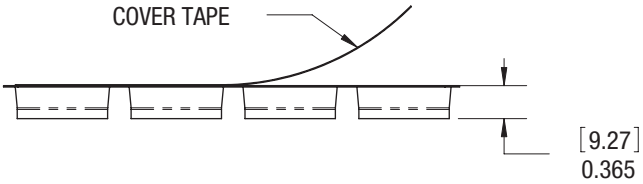

Dimensions in inches [mm]

SURFACE MOUNT TAPE AND REEL

TECHNICAL NOTES

Input Fusing

Certain applications and/or safety agencies may require fuses at the inputs of power conversion components. Fuses should also be used when there is the possibility of sustained input voltage reversal which is not current-limited. For greatest safety, we recommend a fast blow fuse installed in the ungrounded input supply line.

The installer must observe all relevant safety standards and regulations. For safety agency approvals, install the converter in compliance with the applicable end-user safety standards

Input Reverse-Polarity Protection

If the input voltage polarity is reversed, an internal diode will become forward biased and likely draw excessive current from the power source. If this source is not current-limited or the circuit appropriately fused, it could cause permanent damage to the converter.

Input Under-Voltage Shutdown and Start-Up Threshold

Under normal start-up conditions, converters will not begin to regulate properly until the ramping-up input voltage exceeds and remains at the Start-Up Threshold Voltage (see Specifications). Once operating, converters will not turn off until the input voltage drops below the Under-Voltage Shutdown Limit. Subsequent restart will not occur until the input voltage rises again above the Start-Up Threshold. This built-in hysteresis prevents any unstable on/off operation at a single input voltage.

Users should be aware however of input sources near the Under-Voltage Shutdown whose voltage decays as input current is consumed (such as capacitor inputs), the converter shuts off and then restarts as the external capacitor recharges. Such situations could oscillate. To prevent this, make sure the operating input voltage is well above the UV Shutdown voltage AT ALL TIMES.

Start-Up Time

Assuming that the output current is set at the rated maximum, the V_{IN} to V_{OUT} Start-Up Time (see Specifications) is the time interval between the point when the ramping input voltage crosses the Start-Up Threshold and the fully loaded regulated output voltage enters and remains within its specified accuracy band. Actual measured times will vary with input source impedance, external input capacitance, input voltage slew rate and final value of the input voltage as it appears at the converter.

These converters include a soft start circuit to moderate the duty cycle of its PWM controller at power up, thereby limiting the input inrush current.

The On/Off Remote Control interval from On command to V_{OUT} regulated assumes that the converter already has its input voltage stabilized above the Start-Up Threshold before the On command. The interval is measured from the On command until the output enters and remains within its specified accuracy band. The specification assumes that the output is fully loaded at maximum rated current. Similar conditions apply to the On to V_{OUT} regulated specification such as external load capacitance and soft start circuitry.

Input Source Impedance

These converters will operate to specifications without external components, assuming that the source voltage has very low impedance and reasonable input voltage regulation. Since real-world voltage sources have finite impedance, performance is improved by adding external filter components. Sometimes only a small ceramic capacitor is sufficient. Since it is difficult to totally characterize all applications, some experimentation may be needed. Note that external input capacitors must accept high speed switching currents.

Because of the switching nature of DC/DC converters, the input of these converters must be driven from a source with both low AC impedance and adequate DC input regulation. Performance will degrade with increasing input inductance. Excessive input inductance may inhibit operation. The DC input regulation specifies that the input voltage, once operating, must never degrade below the Shut-Down Threshold under all load conditions. Be sure to use adequate trace sizes and mount components close to the converter.

I/O Filtering, Input Ripple Current and Output Noise

All models in this converter series are tested and specified for input reflected ripple current and output noise using designated external input/output components, circuits and layout as shown in the figures below. External input capacitors (Cin in the figure) serve primarily as energy storage elements, minimizing line voltage variations caused by transient IR drops in the input conductors. Users should select input capacitors for bulk capacitance (at appropriate frequencies), low ESR and high RMS ripple current ratings. In the figure below, the Cbus and Lbus components simulate a typical DC voltage bus. Your specific system configuration may require additional considerations. Please note that the values of Cin, Lbus and Cbus will vary according to the specific converter model.

In critical applications, output ripple and noise (also referred to as periodic and random deviations or PARD) may be reduced by adding filter elements such as multiple external capacitors. Be sure to calculate component temperature rise from reflected AC current dissipated inside capacitor ESR.

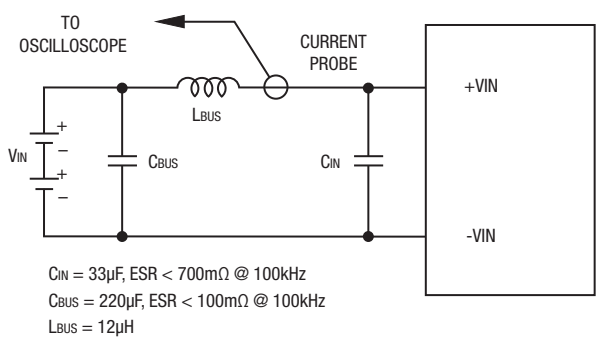

Figure 2. Measuring Input Ripple Current

Floating Outputs

Since these are isolated DC/DC converters, their outputs are “floating” with respect to their input. The essential feature of such isolation is ideal ZERO CURRENT FLOW between input and output. Real-world converters however do exhibit tiny leakage currents between input and output (see Specifications). These leakages consist of both an AC stray capacitance coupling component

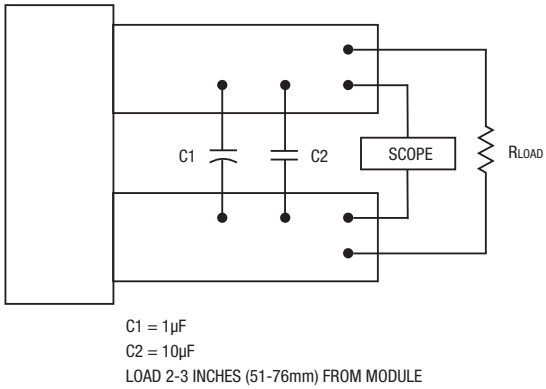

Figure 3. Measuring Output Ripple and Noise (PARD)

and a DC leakage resistance. When using the isolation feature, do not allow the isolation voltage to exceed specifications. Otherwise the converter may be damaged. Designers will normally use the negative output (-Output) as the ground return of the load circuit. You can however use the positive output (+Output) as the ground return to effectively reverse the output polarity.

Minimum Output Loading Requirements

These converters employ a synchronous rectifier design topology. Models UEI15-033-Q12, UEI15-120-Q12, and UEI15-050-Q12 require 10% minimum load to meet specifications. Operation under less than 10% load may slightly increase regulation, ripple, and noise.

Thermal Shutdown

To prevent many over temperature problems and damage, these converters include thermal shutdown circuitry. If environmental conditions cause the temperature of the DC/DC's to rise above the Operating Temperature Range up to the shutdown temperature, an on-board electronic temperature sensor will power down the unit. When the temperature decreases below the turn-on threshold, the converter will automatically restart. There is a small amount of hysteresis to prevent rapid on/off cycling.

CAUTION: If you operate too close to the thermal limits, the converter may shut down suddenly without warning. Be sure to thoroughly test your application to avoid unplanned thermal shutdown.

Temperature Derating Curves

The graphs in this data sheet illustrate typical operation under a variety of conditions. The Derating curves show the maximum continuous ambient air temperature and decreasing maximum output current which is acceptable under increasing forced airflow measured in Linear Feet per Minute ("LFM"). Note that these are AVERAGE measurements. The converter will accept brief increases in temperature and/or current or reduced airflow as long as the average is not exceeded.

Note that the temperatures are of the ambient airflow, not the converter itself which is obviously running at higher temperature than the outside air. Also note that "natural convection" is defined as very flow rates which are not using fan-forced airflow. Depending on the application, "natural convection" is usually about 30-65 LFM but is not equal to still air (0 LFM).

MPS makes Characterization measurements in a closed cycle wind tunnel with calibrated airflow. We use both thermocouples and an infrared camera system to observe thermal performance. As a practical matter, it is quite difficult to insert an anemometer to precisely measure airflow in most applications. Sometimes it is possible to estimate the effective airflow if you thoroughly understand the enclosure geometry, entry/exit orifice areas and the fan flowrate specifications. If in doubt, contact MPS to discuss placement and measurement techniques of suggested temperature sensors.

CAUTION: If you routinely or accidentally exceed these Derating guidelines, the converter may have an unplanned Over Temperature shut down. Also, these graphs are all collected at slightly above Sea Level altitude. Be sure to reduce the derating for higher density altitude.

Output Overvoltage Protection

This converter monitors its output voltage for an over-voltage condition using an on-board electronic comparator. The signal is optically coupled to the primary side PWM controller. If the output exceeds OVP limits, the sensing circuit will power down the unit, and the output voltage will decrease. After a time-out period, the PWM will automatically attempt to restart, causing the output voltage to ramp up to its rated value. It is not necessary to power down and reset the converter for the this automatic OVP-recovery restart.

If the fault condition persists and the output voltage climbs to excessive levels, the OVP circuitry will initiate another shutdown cycle. This on/off cycling is referred to as "hiccup" mode. It safely tests full current rated output voltage without damaging the converter.

Output Fusing

The converter is extensively protected against current, voltage and temperature extremes. However your output application circuit may need additional protection. In the extremely unlikely event of output circuit failure, excessive voltage could be applied to your circuit. Consider using an appropriate fuse in series with the output.

Output Current Limiting

As soon as the output current increases to approximately 125% to 150% of its maximum rated value, the DC/DC converter will enter a current-limiting mode. The output voltage will decrease proportionally with increases in output current, thereby maintaining a somewhat constant power output. This is commonly referred to as power limiting.

Current limiting inception is defined as the point at which full power falls below the rated tolerance. See the Performance/Functional Specifications. Note particularly that the output current may briefly rise above its rated value. This enhances reliability and continued operation of your application. If the output current is too high, the converter will enter the short circuit condition.

Output Short Circuit Condition

When a converter is in current-limit mode, the output voltage will drop as the output current demand increases. If the output voltage drops too low, the magnetically coupled voltage used to develop primary side voltages will also drop, thereby shutting down the PWM controller. Following a time-out period, the PWM will restart, causing the output voltage to begin ramping up to its appropriate value. If the short-circuit condition persists, another shutdown cycle will initiate. This on/off cycling is called "hiccup mode". The hiccup cycling

reduces the average output current, thereby preventing excessive internal temperatures. A short circuit can be tolerated indefinitely.

Trimming the Output Voltage

The Trim input to the converter allows the user to adjust the output voltage over the rated trim range (please refer to the Specifications). In the trim equations and circuit diagrams that follow, trim adjustments use either a trimpot or a single fixed resistor connected between the Trim input and either the positive or negative output terminals. (On some converters, an external user-supplied precision DC voltage may also be used for trimming). Trimming resistors should have a low temperature coefficient (±100 ppm/deg.C or less) and be mounted close to the converter. Keep leads short. If the trim function is not used, leave the trim unconnected. With no trim, the converter will exhibit its specified output voltage accuracy.

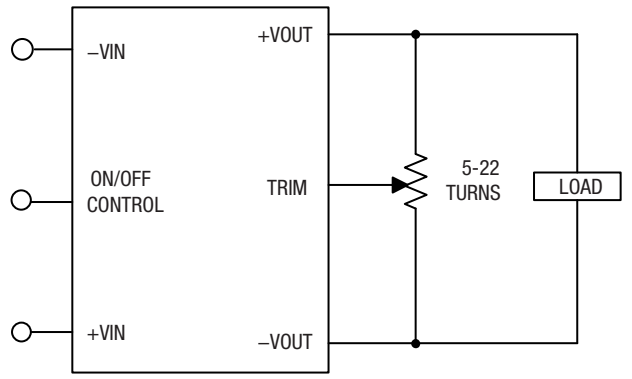

Figure 4. Trim adjustments using a trimpot

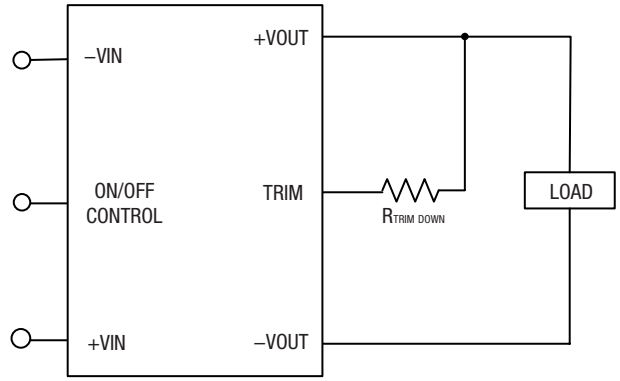

Figure 5. Trim adjustments to decrease Output Voltage using a Fixed Resistor

There are two CAUTIONs to be aware for the Trim input:

CAUTION: To avoid unplanned power down cycles, do not exceed EITHER the maximum output voltage OR the maximum output power when setting the trim. Be particularly careful with a trimpot. If the output voltage is excessive, the OVP circuit may inadvertantly shut down the converter. If the maximum power is exceeded, the converter may enter current limiting. If the power is exceeded for an extended period, the converter may overheat and encounter overtemperature shut down.

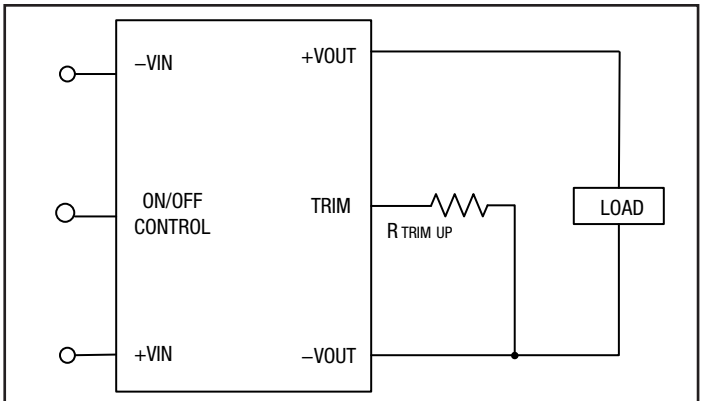

Figure 6. Trim adjustments to increase Output Voltage using a Fixed Resistor

CAUTION: Be careful of external electrical noise. The Trim input is a senstive input to the converter's feedback control loop. Excessive electrical noise may cause instability or oscillation. Keep external connections short to the Trim input. Use shielding if needed.

Trim Equations

Trim Up <Connect trim resistor between Trim and –VOUT>	Trim Down <Connect trim resistor between Trim and +VOUT>
UEI15-033-Q12, Q48	
$R_{T_{UP}}(\Omega) = \frac{12775}{V_O - 3.3} - 2050$	$R_{T_{DOWN}}(\Omega) = \frac{5110\,(V_O - 2.5)}{3.3 - V_O} - 2050$
UEI15-050-Q12, Q48	
$R_{T_{UP}}(\Omega) = \frac{12775}{V_O - 5} - 2050$	$R_{T_{DOWN}}(\Omega) = \frac{5110\,(V_O - 2.5)}{5 - V_O} - 2050$
UEI15-120-Q12, Q48	
$R_{T_{UP}}(\Omega) = \frac{25000}{V_O - 12} - 5110$	$R_{T_{DOWN}}(\Omega) = \frac{10000\,(V_O - 2.5)}{12 - V_O} - 5110$
UEI15-150-Q12, Q48	
$R_{T_{UP}}(\Omega) = \frac{25000}{V_O - 15} - 5110$	$R_{T_{DOWN}}(\Omega) = \frac{10000\,(V_O - 2.5)}{15 - V_O} - 5110$

Where Vo = Desired output voltage. Adjustment accuracy is subject to resistor tolerances and factory-adjusted output accuracy. Mount trim resistor close to converter. Use short leads.

Remote On/Off Control

On the input side, a remote On/Off Control can be ordered with either logic type.

Positive-logic models are enabled when the On/Off pin is left open or is pulled high to +15V max. with respect to $-V_{IN}$. Some models will also turn on at lower intermediate voltages (see Specifications). Positive-logic devices are

disabled when the On/Off is grounded or brought to within a low voltage (see Specifications) with respect to $-V_{IN}$.

Negative-logic devices are on (enabled) when the On/Off is grounded or brought to within a low voltage (see Specifications) with respect to $-V_{IN}$. The device is off (disabled) when the On/Off is left open or is pulled high to $+15V_{DC}$ max. with respect to $-V_{IN}$.

Dynamic control of the On/Off function should be able to sink appropriate signal current when brought low and withstand appropriate voltage when brought high. Be aware too that there is a finite time in milliseconds (see Specifications) between the time of On/Off Control activation and stable, regulated output. This time will vary slightly with output load type and current and input conditions.

There are three CAUTIONs for the On/Off Control:

CAUTION: To retain full output circuit isolation, control the On/Off from the input side ONLY. If you must control it from circuits in the output, use some form of optoisolation to the On/Off Control. This latter condition is unlikely because the device controlling the On/Off would have to remain powered on and not be powered from the converter.

CAUTION: While it is possible to control the On/Off with external logic if you carefully observe the voltage levels, the preferred circuit is either an open drain/open collector transistor, a switch or a relay (which can thereupon be controlled by logic).

CAUTION: Do not apply voltages to the On/Off pin when there is no input power voltage. Otherwise the converter may be permanently damaged.

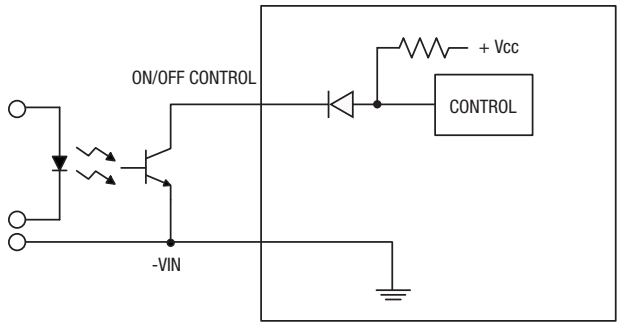

Figure 7. Driving the On/Off Control Pin (suggested circuit)

Pre-Bias Protection

Pre-Bias Protection For applications where a pre-bias potential can be present at the output of the power module it is recommended that either blocking diodes are added in series with the Vout power lines or, a preferred solution is to use an OR-ing FET controller like the LM5050-1 High-Side & LM5051 Low-Side OR-ing FET Controller from TI. Starting the module into a pre-bias condition can cause permanent damage to the module."

Through-hole Soldering Guidelines

Murata Power Solutions recommends the TH soldering specifications below when installing these converters. These specifications vary depending on the solder type. Exceeding these specifications may cause damage to the product. Your production environment may differ; therefore please thoroughly review these guidelines with your process engineers.

Wave Solder Operations for through-hole mounted products (THMT)	
For Sn/Ag/Cu based solders:	
Maximum Preheat Temperature	115° C.
Maximum Pot Temperature	270° C.
Maximum Solder Dwell Time	7 seconds
For Sn/Pb based solders:	
Maximum Preheat Temperature	105° C.
Maximum Pot Temperature	250° C.
Maximum Solder Dwell Time	6 seconds

SMT Reflow Soldering Guidelines

The surface-mount reflow solder profile shown below is suitable for SAC305 type lead-free solders. This graph should be used only as a ***guideline***. Many other factors influence the success of SMT reflow soldering. Since your production environment may differ, please thoroughly review these guidelines with your process engineers.

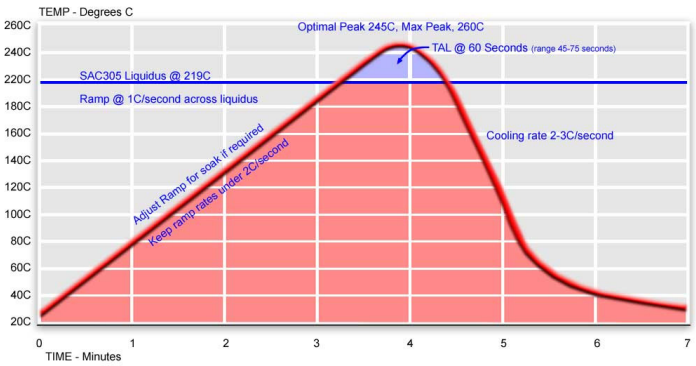

Emissions Performance

Murata Power Solutions measures its products for radio frequency emissions against the EN 55022 and CISPR 22 standards. Passive resistance loads are employed and the output is set to the maximum voltage. If you set up your own emissions testing, make sure the output load is rated at continuous power while doing the tests.

The recommended external input and output capacitors (if required) are included. Please refer to the fundamental switching frequency. All of this information is listed in the Product Specifications. An external discrete filter is installed and the circuit diagram is shown below.

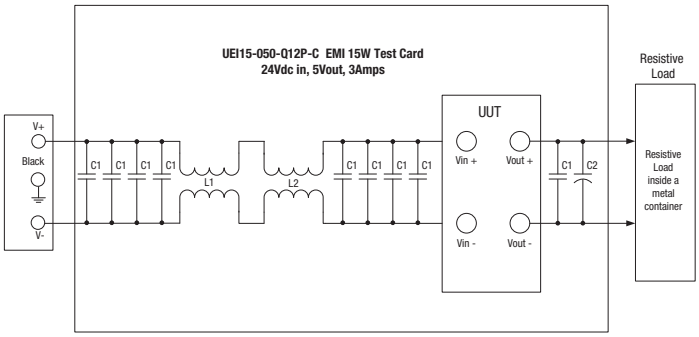

Figure 8. Conducted Emissions Test Circuit

[1] Conducted Emissions Parts List

Reference	Part Number	Description	Vendor
L2	PE-62913	1mH, 6A	Pulse
L1	500uH,10A, MPS	500uH,10A	Murata
C1		Ceramic 2.2ufd, 100V	Murata
C2		Electrolytic Capacitor 33ufd, 100V	Panasonic

[2] Conducted Emissions Test Equipment Used

Rohde & Schwarz EMI Test Receiver (9KHz – 1000MHz) ESPC

Rohde & Schwarz Software ESPC-1 Ver. 2.20

HP11947A Transient Limiter (Agilent)

OHMITE 25W – Resistor combinations

DC Source Power Supply – Kikisui Model PAD 55-6L

[3] Conducted Emissions Test Results

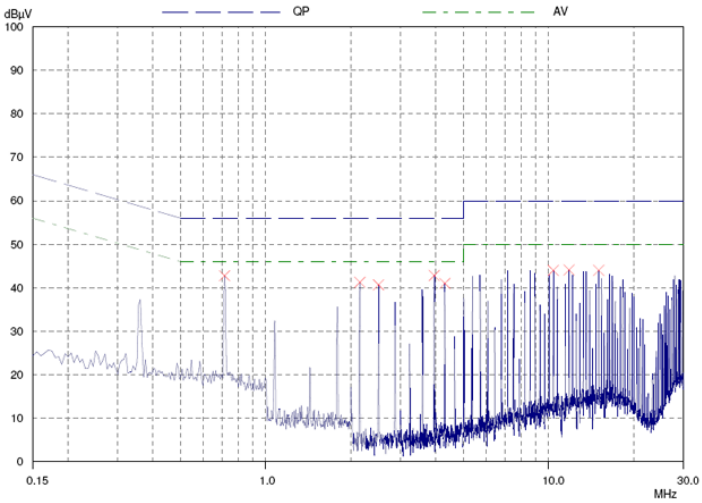

Peak Detection Mode

Graph 1. Conducted emissions performance, CISPR/EN55022, Class B, full load, filtered

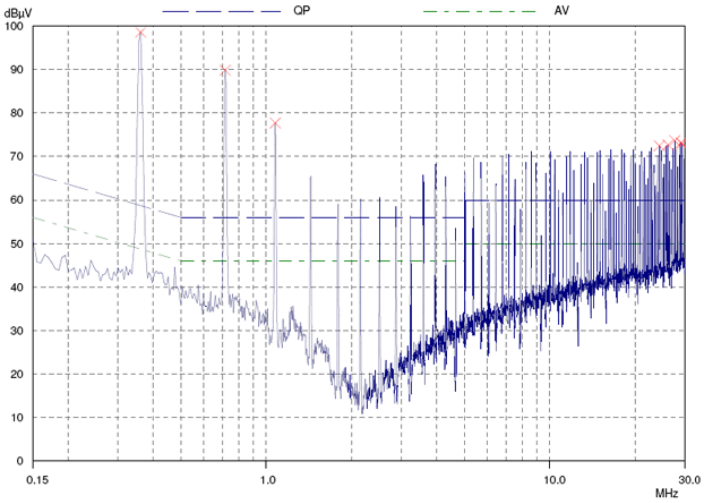

Peak Detection Mode

Graph 1. Conducted emissions performance, CISPR/EN55022, Class B, full load, unfiltered

[4] Layout Recommendations

Most applications can use the filtering which is already installed inside the converter or with the addition of the recommended external capacitors. For greater emissions suppression, consider additional filter components and/or shielding. Emissions performance will depend on the user's PC board layout, the chassis shielding environment and choice of external components. Please refer to Application Note GEAN02 for further discussion.

Since many factors affect both the amplitude and spectra of emissions, we recommend using an engineer who is experienced at emissions suppression.

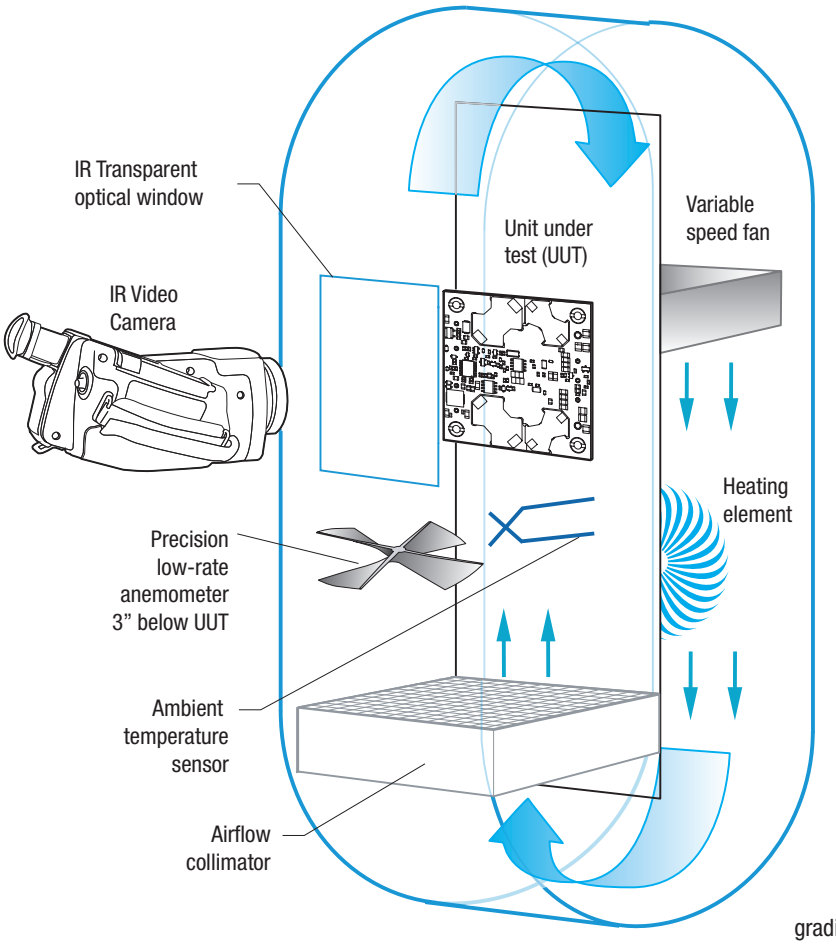

Figure 9. Vertical Wind Tunnel

Vertical Wind Tunnel

Murata Power Solutions employs a computer controlled custom-designed closed loop vertical wind tunnel, infrared video camera system, and test instrumentation for accurate airflow and heat dissipation analysis of power products. The system includes a precision low flow-rate anemometer, variable speed fan, power supply input and load controls, temperature gauges, and adjustable heating element.

The IR camera monitors the thermal performance of the Unit Under Test (UUT) under static steady-state conditions. A special optical port is used which is transparent to infrared wavelengths.

Both through-hole and surface mount converters are soldered down to a host carrier board for realistic heat absorption and spreading. Both longitudinal and transverse airflow studies are possible by rotation of this carrier board since there are often significant differences in the heat dissipation in the two airflow directions. The combination of adjustable airflow, adjustable ambient heat, and adjustable Input/Output currents and voltages mean that a very wide range of measurement conditions can be studied.

The collimator reduces the amount of turbulence adjacent to the UUT by minimizing airflow turbulence. Such turbulence influences the effective heat transfer characteristics and gives false readings. Excess turbulence removes more heat from some surfaces and less heat from others, possibly causing uneven overheating.

Both sides of the UUT are studied since there are different thermal gradients on each side. The adjustable heating element and fan, built-in temperature gauges, and no-contact IR camera mean that power supplies are tested in real-world conditions.