SSRH24NVS-40059

Aliases (UALS24VS400590)

Common Mode Chokes - Power, KEMET, SSRH24NVS/NHS, Through-Hole Bobbin, Common Mode, 5,900 uH

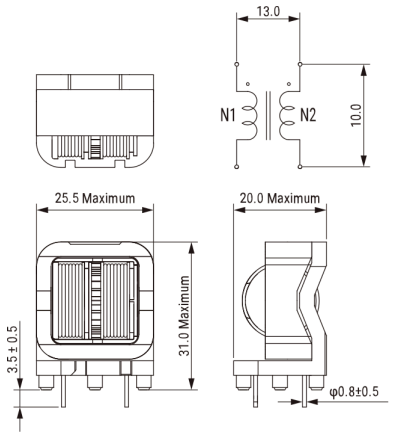

Click here for the 3D model.

General Information	
Series	SSRH24NVS/NHS
Style	Through-Hole Bobbin
Features	Compact Size, Light Weight, High Performance, Low Rdc
RoHS	Yes
Miscellaneous	Temperature Rise Maximum: 65 K.
Core	Mn-Zn Ferrite

Dimensions	
L	25.5mm MAX
T	20mm MAX
H	31mm MAX
LL	3.5mm +/-0.5mm
S	13mm NOM
S1	10mm NOM
Wire Size	0.65mm
F	0.8mm +/-0.5mm

Specifications	
Voltage AC	250 VAC
Inductance	5.9 mH
Rated Current	4 A
Temperature Range	-40/+120°C
DC Resistance	0.055 Ohms

Packaging Specifications	
Packaging	Tray
Packaging Quantity	200
Typical Component Weight	25 g

Statements of suitability for certain applications are based on our knowledge of typical operating conditions for such applications, but are not intended to constitute - and we specifically disclaim - any warranty concerning suitability for a specific customer application or use. This Information is intended for use only by customers who have the requisite experience and capability to determine the correct products for their application. Any technical advice inferred from this Information or otherwise provided by us with reference to the use of our products is given gratis, and we assume no obligation or liability for the advice given or results obtained.

© 2006 - 2026 YAGEO