9-2020

MIL-DTL-38999 Connectors

FOR MILITARY, AEROSPACE AND HARSH ENVIRONMENTS

Amphenol
Aerospace

About Amphenol® Aerospace

Your Source for Interconnect Products

Amphenol Aerospace

Amphenol Aerospace

CONTACT US:

Amphenol Aerospace
40-60 Delaware Avenue
Sidney, NY 13838-1395

Customer Service:
Mon - Fri 8AM - 5PM
Phone: (800) 678-0141
Fax: (607) 563-5157
Online: www.amphenol-aerospace.com

Amphenol Aerospace, Amphenol Commercial Air, and Amphenol Industrial Operations Main Facility in Sidney, NY USA

ABOUT AMPHENOL AEROSPACE:

Amphenol Aerospace, a Division of Amphenol Corporation, is one of the largest manufacturers of interconnect products in the world for the Military, Commercial Aerospace and Industrial markets. Amphenol designs, manufactures and markets circular and rectangular, electronic, fiber optic, EMI/EMP filter, and a variety of special applications connectors and interconnect systems.

Our state-of-the-art facility is nestled at the foothills of the Catskill Mountains in Sidney, NY. The Amphenol complex houses many technologies including CNC machining, die-casting, molding, impact and extruding, plating, screw machining and process controls. Our fully equipped material evaluation lab and engineering organization utilize the latest in computer aided design software and analysis tools, allowing us to design, test, and qualify advanced interconnect systems. Amphenol's interconnect products are supplied to thousands of OEMs worldwide and are supported by our worldwide sales and engineering force, including the largest global network of electronic distributors.

CARE

Customer-Centric:
Our **#1 priority** is our customers who deserve quality product on time.

Accountable:
Clear owners, clear actions, clear results.

Reliable:
What we build matters and quality is imperative.

Enthusiastic:
Challenges create rewarding opportunities. Enthusiasm is contagious and we will spread it.

QUALITY ASSURANCE:

Amphenol Aerospace has been awarded both AS9100 - Revision C and ISO9001:2008 Quality Assurance Certifications.

MIL-DTL-38999, Series I LJT, II JT, III TV, HD

Insert Availability and Identification Chart

Series JT II	Series LJT I	Series TV III	Military III	MIL-DTL-27599 JT/LJT Solder	Crimp	Hermetics Class H	Hermetics Class Y	Hermetics TV*	Service Rating	Total Contacts	Contact Size ■ 23 HD	22D	22M	22	20	16	16 (Cx)	12	12 (Coax)	10 (Power)	8 (Power)	8 (Coax)	8†† (Twinax)	4
		7-D2							M	2		2												
8-2■				P					M	2					2									
8-3■				X	NA	P	P		M	3					3									
	9-3■			X																				
		9-5★■							G	1													1	
8-6				X	X	P	P		M	6			6											
	9-6			X	X	P	P																	
	9-7■			X					M	7			7											
		9-9■			X				N	9	9													
		9-12			◆				M	1								1						
	9-22■			X					I	2					2									
8-35					X	P	P		M	6		6												
	9-35	9-35	A35		X	P	P	P																
8-44					X	P	P		M	4				4										
	9-44				X																			
		9-94■			◆				M	2					2									
8-97■				X					M	4			2		2									
8-98				S	X	P	P		I	3					3									
	9-98	9-98	A98	X	X	P	P	P																
		11-1«			◆				I	1													1	
	11-2★	11-2★	B2		X	P**			I	2						2								
10-4					3				I	4					4									
	11-4	11-4	B4	X	2																			
10-5				X	X	P	P		I	5					5									
	11-5	11-5	B5	X	X			P																
	11-6■			S					I	6					6									
		11-12			◆				II	1								1						
10-13				X	X	P/S	P/S		M	13			13											
	11-13			X	X	P/S	P/S																	
		11-19■			X				N	19	19													
10-35					X	P/S	P/S		M	13		13												
	11-35	11-35	B35		X	P/S	P/S	P																
		11-54■			X				II	4		4												
10-98				X	X	P/S	P/S		I	6					6									
	11-98	11-98	B98	X	X	P/S	P/S	P																
10-99					X	P	P		I	7					7									
	11-99	11-99	B99		X			P																
12-3				X	X	P	P		II	3						3								
	13-3■				P																			
12-4				X	X	P	P		I	4						4								
	13-4★	13-4★	C4	X	X	P	P	P																
12-8				X	X	P	P		I	8					8									
	13-8	13-8	C8	X	X	P	P	P																
		13-13■							I, Fiber Optic	4						2**		2						
12-22					X	P/S	P/S		M	22			22											
	13-22			X	X	P/S	P/S																	
		13-26■			◆				M	8		6						2						
		13-32■			◆				N	32	32													
12-35					X	P/S	P/S		M	22		22												
	13-35	13-35	C35		X	P/S	P/S	P																
		13-63■			◆				I	4						2		2						
12-98				X	X	P/S	P/S		I	10					10									
	13-98	13-98	C98	X	X	P/S	P/S	P																

X Completely tooled.
\+ Majority of tooling is completed (contact Amphenol Aerospace for availability).
◆ Not tooled for 02-R.
P Available with Pin contacts only
S Available with Socket contacts only
P/S Available with Pin contacts or Socket contacts
★ Ground plane proprietary option available. Arrg. 9-5 is exclusively ground plane type.
■ Not Mil-Qualified.
✧ 21-75 is Mil-Qualified with twinax contacts only.
Note: MS connector 21-75 is supplied with size 8 twinax. Commercial connector 21-75 is supplied with size 8 coax.
■ **HD** designates High Density 38999 Series III insert patterns which use size 23 contacts only. Not rated over 175°C.

^ Supplied with D38999/62-A for Twinax, D38999/62-B for Coax
* Hermetic inserts - solder termination standard. (Contact Amphenol Aerospace for optional PCB or eyelet termination).
** Two size 16 contacts dedicated to fiber optics. See the Fiber Optic section for more information.
*** For use in MIL-STD-1760 applications (see pages 75 and 76).
† For RG 180/U and RG 195/U cables only.
†† Size 8 Coax and Twinax are interchangeable.

(2) Not Tooled for RP or 02RE
(3) Pin inserts only, not tooled for RP or 02RE (Consult Amphenol Aerospace for avail.)
(5) MS Connector 21-79 has provision for two size 8 coax contacts. Coax contacts are not supplied unless specified by customer.
≈ Patterns come with D38999/62 sealing boots
« Must buy contacts rfrom Amphenol Socopex

MIL-DTL-38999, Series I LJT, II JT, III TV, HD

Insert Availability and Identification Chart

Amphenol Aerospace

Series JT II	Series LJT I	Series TV III	Military III	MIL-DTL-27599 JT/LJT Solder	Crimp	Hermetics Class H	Hermetics Class Y	Hermetics TV*	Service Rating	Total Contacts	Contact Size 23 HD	22D	22M	22	20	16	16 (Cx)	12	12 (Coax)	10 (Power)	8 (Power)	8 (Coax)	8†† (Twinax)	4
		13-CB■			S				M			4						2						
		15-AC■			◆				M	26		24				2								
		15-AT■			X				I	13		10						3						
		15-BA			◆				M	25		22				3								
14-4■					2				I	4								4						
	15-4■	15-4■			2																			
14-5				X	X	P	P		II	5						5								
	15-5★	15-5★	D5	X	X	P	P	P																
14-15				X	X	P	P		I	15					14	1								
	15-15	15-15	D15	X	X	P/S	P/S	P	I															
14-18				X	X	P/S	P/S		I	18					18									
	15-18	15-18	D18	X	X	P/S	P/S	P																
14-19■				X	X				I	19					19									
	15-19	15-19	D19		X	P	P	P																
14-35					X	P	P		M	37		37												
	15-35	15-35	D35		X	P/S	P/S	P																
14-37				X	X	P	P		M	37			37											
	15-37			X	X	P	P																	
		15-55■			X				N	55	55													
14-68■					2		P	P	1	8							8							
	15-68■	15-68■		X	X																			
14-97					X	P	P		I	12					8	4								
	15-97	15-97	D97	X	X	P		P																
	17-2	17-2	E2		X				M	39		38											1	
		17-3≈	E3≈		X				M	39		38											1	
		17-EA■			◆				M	19		10			3		2	4						
		17-EC■			◆				M	41		32			9									
		17-EG■			◆				M			16						4						
		17-EL			◆				M	18		16											2	
16-6					X	P	P		I	6								6						
	17-6	17-6	E6		X	P	P	P																
16-8				X	X	P	P		II	8							8							
	17-8★	17-8★	E8	X	X	P/S	P/S	P																
		17-11							N	11					8			2	1					
16-13■					2				I	13							13							
	17-13■	17-13■			2																			
	17-22■	17-22★■			◆				Coax	4									2			2		
	17-25■	17-25■			2				M	24		22										2		
16-26				X	X	P/S	P/S		I	26					26									
	17-26	17-26	E26	X	X	P/S	P/S	P																
16-35					X	P	P		M	55		55												
	17-35	17-35	E35	X	X	P	P	P																
16-42					X				M	42				42										
	17-42■				P																			
		17-52■			X				M	2													2	
16-55				X	X	P/S	P/S		M	55			55											
	17-55			X	X	P/S	P/S																	
		17-60■			X				I/Coax	10		8										2		
		17-73■			X				N	73	73													
16-99				X	X	P	P		I	23					21	2								
	17-99	17-99	E99	X	X	P	P																	
		19-AD■			X				Inst.	17					16								1	
		19-A4«			◆				M	4													4	
		19-FA■			◆				M	23		6			8	7		2						
18-11				X	X	P	P		II	11						11								
	19-11★	19-11★	F11	X	X	P	P	P																
		19-17«			◆				M	17		10	1				4						2	
	19-18	19-18	F18		2				M	18		14											4	
		19-19≈	F19≈		2				M	18		14											4	
18-28				X	X				I	28					26		2							
	19-28■	19-28	F28	X	P																			
18-30				X	X				I	30					29		1							
	19-30■	19-30■		X	P																			
		19-31■			X				M	15		12						1				2		

MIL-DTL-38999, Series I LJT, II JT, III TV, HD

Insert Availability and Identification Chart

Series JT II	Series LJT I	Series TV III	Military III	MIL-DTL-27599 JT/LJT Solder	Crimp	Hermetics Class H	Hermetics Class Y	Hermetics TV*	Service Rating	Total Contacts	Contact Size 23 HD	22D	22M	22	20	16	16 (Cx)	12	12 (Coax)	10 (Power)	8 (Power)	8 (Coax)	8†† (Twinax)	4
18-32				X	X	P/S	P/S		I	32					32									
	19-32	19-32	F32	X	X	P/S	P/S	P																
18-35					X	P	P		M	66		66												
	19-35	19-35	F35		X	P	P	P																
18-53				X	X				M	53				53										
	19-53■				P																			
18-66				X	X	P	P		M	66			66											
	19-66				X	P	P																	
	19-67■			X	3	S	S		M	67			67											
18-68■					2				I	18							18							
	19-68■	19-68■			3																			
18-96■					2				I	9								9						
		19-88■			X				N	88	88													
20-1					X	P	P		M	79			79											
		21-AJ			◆				M															
		21-AZ								22		19										3		
	21-1				X	P/S	P/S		M															
20-2					X				M	65				65										
	21-2■				X				M															
20-11■					3				I	11								11						
	21-11★	21-11★	G11		X				I															
20-16				X	X	P/S	P/S		II	16						16								
	21-16★	21-16★	G16	X	X	P	P	P	II															
	21-25■								I	25					25									
	21-27■			X					I	27					27									
		21-29	G29		X				I	27					19	4		4						
20-35					X	P	P		M	79		79												
	21-35	21-35	G35		X	P/S	P/S	P	M															
20-39				X	X	P	P		I	39					37	2								
	21-39	21-39	G39	X	X	P	P	P																
20-41				X	X	P	P		I	41					41									
	21-41	21-41	G41	X	X	P/S	P/S	P																
		21-A48■							M	4											4			
	21-75★	21-75★✧	G75		2				N M	4												4	(4)	
		21-76★✧≈	G76^		2				N M	4												4	(4)	
	21-79■	21-79■			2				II	19		17										2	(2)	
		21-121■			X				N	121	121													
22-1					X	P/S	P/S		M	100			100											
	23-1				X	P	P																	
22-2				X	X	P	P		M	85				85										
	23-2			X	X	P	P																	
	23-6★■	23-6★■		X	P				M	6													6	
22-14■					2 ◆				I	14								14						
	23-14■	23-14■			2 ◆																			
22-21				X	X	P	P		II	21						21								
	23-21★	23-21★	H21	X	X	P	P	P																
22-32				X	X	P	P		I	32					32									
	23-32■			X	P																			
	23-34■			X					I	34					34									
22-35					X	P/S	P/S		M	100		100												
	23-35	23-35	H35		X	P	P	P																
22-53■					P				I	53					53									
	23-53	23-53	H53	X	X	P/S	P/S	P																
		23-54 ■			X				M	53		40				9		4						
22-55				X	X	P	P		I	55					55									
	23-55	23-55	H55		X			P																
		23-63 ■			◆				M	57		49					4		4					
	23-97■			X					II	16						16								
	23-99■			X					II	11						11								
		23-151 ■		◆	X				N	151	151													
24-1					X	P	P		M	128			128											
	25-1				X	P	P																	
24-2					X				M	100				100										
	25-2				X																			
24-4					X	P	P		I	56					48	8								
	25-4	25-4	J4		X			P																
	25-7■	25-7	J7		X				M Twx	99		97										2		

MIL-DTL-38999, Series I LJT, II JT, III TV, HD

Insert Availability and Identification Chart

Amphenol Aerospace

Series JT II	Series LJT I	Series TV III	Military III	MIL-DTL-27599 JT/LJT Solder	Crimp	Hermetics Class H	Hermetics Class Y	Hermetics TV*	Service Rating	Total Contacts	■ 23 HD	22D	22M	22	20	16	16 (Cx)	12	12 (Coax)	10 (Power)	8 (Power)	8 (Coax)	8†† (Twinax)	4
		25-9≈	J9≈		X				M Twx	99		97										2		
		25-8★	J8		◆				Twinax	8													8	
		25-10★≈	J10≈		◆				Twinax	8													8	
		25-11***	J11		2				N	11					2					9				
		25-16■			◆				M	8					6									2
		25-17■			◆				M	42		36											6	
24-19■					X	P	P		I	19								19						
	25-19★	25-19★	J19		X			P																
	25-20■	25-20***	J20		2 ◆				N	30					10	13			4				3	
		25-21***≈	J21≈		2 ◆				N	30					10	13			4				3	
24-24					X	P	P		I	24						12		12						
	25-24★	25-24★	J24		X	P	P																	
		25-26■★			✦				I	25					16			5				4		
24-29					X				I	29						29								
	25-29★	25-29★	J29	X	X																			
24-35					X	P	P		New	128		128												
	25-35	25-35	J35		X	P	P	P	M															
24-37					X				I	37						37								
	25-37★	25-37★	J37		X																			
		25-41■			◆				N Inst.	41		22			3	11			2				3	
24-43■					3				I	43					23	20								
	25-43	25-43	J43	X	2 ◆																			
	25-46	25-46	J46		2 ◆				I	46					40	4						2		
		25-47≈	J47≈		2 ◆				I	46					40	4						2		
24-61				X	X	P	P		I	61			61											
	25-61	25-61	J61	X	X	P	P	P																
		25-88			◆				Coax	8												8		
		25-90	J90		◆				I	46					40	4							2	
		25-91≈	J91≈		◆				I	46					40	4							2	
		25-187 ■			X				N	187	187													
		25-1A ■			◆				N	8						4								4
		25-AT ■			X				M	60		31			12	13			2				2	
		25-F4 ■			X				M/I	66		49				13		4						

X Completely tooled.
\+ Majority of tooling is completed (contact Amphenol Aerospace for availability).
◆ Not tooled for 02-R.
P Available with Pin contacts only
S Available with Socket contacts only
P/S Available with Pin contacts or Socket contacts
★ Ground plane proprietary option available. Arrg. 9-5, 26-62 is exclusively ground plane type.
■ Not Mil-Qualified.
✧ 21-75 is Mil-Qualified with twinax contacts only.
* Hermetic inserts - solder termination standard. (Contact Amphenol Aerospace for optional PCB or eyelet termination).
^ Supplied with D38999/62-A for Twinax, D38999/62-B for Coax

■ HD High Density which use size 23 contacts only. Not rated over 175°C.
** Two size 16 contacts dedicated to fiber optics. See the Fiber Optic Section for more information.
*** For use in MIL-STD-1760 applications (see pages 75 and 76).
† For RG 180/U and RG 195/U cables only.
†† Size 8 Coax and Twinax are interchangeable.
(2) Not Tooled for RP or 02RE
(3) Pin inserts only, not tooled for RP or 02RE (Consult Amphenol for avail.)
(4) MS connector 21-75 is supplied with size 8 twinax. Commercial connector 21-75 is supplied with size 8 coax.
(5) MS Connector 21-79 has provision for two size 8 coax contacts. Coax contacts are not supplied unless specified by customer.
≈ Patterns come with D38999/62 sealing boots

MIL-DTL-38999, Series I LJT, II JT, III TV, HD

Insert Availability and Identification Chart

TV SERIES III-PYLE

SELECT SHELL SIZE - SPECIAL INSERT ARRANGEMENT

(Not Mil-Spec Qualified)

Shell Size-Insert Arrg.	Crimp	Hermetics*	Service Rating	Total Contacts	Comments	Contact Size 22D	20	16	12
9-2	X		I	2	Formerly Pyle		2		
15-4	X		II	4	Formerly Pyle				4
15-25	X		M	25	Formerly Pyle	22		3	
17-20	X		M	20	Formerly Pyle	16			4
21-12	X		I	12	Formerly Pyle		3		9
21-21	X		M/Inst.	41	Improved sealing	32			9
21-99	X		M	16	Formerly Pyle	5			11
25-92	X		M	101	Formerly Pyle	92		9	
25-97	X		M	42	Formerly Pyle	26		3	13

LJT SERIES I-PYLE

SELECT SHELL SIZE - SPECIAL INSERT ARRANGEMENT AND SIZE

(Not Mil-Spec Qualified)

Shell Size-Insert Arrg.	Crimp	Service Rating	Total Contacts	Comments	Contact Size 22D	20	16	12
25-64	X		64	Formerly Pyle	40	8	10	6

X Completely tooled.
\+ Majority of tooling is completed (contact Amphenol Aerospace for availability).
◆ Not tooled for 02-R.
P Pin inserts only (contact Amphenol Aerospace for socket availability).
★ Ground plane proprietary option available. Arrangement 9-5, 25-62 is exclusively ground plane type.
■ Not Mil-Qualified.
* Hermetic inserts - solder termination standard. (Contact Amphenol Aerospace for optional PCB or eyelet termination).
** Two size 16 contacts dedicated to fiber optics. See the Fiber Optic section for more information.
*** For use in MIL-STD-1760 applications (pgs. 75 and 76).
† For RG 180/U and RG 195/U cables only.
†† Size 8 Coax and Twinax are interchangeable.
Note: 25L-3 and 25L-7 use longer shells.
(PWR) Suffix at end of part number to replace coax, twinax, and fiber contacts with power contacts.

XL38999-NON-STANDARD SHELL SIZES

- Special Insert Arrangement

Shell Size-Insert Arrg.	Crimp	Hermetics*	Service Rating	Total Con-tacts	Contact Size 22D	20	8	4	0
25L-3	X		II	3			1	2	
25L-7	X		II	7			7		
33-3	X		II	3				1	2
33-5	X		II	5				5	
33-6	X		II	6			2	4	
37-5	X		II	4					4

(Insert arrangements requiring non-standard shells)

MIL-DTL-38999, Series I LJT, II JT, III TV, HD

Insert Arrangements

Amphenol Aerospace

Front face of pin inserts illustrated

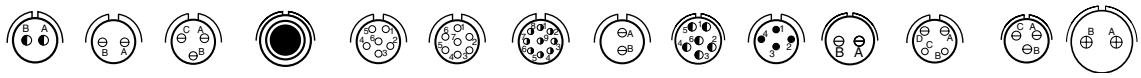

Shell Size & Insert Arrg. for:														
Series II JT		8-2	8-3		8-6				8-35	8-44		8-97	8-98	
Series I LJT			9-3		9-6	9-7		9-22	9-35	9-44			9-98	11-2
Series III TV	7-D2			9-5			9-9 HD		9-35		9-94		9-98	11-2
Service Rating	M	M	M	Grounded	M	M	N	I	M	M	M	M	I	I
Number of Contacts	2	2	3	1	6	7	9	2	6	4	2	2 2	3	2
Contact Size	22D	20	20	8 Twinax	22M	22M	23	20	22D	22	20	22M 20	20	16

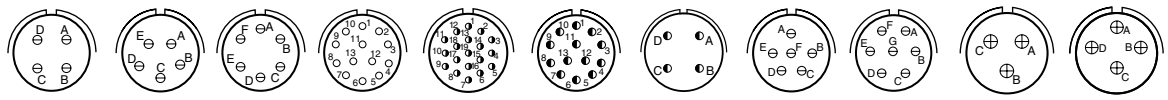

Shell Size & Insert Arrg. for:											
Series II JT	10-4	10-5		10-13		10-35		10-98	10-99	12-3	12-4
Series I LJT	11-4	11-5	11-6	11-13		11-35		11-98	11-99	13-3	13-4
Series III TV	11-4	11-5			11-19 HD	11-35	11-54	11-98	11-99		13-4
Service Rating	I	I	I	M	N	M	II	I	I	II	I
Number of Contacts	4	5	6	13	19	13	4	6	7	3	4
Contact Size	20	20	20	22M	23	22D	22D	20	20	16	16

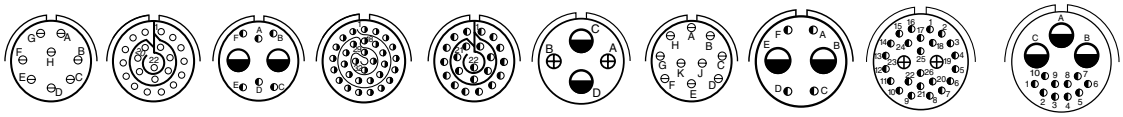

Shell Size & Insert Arrg. for:										
Series II JT	12-8	12-22			12-35		12-98			
Series I LJT	13-8	13-22			13-35		13-98			
Series III TV	13-8		13-26	13-32 HD	13-35	13-63	13-98	13-CB	15-AC	15-AT
Service Rating	I	M	M	N	M	I	I	M	M	I
Number of Contacts	8	22	6 2	32	22	2 2	10	4 2	24 2	10 3
Contact Size	20	22M	22D 12	23	22D	16 12	20	22D 12	22D 16	22D 12

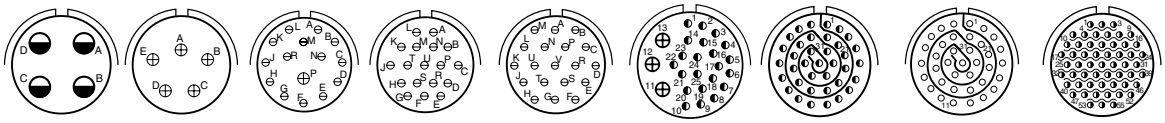

Shell Size & Insert Arrg. for:									
Series II JT	14-4	14-5	14-15	14-18	14-19		14-35	14-37	
Series I LJT	15-4	15-5	15-15	15-18	15-19		15-35	15-37	
Series III TV	15-4	15-5	15-15	15-18	15-19	15-25	15-35		15-55 HD
Service Rating	I	II	I	I	I	M	M	M	N
Number of Contacts	4	5	14 1	18	19	22 3	37	37	55
Contact Size	12	16	20 16	20	20	22D 16	22D	22M	23

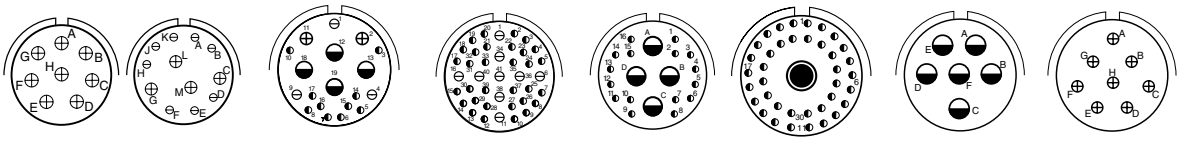

Shell Size & Insert Arrg. for:									
Series II JT	14-68	14-97						16-6	16-8
Series I LJT	15-68	15-97					17-2 | 17-3^	17-6	17-8
Series III TV	15-68	15-97	17-EA	17-EC	17-EG		17-2 | 17-3^	17-6	17-8
Service Rating	I	I	M	M	M		M	I	II
Number of Contacts	8	8 4	10 3 2 4	32 9	16 4		38 1	6	8
Contact Size	16	20 16	22D 20 16 12	22D 20	22D 12		22D 8 Twinax	12	16

HD: High Density HD38999 (use size 23 contacts only)
^ Supplied with D38999/62-A for Twinax, D38999/62-B for Coax

CONTACT LEGEND 8 10 12 16 20 22 22M 22D 23

MIL-DTL-38999, Series I LJT, II JT, III TV, HD

Insert Arrangements

Front face of pin inserts illustrated

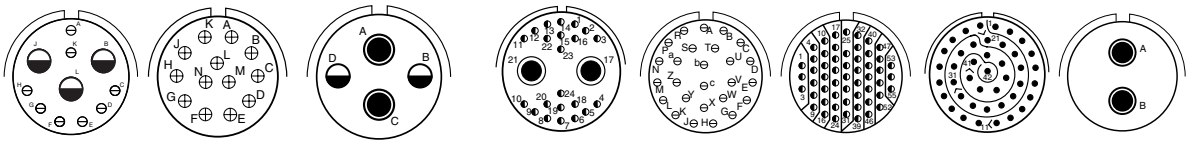

Shell Size & Insert Arrg. for:								
Series II JT		16-13			16-26	16-35	16-42	
Series I LJT		17-13	17-22	17-25	17-26	17-35	17-42	
Series III TV	17-11	17-13	17-22	17-25	17-26	17-35		17-52
Service Rating	N	I	Coax	M	I	M	M	M
Number of Contacts	1 | 2 | 8	13	2 2	22 2	26	55	42	2
Contact Size	12 | 12 | 20	16	12 Coax 8 Coax	22D 8 Coax	20	22D	22	8 Twinax
	Coax Twinax							

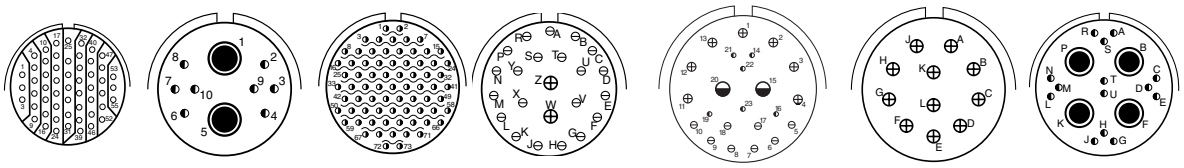

Shell Size & Insert Arrg. for:								
Series II JT	16-55			16-99		18-11		
Series I LJT	17-55			17-99		19-11	19-18 | 19-19^	
Series III TV		17-60	17-73 HD	17-99	19-FA	19-11	19-18 | 19-19^	
Service Rating	M	I/Coax	N	I	M	II	M	
Number of Contacts	55	8 2	73	21 2	6 8 7 2	11	14	4
Contact Size	22M	22D 8 Coax	23	20 16	22D 20 16 12	16	22D	8 Twinax

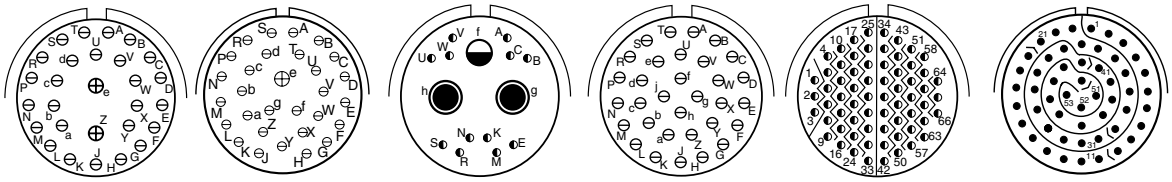

Shell Size & Insert Arrg. for:						
Series II JT	18-28	18-30		18-32	18-35	18-53
Series I LJT	19-28	19-30		19-32	19-35	19-53
Series III TV	19-28		19-31	19-32	19-35	
Service Rating	M	I	M	1	M	M
Number of Contacts	26 2	29 1	2 1 12	32	66	53
Contact Size	20 16	20 16	8 Coax 12 22D	20	22D	22

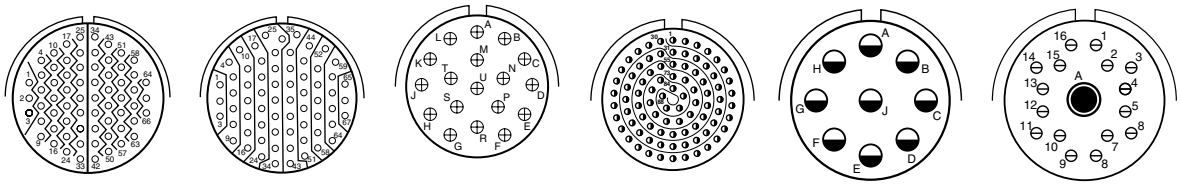

Shell Size & Insert Arrg. for:						
Series II JT	18-66		18-68		18-96	
Series I LJT	19-66	19-67	19-68			
Series III TV			19-68	19-88 HD		19-AD
Service Rating	M	M	I	N	I	Inst.
Number of Contacts	66	67	18	88	9	16 1
Contact Size	22M	22M	16	23	12	20 8 Twinax

CONTACT LEGEND 8 10 12 16 20 22 22M 22D 23

HD: High Density HD38999 (use size 23 contacts only)
^ Supplied with D38999/62-A for Twinax, D38999/62-B for Coax

Insert Arrangements

Front face of pin inserts illustrated

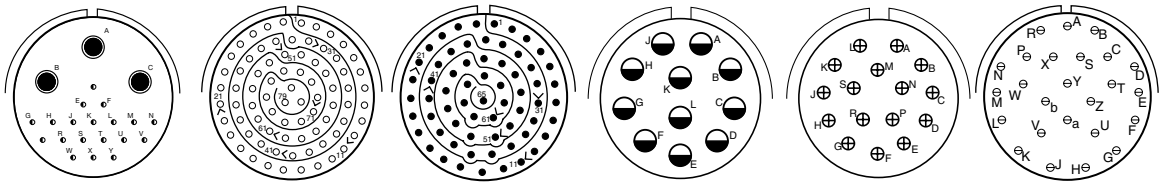

Shell Size & Insert Arrg. for:						
Series II JT		20-1	20-2	20-11	20-16	
Series I LJT		21-1	21-2	21-11	21-16	21-25
Series III TV	21-AZ			21-11	21-16	
Service Rating	M	M	II	I	II	I
Number of Contacts	3 | 19	79	65	11	16	25
Contact Size	8 | 22D	22M	22	12	16	20

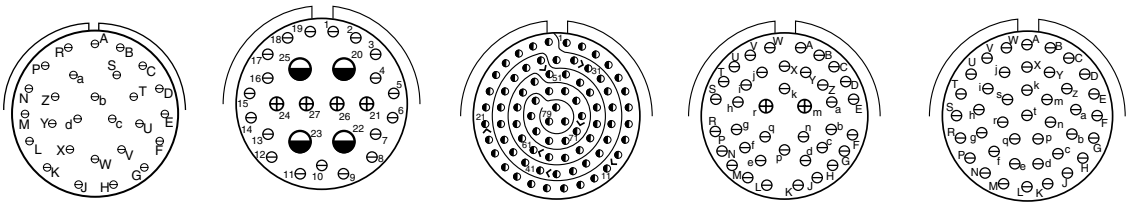

Shell Size & Insert Arrg. for:						
Series II JT			20-35	20-39	20-41
Series I LJT	21-27		21-35	21-39	21-41
Series III TV		21-29	21-35	21-39	21-41
Service Rating	I	I	M	1	I
Number of Contacts	27	19 | 4 | 4	79	37 | 2	41
Contact Size	20	20 | 16 | 12	22D	20 | 16	20

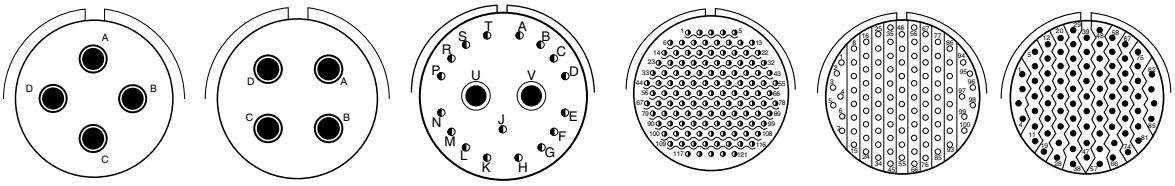

Shell Size & Insert Arrg. for:						
Series II JT					22-1	22-2
Series I LJT		21-75 | 21-76^	21-79		23-1	23-2
Series III TV	21-A48	21-75 | 21-76^	21-79	21-121 HD		
Service Rating	M	N	II	N	M	M
Number of Contacts	4	4	17 (See Note)	121	100	85
Contact Size	8 power	(See Note)	22D	23	22M	22

HD: High Density HD38999 (use size 23 contacts only)
Note: MS connector 21-75 is supplied with four size 8 twinax contacts.
Commercial connector 21-75 is supplied with four size 8 coax contacts.
MS connector 21-79 has provision for two size 8 coax contacts.
Coax contacts are not supplied unless specified by customers.
^ Supplied with D38999/62-A for Twinax, D38999/62-B for Coax

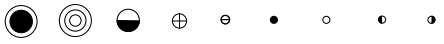

CONTACT LEGEND 8 10 12 16 20 22 22M 22D 23

MIL-DTL-38999, Series I LJT, II JT, III TV, HD

Insert Arrangements

Front face of pin inserts illustrated

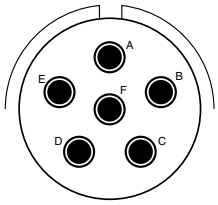
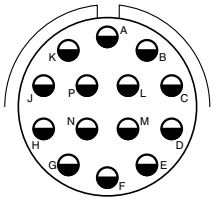
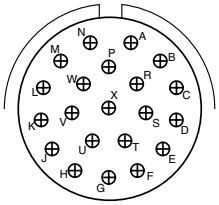
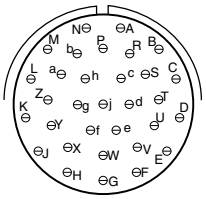
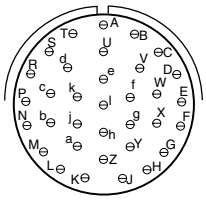

Shell Size & Insert Arrg. for:					
Series II JT		22-14	22-21	22-32	
Series I LJT	23-6	23-14	23-21	23-32	23-34
Series III TV	23-6	23-14	23-21		
Service Rating	M	I	II	I	I
Number of Contacts	6	14	21	32	34
Contact Size	8 Twinax	12	16	20	20

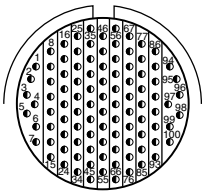
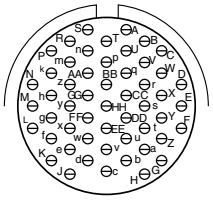
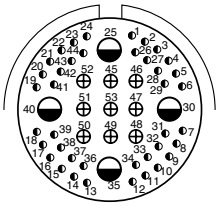
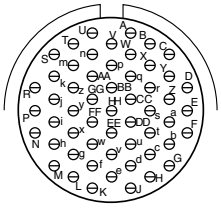
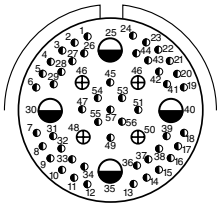

Shell Size & Insert Arrg. for:								
Series II JT	22-35	22-53			22-55			
Series I LJT	23-35	23-53			23-55			
Series III TV	23-35	23-53	23-54		23-55	23-63		
Service Rating	M	I	M		I	M		
Number of Contacts	100	53	40	9	55	49	4	4
Contact Size	22D	20	22D	16	20	22D	16 Coax	12 Coax

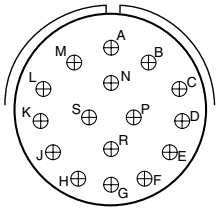
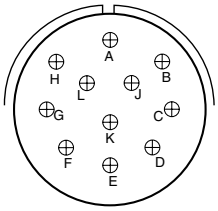
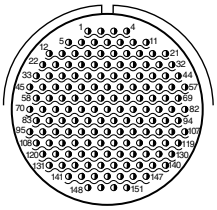
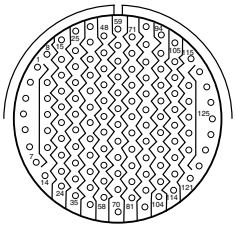
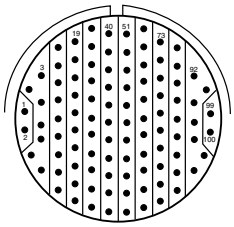

Shell Size & Insert Arrg. for:					
Series II JT				24-1	24-2
Series I LJT	23-97	23-99		25-1	25-2
Series III TV			23-151 HD		
Service Rating	II	II	N	M	M
Number of Contacts	16	11	151	128	100
Contact Size	16	16	23	22M	22

CONTACT LEGEND	8	10	12	16	20	22	22M	22D	23

HD: High Density HD38999 (use size 23 contacts only)
^ Supplied with D38999/62-A for Twinax, D38999/62-B for Coax

MIL-DTL-38999, Series I LJT, II JT, III TV

Insert Arrangements

Amphenol Aerospace

Front face of pin inserts illustrated

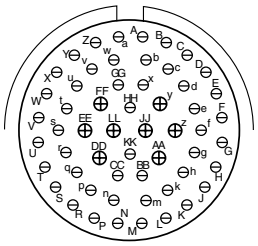
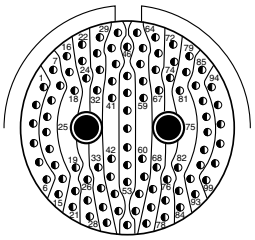
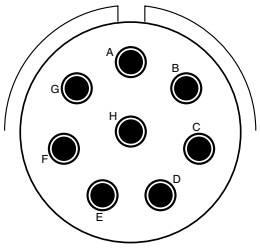
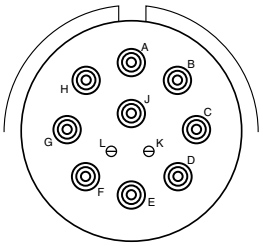

Shell Size & Insert Arrg. for:							
Series II JT	24-4						
Series I LJT	25-4		25-7 | 25-9^			25-11	
Series III TV	25-4		25-7 | 25-9^		25-8 | 25-10^ | 25-88	25-11***	
Service Rating	I		M		Twinax / Coax	N	
Number of Contacts	48	8	97	2	8	2	9
Contact Size	20	16	22D	8 Twinax	8 Twinax / 8 Coax (88)	20	10

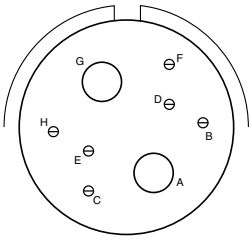
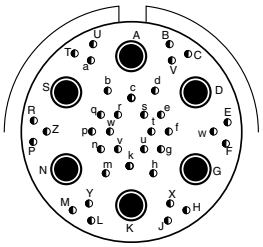
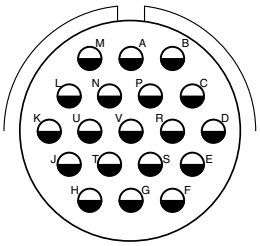
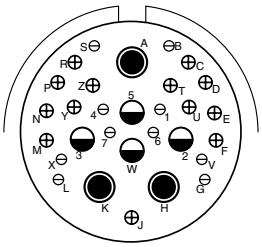

Shell Size & Insert Arrg. for:								
Series II JT					24-19			
Series I LJT					25-19	25-20 | 25-21^		
Series III TV	25-16		25-17		25-19	*** 25-20 | 25-21^		
Service Rating	M		M		I	N		
Number of Contacts	6	2	36	6	19	10	13	3	4
Contact Size	20	4	22D	8 Twinax	12	20	16	8 Twinax	12 Coax
						(With Matched Impedance)			

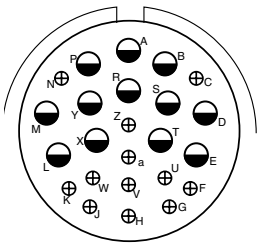
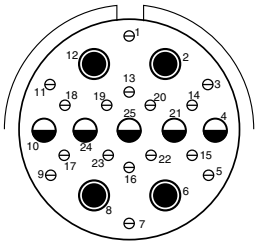
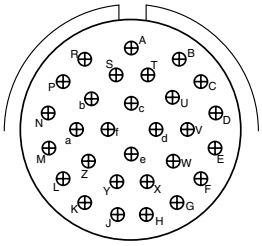
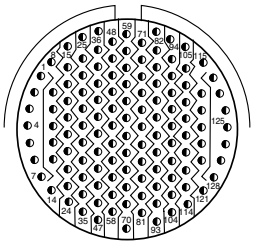

Shell Size & Insert Arrg. for:								
Series II JT	24-24					24-29	24-35	
Series I LJT	25-24					25-29	25-35	
Series III TV	25-24		25-26			25-29	25-35	
Service Rating	I		I			I	M	
Number of Contacts	12	12	16	5	4	29	128	
Contact Size	16	12	20	12	8 Coax	16	22D	

*** For use in MIL-STD-1760 applications (see pages 76 and 77).
HD: High Density HD38999 (use size 23 contacts only)
^ Supplied with D38999/62-A for Twinax, D38999/62-B for Coax

CONTACT LEGEND	8	10	12	16	20	22	22M	22D	23

MIL-DTL-38999, Series I LJT, II JT, III TV, HD

Insert Arrangements

Front face of pin inserts illustrated

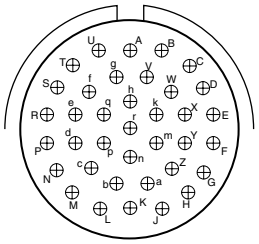
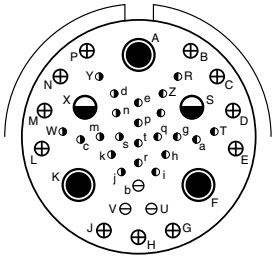
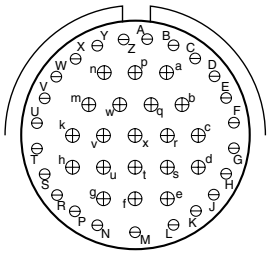

Shell Size & Insert Arrg. for:								
Series II JT	24-37						24-43	
Series I LJT	25-37						25-43	
Series III TV	25-37	25-41					25-43	
Service Rating	I	N/Inst.					I	
Number of Contacts	37	22	3	11	2	3	23	20
Contact Size	16	22D	20	16	12 Coax	8 Twinax	20	16

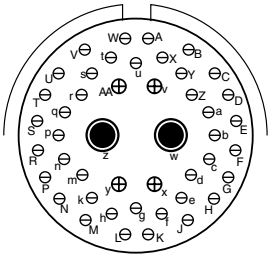
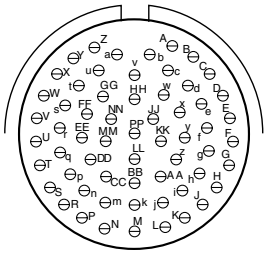
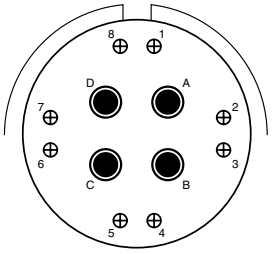
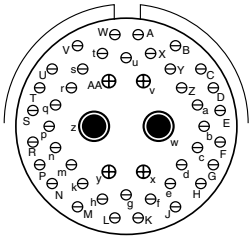

Shell Size & Insert Arrg. for:									
Series II JT				24-61					
Series I LJT	25-46 | 25-47^			25-61					
Series III TV	25-46 | 25-47^			25-61	25-62		25-90 | 25-91^		
Service Rating	I			I	I		I		
Number of Contacts	40	4	2	61	8	4	40	4	2
Contact Size	20	16	8 Coax †	20	16	8	20	16	8 Twinax
					Ground Plane Only				

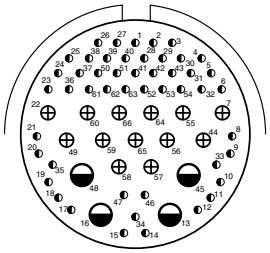
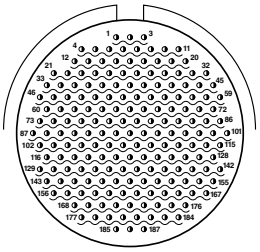
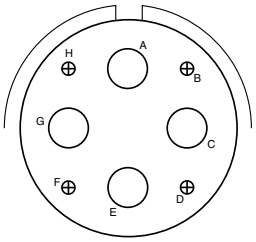
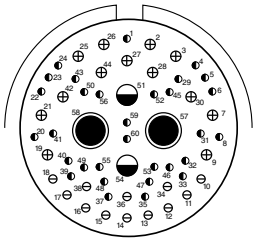

Shell Size & Insert Arrg. for:										
Series II JT										
Series I LJT										
Series III TV	25-F4			25-187 HD	25-1A		25-AT			
Service Rating	Size 22D=M, Balance =I			N	N		N			
Number of Contacts	49	13	4	187	4	4	2	2	13	12	31
Contact Size	22D	16	12	23	16	4	10	12	16S	20	22D

CONTACT LEGEND 8 10 12 16 20 22 22M 22D 23

† Coax contacts for RG180/U or RG195/U cable.

HD: High Density HD38999 (use size 23 contacts only)

^ Supplied with D38999/62-A for Twinax, D38999/62-B for Coax

Special Insert Arrangements

Front face of pin inserts illustrated

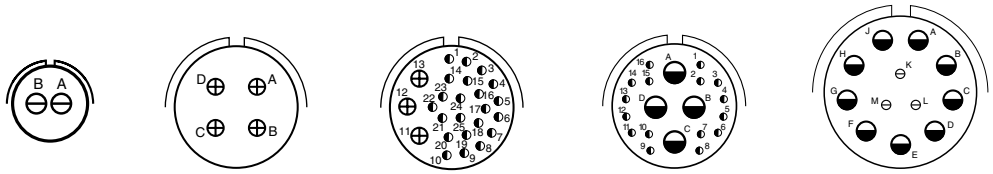

Shell Size & Insert Arrg. for:										
Series III TV	**9-2**	**15-4***	**15-25**		**17-20**		**21-12**	
Service Rating	I	II	M		M		I	
Number of Contacts	2	4	22	3	16	4	3	9
Contact Size	20	16	22D	16	22D	12	20	12

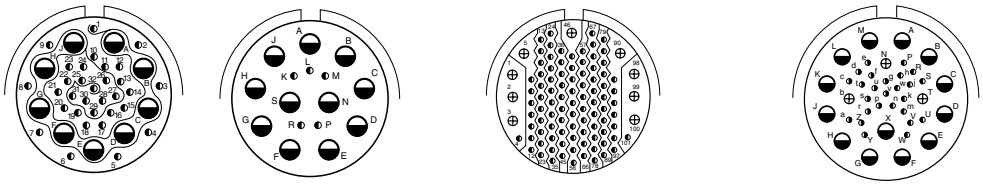

Shell Size & Insert Arrg. for:									
Series III TV	**21-21**		**21-99**		**25-92**		**25-97**		
Service Rating	M/Inst.		M		M		M		
Number of Contacts	32	9	5	11	92	9	26	3	13
Contact Size	22D	12	22D	12	22D	16	22D	16	12

Tracer Power/Signal Arrangements-Direct Current (VDC) With and Without Ground

Available now with Amphenol's **Tracer Rapid Prototyping Insert Technology**, contact **tracer@amphenol-aao.com**
Contact factory for lead time on standard D38999 insert technology.

TRACER
Rapid Prototyping

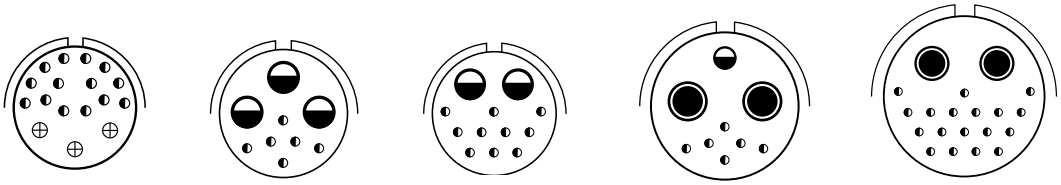

Shell Size & Insert Arrg. for:											
Series III TV	**13-AX**		**15-AX**		**15-AZ**		**17-AZ**			**19-AX**	
Service Rating	M		II		II		II			II	
Number of Contacts	3	14	3	6	2	10	2	1	6	2	18
Contact Size	16	22D	12	22D	12	22D	8	12	22D	8	22D

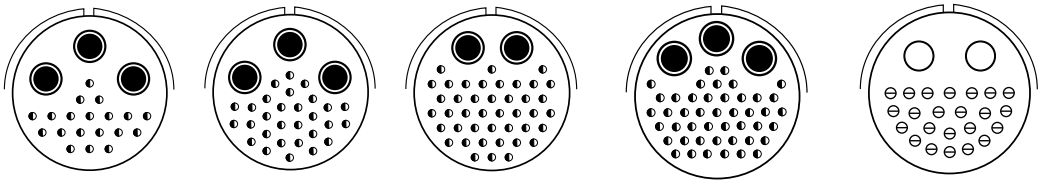

Shell Size & Insert Arrg. for:										
Series III TV	**21-AZ**		**23-AZ**		**23-AX**		**25-AX**		**25-22**	
Service Rating	II		II		II		II		M	
Number of Contacts	3	19	3	29	2	42	3	46	2	23
Contact Size	8	22D	8	22D	8	22D	8	22D	4	20

CONTACT LEGEND	4	8	10	12	16	20	22	22M	22D	23*

MIL-DTL-38999, Series III TV

Special Insert Arrangements

Non-Standard Shells or Large Contacts

Front face of pin inserts illustrated

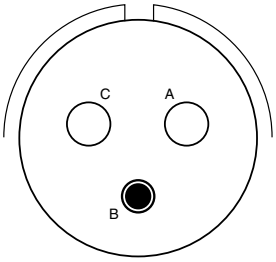

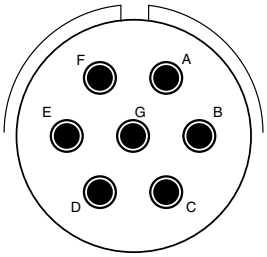

Shell Size & Insert Arrg. for:

Series III TV	25L-3		25L-7
Service Rating	II		II
Number of Contacts	1	2	7
Contact Size	8	4	8

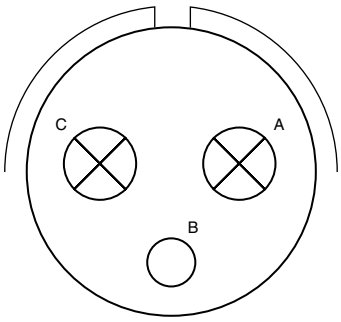

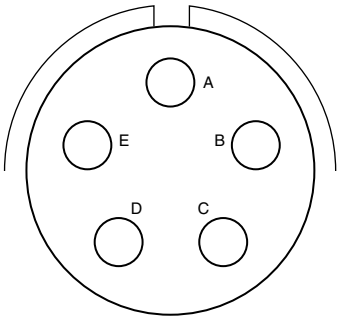

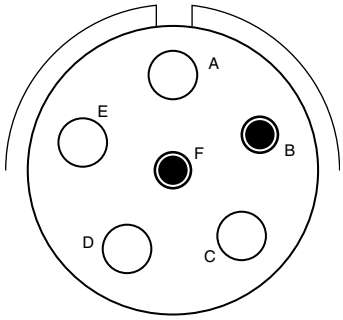

Shell Size & Insert Arrg. for:

Series III TV	33-3		33-5	33-6	
Service Rating	II		II	II	
Number of Contacts	1	2	5	2	4
Contact Size	4	0	4	8	4

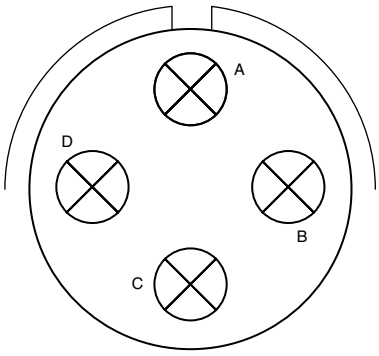

Shell Size & Insert Arrg. for:

Series III TV	37-5
Service Rating	II
Number of Contacts	4
Contact Size	0

NOTE: Some specials shown here were formerly known as Pyle arrangements. Consult Amphenol for how to order information for connectors with these inserts.
Consult Amphenol Aerospace for longer shell drawings.

CONTACT LEGEND

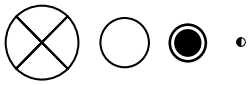

0 4 8 22D

Amphenol Aerospace

Insert Arrangements

INSERT ARRANGEMENT #8-3 / 9-3

Connector Type:	JT MIL-DTL-38999 Series II	LJT MIL-DTL-38999 Series I	Tri-Start MIL-DTL-38999 Series III	Number of Contacts	Contact Size	Service Rating
Insert Designation:	8-3	9-3	NA	3	20	M

Contact Locations
Front face of pin insert shown

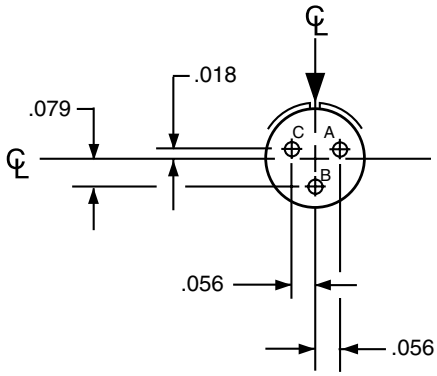

*Service Rating: M for MIL-DTL-38999

INSERT ARRANGEMENT #8-35 / 9-35

Connector Type:	JT MIL-DTL-38999 Series II	LJT MIL-DTL-38999 Series I	Tri-Start MIL-DTL-38999 Series III	Number of Contacts	Contact Size	Service Rating
Insert Designation:	8-35	9-35	9-35	6	22D	M

Contact Locations
Front face of pin insert shown

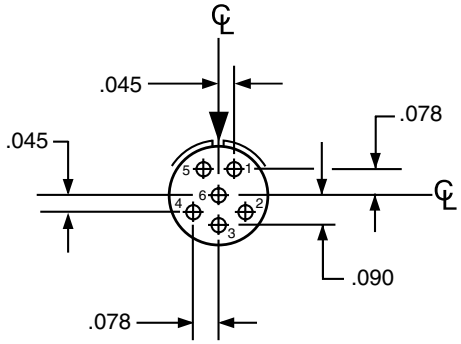

All dimensions for reference only. For alternate rotations see page 47 for Series III, page 87 for Series II, and page 115 for Series I.
Note: Shown in this catalog are the most common insert patterns for PCB applications. For availability of other arrangements, consult Amphenol Aerospace.

PCB Contacts 38999, Series I LJT, II JT, III TV

Insert Arrangements

INSERT ARRANGEMENT #8-98 / 9-98

Connector Type:	JT MIL-DTL-38999 Series II	LJT MIL-DTL-38999 Series I	Tri-Start MIL-DTL-38999 Series III	Number of Contacts	Contact Size	Service Rating
Insert Designation:	8-98	9-98	9-98	3	20	I

Contact Locations

Front face of pin insert shown

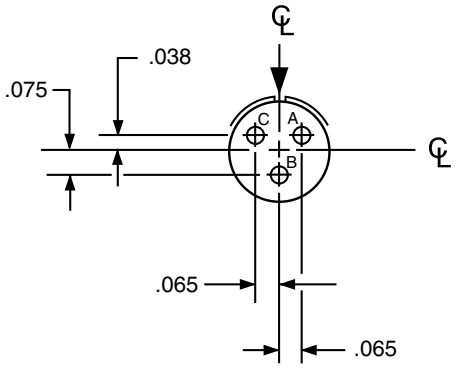

INSERT ARRANGEMENT #10-5 / 11-5

Connector Type:	JT MIL-DTL-38999 Series II	LJT MIL-DTL-38999 Series I	Tri-Start MIL-DTL-38999 Series III	Number of Contacts	Contact Size	Service Rating
Insert Designation:	10-5	11-5	11-5	5	20	I

Contact Locations

Front face of pin insert shown

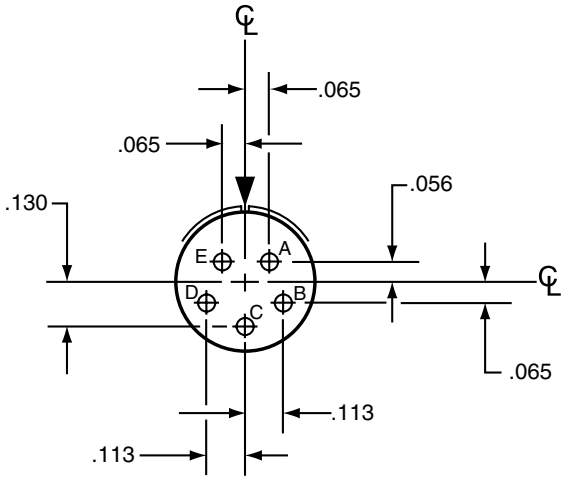

All dimensions for reference only. For alternate rotations see page 47 for Series III, page 87 for Series II, and page 115 for Series I.
Note: Shown in this catalog are the most common insert patterns for PCB applications. For availability of other arrangements, consult Amphenol Aerospace.

PCB Contacts 38999, Series I LJT, II JT, III TV

Insert Arrangements

INSERT ARRANGEMENT #10-6 / 11-6

Connector Type:	JT MIL-DTL-38999 Series II	LJT MIL-DTL-38999 Series I	Tri-Start MIL-DTL-38999 Series III	Number of Contacts	Contact Size	Service Rating
Insert Designation:	NA	11-6	NA	6	20	I

Contact Locations
Front face of pin insert shown

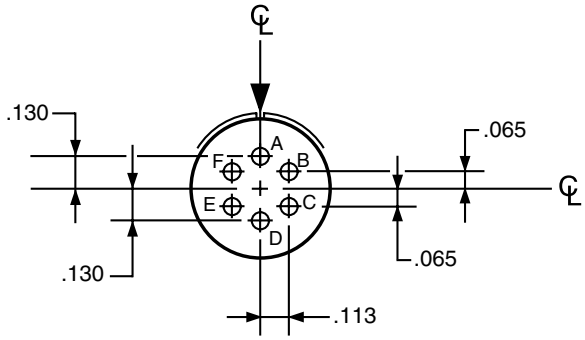

INSERT ARRANGEMENT #10-35 / 11-35

Connector Type:	JT MIL-DTL-38999 Series II	LJT MIL-DTL-38999 Series I	Tri-Start MIL-DTL-38999 Series III	Number of Contacts	Contact Size	Service Rating
Insert Designation:	10-35	11-35	11-35	13	22D	M

Contact Locations
Front face of pin insert shown

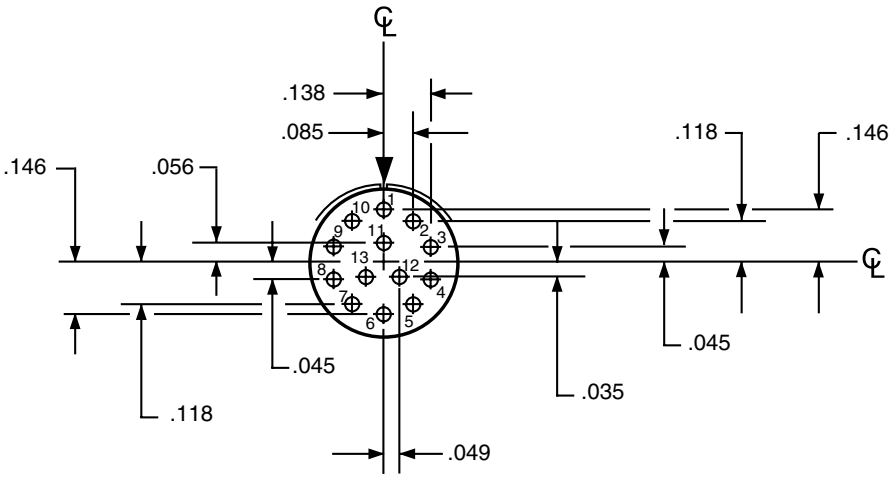

All dimensions for reference only. For alternate rotations see page 47 for Series III, page 87 for Series II, and page 115 for Series I.
Note: Shown in this catalog are the most common insert patterns for PCB applications. For availability of other arrangements, consult Amphenol Aerospace.

PCB Contacts 38999, Series I LJT, II JT, III TV

Insert Arrangements

INSERT ARRANGEMENT #12-3 / 13-3

Connector Type:	JT MIL-DTL-38999 Series II	LJT MIL-DTL-38999 Series I	Tri-Start MIL-DTL-38999 Series III
Insert Designation:	12-3	13-3	NA

Number of Contacts	Contact Size	Service Rating
3	16	II

Contact Locations

Front face of pin insert shown

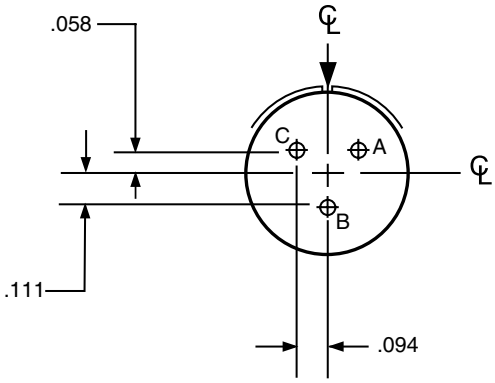

INSERT ARRANGEMENT #12-35 / 13-35

Connector Type:	JT MIL-DTL-38999 Series II	LJT MIL-DTL-38999 Series I	Tri-Start MIL-DTL-38999 Series III
Insert Designation:	12-35	13-35	13-35

Number of Contacts	Contact Size	Service Rating
22	22D	M

Contact Locations

Front face of pin insert shown

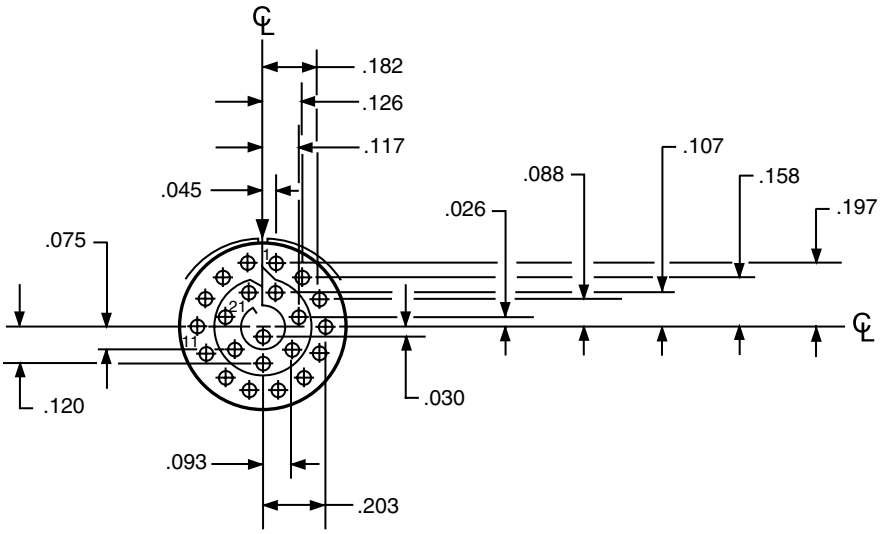

All dimensions for reference only. For alternate rotations see page 47 for Series III, page 87 for Series II, and page 115 for Series I.
Note: Shown in this catalog are the most common insert patterns for PCB applications. For availability of other arrangements, consult Amphenol Aerospace.

PCB Contacts 38999, Series I LJT, II JT, III TV

Insert Arrangements

INSERT ARRANGEMENT #14-18 / 15-18

Connector Type:	JT MIL-DTL-38999 Series II	LJT MIL-DTL-38999 Series I	Tri-Start MIL-DTL-38999 Series III	Number of Contacts	Contact Size	Service Rating
Insert Designation:	14-18	15-18	15-18	18	20	I

Contact Locations

Front face of pin insert shown

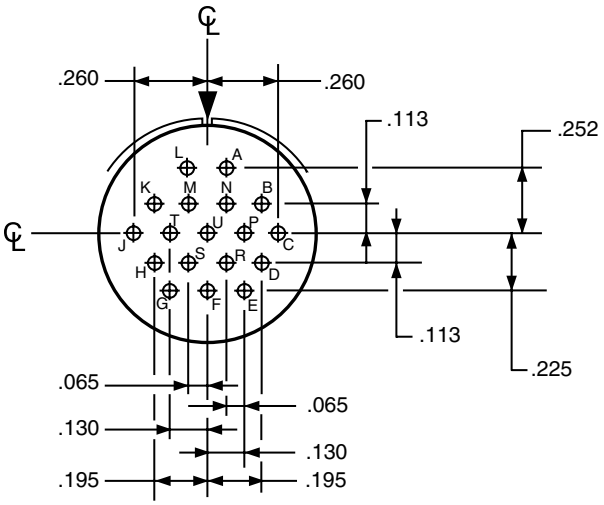

INSERT ARRANGEMENT #14-19 / 15-19

Connector Type:	JT MIL-DTL-38999 Series II	LJT MIL-DTL-38999 Series I	Tri-Start MIL-DTL-38999 Series III	Number of Contacts	Contact Size	Service Rating
Insert Designation:	14-19	15-19	15-19	19	20	I

Contact Locations

Front face of pin insert shown

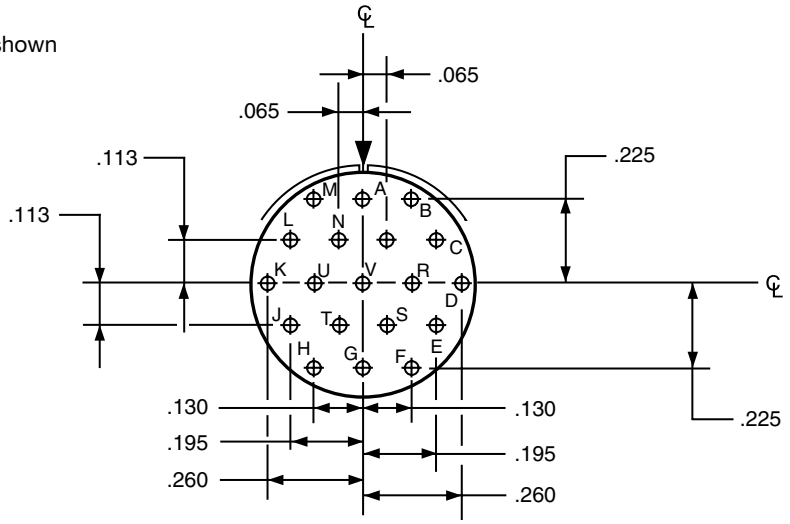

All dimensions for reference only. For alternate rotations see page 47 for Series III, page 87 for Series II, and page 115 for Series I.
Note: Shown in this catalog are the most common insert patterns for PCB applications. For availability of other arrangements, consult Amphenol Aerospace.

PCB Contacts 38999, Series I LJT, II JT, III TV

Insert Arrangements

INSERT ARRANGEMENT #14-35 / 15-35

Connector Type:	JT MIL-DTL-38999 Series II	LJT MIL-DTL-38999 Series I	Tri-Start MIL-DTL-38999 Series III
Insert Designation:	14-35	15-35	15-35

Number of Contacts	Contact Size	Service Rating
37	22D	M

Contact Locations
Front face of pin insert shown

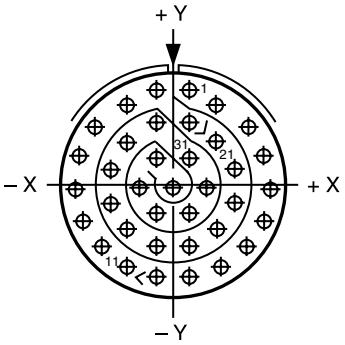

Contact Hole Locations		
Contact Number	Location X Axis	Location Y Axis
1	+.045	+.262
2	+.123	+.217
3	+.211	+.160
4	+.254	+.080
5	+.266	–.010
6	+.247	–.098
7	+.200	–.175
8	+.130	–.232
9	+.045	–.262
10	–.045	–.262
11	–.130	–.232
12	–.200	–.175
13	–.247	–.098
14	–.266	–.010
15	–.254	+.080
16	–.211	+.160
17	–.123	+.217
18	–.045	+.262

Contact Hole Locations		
Contact Number	Location X Axis	Location Y Axis
19	+.045	+.172
20	+.123	+.119
21	+.170	+.040
22	+.170	–.050
23	+.123	–.127
24	+.045	–.172
25	–.045	–.172
26	–.123	–.127
27	–.170	–.050
28	–.170	+.040
29	–.123	+.119
30	–.045	+.172
31	+.045	+.074
32	+.090	–.004
33	+.045	–.082
34	–.045	–.082
35	–.090	–.004
36	–.045	+.074
37	.000	–.004

INSERT ARRANGEMENT #16-26 / 17-26

Connector Type:	JT MIL-DTL-38999 Series II	LJT MIL-DTL-38999 Series I	Tri-Start MIL-DTL-38999 Series III
Insert Designation:	NA	17-26	17-26

Number of Contacts	Contact Size	Service Rating
26	20	I

Contact Locations
Front face of pin insert shown

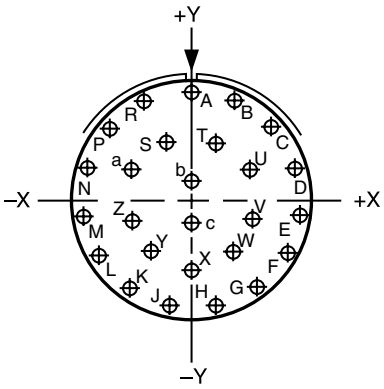

Contact Hole Locations		
Contact Number	Location X Axis	Location Y Axis
A	.000	+.321
B	+.131	+.293
C	+.239	+.214
D	+.305	+.099
E	+.319	–.034
F	+.278	–.161
G	+.189	–.260
H	+.067	–.314
J	–.067	–.314
K	–.189	–.260
L	–.278	–.161
M	–.319	–.034
N	–.305	+.099
P	–.239	+.214

Contact Hole Locations		
Contact Number	Location X Axis	Location Y Axis
R	–.131	+.293
S	–.070	+.177
T	+.070	+.177
U	+.175	+.094
V	+.178	–.036
W	+.119	–.151
X	.000	–.203
Y	–.119	–.151
Z	–.178	–.036
a	–.175	+.094
b	.000	+.065
c	.000	–.065

All dimensions for reference only. For alternate rotations see page 47 for Series III, page 87 for Series II, and page 115 for Series I.
Note: Shown in this catalog are the most common insert patterns for PCB applications. For availability of other arrangements, consult Amphenol Aerospace.

Amphenol Aerospace

INSERT ARRANGEMENT #16-35 / 17-35

Connector Type:	JT MIL-DTL-38999 Series II	LJT MIL-DTL-38999 Series I	Tri-Start MIL-DTL-38999 Series III
Insert Designation:	16-35	17-35	17-35

Number of Contacts	Contact Size	Service Rating
55	22D	M

Contact Locations
Front face of pin insert shown

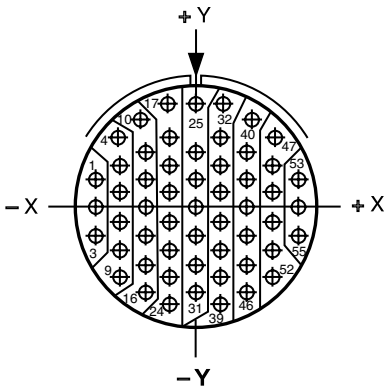

Contact Hole Locations		
Contact Number	Location X Axis	Location Y Axis
1	–.312	+.086
2	–.312	–.004
3	–.312	–.094
4	–.242	+.221
5	–.234	+.131
6	–.234	+.041
7	–.234	–.049
8	–.234	–.139
9	–.234	–.229
10	–.172	+.279
11	–.156	+.176
12	–.156	+.086
13	–.156	–.004
14	–.156	–.094
15	–.156	–.184
16	–.156	–.274
17	–.089	+.316
18	–.078	+.221
19	–.078	+.131
20	–.078	+.041
21	–.078	–.049
22	–.078	–.139
23	–.078	–.229
24	–.078	–.319
25	.000	+.329
26	.000	+.176
27	.000	+.086

Contact Hole Locations		
Contact Number	Location X Axis	Location Y Axis
28	.000	–.004
29	.000	–.094
30	.000	–.184
31	.000	–.274
32	+.089	+.316
33	+.078	+.221
34	+.078	+.131
35	+.078	+.041
36	+.078	–.049
37	+.078	–.139
38	+.078	–.229
39	+.078	–.319
40	+.172	+.279
41	+.156	+.176
42	+.156	+.086
43	+.156	–.004
44	+.156	–.094
45	+.156	–.184
46	+.156	–.274
47	+.242	+.221
48	+.234	+.131
49	+.234	+.041
50	+.234	–.049
51	+.234	–.139
52	+.234	–.229
53	+.312	+.086
54	+.312	–.004
55	+.312	–.094

All dimensions for reference only. For alternate rotations see page 47 for Series III, page 87 for Series II, and page 115 for Series I.
Note: Shown in this catalog are the most common insert patterns for PCB applications. For availability of other arrangements, consult Amphenol Aerospace.

PCB Contacts 38999, Series I LJT, II JT, III TV

Insert Arrangements

INSERT ARRANGEMENT #18-11 / 19-11

Connector Type:	JT MIL-DTL-38999 Series II	LJT MIL-DTL-38999 Series I
Insert Designation:	18-11	19-11

Number of Contacts	Contact Size	Service Rating
11	16	II

Contact Locations
Front face of pin insert shown

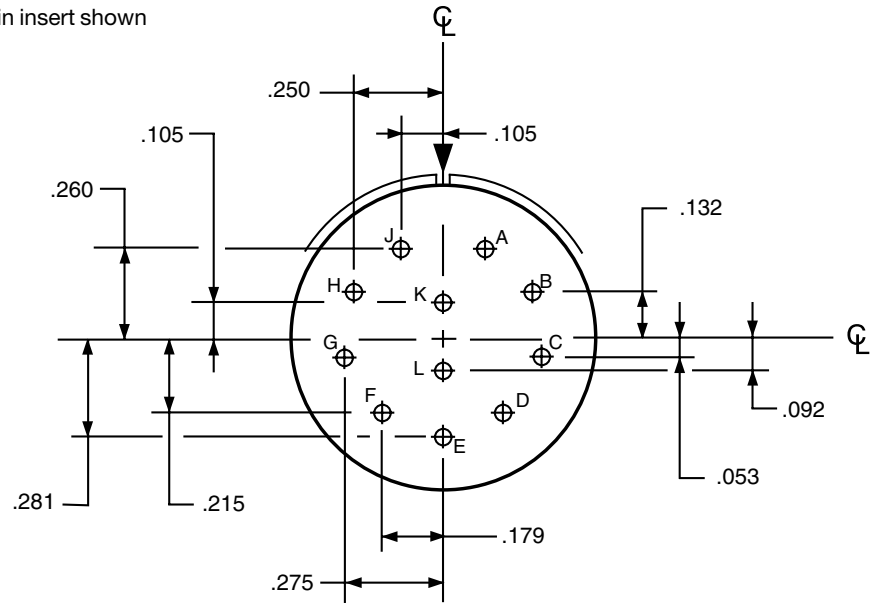

INSERT ARRANGEMENT #18-32 / 19-32

Connector Type:	JT MIL-DTL-38999 Series II	LJT MIL-DTL-38999 Series I	Tri-Start MIL-DTL-38999 Series III
Insert Designation:	18-32	19-32	19-32

Number of Contacts	Contact Size	Service Rating
32	20	I

Contact Locations
Front face of pin insert shown

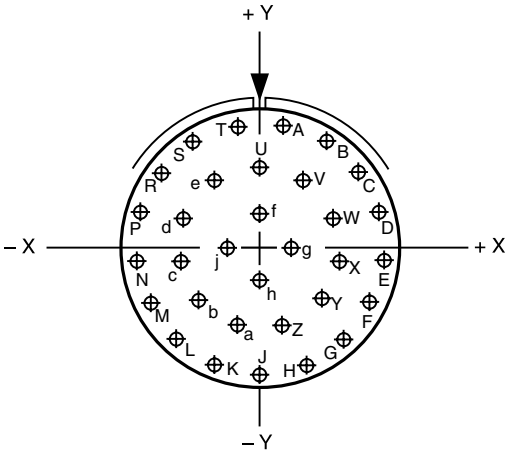

Contact Hole Locations		
Contact Letter	Location X Axis	Location Y Axis
A	+.066	+.353
B	+.189	+.305
C	+.286	+.217
D	+.345	+.098
E	+.357	–.033
F	+.321	–.160
G	+.242	–.265
H	+.130	–.335
J	.000	–.359
K	–.130	–.335
L	–.242	–.265
M	–.321	–.160
N	–.357	–.033
P	–.345	+.098
R	–.286	+.217
S	–.189	+.305

Contact Hole Locations		
Contact Letter	Location X Axis	Location Y Axis
T	–.066	+.353
U	.000	+.230
V	+.124	+.193
W	+.209	+.095
X	+.228	–.033
Y	+.174	–.151
Z	+.065	–.221
a	–.065	–.221
b	–.174	–.151
c	–.228	–.033
d	–.209	+.095
e	–.124	+.193
f	.000	+.096
g	+.096	.000
h	.000	–.096
j	–.096	.000

All dimensions for reference only. For alternate rotations see page 47 for Series III, page 87 for Series II, and page 115 for Series I.
Note: Shown in this catalog are the most common insert patterns for PCB applications. For availability of other arrangements, consult Amphenol Aerospace.

PCB Contacts 38999, Series I LJT, II JT, III TV

Insert Arrangements

INSERT ARRANGEMENT #18-35 / 19-35

Connector Type:	JT MIL-DTL-38999 Series II	LJT MIL-DTL-38999 Series I	Tri-Start MIL-DTL-38999 Series III
Insert Designation:	18-35	19-35	19-35

Number of Contacts	Contact Size	Service Rating
66	22D	M

Contact Locations
Front face of pin insert shown

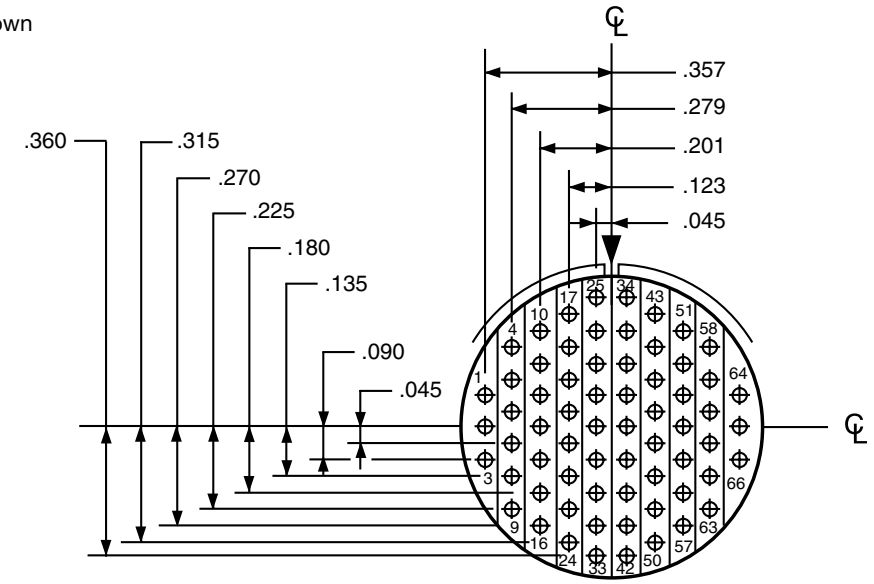

INSERT ARRANGEMENT #20-27 / 21-27

Connector Type:	JT MIL-DTL-38999 Series II	LJT MIL-DTL-38999 Series I	Tri-Start MIL-DTL-38999 Series III
Insert Designation:	20-27	21-27	NA

Number of Contacts	Contact Size	Service Rating
27	20	I

Contact Locations
Front face of pin insert shown

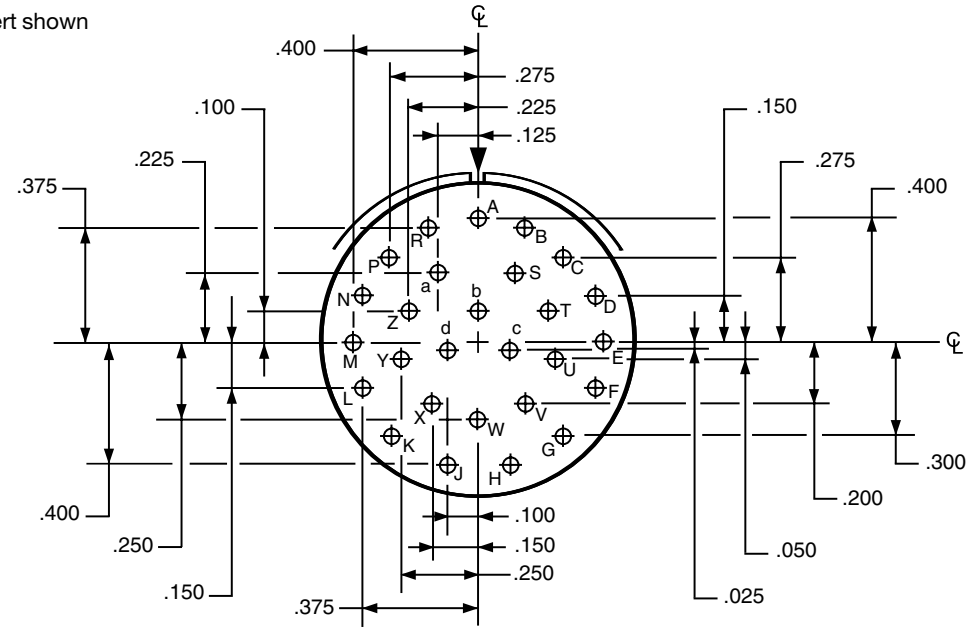

All dimensions for reference only. For alternate rotations see page 47 for Series III, page 87 for Series II, and page 115 for Series I.
Note: Shown in this catalog are the most common insert patterns for PCB applications. For availability of other arrangements, consult Amphenol Aerospace.

PCB Contacts 38999, Series I LJT, II JT, III TV

Insert Arrangements

INSERT ARRANGEMENT #20-35 / 21-35

Connector Type:	JT MIL-DTL-38999 Series II	LJT MIL-DTL-38999 Series I	Tri-Start MIL-DTL-38999 Series III
Insert Designation:	20-35	21-35	21-35

Number of Contacts	Contact Size	Service Rating
79	22D	M

Contact Locations
Front face of pin insert shown

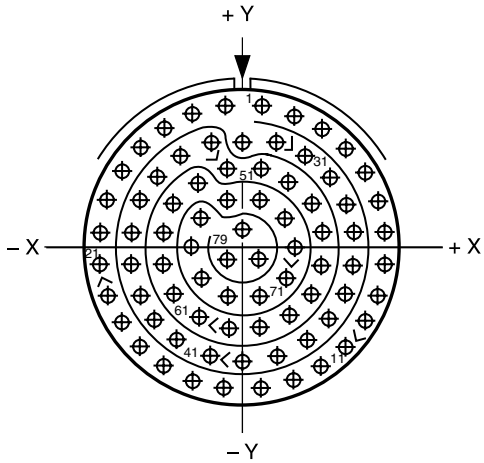

Contact Hole Locations		
Contact Number	Location X Axis	Location Y Axis
1	+.053	+.426
2	+.146	+.404
3	+.232	+.362
4	+.306	+.302
5	+.365	+.227
6	+.406	+.141
7	+.427	+.048
8	+.427	–.048

Contact Hole Locations		
Contact Number	Location X Axis	Location Y Axis
9	+.406	–.141
10	+.365	–.227
11	+.306	–.302
12	+.232	–.362
13	+.146	–.404
14	+.053	–.426
15	–.053	–.426
16	–.146	–.404
17	–.232	–.362
18	–.306	–.302
19	–.365	–.227
20	–.406	–.141
21	–.427	–.048
22	–.427	+.048
23	–.406	+.141
24	–.365	+.227
25	–.306	+.302
26	–.232	+.362
27	–.146	+.404
28	–.053	+.426
29	.000	+.323
30	+.098	+.322
31	+.184	+.280
32	+.258	+.220
33	+.311	+.141
34	+.332	+.048
35	+.332	–.048
36	+.311	–.141
37	+.258	–.220
38	+.184	–.280
39	+.098	–.322
40	.000	–.347
41	–.098	–.322
42	–.184	–.280

Contact Hole Locations		
Contact Number	Location X Axis	Location Y Axis
43	–.258	–.220
44	–.311	–.141
45	–.332	–.048
46	–.332	+.048
47	–.311	+.141
48	–.258	+.220
49	–.184	+.280
50	–.098	+.322
51	–.048	+.241
52	+.048	+.241
53	+.134	+.199
54	+.208	+.139
55	+.237	+.048
56	+.237	–.048
57	+.208	–.139
58	+.134	–.199
59	+.048	–.241
60	–.048	–.241
61	–.134	–.199
62	–.208	–.139
63	–.237	–.048
64	–.237	+.048
65	–.208	+.139
66	–.134	+.199
67	–.048	+.146
68	+.048	+.146
69	+.125	+.090
70	+.155	.000
71	+.125	–.090
72	+.048	–.146
73	–.048	–.146
74	–.125	–.090
75	–.155	.000
76	–.125	+.090
77	.000	+.053
78	+.048	–.029
79	–.048	–.029

All dimensions for reference only. For alternate rotations see page 47 for Series III, page 87 for Series II, and page 115 for Series I.
Note: Shown in this catalog are the most common insert patterns for PCB applications. For availability of other arrangements, consult Amphenol Aerospace.

Insert Arrangements

INSERT ARRANGEMENT #20-41 / 21-41

Connector Type:	JT MIL-DTL-38999 Series II	LJT MIL-DTL-38999 Series I	Tri-Start MIL-DTL-38999 Series III
Insert Designation:	20-41	21-41	21-41

Number of Contacts	Contact Size	Service Rating
41	20	I

Contact Locations
Front face of pin insert shown

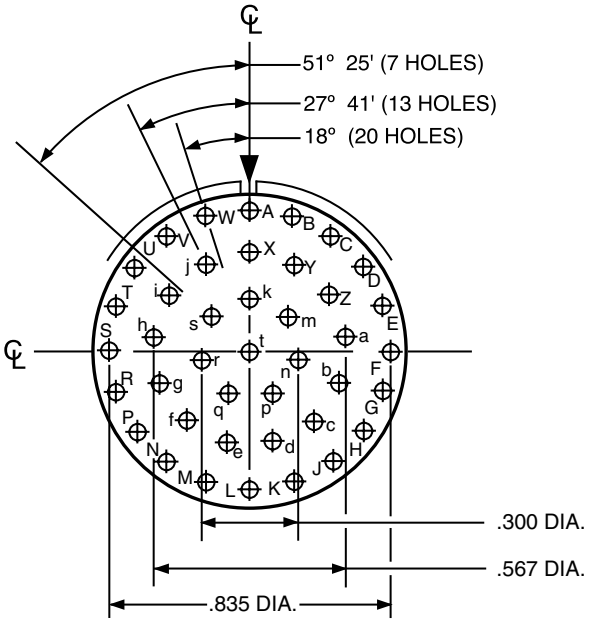

All dimensions for reference only. For alternate rotations see page 47 for Series III, page 87 for Series II, and page 115 for Series I.
Note: Shown in this catalog are the most common insert patterns for PCB applications. For availability of other arrangements, consult Amphenol Aerospace.

PCB Contacts 38999, Series I LJT, II JT, III TV

Insert Arrangements

INSERT ARRANGEMENT #22-35 / 23-35

Connector Type:	JT MIL-DTL-38999 Series II	LJT MIL-DTL-38999 Series I	Tri-Start MIL-DTL-38999 Series III
Insert Designation:	22-35	23-35	23-35

Number of Contacts	Contact Size	Service Rating
100	22D	M

Contact Locations
Front face of pin insert shown

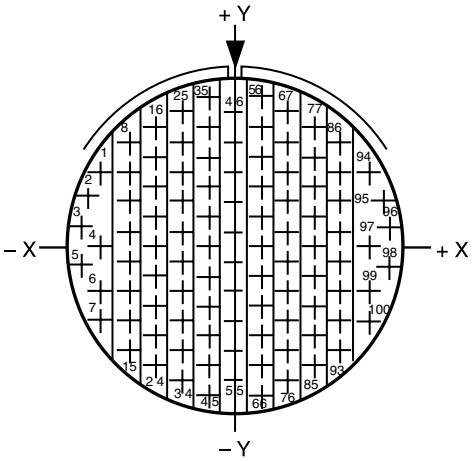

Contact Hole Locations		
Contact Number	Location X Axis	Location Y Axis
1	–.428	+.241
2	–.467	+.154
3	–.488	+.061
4	–.415	.000
5	–.488	–.061
6	–.428	–.142
7	–.428	–.237
8	–.332	+.333
9	–.332	+.238
10	–.332	+.143
11	–.332	+.048
12	–.332	–.047
13	–.332	–.142
14	–.332	–.237
15	–.332	–.332
16	–.249	+.380
17	–.249	+.285
18	–.249	+.190
19	–.249	+.095

Contact Hole Locations		
Contact Number	Location X Axis	Location Y Axis
20	–.249	.000
21	–.249	–.095
22	–.249	–.190
23	–.249	–.285
24	–.249	–.380
25	–.166	+.428
26	–.166	+.333
27	–.166	+.238
28	–.166	+.143
29	–.166	+.048
30	–.166	–.047
31	–.166	–.142
32	–.166	–.237
33	–.166	–.332
34	–.166	–.427
35	–.083	+.475
36	–.083	+.380
37	–.083	+.285
38	–.083	+.190
39	–.083	+.095
40	–.083	.000
41	–.083	–.095
42	–.083	–.190
43	–.083	–.285
44	–.083	–.380
45	–.083	–.475
46	.000	+.428
47	.000	+.333
48	.000	+.238
49	.000	+.143
50	.000	+.048
51	.000	–.047
52	.000	–.142
53	.000	–.237
54	.000	–.332
55	.000	–.427
56	+.083	+.475
57	+.083	+.380
58	+.083	+.285
59	+.083	+.190

Contact Hole Locations		
Contact Number	Location X Axis	Location Y Axis
60	+.083	+.095
61	+.083	.000
62	+.083	–.095
63	+.083	–.190
64	+.083	–.285
65	+.083	–.380
66	+.083	–.475
67	+.166	+.428
68	+.166	+.333
69	+.166	+.238
70	+.166	+.143
71	+.166	+.048
72	+.166	–.047
73	+.166	–.142
74	+.166	–.237
75	+.166	–.332
76	+.166	–.427
77	+.249	+.380
78	+.249	+.285
79	+.249	+.190
80	+.249	+.095
81	+.249	.000
82	+.249	–.095
83	+.249	–.190
84	+.249	–.285
85	+.249	–.380
86	+.332	+.333
87	+.332	+.238
88	+.332	+.143
89	+.332	+.048
90	+.332	–.047
91	+.332	–.142
92	+.332	–.237
93	+.332	–.332
94	+.428	+.241
95	+.467	+.154
96	+.488	+.061
97	+.415	.000
98	+.488	–.061
99	+.428	–.142
100	+.428	–.237

All dimensions for reference only. For alternate rotations see page 47 for Series III, page 87 for Series II, and page 115 for Series I.
Note: Shown in this catalog are the most common insert patterns for PCB applications. For availability of other arrangements, consult Amphenol Aerospace.

PCB Contacts 38999, Series I LJT, II JT, III TV

Insert Arrangements

INSERT ARRANGEMENT #22-55 / 23-55

Connector Type:	JT MIL-DTL-38999 Series II	LJT MIL-DTL-38999 Series I	Tri-Start MIL-DTL-38999 Series III
Insert Designation:	22-55	23-55	23-55

Number of Contacts	Contact Size	Service Rating
55	20	I

Contact Locations
Front face of pin insert shown

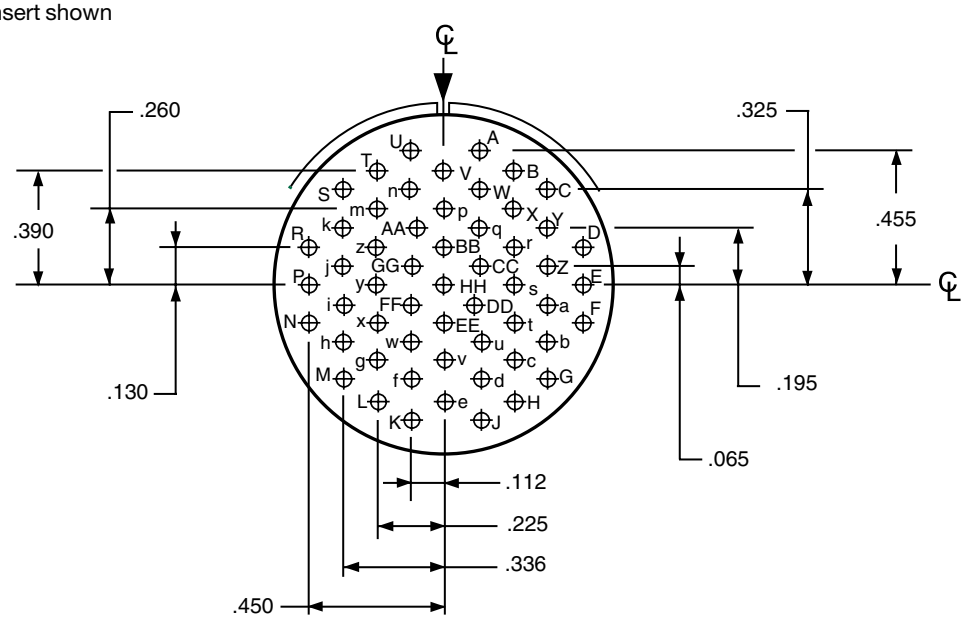

INSERT ARRANGEMENT #24-31 / 25-31

Connector Type:	JT MIL-DTL-38999 Series II	LJT MIL-DTL-38999 Series I	Tri-Start MIL-DTL-38999 Series III
Insert Designation:	24-31	NA	NA

Number of Contacts	Contact Size	Service Rating
31	16	I

Contact Locations
Front face of pin insert shown

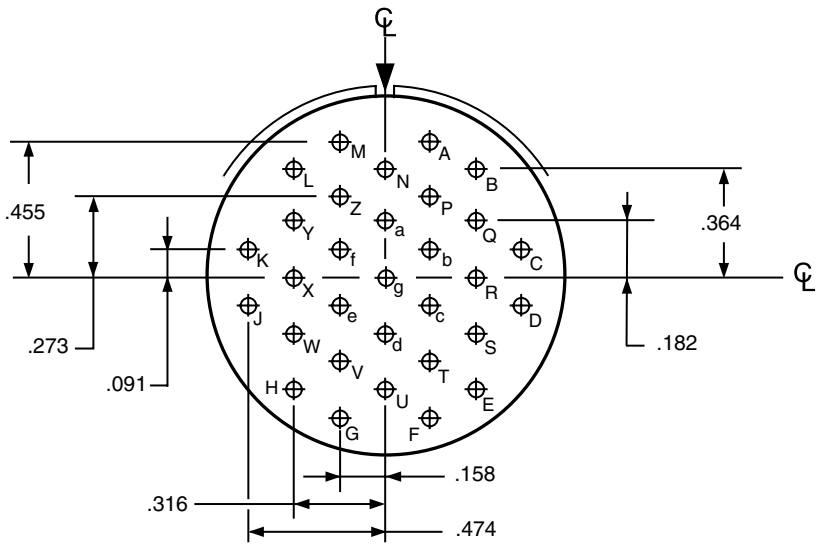

All dimensions for reference only. For alternate rotations see page 47 for Series III, page 87 for Series II, and page 115 for Series I.
Note: Shown in this catalog are the most common insert patterns for PCB applications. For availability of other arrangements, consult Amphenol Aerospace.

PCB Contacts 38999, Series I LJT, II JT, III TV

Insert Arrangements

INSERT ARRANGEMENT #24-35 / 25-35

Connector Type:	JT MIL-DTL-38999 Series II	LJT MIL-DTL-38999 Series I	Tri-Start MIL-DTL-38999 Series III
Insert Designation:	24-35	25-35	25-35

Number of Contacts	Contact Size	Service Rating
128	22D	M

Contact Locations

Front face of pin insert shown

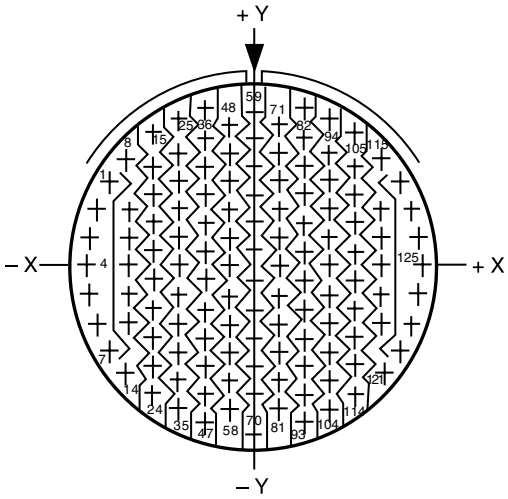

Contact Hole Locations		
Contact Number	Location X Axis	Location Y Axis
1	–.479	+.279
2	–.520	+.190
3	–.546	+.095
4	–.555	.000
5	–.546	–.095
6	–.520	–.190
7	–.479	–.279
8	–.424	+.357
9	–.415	+.190
10	–.415	+.095
11	–.415	.000
12	–.415	–.095
13	–.415	–.190
14	–.424	–.357
15	–.332	+.444
16	–.332	+.332
17	–.332	+.237
18	–.332	+.142
19	–.332	+.047
20	–.332	–.047
21	–.332	–.142
22	–.332	–.237
23	–.332	–.332
24	–.332	–.427
25	–.249	+.496
26	–.249	+.380
27	–.249	+.285
28	–.249	+.190

Contact Hole Locations		
Contact Number	Location X Axis	Location Y Axis
29	–.249	+.095
30	–.249	.000
31	–.249	–.095
32	–.249	–.190
33	–.249	–.285
34	–.249	–.380
35	–.249	–.475
36	–.160	+.531
37	–.166	+.427
38	–.166	+.332
39	–.166	+.237
40	–.166	+.142
41	–.166	+.047
42	–.166	–.047
43	–.166	–.142
44	–.166	–.237
45	–.166	–.332
46	–.166	–.427
47	–.166	–.522
48	–.083	+.475
49	–.083	+.380
50	–.083	+.285
51	–.083	+.190
52	–.083	+.095
53	–.083	.000
54	–.083	–.095
55	–.083	–.190
56	–.083	–.285
57	–.083	–.380
58	–.083	–.475
59	.000	+.522
60	.000	+.427
61	.000	+.332
62	.000	+.237
63	.000	+.142
64	.000	+.047
65	.000	–.047
66	.000	–.142
67	.000	–.237
68	.000	–.332
69	.000	–.427
70	.000	–.555
71	+.083	+.475
72	+.083	+.380
73	+.083	+.285
74	+.083	+.190
75	+.083	+.095
76	+.083	.000
77	+.083	–.095
78	+.083	–.190

Contact Hole Locations		
Contact Number	Location X Axis	Location Y Axis
79	+.083	–.285
80	+.083	–.380
81	+.083	–.475
82	+.160	+.531
83	+.166	+.427
84	+.166	+.332
85	+.166	+.237
86	+.166	+.142
87	+.166	+.047
88	+.166	–.047
89	+.166	–.142
90	+.166	–.237
91	+.166	–.332
92	+.166	–.427
93	+.166	–.522
94	+.249	+.496
95	+.249	+.380
96	+.249	+.285
97	+.249	+.190
98	+.249	+.095
99	+.249	.000
100	+.249	–.095
101	+.249	–.190
102	+.249	–.285
103	+.249	–.380
104	+.249	–.475
105	+.332	+.444
106	+.332	+.332
107	+.332	+.237
108	+.332	+.142
109	+.332	+.047
110	+.332	–.047
111	+.332	–.142
112	+.332	–.237
113	+.332	–.332
114	+.332	–.427
115	+.424	+.357
116	+.415	+.190
117	+.415	+.095
118	+.415	.000
119	+.415	–.095
120	+.415	–.190
121	+.424	–.357
122	+.479	+.279
123	+.520	+.190
124	+.546	+.095
125	+.555	.000
126	+.546	–.095
127	+.520	–.190
128	+.479	–.279

All dimensions for reference only. For alternate rotations see page 47 for Series III, page 87 for Series II, and page 115 for Series I.
Note: Shown in this catalog are the most common insert patterns for PCB applications. For availability of other arrangements, consult Amphenol Aerospace.

Amphenol Aerospace

INSERT ARRANGEMENT #24-61 / 25-61

Connector Type:	JT MIL-DTL-38999 Series II	LJT MIL-DTL-38999 Series I	Tri-Start MIL-DTL-38999 Series III
Insert Designation:	24-61	25-61	25-61

Number of Contacts	Contact Size	Service Rating
61	20	I

Contact Locations
Front face of pin insert shown

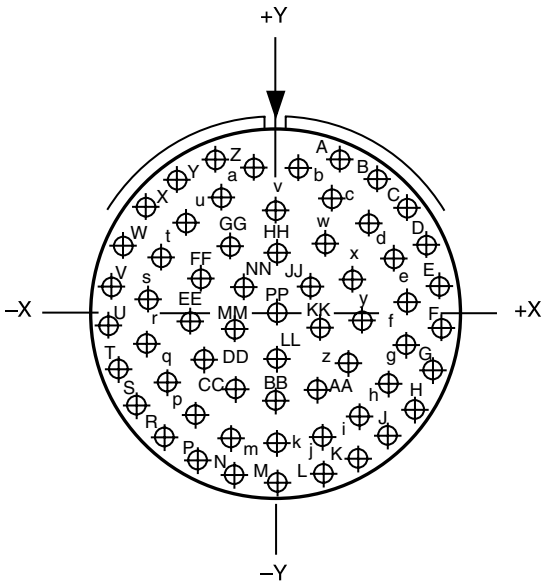

Contact Hole Locations		
Contact Number	Location X Axis	Location Y Axis
A	+.196	+.500
B	+.314	+.435
C	+.413	+.343
D	+.485	+.230
E	+.527	+.101
F	+.536	–.030
G	+.511	–.164
H	+.454	–.287
J	+.368	–.391
K	+.259	–.470
L	+.134	–.519
M	.000	–.537
N	–.134	–.519
P	–.259	–.470
R	–.368	–.391
S	–.454	–.287
T	–.511	–.164
U	–.536	–.030
V	–.527	+.101
W	–.485	+.230
X	–.413	+.343
Y	–.314	+.435
Z	–.196	+.500
a	–.068	+.454
b	+.068	+.454
c	+.173	+.363
d	+.285	+.283
e	+.362	+.175
f	+.399	+.046
g	+.392	–.088

Contact Hole Locations		
Contact Number	Location X Axis	Location Y Axis
h	+.341	–.213
i	+.251	–.314
j	+.133	–.379
k	.000	–.402
m	–.133	–.379
n	–.251	–.314
p	–.341	–.213
q	–.392	–.088
r	–.399	+.046
s	–.362	+.175
t	–.285	+.283
u	–.173	+.363
v	.000	+.338
w	+.147	+.223
x	+.237	+.122
y	+.267	–.010
z	+.228	–.139
AA	+.131	–.233
BB	.000	–.267
CC	–.131	–.233
DD	–.228	–.139
EE	–.267	–.010
FF	–.237	+.122
GG	–.147	+.223
HH	.000	+.200
JJ	+.105	+.094
KK	+.135	–.041
LL	.000	–.132
MM	–.135	–.041
NN	–.105	+.094
PP	.000	.000

All dimensions for reference only. For alternate rotations see page 47 for Series III, page 87 for Series II, and page 115 for Series I.
Note: Shown in this catalog are the most common insert patterns for PCB applications. For availability of other arrangements, consult Amphenol Aerospace.

MIL-DTL-38999, Series I LJT, II JT, III TV, HD

Contact Ratings/ Service Ratings

CONTACT RATING FOR TV III, HD, JT II, LJT I, SJT

Contact Size	Test Current (Amps)		Maximum Millivolt Drop Crimp*	Maximum Millivolt Drop
	Crimp	Hermetic		Hermetic*
23	5	3	73	85
22M	3	2	45	60
22D	5	3	73	85
22	5	3	73	85
20	7.5	5	55	60
16	13	10	49	85
12	23	17	42	85
10 (Power)	33	NA	33	NA
8 (Power)	65	NA	26	NA
4	80	NA	23	NA
0	150	NA	21	NA

*When tested using silver plated wire.

Contact Size	Crimp Well Data		Solder Well Data	
	Well Diameter	Normal Well Depth	Well Diameter	Nominal Well Depth
23	.0345 ± .0010	.141	.0345 ± .0010	.130
22M	.028 ± .001	.141	.029 +.004 – .000	
22D	.0345 ± .0010	.141	.036 +.004 -.000	.094
22	.0365 ± .0010	.141	.036 +.004 -.000	.094
20	.047 ± .001	.209	.044 +.004 -.004	.125
16	.067 ± .001	.209	.078 +.000 -.004	.141
12	.100 ± .002	.209	.116 +.004 -.002	.141
10 (Power)	.137 ± .002	.355	NA	NA
8	.181 ± .002	.490	NA	NA
4	.281 ± .002	.490	NA	NA
0	.453 ± .002	.585	NA	NA

MIL-DTL-38999 SERIES III STANDARD 500 CYCLE CONTACTS FOR TV AND CTV, P & S

Contact Size	TV/CTV Pins		TV/CTV Sockets	
	Military No.	Supersedes	Military No.	Supersedes
8 (Coax)*	M39029/60-367	MS27536	M39029/59-366	MS27535
8 (Power)	Contact Factory	"	"	"
8 (Twinax)	M39029/90-529**	N/A	M39029/91-530	N/A
10 (Power)	M39029/58-528	N/A	M39029/56-527	N/A
12	M39029/58-365	MS27493-12	M39029/56-353	MS27490-12
16	M39029/58-364	MS27493-16	M39029/56-352	MS27490-16
20	M39029/58-363	MS27493-20	M39029/56-351	MS27490-20
22D	M39029/58-360	MS27493-22D	M39029/56-348	MS27490-22D
4	N/A	N/A	N/A	N/A
0	N/A	N/A	N/A	N/A

Above part numbers include standard 500 cycle finish designation - gold plating over suitable underplate in accordance with SAE AS39029. For other finish variations, consult Amphenol Aerospace.

*For use with RG180B/U and RG195A/U cable. For other size 8 coax or optional sizes 12 and 16 coax contacts available for use in Tri-Start connectors, see High Speed catalog or consult Amphenol Aerospace.

MIL-DTL-38999 SERIES III 1500 CYCLE CONTACTS, CLASSES H & J

Contact Size	CTV Pins			CTV Sockets		
	Commercial No.	Military No.	Supersedes	Commercial No.	Military No.	Supersedes
12	10-597072-2X	M39029/107-623	–	10-597073-2X	M39029/106-617	–
16	10-597068-2X	M39029/107-622	–	10-597069-2X	M39029/106-616	–
20	10-597064-2X	M39029/107-621	–	10-597065-2X	M39029/106-615	–
22D	10-597058-3X	M39029/107-620	–	10-597061-2X	M39029/106-614	–

MIL-DTL-38999 SERIES II JT/ SERIES I LJT/SJT SERIES CRIMP CONTACTS

Contact Size	JT/LJT/SJT Pins MS No.	JT Socket MS No.	LJT/SJT Sockets MS No.
8 (Coax)*	M39029/60-367	NA	M39029/59-366
8 (Twinax)	M39029/90-529**	NA	M39029/91-530
10 (Power)	M39029/58-528	NA	M39029/56-527
12	M39029/58-365	M39029/57-359	M39029/56-353
16	M39029/58-364	M39029/57-358	M39029/56-352

Contact Size	JT/LJT Pins MS No.	JT Socket MS No.	LJT/SJT Sockets MS No.
20	M39029/58-363	M39029/57-357	M39029/56-351
22	M39029/58-362	M39029/57-356	M39029/56-350
22M	M39029/58-361	M39029/57-355	M39029/56-349
22D	M39029/58-360	M39029/57-354	M39029/56-348

MIL-DTL-38999 SERIES II JT/ I LJT THERMOCOUPLE CONTACTS

Contact Size	Material	JT/LJT Pins	JT Sockets	LJT Sockets
20	Chromel	10-407862-310	10-407863-310	10-407236-310
	Alumel	10-407862-320	10-407863-320	10-407865-320
	Iron	10-407862-335	10-407863-335	10-407865-335
	Constantan	10-407862-342	10-407863-342	10-407865-342

Partial Listing. If you do not see the contact for your application, consult Amphenol Aerospace.

MIL-DTL-38999 SERIES II JT/ I LJT THERMOCOUPLE CONTACTS PYLE VERSION

Contact Size	Pins (II JT/I LJT)		Sockets (LJT)		Material
	Spec Number	Pyle Number	Spec Number	Pyle Number	
22D	M39029/87-472	T3-4022-10P	M39029/88-484	T3-4122-10P	CHROMEL
22D	M39029/87-471	T3-4022-10R	M39029/88-483	T3-4122-10R	ALUMEL
20	M39029/87-476	T3-4020-10P	M39029/88-488	T3-4120-10P	CHROMEL
20	M39029/87-475	T3-4020-10R	M39029/88-487	T3-4120-10R	ALUMEL
16	M39029/87-480	T3-4016-10P	M39029/88-492	T3-4116-10P	CHROMEL
16	M39029/87-479	T3-4016-10R	M39029/88-491	T3-4116-10R	ALUMEL

Above part numbers include standard finish designation - gold plating over suitable underplate in accordance with MIL-DTL-39029. For other finishes, consult Amphenol Aerospace. Note: 22M and 22D contacts are interchangeable. *For use with RG180B/U and RG195A/U cable. For other size 8 coax or optional sizes 12 and 18 coax contacts available for use in JT/LJT connectors, Refer to the High Speed Catalog. ** For use with 17/M176-00002 cable.

MIL-DTL-38999 SERIES III SEALING PLUGS

Contact Size	Commercial No.	Military No.
8 (Coax)	10-482099-8	N/A
8 (Twinax)	T3-4008-59P	N/A
8 (Power)	10-405996-83	MS27488-8-3
10 (Power)	T3-4010-59P	M85049/81-10
12	10-405996-122	MS27488-12-2
16	10-405996-162	MS27488-16-2
20	10-405996-202	MS27488-20-2
22D	10-405996-222	MS27488-22-2
4	10-405996-43	MS27488-4-3
0	10-405996-03	MS27488-0-3

MIL-DTL-38999 SERIES II JT/ I LJT SEALING PLUGS

Contact Size	Commercial No.	Military No.
8 (Coax)	10-482099-8	MS27488-8
8 (Twinax)	T3-4008-59P	N/A
10 (Power)	10-576225	N/A
12	10-405996-122	MS27488-12-2
16	10-405996-162	MS27488-16-2
20	10-405996-202	MS27488-20-2
22	10-405996-222	MS27488-22-2
22M	10-405996-222	MS27488-22-2
22D	10-405996-222	MS27488-22-2

SJT SEALING PLUGS

Contact Size	Commercial No.
8 (Coax)	10-482099-8
8 (Twinax)	10-482099-8
10 (Power)	NA
12	10-405996-012 Yellow
16	10-405996-016 Blue
20	10-405996-020 Red
22	10-405996-022 Black
22M	10-405996-022 Black
22D	10-405996-022 Black

** For use with M17/M176-00002 cable.
† Optional design - see slash sheet MS39029.
For other contact options available for use in Tri-Start connectors (wire wrap, thermocouple, fiber optic), consult Amphenol.

MIL-DTL-38999, Series I LJT, II JT, III TV

Thermocouple Contacts/Sealing Plugs/Finishing Data

SERVICE RATING**

Service Rating	Suggested Oper. Voltage (Sea Level)		Test Voltage (Sea Level)	Test Voltage 50,000 Ft.	Test Voltage 70,000 Ft	Test Voltage 110,000 Ft.
	AC (RMS)	DC				
M	400	500	1300 VRMS	550 VRMS	350 VRMS	200 VRMS
N	300	450	1000 VRMS	400 VRMS	260 VRMS	200 VRMS
I	600	850	1800 VRMS	600 VRMS	400 VRMS	200 VRMS
II	900	1250	2300 VRMS	800 VRMS	500 VRMS	200 VRMS

** Please note that the establishment of electrical safety factors is left entirely in the designer's hands, since they are in the best position to know what peak voltage, switching surges, transients, etc. can be expected in a particular circuit.

FINISH DATA MIL-DTL-38999, TRI-START, SERIES III TV

ALUMINUM SHELL COMPONENTS NON-HERMETIC*		
Finish	Service Class	
	Military	Commercial
Anodic Coating (Non-Conductive)	C*	RX**
Electroless Nickel	F (Metal)*	RF
	M (Composite)	
Olive Drab Cadmium Plate Nickel Base	W (Metal)*	RW
	J (Composite)	
Stainless Steel with Nickel Plate (non-firewall)	L	
Stainless Steel with Nickel Plate (firewall)	S	RS
Stainless Steel	K	RK
Durmalon plated	T*	DT
Zinc-Nickel Plated	Z*	DZ
Electroless Nickel Space Grade	G	

**Add Suffix (005) to part number.

HERMETIC SHELL COMPONENTS		
Material/Finish	Service Class	
	Military	Commercial
Stainless Steel	Y	Y
Stainless Steel with Nickel Plate	N	YN

FINISH DATA MIL-DTL-38999, SERIES I LJT, II JT

ALUMINUM SHELL COMPONENTS NON-HERMETIC					
Finish	Suffix		Finish Plus "SR" Suffix	Indicated Finish Standard for JT Types Listed Below	Indicated Finish Standard for LJT Types Listed Below
	Military	Commercial			
Cadmium Plated Nickel Base	MS (A)	–	(SR)	JT/JTG/JTL/JTP	LJT/LJTP
Anodic Coating (Alumilite)	MS (C)	(005)	(300)	JTS/JTPS/JTLS	LJTPS/LJTS
Chromate Treated (Iridite 14-2)		(011)	(344)	JTN/JTPN/JTLN	LJTN/LJTPN
Olive Drab Cadmium Plate Nickel Base	MS (B)	(014)	(386)		
Electroless Nickel	MS (F)	(023)	(424)		
Nickel-PTFE Durmalon		(038)			
Space Grade		(453)			

HERMETIC CONNECTORS				
Finish	Suffix		Indicated Finish Standard for JT Types Listed Below	Indicated Finish Standard for LJT Types Listed Below
	Military	Commercial		
Carbon Steel Shell Tin Plated Shell and Contacts			JT( )H / JT( )Y JTL( )H / JTL( )Y	LJT( )Y LJT( )H
Carbon Steel Shell Tin Plated Shell and Gold Plated Contacts	MS (D)			
Stainless Steel Shell Gold Plated Contacts	MS (E)	(162)	JTS( )Y JTLS( )Y	LJTS( )Y

Amphenol RoHS Compliant Platings

Alternative to Cadmium

Amphenol Aerospace

DURMALON™

Amphenol's Answer to EU RoHS/ELV/Cadmium Free Restrictions

Commercial, industrial & military markets are rapidly moving away from restricted materials such as Cadmium (Cd) & Hexavalent Chromium (Cr(VI)). Both of these restricted materials are toxic and are known carcinogens. Amphenol is offering an alternative finish that complies with all customer requirements tied to these specifications.

MIL-DTL-38999, Rev L has established new service classes for alternative finishes addressing these requirements for Cadmium replacement. Amphenol is using this and European Union Directive 2002/95/EC RoHS (Regulation of Hazardous Substances) as a guide to qualification for all domestic, global, commercial, industrial, & military specifications requiring the reduction or elimination of these restricted materials.

Amphenol has qualified Durmalon, with internal part number coding "DT" finish, which meets or exceeds the 38999 designated class "T" finish, Nickel Fluorocarbon Polymer. Durmalon is also EU RoHS compliant and is Cadmium free, Lead free, and Hexavalent Chromium free.

We also offer additional platings such as "DX", (Durmalon, heavy duty final plate) to support JSF, F-35 program. The DX plating is intended to meet higher corrosion Sulfur Dioxide (SO2)/salt fog requirements of JSF.

Cadmium has been applied to numerous components of land, sea and air weapon systems and NASA systems for many years as it provides sacrificial corrosion protection and excellent lubricity for threaded applications.

The Defense Logistics Agency (DLA) has added the following cadmium alternative finishes to MIL-DTL-38999, Rev L (and other connector specs):

- Nickel Fluorocarbon Polymer
- Zinc-Nickel

AMPHENOL'S DURMALON™

Durmalon, like Olive-Drab Cadmium plating (Class W), meets 500 hours of dynamic salt spray, combined with 500 mating cycles and meets specified millivolt drop shell-to-shell conductivity. Durmalon also meets a 200° C temperature rating. Durmalon has been proven to meet this requirement as well as Potassium Formate-Deicer fluid testing performed by Boeing.

DURMALON™
Alternative to Cadmium

APPLICATIONS

Interest for non-hazardous alternative finishes is gaining momentum & many customers are currently using Durmalon for a broad number of applications. Durmalon combines the unique lubrication and anti-wetting properties of PTFE with corrosion resistance, high conductivity and EU RoHS compliance in a non-reflective finish.

TESTING

Amphenol Aerospace has performed extensive testing on numerous alternative platings with the most consistent performer being the Durmalon. For specific applications please contact Amphenol Aerospace.

BLACK ZINC NICKEL

Black Zinc Nickel is Amphenol's 2nd RoHS Compliant Plating Alternative to Cadmium Amphenol is now offering a new RoHS compliant alternative to Cadmium. Black Zinc Nickel is a non-reflective and conductive black finish approved for 500 hrs salt spray making it an excellent choice for harsh environments. Black Zinc Nickel has been qualified by the DLA, with internal part number coding "DZ" finish, which meets or exceeds the 38999 designated class "Z" finish. Black Zinc Nickel is compatible with other platings and available on a wide variety of connectors and accessories including all MIL-DTL-38999 Series III connectors.

APPLICATIONS

Interest for non-hazardous alternative finishes are gaining momentum & many customers are currently using Black Zinc Nickel for a broad number of applications. Black Zinc Nickel is typically used on applications for commercial aerospace and military defense, who are now moving away from toxic Cadmium to more environmentally friendly options.

TESTING

Amphenol Aerospace has performed extensive testing on numerous alternative platings including Black Zinc Nickel. For specific applications please contact Amphenol Aerospace.

Requirements	Cadmium	Durmalon™	Black Zinc Nickel
Coupling Torque Post 500 hr. salt	■	■	■
Shell to Shell Conductivity <2.5 millivolts	■	■	■
Cycles of Durability 500 mates	■	■	■
Salt Spray Dynamic 500 hours	■	■	■
Temperature Rating 175° C	■	■	■
Non-Reflective	■	■	■
EU RoHS/ELV Compliant*		■	■
Non-Magnetic	■	■	■
De-icing Fluid**		■	■

* Meets EU RoHS/ELV maximum concentration values (MCV) of 1000 ppm (0.1% w/w) or (0.01% w/w) per homogenous material.

** Potassium Formate/Acetate based de-icing fluids.

Note: Specifications are subject to change without notice.

MIL-DTL-38999, Series III, TV

A

TABLE OF CONTENTS FOR SECTION A

Combined MIL-DTL-38999 Series I, II, III
Shell Size & Insert Arrangements Availability 2-6
Insert Arrangement Drawings 7-14
PCB Insert Arrangements 15-29
Contact - Ratings, Service Ratings, Finish Data 30-32
Amhenol RoHS Compliant Plating 33

MIL-DTL-38999, Series III TV
Performance, Options 35, 36
Test Data 37
Weight Comparison (Composite vs. Metal) 38
Dualok 39
HD38999, High Density 40
Custom 41
Configurator 42
How to Order (Military & Commercial) 43-47
How to Order (Boeing BACC63) 48

TV SHELL STYLES:

Crimp Wall Mounting Receptacle TVP00R (D389999/20) /CTVP00R (Military D38999/20) 49
Crimp Box Mounting Receptacle TVP02R / CTVP02R . . . 50
Line Receptacle TV01, TVS01, CTV01, CTVS01 51
Crimp Jam Nut Receptacle TV07R (D38999/24) / CTV07R (Military D38999/24) 52
Straight Plug TV06, TVS06, CTV06, CTVS06 (Military D38999/26). 53
Crimp Flange Mounting Plug TV09R 54
Dualok Plug/Receptacle TV56, TVS56, CTV56, CTVS56. . . 55
RotoLok High Vibration Plug Solutions 56

PCB:

PCB Wall Mounting, Back Panel TVP00, TVPS00 57
PCBWall Mounting, Back Panel, Clinch Nuts, TVP10, TVPS10 58
PCB Wall Mounting, Double Flange, TVP40, TVPS40 59
PCB Box Mounting Receptacle, TVP02, TVPS02 60
PCB Box Mounting Receptacle, Clinch Nuts, TVP12, TVPS12 61
PCB Jam Nut Receptacle, TV07, TVS07 62
PCB Jam Nut Receptacle, Double Flange, TVP47, TVPS47 . 63
PCB Hermetic Box, Jam Nut, Solder , Weld Mounting. . . 64-67

HERMETIC:

Hermetic Box Mounting TVPS02Y(D38999/21) 68
Hermetic Jam Nut Receptacle TVS07Y (D38999/23) . .69
Hermetic Solder Mounting TVSIY (D38999/25) 70
Hermetic Weld Mounting TVSHIY (D38999/27) 70

BREAKAWAY:

Breakaway Fail-Safe Connectors 71
How to Order Breakaway (Military) 72, 73
How to Order Breakaway (Commercial) 74
Fail-Safe Lanyard Release Plug 75
How to Order Breakaway MIL-STD-1760 (Military) . . .76
TV Breakaway (D38999/31) for MIL-STD-1760 77
TV Breakaway Commercial Version for D38999/31, Type 6 78
How to Order Commercial Version D38999/31, Type 6 .79
Insert Arrangements for Breakaway Fail-Safe 80
Breakaway Fail-Safe 88-725041, 88-725014 81
Breakaway Hybrid, Low Profile Lanyard Release Plug. .82
Stores Management Type II, Rail Launch (MIL-STD-1760) 82

Accessories:

Section F 165-183

Amphenol Aerospace

TRI-START™ MIL-DTL-38999 SERIES III WITH METAL SHELLS - ALUMINUM, STAINLESS STEEL, CLASS K FIREWALL

Amphenol® Tri-Start MIL-DTL-38999* Series III Connectors offer the highest performance capabilities for both general duty and severe environment applications. Meeting or exceeding MIL-DTL-38999 Series III requirements, the Tri-Start connector with standard metal shells (aluminum or stainless steel with several finish options) offers these features:

- **EMI Shielding** - solid metal-to-metal coupling, grounding fingers, electroless nickel plating, and thicker wall sections provide superior EMI shielding capability of 65dB minimum at 10 GHz
- **Contact Protection** - recessed pins in this 100% scoop-proof connector minimize potential contact damage
- **Moisture Resistance** - improved interfacial seal design helps prevent electrolytic erosion of contacts
- **Corrosion Resistance** - shells of stainless steel or cadmium over nickel plating withstand a 500 hour salt spray exposure
- **Vibration/Shock** - operates under severe high temperature vibration, through 200°C
- **Firewall Capability** - available in a stainless steel shell, class RK, RS
- **Lockwiring Eliminated** - unique, self-locking, quick coupling connector eliminates lockwiring
- **Quick Coupling** - completely mates and self-locks in a 360° turn of the coupling nut
- **Inventory Support Commonality** - uses standard MIL-DTL-38999 contacts, application tools, insert arrangements
- **Electrostatic Discharge Protection (ESD)** - protection for sensitive circuitry without diodes, varistors, etc., with the use of the Faraday Cage principle which shunts high voltage, high current discharge events (see page Amphenol Filter Section)
- **Hermetic**- air leakage limited to 1 X 10^{-7} cm^3 per second optional
- **Qualified Specifications** - Stainless Steel qualified to BACC63DB and BACC63DC specifications

PASSIVATED STAINLESS STEEL

ELECTROLESS NICKEL

OLIVE DRAB CADMIUM

DURMALON PLATED

ZINC NICKEL PLATED

MIL-DTL-38999, Series III TV

Options

OFFER MORE VERSATILITY & OPTIONS THAN ANY OTHER INTERCONNECTION FAMILY!

HD38999

DUALOK

FILTER

PC TAILS

FAIL SAFE

CLUTCH-LOK

FIBER OPTICS

HIGH SPEED

HERMETIC

FLEX

Composite Connector Patents:
4,268,103; 4,648,670; 4,682,832; 4,703,987.
Clutch-Lok® Patent 6,152,753.

High reliability and increased versatility best describe Amphenol MIL-DTL-38999, Series III circular connectors. Originally designed for the harshest of environments and most demanding of applications, Amphenol MIL-DTL-38999 Series III, Tri-Start connectors continue to evolve in pace with the needs of an ever-changing market.

Amphenol Tri-Start connectors can be configured with a number of application specific technologies like:

- High Density HD38999
- Dualok
- PC Tails
- Filters
- Fail Safe
- CLUTCH-LOK
- Fiber Optics
- High Speed Contacts
- Hermetics
- Flex

Flexibility aids in design optimization through the combination of different technologies within a common, time-tested, harsh environment connector body.

For more information about options, please call 800-678-0141 or visit www.amphenol-aerospace.com.

Amphenol Aerospace

TRI-START, SERIES III TYPICAL SHIELDING EFFECTIVENESS TEST DATA

EMI/EMP SHIELDING EFFECTIVENESS dB
TESTING BY TRIAXIAL METHOD

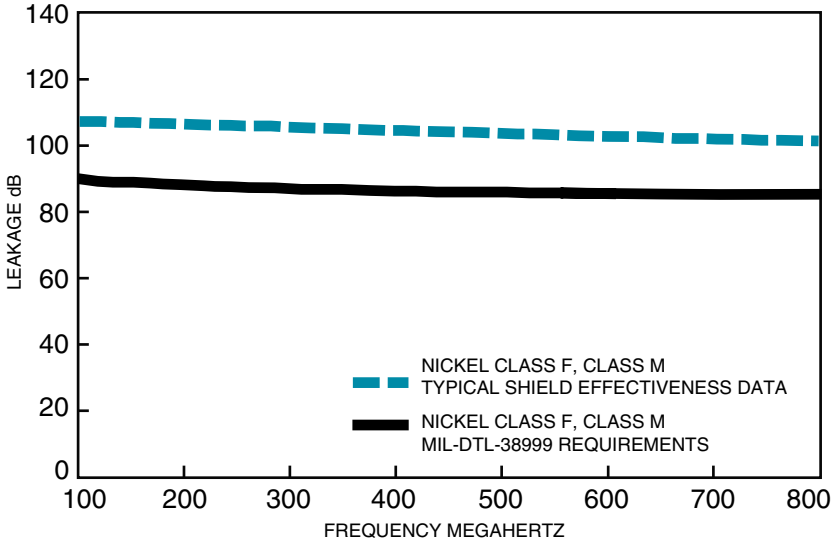

AMPHENOL® TRI-START CONNECTORS PROVIDE EMI/EMP SHIELDING CAPABILITY WHICH EXCEEDS MIL-DTL-38999 SERIES III REQUIREMENTS.

The TV and CTV Series III connector with standard solid metal-to-metal coupling, EMI grounding fingers and conductive finishes have proven to be the ultimate in EMI/EMP shielding effectiveness. The charts illustrate shielding effectiveness data which is typical of Tri-Start connectors tested with the nickel finish (Class F-metal, Class M-composite) over a wide frequency range.

The vibration capability of the Tri-Start Series is shown in the chart below. This illustrates the most severe vibration envelope of any qualified connector available today.

These capabilities along with a +200°C, -65°C temperature rating and superior moisture sealing protection provide the user with a connector that can withstand the most rigorous application.

TRI-START, SERIES III TYPICAL SHIELDING EFFECTIVENESS TEST DATA

EMI/EMP SHIELDING EFFECTIVENESS dB
TESTING BY MODE STIRRING METHOD

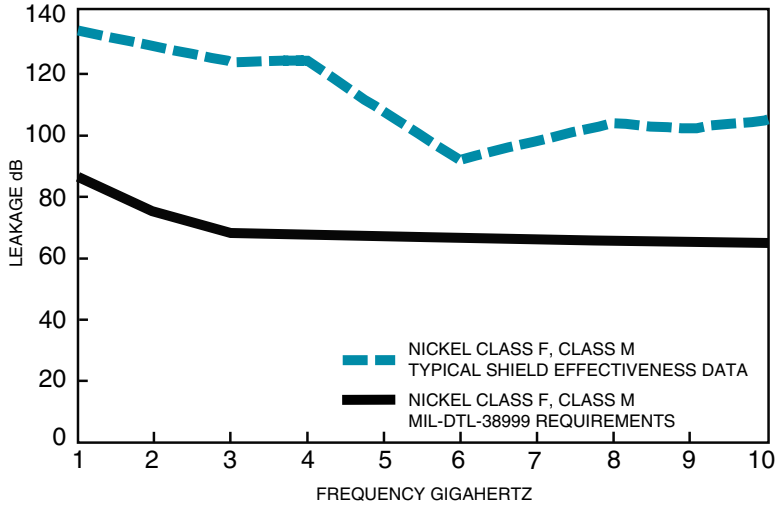

TRI-START VIBRATION CRITERIA

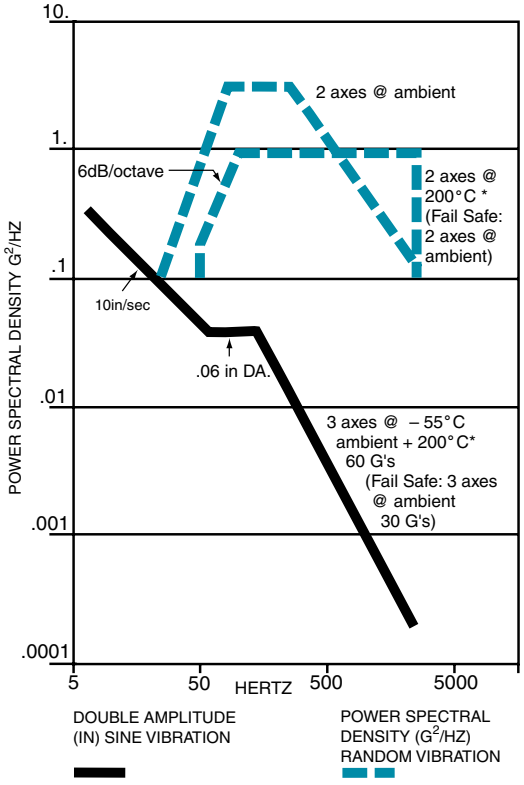

* Dependant on shell finish

Test data beyond 2GHz is subject to equipment variation.

NOTE: For test data information on the new Clutch-Lok Tri-Start, high vibration connectors, consult Amphenol Aerospace.

MIL-DTL-38999, Series III TV

Weight Comparisons (Composite vs. Metal)

Depending on the shell style, shell size and contact count, weight savings can range from 17% to 40% compared to standard aluminum product.

Tri-Start Weight in Ounces (includes contacts)

	Wall Mount Receptacle (00) + Military D38999/20						Jam Nut Receptacle (07) + Military D38999/24						Plug (06) + Military D38999/26					
	Stainless Steel		Aluminum		Composite		Stainless		Aluminum		Composite		Stainless Steel		Aluminum		Composite	
	Pin	Socket	Pin	Socket	Pin	Socket	Pin	Socket	Pin	Socket	Pin	Socket	Pin	Socket	Pin	Socket	Pin	Socket
9-35	.7216	.7840	.3248	.3777	.2588	.3121	1.1472	1.2096	.4416	.5040	.3489	.4413	1.0736	1.1360	.4236	.4625	.2606	.2994
9-98	.7216	.7776	.2496	.3056	.1664	.2224	1.1472	1.2032	.4416	.4976	.3744	.4640	1.0736	1.1296	.3968	.4624	.2991	.2337
11-35	.9488	1.0800	.3632	.4960	.2753	.4081	1.4304	1.5632	.5936	.7264	.4679	.6007	1.2480	1.3808	.5312	.6389	.3450	.4582
11-98	.9488	1.0620	.3632	.4768	.2753	.3889	1.4304	1.5440	.5936	.7072	.4679	.5815	1.2480	1.3616	.5330	.6283	.3468	.4457
13-8	1.2096	1.3888	.4800	.6592	.3696	.5488	1.9104	2.0896	.7664	.9456	.6560	.8352	1.8048	1.9840	.7936	.9728	.5237	.5952
13-35	1.2160	1.4320	.4864	.7024	.3762	.5922	1.9168	2.1328	.7728	.9888	.6136	.8296	1.8112	2.0272	.8000	.8472	.5301	.6531
13-98	1.2160	1.4016	.4864	.6720	.3762	.5618	1.9168	2.1024	.7728	.9584	.6136	.7992	1.8112	1.9968	.7978	.9856	.5244	.7157
15-5	1.5312	1.7904	.6352	.8944	.5027	.7619	2.3792	2.6384	.9728	1.2320	.7749	1.0341	2.2704	2.5456	.9632	1.1719	.6450	.8467
15-18	1.5456	1.8416	.7760	.9456	.6432	.8128	2.3936	2.6896	.9872	1.2832	.8544	1.1504	2.2848	2.5808	.9776	1.2736	.6594	.8208
15-35	1.5424	1.8768	.6464	.9808	.5139	.8483	2.3904	2.7344	.9840	1.3280	.7861	1.1301	2.2816	2.6256	1.2179	1.3184	.8961	1.0002
17-6	2.1488	2.5904	.9360	1.3776	.7812	1.2228	2.9152	3.3568	1.2336	1.6752	.9940	1.4356	2.5008	3.1024	1.1408	1.7424	.8160	1.4176
17-26	2.1344	2.5600	.9216	1.3472	.7668	1.1924	2.9008	3.3264	1.2192	1.6448	.9796	1.4052	2.4864	2.9120	1.1264	1.3343	.8017	.8062
17-35	2.1360	2.6640	.9232	1.4512	.7684	1.2964	2.9024	3.4304	1.2208	1.7488	.9812	1.5092	2.4880	3.0160	1.1280	1.5497	.8033	1.2144
19-11	2.2592	2.6656	.9696	1.4528	.7925	1.2757	3.4352	3.9184	1.4720	1.9552	1.2033	1.6865	2.9808	3.4640	1.3472	1.8304	.9632	1.4464
19-32	2.1888	2.7264	.9760	1.5136	.7989	1.3365	3.4416	3.9792	1.4784	2.0160	1.2097	1.7473	2.9872	3.5248	1.3536	1.8912	.9696	1.5072
19-35	2.1920	2.8432	.9792	1.6304	.8021	1.4533	3.4448	4.0960	1.4816	2.1328	1.2129	1.8641	2.9904	3.6416	1.3568	2.0080	.9728	1.6240
21-11	2.7456	3.4640	1.3088	2.0272	1.1088	1.8272	3.9712	4.6896	1.8128	2.5312	1.6128	2.3312	3.4448	4.1632	1.7344	2.5312	1.3039	1.8710
21-16	2.6784	3.3168	1.2416	1.8800	1.0422	1.6806	3.9040	4.5424	1.7456	2.3840	1.4505	2.0889	3.3776	4.0160	1.6672	2.3168	1.2352	1.8736
21-35	2.6672	3.4992	1.2304	2.0624	1.0310	1.8630	3.8928	4.7248	1.7344	2.5664	1.4393	2.2713	3.3664	4.1984	1.6560	2.2309	1.2255	1.8003
21-41	2.6768	3.3600	1.2400	1.9232	1.0406	1.7238	3.9024	4.5856	1.7440	2.4272	1.4489	2.1321	3.3760	3.5792	1.6656	1.8688	1.2336	1.4368
23-21	3.0352	3.8624	1.4496	2.2768	1.2279	2.0551	4.2368	5.0640	1.9440	2.7712	1.6368	2.4640	3.7920	4.6192	1.9216	2.7488	1.4637	2.2896
23-35	3.0240	4.0448	1.4384	2.4592	1.2167	2.2375	4.2256	5.2464	1.9328	2.9536	1.6256	2.6464	3.7808	4.8016	1.9104	2.6087	1.4525	2.1507
23-53	2.8992	3.9072	1.4560	2.4816	1.2343	2.2599	4.2432	5.1088	1.9504	2.8160	1.6432	2.5088	3.7984	4.6640	1.9280	2.7936	1.4672	2.2384
25-4	3.4512	4.4800	1.7312	2.8816	1.4864	2.1904	4.8048	5.8272	2.2016	3.2480	1.9568	2.8720	4.2224	5.2496	2.2128	3.2560	1.7133	2.4163
25-19	3.5312	4.7264	1.8112	3.0064	1.5664	2.7616	4.8848	6.0816	2.2816	3.4784	2.0368	3.2336	4.3024	5.4992	2.2928	3.4896	1.7933	2.7058
25-20	3.8190	4.7150	2.0173	3.1125	1.7733	2.8512	5.1430	6.0380	2.4877	3.5421	2.1872	3.2416	4.4350	5.3300	2.2580	3.0182	1.8288	2.8928
25-35	3.4416	4.6656	1.7216	2.9456	1.4776	2.7016	4.7952	6.0192	2.1920	3.4160	1.8915	3.1155	4.2128	5.4368	2.2032	3.4272	1.7037	2.9277
25-61	3.4304	4.4848	1.7282	2.7648	1.4841	2.5208	4.7840	5.8384	2.1808	3.2352	1.8803	2.9347	4.2016	5.2560	2.1920	3.2464	1.6912	2.7456

All weight measurements are for reference only.

High Vibration Dualok, 38999 Series III Type

Amphenol Aerospace

Features and Benefits

The Dualok represents the latest in high performance connector designs from Amphenol. Featuring a newly developed locking mechanism, the Dualok plug ensures rock-solid coupling and metal-to-metal bottoming in the most severe vibration environments.

New High Vibration Dualok Connector

DUALOK FEATURES AND BENEFITS INCLUDE:

- Mates with standard D38999 receptacles and utilizes standard D38999 inserts.
- Designed to withstand and stay mated under vibration levels that exceed MIL-DTL-38999 levels
- Dualok stainless steel provides a weight savings of up to 42% compared to standard D38999 stainless steel designs
- Stainless steel, aluminum, composite, or aluminum bronze materials of construction
- Dualok aluminum provides ~ 10% weight reduction over D38999 Aluminum
- Coupling mechanism that does not "settle" under vibration levels exceeding MIL-DTL-38999
- Metal-to-metal bottoming for maximum EMI shielding under extreme vibration

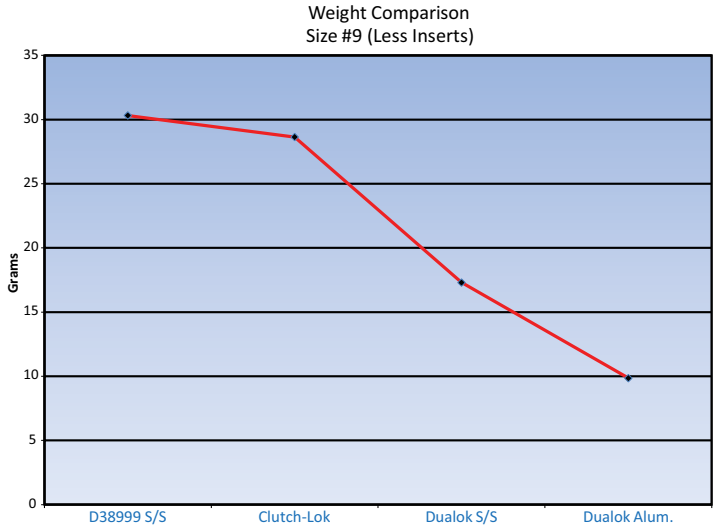

CLUTCH-LOK™ MIL-DTL-38999, SERIES III HIGH VIBRATION CONNECTOR

The Tri-Start option CLUTCH-LOK offers all advantages of stainless steel/Class K firewall for MIL-DTL-38999 Series III connectors, plus a unique clutch design that actually tightens itself under vibration. Features include:

- High degree of differential torque
- No settling back to the next ratchet tooth
- Completely intermateable with all existing MIL-DTL-38999
- Series III connectors
- Offers advantage in inaccessible, hard to reach areas where mating torque is difficult to apply and complete coupling is not verifiable by inspection

See page 32 for description,
45 – 47 for ordering.

OPTIONAL SHELL GEOMETRIES

Amphenol offers a number of different shell configurations to fit your needs

- Deep Reach Shells - For increased panel thickness
- Stand-off Flange Shells - For attachments to Printed Circuit Boards.
- Connector with Integral Strain Reliefs

High Density Interconnects

HD38999: 9 to 187 Contacts

The HD38999 family of connectors has 30% more contact density than the highest density Mil Spec 38999 connectors of its size. This series of connectors was designed to utilize mil-specified 38999 components with the exception of the contacts and inserts arrangement. Utilizing existing mil-qualified 39029 size 23 contacts and 38999 insert materials, these connectors are essentially a drop-in replacement for the standard 38999 connector.

This connector design benefits users in a couple of different ways. For those users who need to increase the amount of contacts in their application, the HD38999 series allows them to do so without increasing the size of their connector. For users who are looking to decrease the overall size of their system, they can do so by using smaller shell sizes without decreasing the number of contacts.

Amphenol has qualified this series of connectors to the requirements of MIL-DTL-38999. Amphenol also manufacturers this high density series in Filter, Hermetic and customized versions to fit our customer's needs. Please contact us if additional information is required.

TECHNICAL DATA

HD38999 series was designed to meet and/or exceed the specifications of MIL-DTL-38999. The connector series has been tested to all the requirements of 38999 with the use of AS39029 size 23 contacts. Test reports are available upon request. The following is a summary of some of the performance requirements.

EMI SHIELDING EFFECTIVENESS:

Solid metal to metal coupling, EMI grounding fingers and conductive finishes have proven to be the ultimate in EMI/EMP shielding effectiveness. The following chart illustrated shielding effectiveness data which is typical in HD38999 connectors.

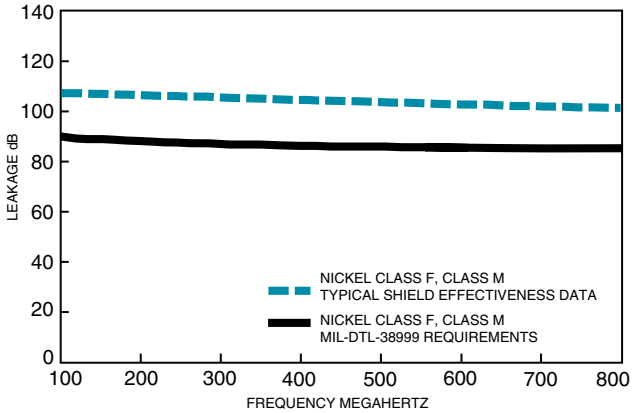

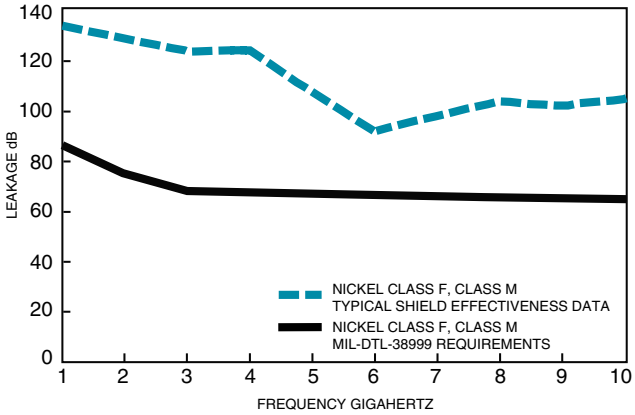

ELECTRICAL:

22 AWG: 5.0 AMPS
24 AWG: 3.0 AMPS
26 AWG: 2.0 AMPS
28 AWG: 1.5 AMPS

Insulation Resistance: 5000 megohms min.@500 VDC 25C
Dielectric Withstanding Voltage: 1000 VRMS@sea level

MECHANICAL:

Metallic Shells:	Material:	Aluminum alloy, Stainless Steel
	Protection:	Electroless Nickel, O.D. Cadmium, Durmalon (Nickel PTFE), Zinc Nickel
Composite Shells:	Material:	Thermoplastic
	Protection:	Electroless Nickel, O.D. Cadmium, Durmalon (Nickel PTFE), Zinc Nickel
Contacts:	Material:	Copper Alloy
	Protection:	Gold over Nickel
Insert Retention to Shell:		100 psi in axial load
Durability:		500 full mating and unmating cycles
Vibration:		60G sine per MIL-DTL-38999L Para 4.5.23.2.1 5G2 Random per EIA-364-28E, Test condition A 1G2 Random per EIA-364-28E, Test condition I
Shock:		Per EIA-364-27B, 300g

ENVIRONMENTAL:

Operating Temperature:	–65°C to +175°C
Salt Spray: Metallized:	Electroless Nickel: 48 hours Anodic Coating, O. D. Cadmium, Durmalon, Zinc Nickel: 500 hours
Salt Spray Composite:	Electroless Nickel: 1000 hours O. D. Cadmium, Durmalon, Zinc Nickel: 500 hours

Custom Designed HD38999 Connectors and Alignment Disks

Amphenol Aerospace

NEW CUSTOM DESIGNED HD38999 CONNECTORS - PROVIDE MORE INTERCONNECT SOLUTIONS:

HD38999 High Density

ALIGNMENT DISKS

Alignment disks keep contacts aligned for easier insertion into circuit boards. These are typically ordered with the connector - see step 7 of How to Order on page 47.

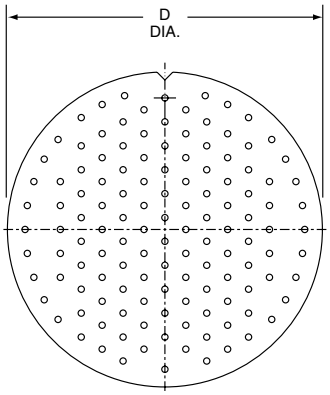

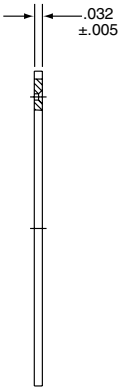

Shell Size	D Dia. ±.010
9	.234
11	.350
13	.500
15	.725
17	.750
19	.850
21	.953
23	1.147
25	1.250

FILTERED HD38999 CONNECTORS - FOR EMI/EMP PROTECTION

High density patterns are available in filter 38999 connectors - consult Amphenol Aerospace for ordering.

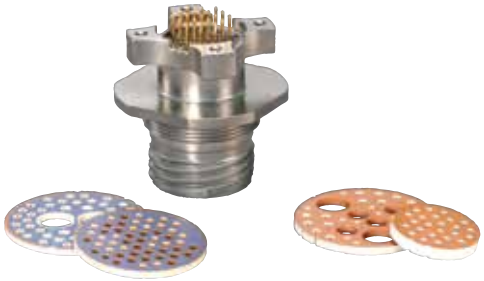

HD38999 FOR GIGABIT ETHERNET APPLICATIONS

The HD38999 is available for high speed (Gigabit Ethernet) data transmission in the size 9-9 insert pattern.

Data transmission performance of this connector insert:

- 10 Base T, 100 Base TX, and 1000 Base T networks using Cat 5e per TIA/EIA568B and Class D per ISO/IEC 11801.
  (Test report available - consult Amphenol Aerospace for more information)

Signal-Ground Pin Configuration
Wiring Recommendations

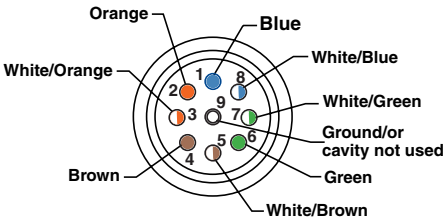

View Rear of Connector

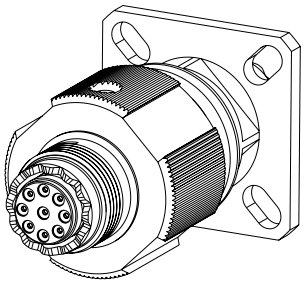

HD38999 Connector with 9-9 Insert Pattern (Rear View)

MIL-DTL-38999, Series III TV, Configurator

Online at www.amphenol-aerospace.com

Now you can build a part number for Military and Commercial MIL-DTL-38999 Series III through our online configurator, located on the home page of www.amphenol-aerospace.com.

After building a part number, you have the option to download the drawing and specifications, buy if available through distribution channels, Request a Quote and the ability to download multiple part numbers to a list to manage your needs.

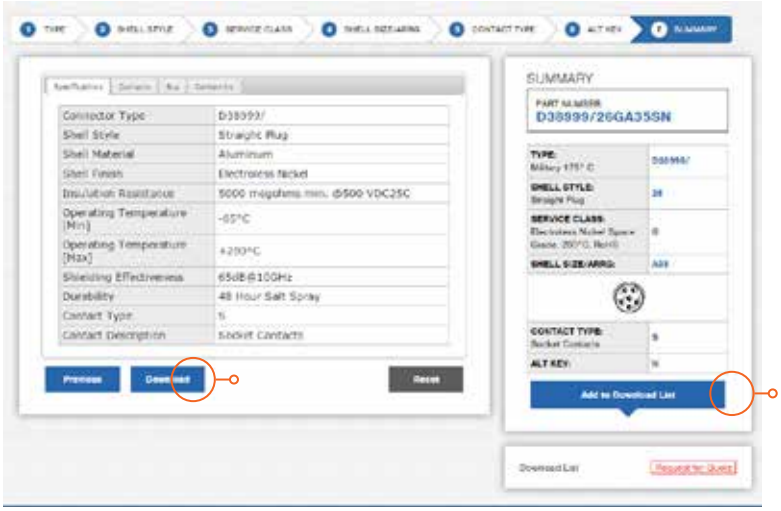

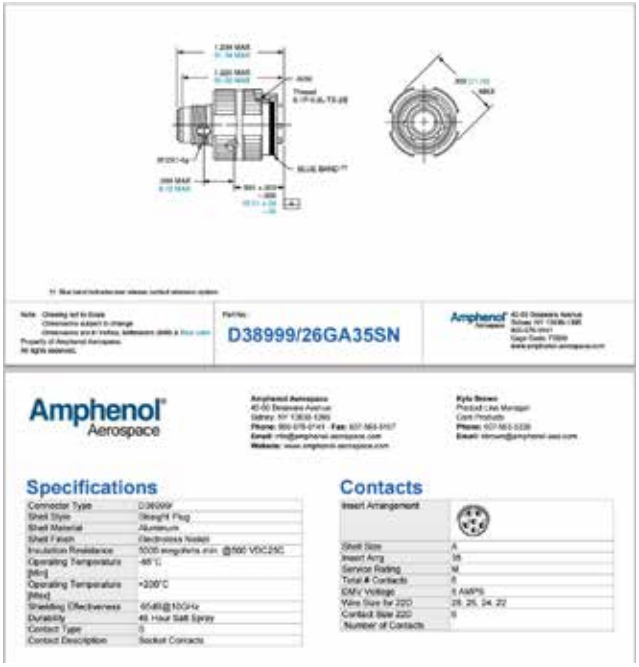

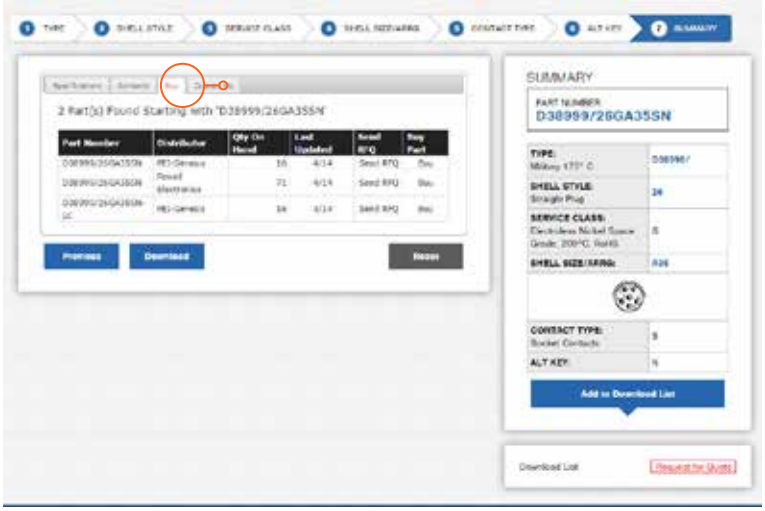

Military to Commercial Shell Style Conversion Table

Amphenol Aerospace

How to Order (Military)

MILITARY	DESCRIPTION	COMMERCIAL
D38999/20	Wall Mounting Receptacle	TVP00 or TVPS00 (AL & SS); CTVP00, CTVPS00 (Composite)
D38999/21	Hermetic Box Mounting Receptacle	TVPS02Y, TVPS02YN
D38999/23	Hermetic Jam Nut Receptacle	TVS07Y, TVS07YN
D38999/24	Jam Nut Receptacle	TV07, TVS07 (AL & SS); CTV07, CTVS07 (Composite)
D38999/26	Straight Plug	TV06, TVS06
D38999/25	Solder Mount Receptacle (Hermetic)	TVSI
D38999/27	Weld Mounted Receptacle (Hermetic)	TVSHI

HOW TO ORDER: MILITARY

1. Connector Type	2. Shell Style	3. Service Class	4. Shell Size– Insert Arrangement	5. Contact Type	6. Alternate Keying Position
D38999/	20	J	G35	P	N

1. CONNECTOR TYPE

38999/	MIL-DTL-38999 III

2. SHELL STYLE

20	Wall Mount Receptacle
21	Box Mount Receptacle Hermetic
26	Straight Plug
24	Jam Nut Receptacle
23	Jam Nut Receptacle Hermetic
25	Solder Mount Receptacle Hermetic
27	Weld Mounted Receptacle, **(Hermetic)** Only

3. SERVICE CLASS

Military	Finish	RoHS	Material	Material/ Description
C	Anodic Coating	■	Aluminum	200°C, 500 hour salt spray
F	Electroless Nickel	■	Aluminum	200°C, EMI shielding –65dB @ 10GHz, 48 hour salt spray
G	Electroless Nickel	■	Aluminum	200°C, Space grade, 48 hour salt spray
J	Olive Drab Cadmium		Composite	175°C, 2000 hours dynamic salt spray, EMI Shielding –50 dB@10 GHz specification min.
K	Passivated Stainless Steel	■	Stainless Steel	200°C, firewall capability, 500 hour salt spray resistance, EMI –45 dB @ 10 GHz specification min.
L	Stainless Steel w/ Nickel Plate	■	Stainless Steel	Corrosion resistant steel, 200°C, 500 hour salt spray, , non firewall, EMI shielding –65dB @ 10GHz specification min.
M	Electroless Nickel	■	Composite	200°C, EMI shielding –65dB @ 10GHz, 2000 hours dynamic salt spray
N	Stainless Steel w/ Nickel Plate	■	Stainless Steel	Hermetic connectors, corrosion resistant steel, 200°C
S	Stainless Steel w/ Nickel Plate	■	Stainless Steel	Non-hermetic connectors, corrosion resistant steel, 200°, firewall capability, 500 hour salt spray, EMI shielding –65dB @ 10GHz specification min.
T	Durmalon plated	■	Aluminum	Nickel-PTFE alternative to Cadmium, 175°C, 500 hour salt spray, EMI -50dB at 10GHz specification min.
W	Olive Drab Cadmium		Aluminum	175°C , 500 hour salt spray, EMI Shielding –50 dB@10 GHz specification min.
Y	Stainless Steel	■	Stainless Steel	Hermetic seal, 200°C passivated stainless steel
Z	Zinc-Nickel Plated	■	Aluminum	Zinc-Nickel Alternative to Cadmium, +175°C, 500 hour salt spray, EMI Shielding –50 dB @ 10 GHz specification min.

MIL-DTL-38999, Series III TV

How to Order (Military)

4. SELECT A SHELL SIZE & INSERT ARRANGEMENT SEE PAGES 2-5

Shell Size & Insert Arrangements are on pages 2-5. First number represents Shell Size, second number is the Insert Arrangement.

Triple Start Threads									
A	B	C	D	E	F	G	H	J	Mil Shell Size
9	11	13	15	17	19	21	23	25	Amphenol Shell size

5. CONTACT TYPE

P	500 Cycle Pin Contacts
S	500 Cycle Socket Contacts
H	1500 Pin Cycle Contacts
J	1500 Socket Cycle Contacts
A	Less Pin Contacts
B	Less Socket Contacts
X	Eyelet contacts, hermetics only

6. ALTERNATE KEY POSITION

Key/Keyway Position					
N	A	B	C	D	E

KEY/KEYWAY POSITION

A plug with a given rotation letter will mate with a receptacle with the same rotation letter. The angles for a given connector are the same whether it contains pins or sockets. Master key stays fixed, minor keys rotate. Inserts are not rotated in conjunction with the master key/keyway.

RECEPTACLE
(front face shown)

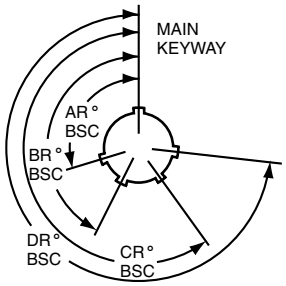

PLUG
(front face shown)

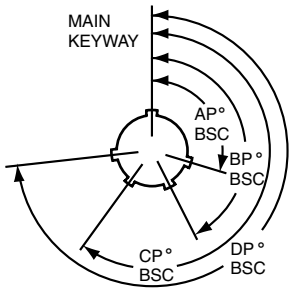

Shell Size	Key & Keyway Arrangement Identification Letter	AR° or AP° BSC	BR° or BP° BSC	CR° or CP° BSC	DR° or DP° BSC
A (9)	N*	105	140	215	265
	A	102	132	248	320
	B	80	118	230	312
	C	35	140	205	275
	D	64	155	234	304
	E	91	131	197	240
B (11) C (13) D (15)	N*	95	141	208	236
	A	113	156	182	292
	B	90	145	195	252
	C	53	156	220	255
	D	119	146	176	298
	E	51	141	184	242
E (17) F (19)	N*	80	142	196	293
	A	135	170	200	310
	B	49	169	200	244
	C	66	140	200	257
	D	62	145	180	280
	E	79	153	197	272
G (21) H (23) J (25)	N*	80	142	196	293
	A	135	170	200	310
	B	49	169	200	244
	C	66	140	200	257
	D	62	145	180	280
	E	79	153	197	272

MIL-DTL-38999, Series III TV

How to Order (Commercial)

PART NUMBER KEY

1. Type	2. Shell Style	3. Service Class	4. Shell Size & Insert Arrangement	5. Contact Type	6. Alternate Position	7. PCB Length if required
TV	00	RB	11-4	P	N	

		RATED 175°
1. TYPE	TV	Tri-Start-175°
	TVP	Panel Mounted Receptacle-175°
	PTV	Potted Version-175°

		RATED 200°
1. TYPE	TVS	Tri-Start-200°
	TVPS	Panel Mounted Receptacle
	PTVS	Potted Version-200°

		COMPOSITE 175°
1. TYPE	CTV	Composite Tri-Start-175°
	CTVP	Composite Back Panel Mounted -175° Receptacle

		COMPOSITE 200°
1. TYPE	CTVS	Composite Tri-Start-200°
	CTVPS	Composite Back Panel Mounted -200° Receptacle

		RECEPTACLE CRIMP
2. SHELL STYLE	02	Box Mount Recptacle Panel Mount
	00	Wall Mount Receptacle Panel Mount
	80	Wall Mount with Integral Banding Platform
	07	Jam Nut Receptacle
	87	Jam Nut with Integral Banding Plaform
	01	Inline Receptacle
	81	Line Mount with Integral Banding Platform
	96	Plug with Integral Banding Platform
	76	Plug with Integral Strain Relief

		PLUG
2. SHELL STYLE	06	Straight Plug
	09	Flange Mount Plug
	56	Straight Plug with Dualok

		RECEPTACLE WITH PCB CONTACTS
2. SHELL STYLE	02	PCB Box Mount Receptacle
	12	PCB Box Mount Receptacle Clinch Nuts
	13	PCB Box Mount Receptacle Metric Clinch Nuts
	00	PCB Wall Mount Receptacle
	10	PCB Wall Mount Receptacle Clinch Nuts
	11	PCB Wall Mount Receptacle Metric Clinch Nuts
	40	PCB Wall Mount Receptacle Double Flange
	07	PCB Jam Nut Receptacle
	47	PCB Jam Nut Receptacle Double Flange
	42	PCB Wall Mount with integrated helicoils

		RECEPTACLE HERMETIC (STAINLESS STEEL)
2. SHELL STYLE	02	Box Mount Receptacle Hermetic
	07	Jam Nut Receptacle Hermetic
	I	Solder Mount Receptacle Hermetic
	HI	Weld Mount Receptacle Hermetic

Wall Mount Receptacle (00, 20)

Line Receptacle (01)

Box Mount Receptacle (02, 21)

Straight Plug (06)

Lanyard Release Plug (29, 30, 31)

MIL-DTL-38999, Series III TV

How to Order (Commercial)

ALUMINUM 175ºC			
3. SERVICE CLASS	DT-	Durmalon: 500 hrs. salt spray, -50dB@10GHz	
	DZ-	Black Zinc: 500 hrs. salt spray, -50dB@10GHz	
	RW-	Olive Drab Cadmium-500 hrs. salt spray, -65dB@10GHz	
	RGW-	Olive Drab Cadmium (with Ground Plane)	
ALUMINUM 200ºC			
3. SERVICE CLASS	RF-	Electroless Nickel-48 hrs. salt spray, -65dB@10GHz	
	RGF-	Electroless Nickel (with ground plane)	
	RB-	Marine Bronze: 2,000 hr. salt spray, -65dB@10GHz	
	DS-	AP-93 Tri-Nickel Alloy, Aluminum, 1000 Hr., 200°C, -65dB@100Hz*	
COMPOSITE 175ºC			
3. SERVICE CLASS	RW-	Olive Drab Cadmium-500 hrs. salt spray, -65dB@10GHz	
	RGW-	Olive Drab Cadmium (with Ground Plane)	
COMPOSITE 200ºC			
3. SERVICE CLASS	RF-	Electroless Nickel-48 hrs. salt spray, -65dB@10GHz	
	RGF-	Electroless Nickel (with ground plane)	
STAINLESS STEEL 200ºC			
3. SERVICE CLASS	RK-	Paaivated (Firewall): 500 hrs. salt, -65dB@10GHz	
	RKN-	Passivated (Non-Firewall): 500 hrs. salt, -65dB@10GHz	
	RS-	Nickel Plated (Firewall): 500 hrs. salt, -65dB@10GHz	
	RL-	Nickel Plated (Non-Firewall): 500 hrs. salt, -50dB@10GHz	

4. SHELL SIZE & INSERT ARRANGEMENT	
PAGE 2-5	First number represents Shell Size, second number is the Insert Arrangement.

Insert arrangements using multi-axial (i.e. coax, twinax, triax shielded) contacts should not be used in firewall applications. *Coaxial arrangements are not available in firewall classes.

5. CONTACT TYPE	
P	500 Cycle Pin Contacts, if require Less Contacts place (LC) at the end of part number
S	500 Cycle Socket Contacts, if require Less Contacts place (LC) at the end of part number
H	1500 Cycle Pin Contacts
J	1500 Cycle Socket Contacts
X	Eyelet contacts, hermetics only

Jam Nut Receptacle (07, 24)

Flange Mounting Plug (09)

Deep Reach Receptacle
Consult Amphenol Aerospace

Solder Mount Hermetic Receptacle (I, 25)

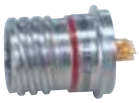

Amphenol Aerospace

How to Order (Alternate Keying) Commercial

PART NUMBER KEY

1. Type	2. Shell Style	3. Service Class	4. Shell Size & Insert Arrangement	5. Contact Type	6. Alternate Position	7. PCB Length if required
TV	00	RB	11-4	P	N	

6. ALTERNATE KEYING					
Shell Size	Key & Keyway Arrangement Identification Letter	AR° or AP° BSC	BR° or BP° BSC	CR° or CP° BSC	DR° or DP° BSC
9	N*	105	140	215	265
	A	102	132	248	320
	B	80	118	230	312
	C	35	140	205	275
	D	64	155	234	304
	E	91	131	197	240
11, 13, and 15	N*	95	141	208	236
	A	113	156	182	292
	B	90	145	195	252
	C	53	156	220	255
	D	119	146	176	298
	E	51	141	184	242
17 and 19	N*	80	142	196	293
	A	135	170	200	310
	B	49	169	200	244
	C	66	140	200	257
	D	62	145	180	280
	E	79	153	197	272
21, 23, and 25	N*	80	142	196	293
	A	135	170	200	310
	B	49	169	200	244
	C	66	140	200	257
	D	62	145	180	280
	E	79	153	197	272
25L, 33, and 37	N*	80	142	188	293
	A	135	170	188	310
	B	49	169	188	244
	C	66	140	188	257
	D	62	145	188	280
	E	79	153	188	272

** An "N" designation is used on D38999 military part number but not on the commercial versions*

KEY/KEYWAY POSITION

A plug with a given rotation letter will mate with a receptacle with the same rotation letter. The angles for a given connector are the same whether it contains pins or sockets. Master key stays fixed, minor keys rotate. Inserts are not rotated in conjunction with the master key/keyway.

RECEPTACLE (FRONT FACE SHOWN)

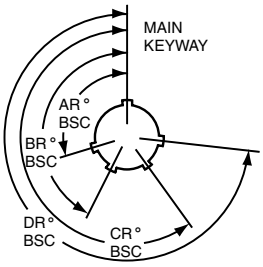

PLUG (FRONT FACE SHOWN)

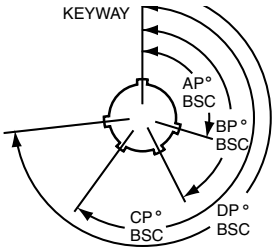

6. SELECT A ALTERNATE KEYING COMMERCIAL

Alignment Disc

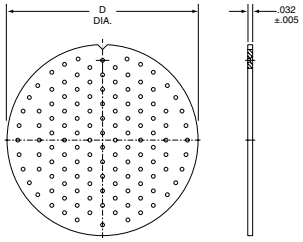

Shell Size	D Dia. ±.010
9	.234
11	.350
13	.500
15	.725
17	.750
19	.850
21	.953
23	1.147
25	1.250

7. PCB LENGTH FOR COMMERCIAL ONLY

** If Required

Contact Stickout	Pin Contacts	Pin Contacts with Alignment Disk
.150"	(P15)	(P15AD)
.250"	(P25)	(P25AD)
.350"	(P35)	(P35AD)

Contact Stickout	Socket Contacts	Socket Contacts with Alignment Disk
.150"	(S15)	(S15AD)
.250"	(S25)	(S25AD)
.350"	(S35)	(S35AD)

7. PCB LENGTH FOR HD38999 ONLY

9-9, 11-19, 13-32, 15-55, 17-73, 19-88, 21-121, 23-151, 25-187

PCB tail stickout +/-.040 inch	Without Alignment Disk		With Alignment Disc	
	Pins	Sockets	Pins	Sockets
.100" nominal	(P1*)	(S1)	(P1AD)	(S1AD)
.150" nominal	(P15*)	(S15)	(P15AD)	(S15AD)
.200" nominal	(P2)	(S2)	(P2AD)	(S2AD)
.250" nominal	(P25*)	(S25)	(P25AD)	(S25AD)
.300" nominal	(P3*)	(S3)	(P3AD)	(S3AD)
.350" nominal	(P35)	(S35)	(P35AD)	(S35AD)

Note: Standard tail diameter is 0.019±.001 Stick out is measured from the end of the connector shell to end of the contact

Boeing BACC63

How to Order

HOW TO ORDER - BOEING BACC63 CT & CU

1. Boeing Basic Number	2. Style	3. Shell Size	4. Shell Finish & Contact	5. Insert Arrangement	6. Contact Type	7. Alternate Keying Position	8. Ordering Option
BACC63	CT	15	–	19	P	N	H

COMPOSITE

1. BOEING NUMBER

BACC63	Boeing

2. STYLE

CT	Composite Plug
CU	Composite Receptacle

3. SHELL SIZE

15	Shell Size 9-25

4. SHELL FINISH & CONTACT

C	CT Style Only. Cadmium Plated, Grounded
D	Cadmium Plated, ungrounded
G	Nickel Plated, Grounded
–	Nickel Plated, Ungrounded

5. INSERT ARRANGEMENTS-
Consult Amphenol Aerospace for insert arrangements available.

6. CONTACT TYPE

P	Pin
S	Socket

7. ALTERNATE KEYING POSITION

N	Normal
A-E	Alternates

8. ORDERING OPTIONS

H	Without Contacts & Seal Plugs
Blank	With Contacts & Seal Plugs

HOW TO ORDER - BOEING BACC63 DB & DC

1. Boeing Basic Number	2. Style	3. Shell Size-Insert Arrangement	4. Contact Type	5. Alternate Keying Position	6. Ordering Option
BACC63	DB	15-19	P	N	H
BACC63	DC	17-8	P	N	H

STAINLESS STEEL

1. BOEING NUMBER

BACC63	Boeing

2. SELECT A STYLE

DB	Stainless Steel Plug
DC	Stainless Steel Receptacle

3. SELECT A SHELL SIZE & INSERT ARRANGEMENT SEE PAGES 2-5
Shell Size & Insert Arrangements are on pages 2-5. First number represents Shell Size, second number is the Insert Arrangement. Please include the dash.

4. CONTACT TYPE

P	Pin
S	Socket

5. ALTERNATE KEYING POSITION

N	Normal
A-E	Alternates

6. ORDERING OPTION

H	Without Contacts & Seal Plugs
Blank	With Contacts & Seal Plugs

Wall Mounting Receptacle

Military (D38999/20), Commercial (TVP00, TVPS00, CTVP00, CTVPS00)

PART NUMBER BUILDER Page 45-47
ONLINE CONFIGURATOR www.amphenol-aerospace.com

MILITARY
D38999/20

Commercial

ALUMINUM	COMPOSITE	STAINLESS STEEL
TVPS00RF	CTVPS00RF	TVPS00RK
TVP00RW	CTVP00RW	TVPS00RKN
TVP00DT	CTVP00RGF	TVPS00RS
TVP00DZ	CTVP00RGW	TVPS00RL
TVP00RGF		
TVP00RGW		
TVPS00RB		

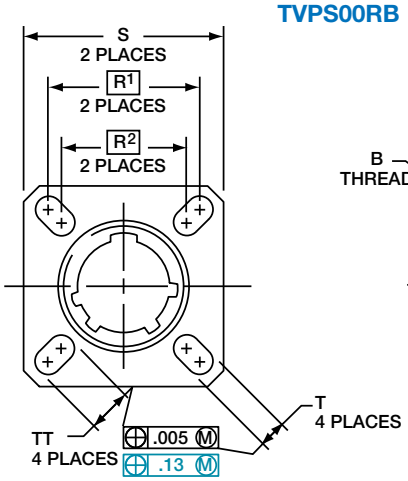

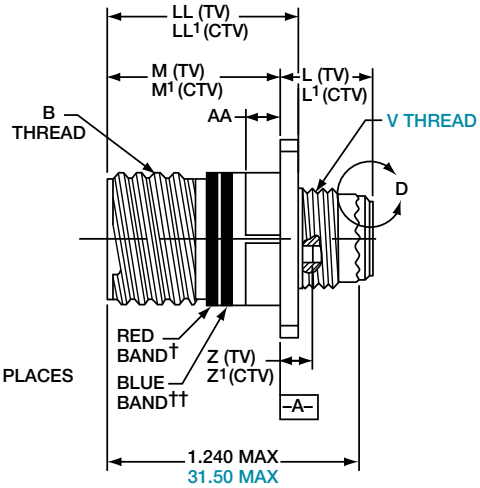

† Red band indicates fully mated
†† Blue band indicates rear release contact retention system

VIEW D
FOR SIZE 8 COAXIAL ONLY,
RELATIVE TO –A–

VIEW D
FOR SIZE 8 TWINAX ONLY,
RELATIVE TO –A–

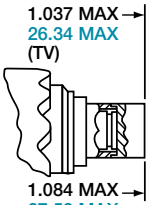

PANEL HOLE DIMENSIONS

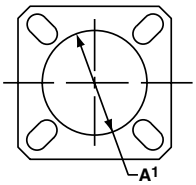

BACK PANEL MOUNTING

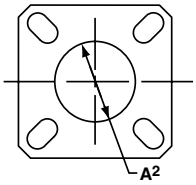

FRONT PANEL MOUNTING

Inches

Shell Size	MS Shell Size Code	B Thread Class 2A 0.1P=0.3L-TS (Plated)	L Max. (TV)	L1 Max. (CTV)	M +.000 –.005 (TV)	M1 +.000 –.005 (CTV)	R1	R2	S Max.	T ±.008	Z. Max. (TV)	Z1 Max. (CTV)	A1 Back Panel Mount	A2 Front Panel Mount	AA Max. Panel Thickness	LL +.006 –.000 (TV)	LL1 ±.005 (CTV)	TT ±.008
9	A	.6250	.469	.514	.820	.773	.719	.594	.948	.128	.153	.198	.655	.516	.234	.905	.908	.216
11	B	.7500	.469	.514	.820	.773	.812	.719	1.043	.128	.153	.198	.796	.625	.234	.905	.908	.194
13	C	.8750	.469	.514	.820	.773	.906	.812	1.137	.128	.153	.198	.922	.750	.234	.905	.908	.194
15	D	1.0000	.469	.514	.820	.773	.969	.906	1.232	.128	.153	.198	1.047	.906	.234	.905	.908	.173
17	E	1.1875	.469	.514	.820	.773	1.062	.969	1.323	.128	.153	.198	1.219	1.016	.234	.905	.908	.194
19	F	1.2500	.469	.514	.820	.773	1.156	1.062	1.449	.128	.153	.198	1.297	1.141	.234	.905	.908	.194
21	G	1.3750	.500	.545	.790	.741	1.250	1.156	1.575	.128	.183	.228	1.442	1.266	.204	.905	.904	.194
23	H	1.5000	.500	.545	.790	.741	1.375	1.250	1.701	.154	.183	.228	1.547	1.375	.204	.905	.904	.242
25	J	1.6250	.500	.545	.790	.741	1.500	1.375	1.823	.154	.183	.228	1.672	1.484	.204	.905	.904	.242

Millimeters

Shell Size	MS Shell Size Code	L Max. (TV)	L1 Max. (CTV)	M +.00 –.13 (TV)	M1 +.00 –.13 (CTV)	R1	R2	S Max.	T ±.20	V Thread Metric	Z. Max. (TV)	Z1 Max. (CTV)	A1 Back Panel Mount	A2 Front Panel Mount	AA Max.	LL +.15 –.00 (TV)	LL1 ±.13 (CTV)	TT ±.20
9	A	11.91	13.06	20.83	19.63	18.26	15.09	24.1	3.25	M12X1-6g	3.89	5.03	16.66	13.11	5.94	22.99	23.06	5.49
11	B	11.91	13.06	20.83	19.63	20.62	18.26	26.5	3.25	M15X1-6g	3.89	5.03	20.22	15.88	5.94	22.99	23.06	4.93
13	C	11.91	13.06	20.83	19.63	23.01	20.62	28.9	3.25	M18X1-6g	3.89	5.03	23.42	19.05	5.94	22.99	23.06	4.93
15	D	11.91	13.06	20.83	19.63	24.61	23.01	31.3	3.25	M22X1-6g	3.89	5.03	26.59	23.01	5.94	22.99	23.06	4.39
17	E	11.91	13.06	20.83	19.63	26.97	24.61	33.7	3.25	M25X1-6g	3.89	5.03	30.96	25.81	5.94	22.99	23.06	4.93
19	F	11.91	13.06	20.83	19.63	29.36	26.97	36.9	3.25	M28X1-6g	3.89	5.03	32.94	28.98	5.94	22.99	23.06	4.93
21	G	12.70	13.84	20.07	18.82	31.75	29.36	40.1	3.25	M31X1-6g	4.65	5.79	36.12	32.16	5.18	22.99	22.96	4.93
23	H	12.70	13.84	20.07	18.82	34.93	31.75	43.3	3.91	M34X1-6g	4.65	5.79	39.29	34.93	5.18	22.99	22.96	6.15
25	J	12.70	13.84	20.07	18.82	38.10	34.93	46.4	3.91	M37X1-6g	4.65	5.79	42.47	37.69	5.18	22.99	22.96	6.15

All dimensions for reference only

☐ Designates true position dimensioning

Box Mounting Receptacle

Commercial (TVP02, TVPS02, CTVP02, CTVPS02)

PART NUMBER BUILDER Page 45-47
ONLINE CONFIGURATOR www.amphenol-aerospace.com

Commercial

ALUMINUM	COMPOSITE	STAINLESS STEEL
TVPS02RF	CTVPS02RF	TVPS02RK
TVP02RW	CTVP02RW	TVPS02RKN
TVP02DT	CTVP02RGF	TVPS02RS
TVP02DZ	CTVP02RGW	TVPS02RL
TVP02RGF		
TVP02RGW		
TVPS02RB		

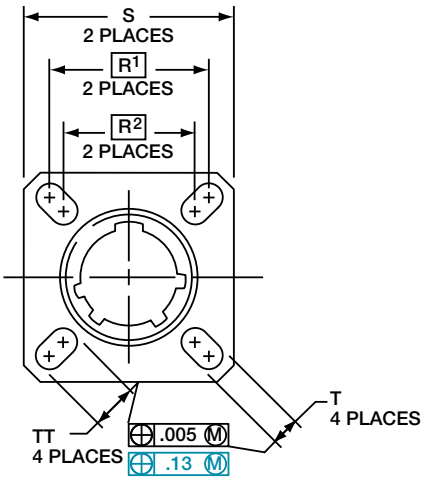

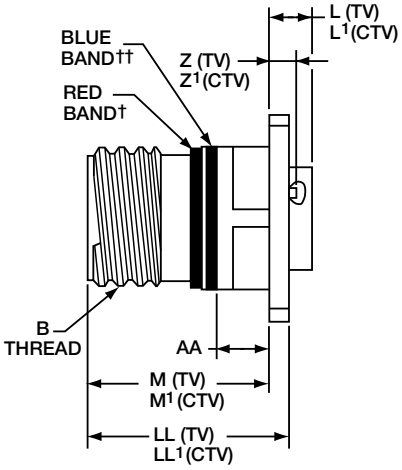

PANEL HOLE DIMENSIONS

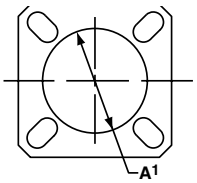

BACK PANEL MOUNTING

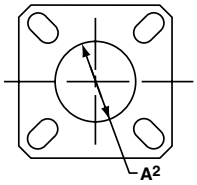

FRONT PANEL MOUNTING

† Red band indicates fully mated
†† Blue band indicates rear release contact retention system

Consult Amphenol Aerospace for availability of composite box mount receptacles.

Inches

Shell Size	MS Shell Size Code	B Thread Class 2A 0.1P=0.3L-TS (Plated)	L Max. (TV)	L1 Max. (CTV)	M +.000 –.005 (TV)	M1 +.000 –.005 (CTV)	R1	R2	S Max.	T ±.008	Z. Max. (TV)	Z1 Max. (CTV)	A1 Back Panel Mount	A2 Front Panel Mount	AA Max. Panel Thickness	LL +.006 –.000 (TV)	LL1 ±.005 (CTV)	TT ±.008
9	A	.6250	.205	.250	.820	.773	.719	.594	.948	.128	.153	.198	.650	.510	.234	.905	.908	.216
11	B	.7500	.205	.250	.820	.773	.812	.719	1.043	.128	.153	.198	.800	.620	.234	.905	.908	.194
13	C	.8750	.205	.250	.820	.773	.906	.812	1.137	.128	.153	.198	.910	.740	.234	.905	.908	.194
15	D	1.0000	.205	.250	.820	.773	.969	.906	1.232	.128	.153	.198	1.040	.900	.234	.905	.908	.173
17	E	1.1875	.205	.250	.820	.773	1.062	.969	1.323	.128	.153	.198	1.210	1.010	.234	.905	.908	.194
19	F	1.2500	.205	.250	.820	.773	1.156	1.062	1.449	.128	.153	.198	1.280	1.130	.234	.905	.908	.194
21	G	1.3750	.235	.280	.790	.741	1.250	1.156	1.575	.128	.183	.228	1.410	1.250	.204	.905	.904	.194
23	H	1.5000	.235	.280	.790	.741	1.375	1.250	1.701	.154	.183	.228	1.530	1.360	.204	.905	.904	.242
25	J	1.6250	.235	.280	.790	.741	1.500	1.375	1.823	.154	.183	.228	1.660	1.470	.204	.905	.904	.242

Millimeters

Shell Size	MS Shell Size Code	L Max. (TV)	L1 Max. (CTV)	M +.00 –.13 (TV)	M1 +.00 –.13 (CTV)	R1	R2	S Max.	T ±.20	Z. Max. (TV)	Z1 Max. (CTV)	A1 Back Panel Mount	A2 Front Panel Mount	AA Max.	LL +.15 –.00 (TV)	LL1 ±.13 (CTV)	TT ±.20
9	A	5.21	6.35	20.83	19.63	18.26	15.09	24.1	3.25	3.89	5.03	16.66	13.11	5.94	22.99	23.06	5.49
11	B	5.21	6.35	20.83	19.63	20.62	18.26	26.5	3.25	3.89	5.03	20.22	15.88	5.94	22.99	23.06	4.93
13	C	5.21	6.35	20.83	19.63	23.01	20.62	28.9	3.25	3.89	5.03	23.42	19.05	5.94	22.99	23.06	4.93
15	D	5.21	6.35	20.83	19.63	24.61	23.01	31.3	3.25	3.89	5.03	26.59	23.01	5.94	22.99	23.06	4.39
17	E	5.21	6.35	20.83	19.63	26.97	24.61	33.7	3.25	3.89	5.03	30.96	25.81	5.94	22.99	23.06	4.93
19	F	5.21	6.35	20.83	19.63	29.36	26.97	36.9	3.25	3.89	5.03	32.94	28.98	5.94	22.99	23.06	4.93
21	G	5.97	7.11	20.07	18.82	31.75	29.36	40.1	3.25	4.65	5.79	36.12	32.16	5.18	22.99	22.96	4.93
23	H	5.97	7.11	20.07	18.82	34.92	31.75	43.3	3.91	4.65	5.79	39.29	34.93	5.18	22.99	22.96	6.15
25	J	5.97	7.11	20.07	18.82	38.10	34.92	46.4	3.91	4.65	5.79	42.47	37.69	5.18	22.99	22.96	6.15

All dimensions for reference only

☐ Designates true position dimensioning

Line Receptacle

Commercial (TV01, TVS01, CTV01, CTVS01)

PART NUMBER BUILDER Page 45-47
ONLINE CONFIGURATOR www.amphenol-aerospace.com

Commercial

ALUMINUM	COMPOSITE	STAINLESS STEEL
TVS01RF	CTVS01RF	TVS01RK
TV01RW	CTV01RW	TVS01RKN
TV01DT	CTV01RGF	TVS01RS
TV01DZ	CTV01RGW	TVS01RL
TV01RGF		
TV01RGW		
TVS01RB		

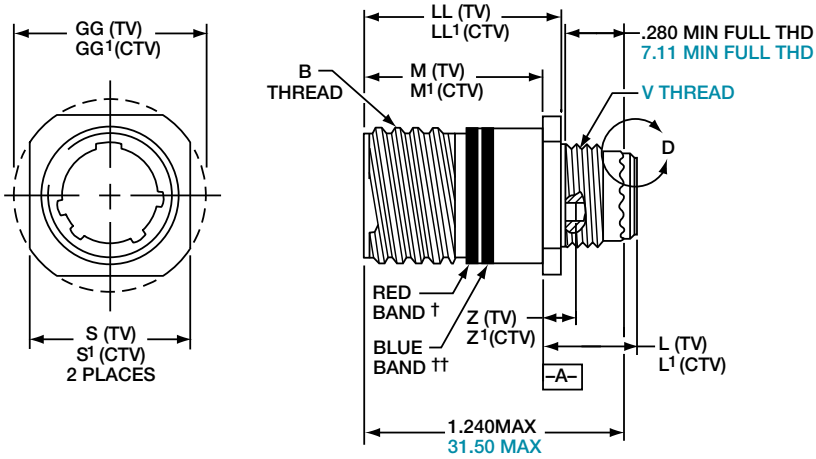

† Red band indicates fully mated
†† Blue band indicates rear release contact retention system

VIEW D
FOR SIZE 8 COAXIAL ONLY,
RELATIVE TO –A–

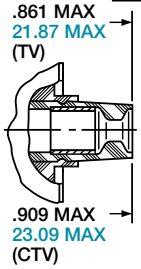

VIEW D
FOR SIZE 8 TWINAX ONLY,
RELATIVE TO –A–

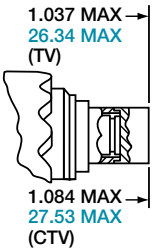

Inches

Shell Size	MS Shell Size Code	B Thread 0.1P-0.3L-TS-2A (Plated)	M +.000 –.005 (TV)	M1 +.000 –.005 (CTV)	L Max. (TV)	L1 Max. (CTV)	S ±.010 (TV)	S1 ±.010 (CTV)	Z Max (TV)	Z1 Max (CTV)	GG ±.010 (TV)	GG1 ±.010 (CTV)	LL +.006 –.000 (TV)	LL1 ±.005 (CTV)
9	A	.6250	.820	.773	.469	.514	.675	.635	.153	.198	.812	.699	.905	.908
11	B	.7500	.820	.773	.469	.514	.800	.765	.153	.198	.905	.875	.905	.908
13	C	.8750	.820	.773	.469	.514	.925	.885	.153	.198	1.093	1.007	.905	.908
15	D	1.0000	.820	.773	.469	.514	1.050	1.100	.153	.198	1.219	1.140	.905	.908
17	E	1.1875	.820	.773	.469	.514	1.238	1.197	.153	.198	1.375	1.229	.905	.908
19	F	1.2500	.820	.773	.469	.514	1.300	1.260	.153	.198	1.469	1.380	.905	.908
21	G	1.3750	.790	.741	.500	.545	1.425	1.385	.183	.228	1.625	1.493	.905	.904
23	H	1.5000	.790	.741	.500	.545	1.550	1.510	.183	.228	1.750	1.626	.905	.904
25	J	1.6250	.790	.741	.500	.545	1.675	1.635	.183	.228	1.875	1.777	.905	.904

Millimeters

Shell Size	MS Shell Size Code	M +.00–.013 (TV)	M1 +.00 –.13 (CTV)	L Max. (TV)	L1 Max. (CTV)	S ±.25 (TV)	S1 ±.010 (CTV)	V Thread Metric	Z Max (TV)	Z1 Max (CTV)	GG ±.25 (TV)	GG1 ±.25 (CTV)	LL +.15 –.00 (TV)	LL1 ±.13 (CTV)
9	A	20.83	19.63	11.91	13.06	17.15	16.13	M12X1-6g	3.89	5.03	20.62	17.75	22.99	23.06
11	B	20.83	19.63	11.91	13.06	20.32	19.43	M15X1-6g	3.89	5.03	22.99	22.22	22.99	23.06
13	C	20.83	19.63	11.91	13.06	23.50	22.47	M18X1-6g	3.89	5.03	27.76	25.57	22.99	23.06
15	D	20.83	19.63	11.91	13.06	26.67	27.94	M22X1-6g	3.89	5.03	30.96	28.95	22.99	23.06
17	E	20.83	19.63	11.91	13.06	31.45	30.40	M25X1-6g	3.89	5.03	34.93	31.21	22.99	23.06
19	F	20.83	19.63	11.91	13.06	33.02	32.00	M28X1-6g	3.89	5.03	37.31	35.05	22.99	23.06
21	G	20.07	18.82	12.70	13.84	36.20	35.18	M31X1-6g	4.65	5.79	41.28	37.92	22.99	22.96
23	H	20.07	18.82	12.70	13.84	39.37	38.35	M34X1-6g	4.65	5.79	44.45	41.30	22.99	22.96
25	J	20.07	18.82	12.70	13.84	42.55	41.53	M37X1-6g	4.65	5.79	47.63	45.13	22.99	22.96

All dimensions for reference only

Jam Nut Receptacle

Military (D38999/24), Commercial (TV07, TVS07, CTV07, CTVS07)

PART NUMBER BUILDER Page 45-47
ONLINE CONFIGURATOR www.amphenol-aerospace.com

MILITARY
D38999/24

Commercial

ALUMINUM	COMPOSITE	STAINLESS STEEL
TVS07RF	CTVS07RF	TVS07RK
TV07RW	CTV07RW	TVS07RKN
TV07DT	CTV07RGF	TVS07RS
TV07DZ	CTV07RGW	TVS07RL
TV07RGF		
TV07RGW		
TVS07RB		

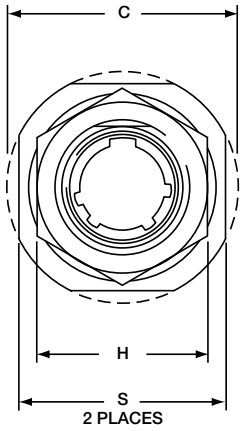

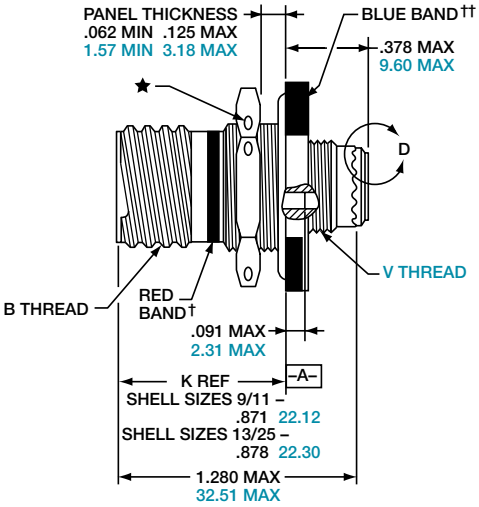

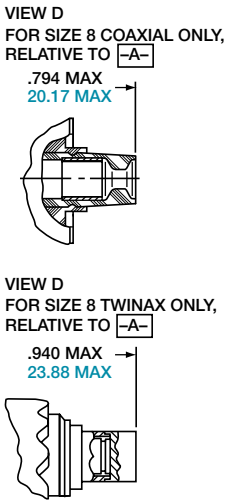

PANEL HOLE DIMENSIONS

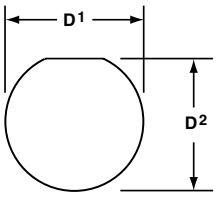

JAM NUT D-HOLE MOUNTING

† Red band indicates fully mated
†† Blue band indicates rear release contact retention system
★ .059 dia min.
1.5 dia min., 3 lockwire holes Formed lockwire hole design (6 holes) is optional

Inches

Shell Size	MS Shell Size Code	B Thread Class 2A 0.1P-0.3L-TS (Plated)	C Max.	D[1] +.010 –.000	D[2] +.000 –.010	H Hex +.017 –.016	S ±.010
9	A	.6250	1.199	.693	.657	.875	1.062
11	B	.7500	1.386	.825	.770	1.000	1.250
13	C	.8750	1.511	1.010	.955	1.188	1.375
15	D	1.0000	1.636	1.135	1.085	1.312	1.500
17	E	1.1875	1.761	1.260	1.210	1.438	1.625
19	F	1.2500	1.949	1.385	1.335	1.562	1.812
21	G	1.3750	2.073	1.510	1.460	1.688	1.938
23	H	1.5000	2.199	1.635	1.585	1.812	2.062
25	J	1.6250	2.323	1.760	1.710	2.000	2.188

Millimeters

Shell Size	MS Shell Size Code	C Max.	D[1] +.25 –.00	D[2] +.00 –.25	H Hex +.43 –.41	S ±.25	V Thread Metric
9	A	30.45	17.60	16.70	22.23	26.97	M12X1-6g
11	B	35.20	20.96	19.59	25.40	31.75	M15X1-6g
13	C	38.38	25.65	24.26	30.18	34.93	M18X1-6g
15	D	41.55	28.83	27.56	33.32	38.10	M22X1-6g
17	E	44.73	32.01	30.73	36.53	41.28	M25X1-6g
19	F	49.50	35.18	33.91	39.67	46.02	M28X1-6g
21	G	52.65	38.35	37.08	42.80	49.23	M31X1-6g
23	H	55.85	41.53	40.26	46.02	52.37	M34X1-6g
25	J	59.00	44.70	43.43	50.80	55.58	M37X1-6g

All dimensions for reference only NOTE: Deep reach receptacles are available for panel thicknesses up to .750 max.

Straight Plug

Military (D38999/26), Commercial (TV06, TVS06, CTV06, CTVS06)

Amphenol Aerospace

PART NUMBER BUILDER Page 45-47
ONLINE CONFIGURATOR www.amphenol-aerospace.com

MILITARY
D38999/26

Commercial

ALUMINUM	COMPOSITE	STAINLESS STEEL
TVS06RF	CTVS06RF	TVS06RK
TV06RW	CTV06RW	TVS06RKN
TV06DT	CTV06RGF	TVS06RS
TV06DZ	CTV06RGW	TVS06RL
TV06RGF		
TV06RGW		
TVS06RB		

METAL

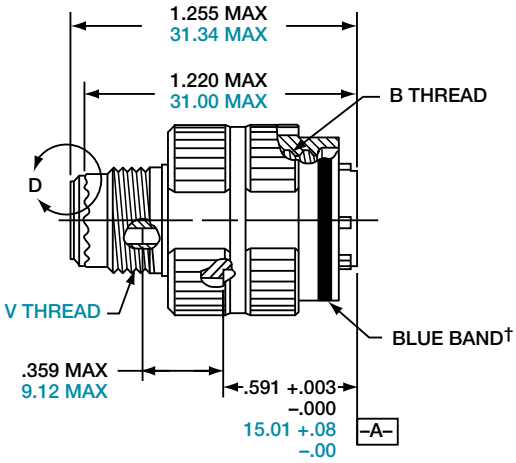

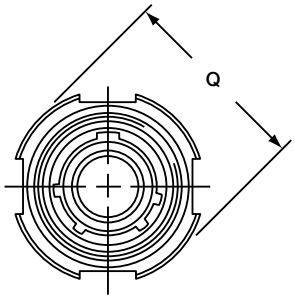

VIEW D
FOR SIZE 8 COAXIAL ONLY,
RELATIVE TO –A–

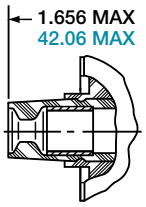

COMPOSITE

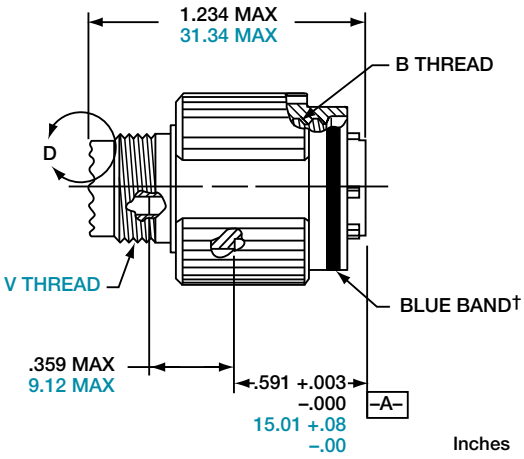

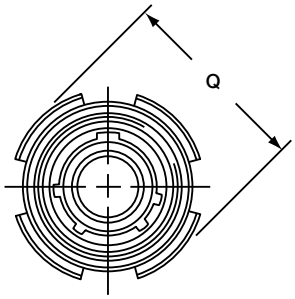

VIEW D
FOR SIZE 8 TWINAX ONLY,
RELATIVE TO –A–

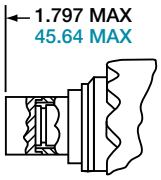

† Blue band indicates rear release contact retention system

Inches

Shell Size	MS Shell Size Code	B Thread 0.1P-0.3L-TS-2B (Plated)	Q Dia. Max.
9	A	.6250	.858
11	B	.7500	.984
13	C	.8750	1.157
15	D	1.0000	1.280
17	E	1.1875	1.406
19	F	1.2500	1.516
21	G	1.3750	1.642
23	H	1.5000	1.768
25	J	1.6250	1.890

Millimeters

Shell Size	MS Shell Size Code	Q Max.	V Thread Metric
9	A	21.8	M12X1-6g
11	B	25.0	M15X1-6g
13	C	29.4	M18X1-6g
15	D	32.5	M22X1-6g
17	E	35.7	M25X1-6g
19	F	38.5	M28X1-6g
21	G	41.7	M31X1-6g
23	H	44.9	M34X1-6g
25	J	48.0	M37X1-6g

All dimensions for reference only.

Flange Mounting Plug

Commercial (TV09, TVS09, CTV09, CTVPS09)

PART NUMBER BUILDER Page 45-47
ONLINE CONFIGURATOR www.amphenol-aerospace.com

Commercial

ALUMINUM	COMPOSITE	STAINLESS STEEL
TVS09RF	CTVPS09RF	TVS09RK
TV09RW	CTV09RW	TVS09RKN
TV09DT	CTV09RGF	TVS09RS
TV09DZ	CTV09RGW	TVS09RL
TV09RGF		
TV09RGW		
TVS09RB		

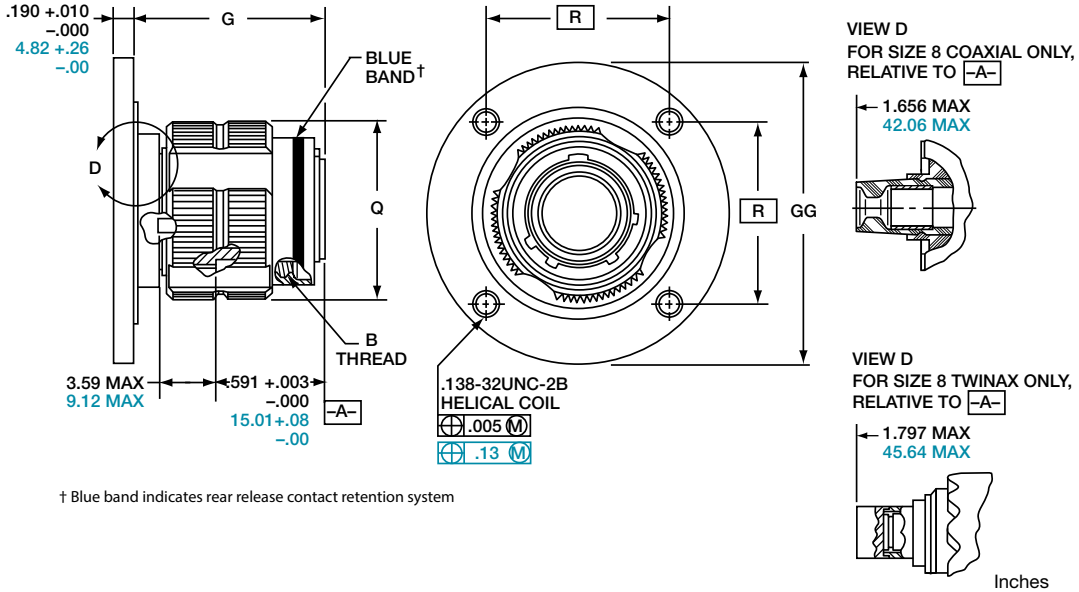

† Blue band indicates rear release contact retention system

Inches

Shell Size	MS Shell Size Coded	B Thread 0.1P-0.3L-TS-2A (Plated)	G ±.060	Q Dia. Max	R	GG Dia ±.005
9**	A	.6250	1.106	.859	1.038	1.838
11	B	.7500	1.106	.969	1.115	1.948
13**	C	.8750	1.106	1.141	1.240	2.124
15	D	1.0000	1.106	1.266	1.327	2.248
17	E	1.1875	1.106	1.391	1.417	2.375
19	F	1.2500	1.356	1.500	1.557	2.495
21	G	1.3750	1.356	1.625	1.624	2.568
23	H	1.5000	1.356	1.750	1.713	2.723
25	J	1.6250	1.356	1.875	1.801	2.848

Millimeters

Shell Size	MS Shell Size Coded	G ±.1.52	Q Dia. Max	R	GG Dia ±.13
9**	A	28.09	21.82	26.37	46.69
11	B	28.09	24.62	28.32	49.48
13**	C	28.09	28.98	31.50	53.95
15	D	28.09	32.16	33.71	57.10
17	E	28.09	35.33	35.99	60.33
19	F	34.44	38.10	39.55	63.37
21	G	34.44	41.28	41.25	65.23
23	H	34.44	44.45	43.51	69.16
25	J	34.44	47.63	45.75	72.34

All dimensions for reference only
** Partially tooled. Consult Amphenol Aerospace for availability

☐ Designates true position dimensioning

Commercial Plug (TV56, TVS56, CTV56, CTVS56)

PART NUMBER BUILDER Page 45-47
ONLINE CONFIGURATOR www.amphenol-aerospace.com

Commercial

ALUMINUM	COMPOSITE	STAINLESS STEEL
TVS56RF	CTVS56RF	TVS56RK
TV56RW	CTV56RW	TVS56RKN
TV56DT	CTV56RGF	TVS56RS
TV56DZ	CTV56RGW	TVS56RL
TV56RGF		
TV56RGW		
TVS56RB		

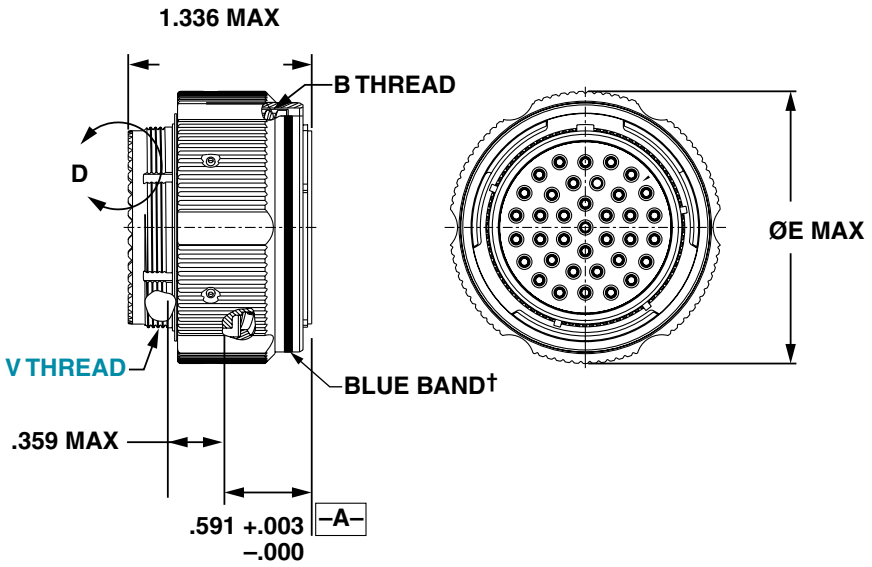

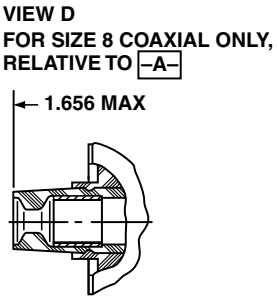

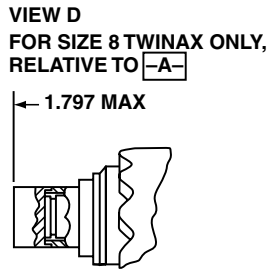

Shell Size	B Thread 0.1-0.3L-TS-2B (Plated)	E Dia. Max.	Q Dia. Max. Metric	V Thread Metric.
9	.6250	.953	24.2	M12X1-6g
11	.7500	1.053	26.7	M15X1-6g
13	.8750	1.252	31.8	M18X1-6g
15	1.0000	1.365	34.6	M22X1-6g
19	1.2500	1.605	40.7	M28X1-6g
21	1.3750	1.735	44.0	M31X1-6g
25	1.6250	1.975	50.1	M37X1-6g

RotoLok High Vibration Plug Solutions

Add the (474) suffix to the end of TV06 or TVS06 Part Number

Amphenol extends its high vibration family of products with the RotoLok plugs. These plugs have been tried and tested for years in the field and remain a trusted product for high vibration requirements in the most demanding of environments.

Please refer to page 33 How-to-order. Add suffix (474) to modification code to order RotoLok high vibration plug

TV06 - add suffix (474)
TVS06 - add suffix (474)

- All Aluminum shell sizes available in most finishes
- Intermateable with any MIL-DTL-38999 Series III receptacle and accessory
- Improves electrical performance by minimizing contact fretting
- EMI/RFI shielding advantages of D38999 Series III plugs

Wing Nut Plug

Add the (734) suffix to the end of TV06 or TVS06 Part Number

TV06 - add suffix (734)
TVS06 - add suffix (734)

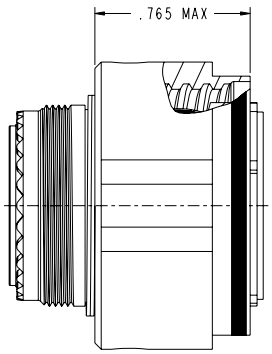

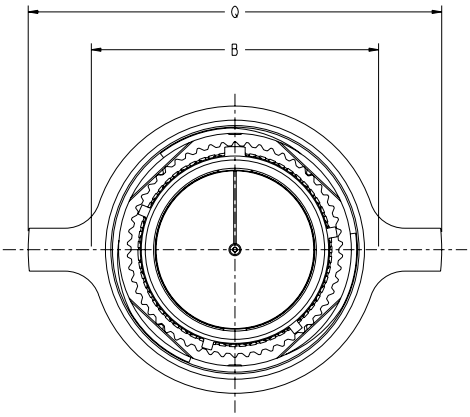

Shell Size	B Thread 0.1P-0.3L-YS (Plated)	B Dia Max.	B Dia. Max.	Q Dia. Max.
9	.6250	.830	.830	1.485
11	.7500	.935	.935	1.598
13	.8750	1.106	1.106	1.772
15	1.0000	1.234	1.234	1.898
17	1.1875	1.371	1.371	2.024
19	1.2500	1.478	1.478	2.134
21	1.3750	1.605	1.605	2.256
23	1.5000	1.722	1.722	2.382
25	1.6250	1.849	1.849	2.677

PCB Wall Mounting Receptacle (Back Panel Mounting)

Commercial (TVP00 & TVPS00)

PART NUMBER BUILDER Page 45-47
ONLINE CONFIGURATOR www.amphenol-aerospace.com

Commercial

ALUMINUM	STAINLESS STEEL
TVPS00RF	TVPS00RK
TVP00RW	TVPS00RKN
TVP00DT	TVPS00RS
TVP00DZ	TVPS00RL
TVPS00RB	

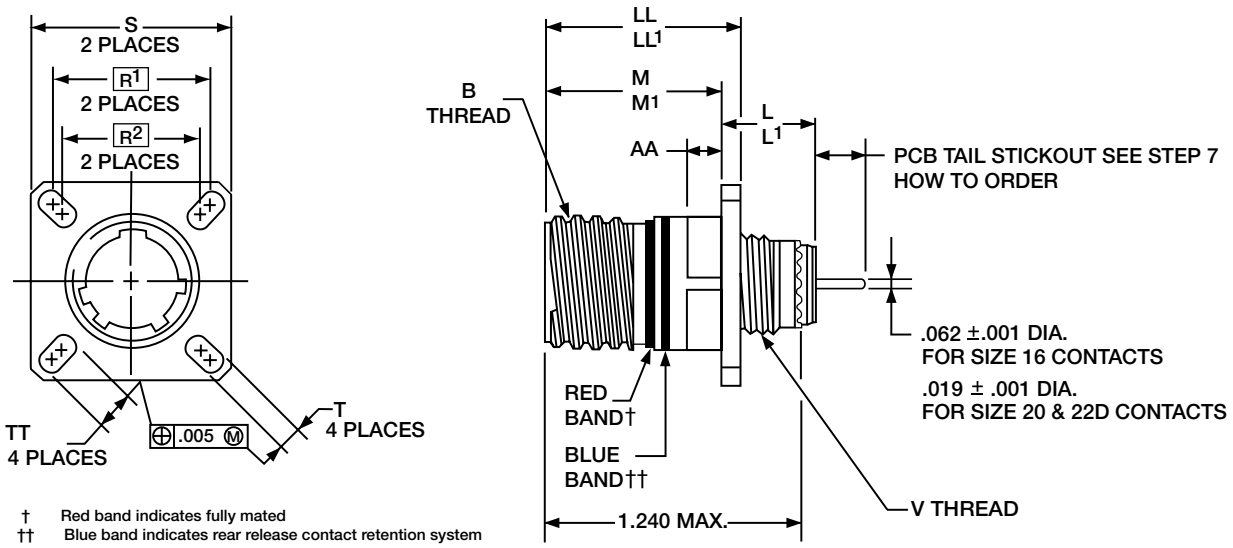

† Red band indicates fully mated
†† Blue band indicates rear release contact retention system

Shell Size	B Thread Class 2A (Plated) 0.1P-0.3L-TS	L Max. (TV)	L¹ Max. (CTV)	M +.000 −.005 (TV)	M¹ +.000 −.005 (CTV)	R1	R2	S Max.	T +.008 −.006	V Thread Metric	AA Max. Panel Thickness	LL +.006 −.000 (TV)	LL¹ ±.005 (CTV)	TT +.008 −.006
9	.6250	.469	.514	.820	.773	.719	.594	.948	.128	M12X1-6g	.234	.905	.908	.216
11	.7500	.469	.514	.820	.773	.812	.719	1.043	.128	M15X1-6g	.234	.905	.908	.194
13	.8750	.469	.514	.820	.773	.906	.812	1.137	.128	M18X1-6g	.234	.905	.908	.194
15	1.0000	.469	.514	.820	.773	.969	.906	1.232	.128	M22X1-6g	.234	.905	.908	.173
17	1.1875	.469	.514	.820	.773	1.062	.969	1.323	.128	M25X1-6g	.234	.905	.908	.194
19	1.2500	.469	.514	.820	.773	1.156	1.062	1.449	.128	M28X1-6g	.234	.905	.908	.194
21	1.3750	.500	.545	.790	.741	1.250	1.156	1.575	.128	M31X1-6g	.204	.905	.904	.194
23	1.5000	.500	.545	.790	.741	1.375	1.250	1.701	.154	M34X1-6g	.204	.905	.904	.242
25	1.6250	.500	.545	.790	.741	1.500	1.375	1.823	.154	M37X1-6g	.204	.905	.904	.242

All dimensions for reference only.
Most common options are shown; other options are available.

☐ Designates true position dimensioning

PCB Wall Mounting Receptacle (Back Panel Mounting) (With Clinch Nuts)

Commercial (TVP10 & TVPS10)

PART NUMBER BUILDER Page 45-47
ONLINE CONFIGURATOR www.amphenol-aerospace.com

Commercial

ALUMINUM	STAINLESS STEEL	COMPOSITE
TVPS10RF	TVPS10RK	CTVPS10RF
TVP10RW	TVPS10RKN	CTVP10RW
TVP10DT	TVPS10RS	
TVP10DZ	TVPS10RL	
TVPS10RB		

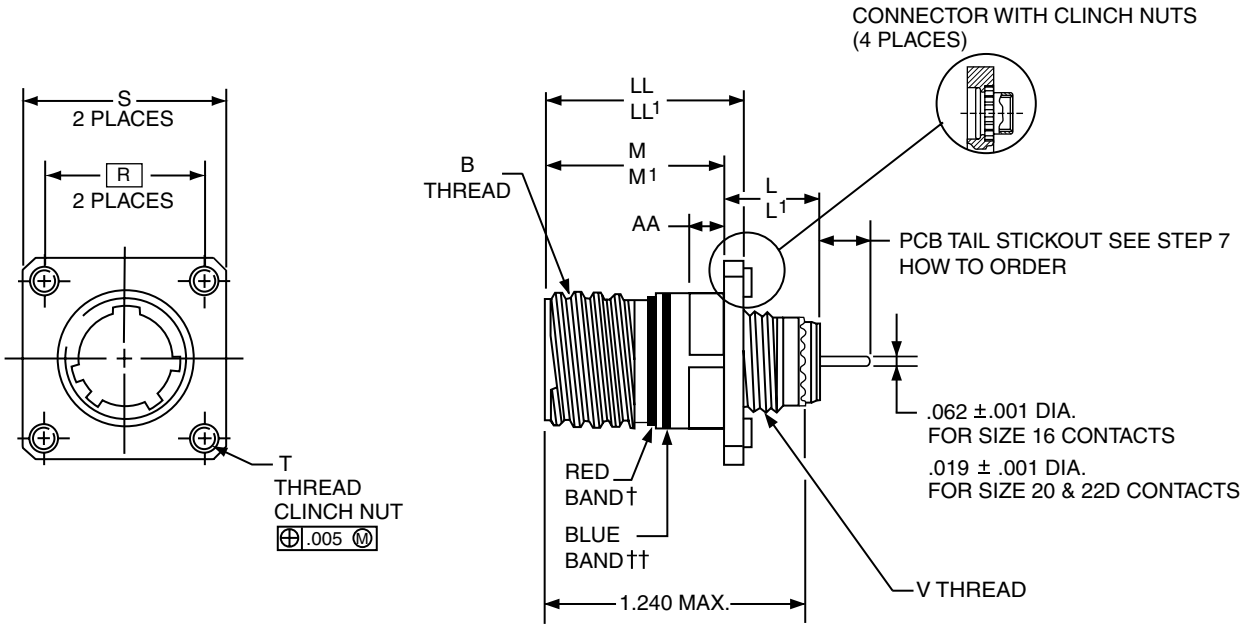

Shell Size	B Thread Class 2A (Plated) 0.1P-0.3L-TS	L Max. (TV)	L[1] Max. (CTV)	M +.000 –.005 (TV)	M[1] +.000 –.005 (CTV)	R	S Max.	T Thread	V Thread Metric	AA Max. Panel Thickness	LL +.006 –.000 (TV)	LL[1] ±.005 (CTV)
9	.6250	.469	.514	.820	.773	.719	1.094	.112-40UNC-3B	M12X1-6g	.234	.905	.908
11	.7500	.469	.514	.820	.773	.812	1.187	.112-40UNC-3B	M15X1-6g	.234	.905	.908
13	.8750	.469	.514	.820	.773	.906	1.281	.112-40UNC-3B	M18X1-6g	.234	.905	.908
15	1.0000	.469	.514	.820	.773	.969	1.344	.112-40UNC-3B	M22X1-6g	.234	.905	.908
17	1.1875	.469	.514	.820	.773	1.062	1.437	.112-40UNC-3B	M25X1-6g	.234	.905	.908
19	1.2500	.469	.514	.820	.773	1.156	1.531	.112-40UNC-3B	M28X1-6g	.234	.905	.908
21	1.3750	.500	.545	.790	.741	1.250	1.625	.112-40UNC-3B	M31X1-6g	.204	.905	.904
23	1.5000	.500	.545	.790	.741	1.375	1.750	.138-32UNC-3B	M34X1-6g	.204	.905	.904
25	1.6250	.500	.545	.790	.741	1.500	1.875	.138-32UNC-3B	M37X1-6g	.204	.905	.904

All dimensions for reference only.
Consult Amphenol for more information on ordering connectors with clinch nuts.
Most common options are shown; other options are available.

☐ Designates true position dimensioning
† Red band indicates fully mated
†† Blue band indicates rear release contact retention system

PCB Wall Mounting Double Flange Receptacle

Commercial (TVP40 & TVPS40)

PART NUMBER BUILDER Page 45-47
ONLINE CONFIGURATOR www.amphenol-aerospace.com

Commercial

ALUMINUM	STAINLESS STEEL	COMPOSITE
TVPS40RF	TVPS40RK	CTVPS40RF
TVP40RW	TVPS40RKN	CTVP40RW
TVP40DT	TVPS40RS	
TVP40DZ	TVPS40RL	
TVPS40RB		

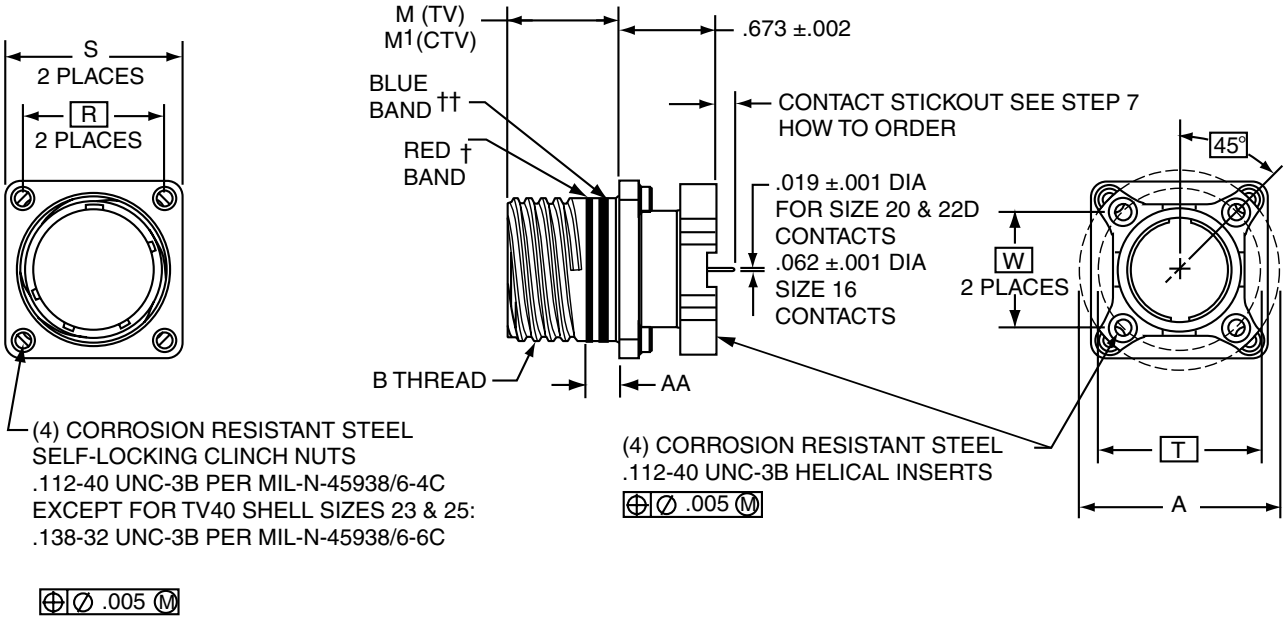

⊕ ∅ .005 Ⓜ

Shell Size	MS Shell Size Code (For Ref.)	A Dia. ±.005 (TV)	A Dia. ±.005 (CTV)	B Thread Class 2A (Plated) 0.1P-0.3L-TS	M +.000 –.005	M¹ ±.003 (CTV)	R (Panel Mount) (CTV)	R (Panel Mount (TV)	S Max. (TV)	S Max. (CTV)	AA Max. Panel Thickness	PCB Mounting Dimensions	
												T Dia. (TV) TP	W (CTV) TP
9	A	NA	1.016	.6250	.820	.770	.719	N/A	1.134	.949	.234	NA	.532
11	B	1.062	1.148	.7500	.820	.770	.812	.766	1.227	1.042	.234	. .850	.601
13	C	1.250	1.250	.8750	.820	.770	.906	.859	1.321	1.136	.234	.994	.703
15	D	1.375	1.375	1.0000	.820	.770	.969	.938	1.381	1.230	.234	1.119	.791
17	E	1.500	1.500	1.1875	.820	.770	1.062	1.016	1.477	1.323	.234	1.237	.875
19	F	1.625	1.625	1.2500	.820	.770	1.156	1.110	1.598	1.449	.234	1.379	.975
21	G	1.750	1.750	1.3750	.820	.738	1.250	1.206	1.724	1.573	.204	1.489	1.053
23	H	1.875	1.875	1.5000	.820	.738	1.375	1.312	1.850	1.699	.204	1.619	1.195
25	J	2.000	2.000	1.6250	.820	.738	1.500	1.438	1.972	1.823	.204	1.744	1.233

All dimensions for reference only.

† Red band indicates fully mated
†† Blue band indicates rear release contact retention system

PCB Box Mounting Receptacle

Commercial (TVP02 & TVPS02)

PART NUMBER BUILDER Page 45-47
ONLINE CONFIGURATOR www.amphenol-aerospace.com

Commercial

ALUMINUM	STAINLESS STEEL	COMPOSITE
TVPS02RF	TVPS02RK	CTVPS02RF
TVP02RW	TVPS02RKN	CTVP02RW
TVP02DT	TVPS02RS	
TVP02DZ	TVPS02RL	
TVPS02RB		

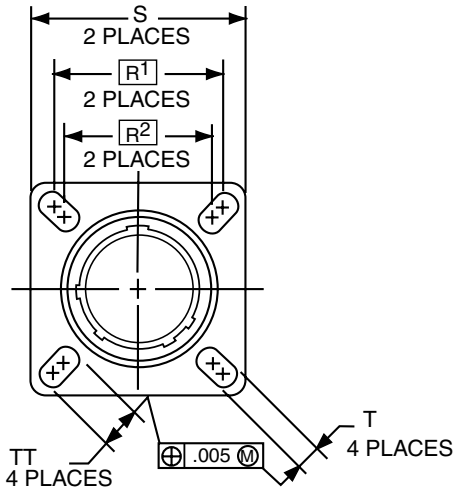

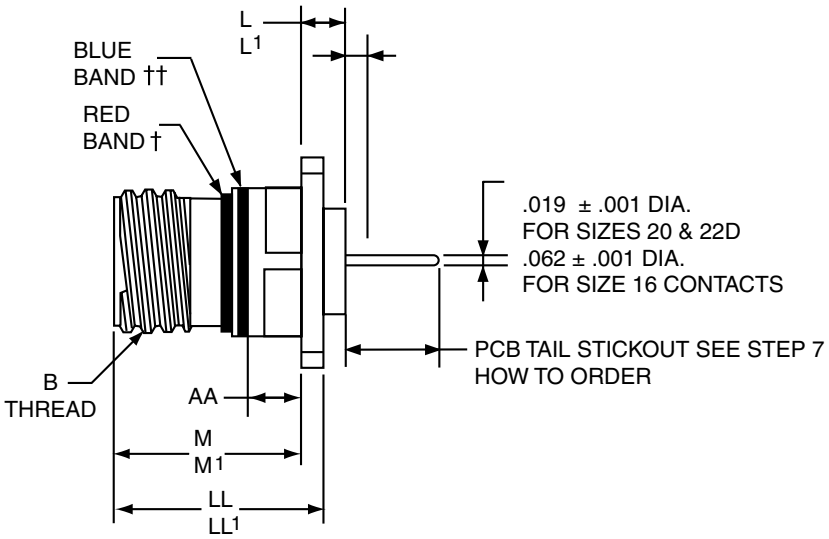

Shell Size	B Thread Class 2A (Plated) 0.1P-0.3L-TS	L Max. (TV)	L¹ Max. (CTV)	M +.000 −.005 (TV)	M¹ +.000 −.005 (CTV)	R1	R2	S Max.	T +.008 −.006	AA Max. Panel Thickness	LL +.006 −.000 (TV)	LL¹ ±.005 (CTV)	TT ±.008
9	.6250	.205	.250	.820	.773	.719	.594	.948	.128	.234	.905	.908	.216
11	.7500	.205	.250	.820	.773	.812	.719	1.043	.128	.234	.905	.908	.194
13	.8750	.205	.250	.820	.773	.906	.812	1.137	.128	.234	.905	.908	.194
15	1.0000	.205	.250	.820	.773	.969	.906	1.232	.128	.234	.905	.908	.173
17	1.1875	.205	.250	.820	.773	1.062	.969	1.323	.128	.234	.905	.908	.194
19	1.2500	.205	.250	.820	.773	1.156	1.062	1.449	.128	.234	.905	.908	.194
21	1.3750	.235	.280	.790	.741	1.250	1.156	1.575	.128	.204	.905	.904	.194
23	1.5000	.235	.280	.790	.741	1.375	1.250	1.701	.154	.204	.905	.904	.242
25	1.6250	.235	.280	.790	.741	1.500	1.375	1.823	.154	.204	.905	.904	.242

All dimensions for reference only.
Most common options are shown; other options are available.

□ Designates true position dimensioning
† Red band indicates fully mated
†† Blue band indicates rear release contact retention system

PCB Box Mounting Receptacle (With Clinch Nuts)

Commercial (TVP12 & TVPS12)

Amphenol Aerospace

PART NUMBER BUILDER Page 45-47
ONLINE CONFIGURATOR www.amphenol-aerospace.com

Commercial

ALUMINUM	STAINLESS STEEL	COMPOSITE
TVPS12RF	TVPS12RK	CTVPS12RF
TVP12RW	TVPS12RKN	CTVP12RW
TVP12DT	TVPS12RS	
TVP12DZ	TVPS12RL	
TVPS12RB		

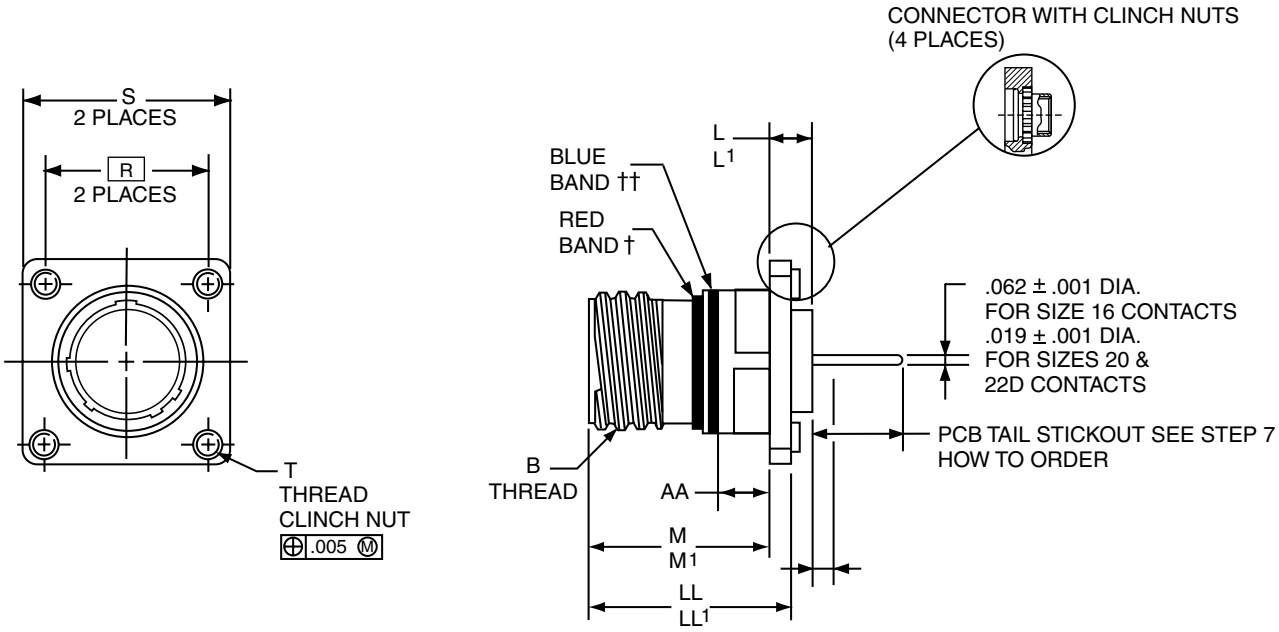

Shell Size	B Thread Class 2A (Plated) 0.1P-0.3L-TS	L Max. (TV)	L¹ Max. (CTV)	M +.000 –.005 (TV)	M¹ +.000 –.005 (CTV)	R	S Max.	T Thread	AA Max. Panel Thickness	LL +.006 –.000 (TV)	LL¹ +.006 –.000 (CTV)
9	.6250	.205	.250	.820	.773	.719	1.041	.112-40UNC-3B	.234	.905	.908
11	.7500	.205	.250	.820	.773	.812	1.135	.112-40UNC-3B	.234	.905	.908
13	.8750	.205	.250	.820	.773	.906	1.228	.112-40UNC-3B	.234	.905	.908
15	1.0000	.205	.250	.820	.773	.969	1.291	.112-40UNC-3B	.234	.905	.908
17	1.1875	.205	.250	.820	.773	1.062	1.385	.112-40UNC-3B	.234	.905	.908
19	1.2500	.205	.250	.820	.773	1.156	1.479	.112-40UNC-3B	.234	.905	.908
21	1.3750	.235	.280	.790	.741	1.250	1.573	.112-40UNC-3B	.204	.905	.904
23	1.5000	.235	.280	.790	.741	1.375	1.760	.112-40UNC-3B	.204	.905	.904
25	1.6250	.235	.280	.790	.741	1.500	1.885	.112-40UNC-3B	.204	.905	.904

All dimensions for reference only.
Most common options are shown; other options are available.

☐ Designates true position dimensioning
† Red band indicates fully mated
†† Blue band indicates rear release contact retention system

A

PCB Jam Nut Receptacle

Commercial (TV07 & TVS07)

PART NUMBER BUILDER Page 45-47
ONLINE CONFIGURATOR www.amphenol-aerospace.com

Commercial

ALUMINUM	STAINLESS STEEL	COMPOSITE
TVS07RF	TVS07RK	CTVS07RF
TV07RW	TVS07RKN	CTV07RW
TV07DT	TVS07RS	
TV07DZ	TVS07RL	
TVS07RB		

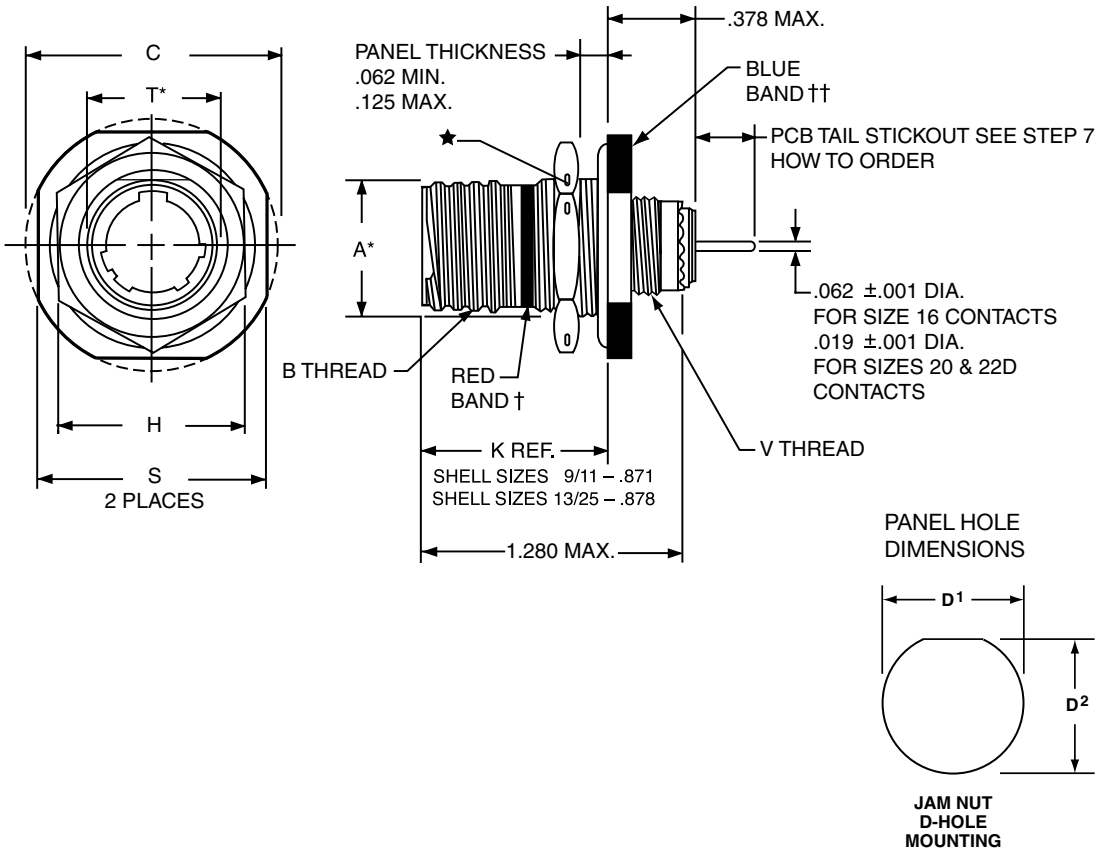

Shell Size	A* +.000 −.010	B Thread Class 2A (Plated) 0.1P-0.3L-TS	C Max.	D1 +.010 −.000	D2 +.010 −.000	H Hex +.017 −.016	S ±.010	T +.010 −.000	V Thread Metric
9	.669	.6250	1.199	.700	.670	.875	1.062	.697	M12X1-6g
11	.769	.7500	1.386	.825	.770	1.000	1.250	.822	M15X1-6g
13	.955	.8750	1.511	1.010	.955	1.188	1.375	1.007	M18X1-6g
15	1.084	1.0000	1.636	1.135	1.085	1.312	1.500	1.134	M22X1-6g
17	1.208	1.1875	1.761	1.260	1.210	1.438	1.625	1.259	M25X1-6g
19	1.333	1.2500	1.949	1.385	1.335	1.562	1.812	1.384	M28X1-6g
21	1.459	1.3750	2.073	1.510	1.460	1.688	1.938	1.507	M31X1-6g
23	1.575	1.5000	2.199	1.635	1.585	1.812	2.062	1.634	M34X1-6g
25	1.709	1.6250	2.323	1.760	1.710	2.000	2.188	1.759	M37X1-6g

All dimensions for reference only.
Most common options are shown; other options are available.

† Red band indicates fully mated
†† Blue band indicates rear release contact retention system
★ .059 dia. min. 3 lockwire holes. Formed lockwire hole design (6 holes) is optional.*"D" shaped mounting hole dimensions

PCB Jam Nut, Double Flange Receptacles

Commercial (TVP47 & TVPS47)

Amphenol Aerospace

PART NUMBER BUILDER Page 45-47
ONLINE CONFIGURATOR www.amphenol-aerospace.com

Commercial

ALUMINUM	STAINLESS STEEL	COMPOSITE
TVPS47RF	TVPS47RK	CTVPS47RF
TVP47RW	TVPS47RKN	CTVP47RW
TVP47DT	TVPS47RS	
TVP47DZ	TVPS47RL	

PANEL HOLE DIMENSIONS

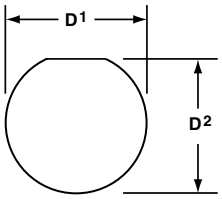

JAM NUT D-HOLE MOUNTING

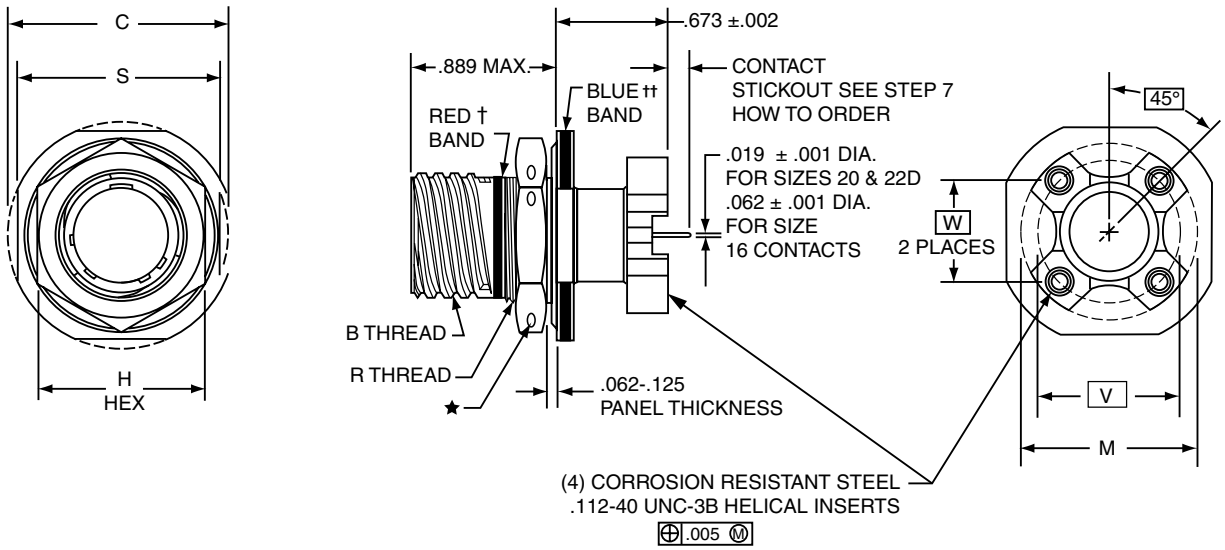

Shell Size	MS Shell Size Code (For Ref.)	B Thread Class 2A 0.1P-0.3L-TS (Plated)	C ±.005 (Jam Nut Flange Dia.	D1 +.010 –.000	D2 +.000 –.010	H Hex +.017 –.016	M Dia. ±.005 (TV)	M Dia. ±.005 (CTV)	R Thread Metric (Plated)	S +.011 –.010	PCB Mounting Dimensions V Dia. (TV) TP	PCB Mounting Dimensions W (CTV) TP
9	A	.6250	1.188	.700	.670	.875	1.062	1.016	M17X1-6g0.100R	1.062	.753	.532
11	B	.7500	1.375	.825	.770	1.000	1.062	1.148	M20X1-6g0.100R	1.250	.850	.601
13	C	.8750	1.500	1.010	.955	1.188	1.250	1.250	M25X1-6g0.100R	1.375	.994	.703
15	D	1.0000	1.625	1.135	1.085	1.312	1.375	1.375	M28X1-6g0.100R	1.500	1.119	.791
17	E	1.1875	1.750	1.260	1.210	1.438	1.500	1.500	M32X1-6g0.100R	1.625	1.237	.875
19	F	1.2500	1.937	1.385	1.335	1.562	1.625	1.625	M35X1-6g0.100R	1.812	1.379	.975
21	G	1.3750	2.062	1.510	1.460	1.688	1.750	1.750	M38X1-6g0.100R	1.937	1.489	1.053
23	H	1.5000	2.188	1.635	1.585	1.812	1.875	1.875	M41X1-6g0.100R	2.062	1.644	1.145
25	J	1.6250	2.312	1.760	1.710	2.000	2.000	2.000	M44X1-6g0.100R	2.188	1.744	1.233

All dimensions for reference only.
† Red band indicates fully mated
†† Blue band indicates rear release contact retention system.

★ .059 dia. min. (1.5 dia. min.) 3 lockwire holes.
Formed lockwire hole design (6 holes) is optional.

PCB Hermetic Box Mounting Receptacle

Commercial

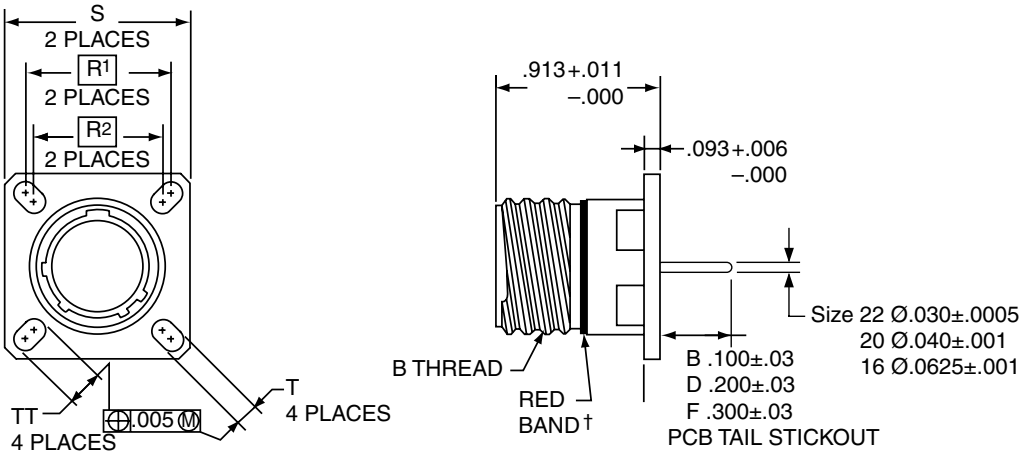

PART # See chart below	1. Base Number	2. Coded Shell Size	3. Insert Arrg.	4. Contact Type/Alt. Keying	5. Shell Finish	6. Tail Length
	10-626	501	-35	P	1	B

HOW TO ORDER

1. BASE NUMBER:

10-626	Base Number for MIL-DTL-38999 Series III Hermetic with PCB Tail

2. SELECT A CODED SHELL SIZE:

See chart below 501-509, designates size 9-25 shell size.
Example: 501 = Size 9 Shell

3. SELECT AN INSERT ARRANGEMENT:

Refer to insert availability chart on page 2-5 and pin-out illustrations on pages 15-29. Please enter the second number which represents the Insert Arrangement number.

-35	Designates Insert Arrangement Number

4. CONTACT TYPE/ALTERNATE KEYING POSITIONS:

Refer to page 47 for alternate rotation letters to use.

P	Designates Pin Contacts in Normal Position
S	Designates Socket Contacts in Normal Position

5. SELECT A SHELL FINISH:

1	Hermetic seal, passivated Stainless Steel, 200°C
2	Hermetic seal, Stainless Steel w/Nickel Plate
3	Carbon Steel w/reflowed tin plate

6. SELECT A TAIL LENGTH:

B	.100±.03
D	.200±.03
F	.300±.03

Shell Size	Part Number	B Thread 0.1P-0.3L-TS (Plated)	R1	R2	S ±.010	T ±.008	TT ±.008
9	10-626501-XXX	.6250	.719	.594	.938	.128	.216
11	502-XXX	.7500	.812	.719	1.031	.128	.194
13	503-XXX	.8750	.906	.812	1.125	.128	.194
15	504-XXX	1.0000	.969	.906	1.219	.128	.173
17	505-XXX	1.1875	1.062	.969	1.312	.128	.194
19	506-XXX	1.2500	1.156	1.062	1.438	.128	.194
21	507-XXX	1.3750	1.250	1.156	1.562	.128	.194
23	508-XXX	1.5000	1.375	1.250	1.688	.154	.242
25	509-XXX	1.6250	1.500	1.375	1.812	.154	.242

All dimensions for reference.

☐ Designates true position dimensioning

† Red band indicates fully mated

NOTE: Consult Amphenol Aerospace for availability of non-glass-sealed versions with printed circuit tail contacts.

PCB Hermetic Jam Nut Receptacle

Commercial

Amphenol Aerospace

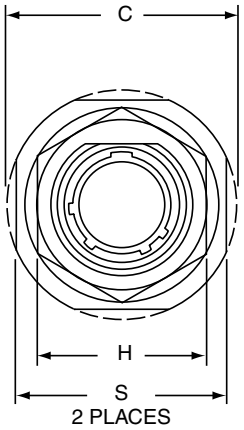

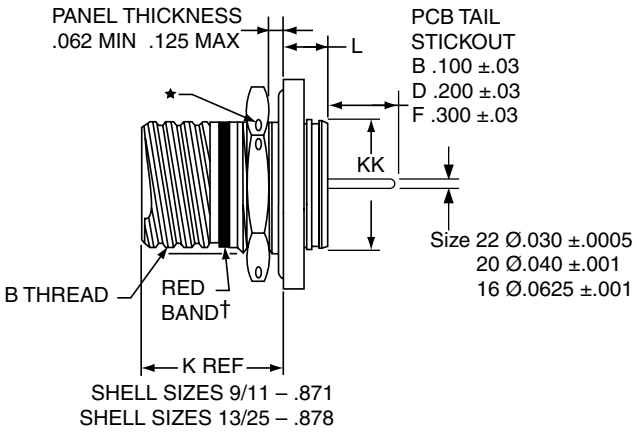

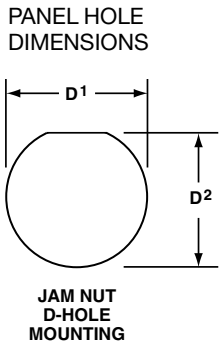

	1.	2.	3.	4.	5.	6.
PART # See chart below	Base Number	Coded Shell Size	Insert Arrg.	Contact Type/Alt. Keying	Shell Finish	Tail Length
	10-626	471	-35	P	1	B

HOW TO ORDER

1. BASE NUMBER:

10-626	Base Number for MIL-DTL-38999 Series III Hermetic with PCB Tail

2. SELECT A CODED SHELL SIZE:

See chart below **471-479**, designates size 9-25 shell size.

3. SELECT AN INSERT ARRANGEMENT:

Refer to insert availability chart on page 2-5 and pin-out illustrations on pages 15-29. Please enter the second number which represents the Insert Arrangement number.

-35	Designates Insert Arrangement Number

4. CONTACT TYPE/ALTERNATE KEYING POSITIONS:

Refer to page 47 for alternate rotation letters to use.

P	Designates Pin Contacts in Normal Position
S	Designates Socket Contacts in Normal Position

5. SELECT A SHELL FINISH:

1	Hermetic seal, passivated Stainless Steel, 200°C
2	Hermetic seal, Stainless Steel w/Nickel Plate
3	Carbon Steel w/reflowed tin plate

6. SELECT A TAIL LENGTH:

B	100 ±.03
D	.200 ±.03
F	.300 ±.03

† Red band indicates fully mated

★ .059 dia. min. (1.5 dia. min.) 3 lockwire holes. Formed lockwire hole design (6 holes) is optional.

Shell Size	Part Number	B Thread Class 2A 0.1P-0.3L-TS (Plated)	C Max	D1 +.010 –.000	D2 +.000 –.010	H Hex +.017 –.016	L Max	S ±.010	KK +.011 –.000
9	**10-626**471-XXX	.6250	1.199	.700	.670	.875	.357	1.062	.642
11	472-XXX	.7500	1.386	.825	.770	1.000	.357	1.250	.766
13	473-XXX	.8750	1.511	1.010	.955	1.188	.357	1.375	.892
15	474-XXX	1.0000	1.636	1.135	1.085	1.312	.357	1.500	1.018
17	475-XXX	1.1875	1.761	1.260	1.210	1.438	.357	1.625	1.142
19	476-XXX	1.2500	1.949	1.385	1.335	1.562	.381	1.182	1.268
21	477-XXX	1.3750	2.073	1.510	1.460	1.688	.381	1.938	1.392
23	478-XXX	1.5000	2.199	1.635	1.585	1.812	.381	2.062	1.518
25	479-XXX	1.6250	2.323	1.760	1.710	2.000	.381	2.188	1.642

All dimensions for reference only.

PCB Hermetic Solder Mounting Receptacle

Commercial

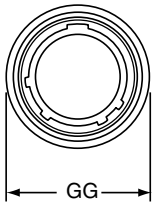

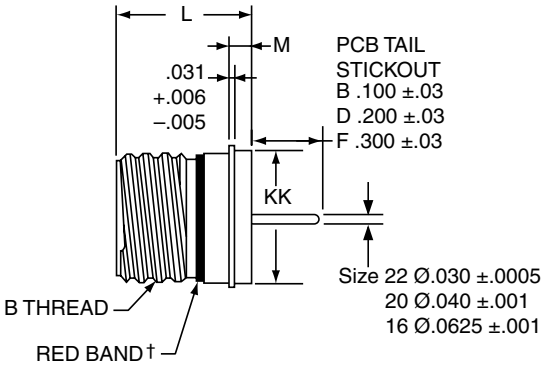

	1.	2.	3.	4.	5.	6.
PART # See chart below	Base Number	Coded Shell Size	Insert Arrg.	Contact Type/Alt. Keying	Shell Finish	Tail Length
	10-626	481	-35	P	1	B

HOW TO ORDER

1. BASE NUMBER:

10-626	Base Number for MIL-DTL-38999 Series III Hermetic with PCB Tail

2. SELECT A CODED SHELL SIZE:

See chart below 481-489, designates size 9-25 shell size.

3. SELECT AN INSERT ARRANGEMENT:

Refer to insert availability chart on page 2-5 and pin-out illustrations on pages 15-29. Please enter the second number which represents the Insert Arrangement number.

-35	Designates Insert Arrangement Number

4. CONTACT TYPE/ALTERNATE KEYING POSITIONS:

Refer to page 47 for alternate rotation letters to use.

P	Designates Pin Contacts in Normal Position
S	Designates Socket Contacts in Normal Position

5. SELECT A SHELL FINISH:

1	Hermetic seal, passivated Stainless Steel, 200°C
2	*Hermetic seal, Stainless Steel w/Nickel Plate
3	*Carbon Steel w/reflowed tin plate

6. SELECT A TAIL LENGTH:

B	.100±.03
D	.200±.03
F	.300±.03

† Red band indicates fully mated

Shell Size	Part Number	B Thread Class 2A 0.1P-0.3L-TS (Plated)	L +.011 –.005	M +.006 –.005	GG Dia. +.011 –.010	KK Dia +.011 –.005
9	**10-626**481-XXX	.6250	.806	.125	.750	.672
11	482-XXX	.7500	.806	.125	.844	.781
13	483-XXX	.8750	.806	.125	.969	.906
15	484-XXX	1.0000	.806	.125	1.094	1.031
17	485-XXX	1.1875	.806	.125	1.218	1.156
19	486-XXX	1.2500	.806	.125	1.312	1.250
21	487-XXX	1.3750	.806	.125	1.438	1.375
23	488-XXX	1.5000	.838	.156	1.563	1.500
25	489-XXX	1.6250	.838	.156	1.688	1.625

PCB Hermetic Weld Mounting Receptacle

Commercial

Amphenol Aerospace

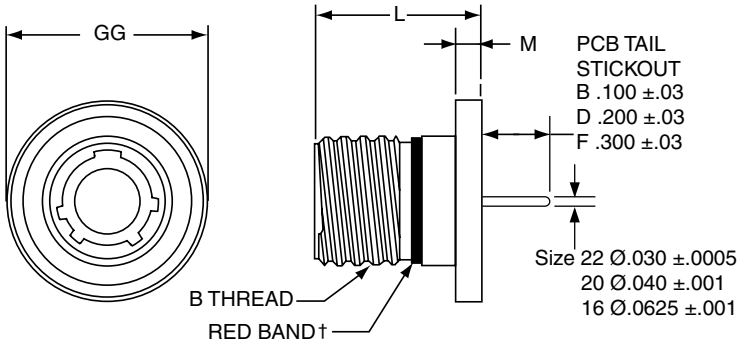

† Red band indicates fully mated

PART # See chart below	1. Base Number	2. Coded Shell Size	3. Insert Arrg.	4. Contact Type/Alt. Keying	5. Shell Finish	6. Tail Length
	10-626	491	-35	P	1	B

HOW TO ORDER

1. BASE NUMBER:

10-626	Base Number for MIL-DTL-38999 Series III Hermetic with PCB Tail

2. SELECT A CODED SHELL SIZE:

See chart below 491-499, designates size 9-25 shell size.

3. SELECT AN INSERT ARRANGEMENT:

Refer to insert availability chart on page 2-5 and pin-out illustrations on pages 15-29. Please enter the second number which represents the Insert Arrangement number.

-35	Designates Insert Arrangement Number

4. CONTACT TYPE/ALTERNATE KEYING POSITIONS:

Refer to page 47 for alternate rotation letters to use.

P	Designates Pin Contacts in Normal Position
S	Designates Socket Contacts in Normal Position

5. SELECT A SHELL FINISH:

1	Hermetic seal, passivated Stainless Steel, 200°C
2	*Hermetic seal, Stainless Steel w/Nickel Plate
3	*Carbon Steel w/reflowed tin plate

6. SELECT A TAIL LENGTH:

B	.100±.03
D	.200±.03
F	.300±.03

Shell Size	Part Number	B Thread Class 2A 0.1P-0.3L-TS (Plated)	L +.011 –.000	M +.006 –.005	GG Dia. +.011 –.010
9	**10-626**491-XXX	.6250	.806	.125	.973
11	492-XXX	.7500	.806	.125	1.095
13	493-XXX	.8750	.806	.125	1.221
15	494-XXX	1.0000	.806	.125	1.347
17	495-XXX	1.1875	.806	.125	1.434
19	496-XXX	1.2500	.806	.125	1.579
21	497-XXX	1.3750	.806	.125	1.721
23	498-XXX	1.5000	.838	.156	1.886
25	499-XXX	1.6250	.838	.156	1.973

* Not available for weld mount. All dimensions for reference only.

Hermetic Box Mounting Receptacle

Military (D38999/21), Commercial (TVPS02)

PART NUMBER BUILDER Page 43-47
ONLINE CONFIGURATOR www.amphenol-aerospace.com

MILITARY
D38999/21

Commercial

STAINLESS STEEL
TVPS02Y
TVPS02YN

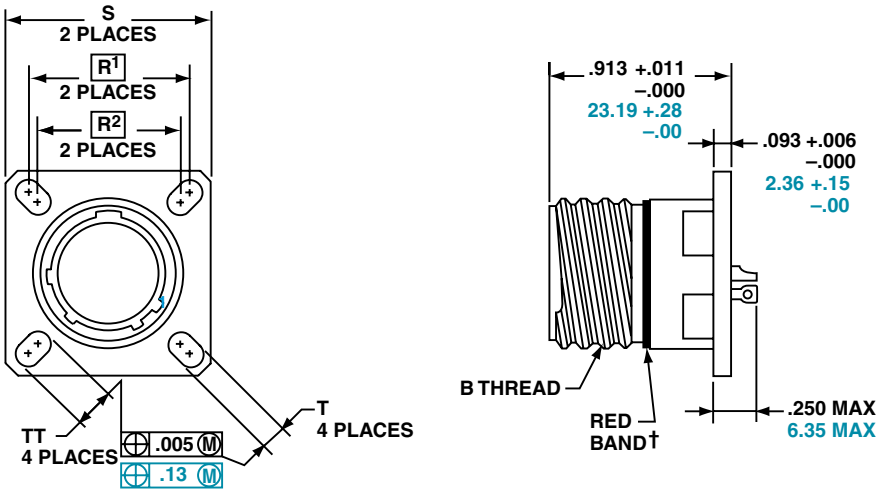

† Red band indicates fully mated

NOTE: Consult Amphenol Aerospace for availability of non-glass-sealed versions with printed circuit tail contacts.

Inches

Shell Size	MS Shell Size Coded	B Thread 0.1P-0.3L-TS (Plated)	R1	R2	S ±.010	T ±.008	TT ±.008
9	A	.6250	.719	.594	.938	.128	.216
11	B	.7500	.812	.719	1.031	.128	.194
13	C	.8750	.906	.812	1.125	.128	.194
15	D	1.0000	.969	.906	1.219	.128	.173
17	E	1.1875	1.062	.969	1.312	.128	.194
19	F	1.2500	1.156	1.062	1.438	.128	.194
21	G	1.3750	1.250	1.156	1.562	.128	.194
23	H	1.5000	1.375	1.250	1.688	.154	.242
25	J	1.6250	1.500	1.375	1.812	.154	.242

Millimeters

Shell Size	MS Shell Size Coded	R1	R2	S ±.25	T ±.20	TT ±.20
9	A	18.26	15.09	23.83	3.25	5.49
11	B	20.62	18.26	26.19	3.25	4.93
13	C	23.01	20.62	28.58	3.25	4.93
15	D	24.61	23.01	30.96	3.25	4.39
17	E	26.97	24.61	33.32	3.25	4.93
19	F	29.36	26.97	36.53	3.25	4.93
21	G	31.75	29.36	39.67	3.25	4.93
23	H	34.93	31.75	42.88	3.91	6.15
25	J	38.10	34.93	46.02	3.91	6.15

All dimensions for reference only

☐ Designates true position dimensioning

Hermetic Jam Nut Receptacle

Military (D38999/23), Commercial (TVS07)

Amphenol Aerospace

PART NUMBER BUILDER Page 43-47
ONLINE CONFIGURATOR www.amphenol-aerospace.com

MILITARY
D38999/23

Commercial

STAINLESS STEEL
TVS07Y
TVS07YN

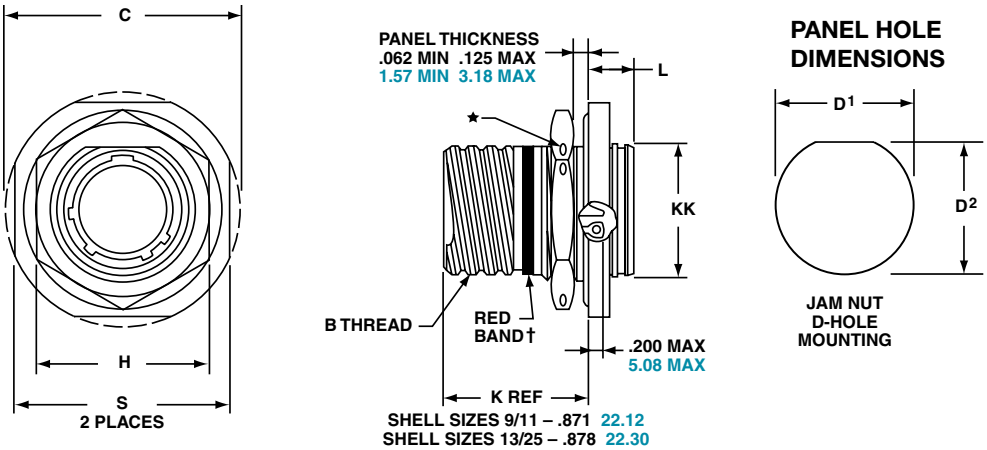

† Red band indicates fully mated
★ .059 dia min.
1.5 dia min. 3 lockwire holes Formed lockwire hole design (6 holes) is optional.

Inches

Shell Size	MS Shell Size code	B Thread Class 2A 0.1P-0.3L-TS (Plated)	C Max	D[1] +.010 –.000	D[2] +.000 –.010	H Hex +.017 –.016	L Max	S ±.010	KK +.011 –.000
9	A	.6250	1.199	.693	.657	.875	.357	1.062	.642
11	B	.7500	1.386	.825	.770	1.000	.357	1.250	.766
13	C	.8750	1.511	1.010	.955	1.188	.357	1.375	.892
15	D	1.0000	1.636	1.135	1.085	1.312	.357	1.500	1.018
17	E	1.1875	1.761	1.260	1.210	1.438	.357	1.625	1.142
19	F	1.2500	1.949	1.385	1.335	1.562	.381	1.812	1.268
21	G	1.3750	2.073	1.510	1.460	1.688	.381	1.938	1.392
23	H	1.5000	2.199	1.635	1.585	1.812	.381	2.062	1.518
25	J	1.6250	2.323	1.760	1.710	2.000	.381	2.188	1.642

Millimeters

Shell Size	MS Shell Size code	C Max	D[1] +.25 –.00	D[2] +.00 –.25	H Hex +.43 –.41	L Max	S ±.25	KK +.28 –.00
9	A	30.45	17.60	16.70	22.23	9.07	26.97	16.31
11	B	35.20	20.96	19.59	25.40	9.07	31.75	19.46
13	C	38.38	25.65	24.26	30.18	9.07	34.93	22.66
15	D	41.55	28.83	27.56	33.32	9.07	38.10	25.86
17	E	44.73	32.01	30.73	36.53	9.07	41.28	29.01
19	F	49.50	35.18	33.91	39.67	9.68	46.02	32.21
21	G	52.65	38.35	37.08	42.80	9.68	49.23	35.36
23	H	55.85	41.53	40.26	46.02	9.68	52.37	38.56
25	J	59.00	44.70	43.43	50.80	9.68	55.58	41.71

All dimensions for reference only

Hermetic Solder Mounting Receptacle

Military (D38999/25), Commercial (TVSI)

PART NUMBER BUILDER Page 43-47
ONLINE CONFIGURATOR www.amphenol-aerospace.com

MILITARY
D38999/25

Commercial

STAINLESS STEEL
TVSIY
TVSIYN

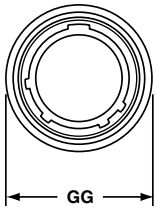

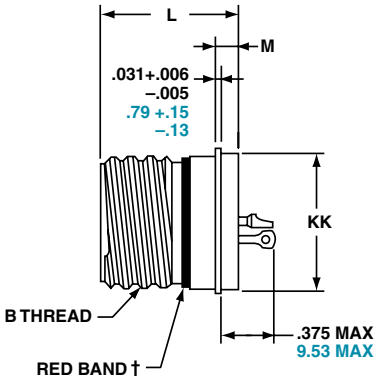

† Red band indicates fully mated

Inches

Shell Size	MS Shell Size Code	B Thread Class 2A 0.1P-0.3L-TS (Plated)	L +.011 –.005	M +.006 –.005	GG Dia. +.011 –.010	KK Dia +.011 –.005
9	A	.6250	.806	.125	.750	.672
11	B	.7500	.806	.125	.844	.781
13	C	.8750	.806	.125	.969	.906
15	D	1.0000	.806	.125	1.094	1.031
17	E	1.1875	.806	.125	1.218	1.156
19	F	1.2500	.806	.125	1.312	1.250
21	G	1.3750	.806	.125	1.438	1.375
23	H	1.5000	.838	.156	1.563	1.500
25	J	1.6250	.838	.156	1.688	1.625

Millimeters

Shell Size	MS Shell Size Code	L +.28 –.00	M +.15 –.13	GG Dia. +.28 –.25	KK Dia +.03 –.13
9	A	20.47	3.18	19.05	17.07
11	B	20.47	3.18	21.44	19.84
13	C	20.47	3.18	24.61	23.01
15	D	20.47	3.18	27.79	26.19
17	E	20.47	3.18	30.94	29.36
19	F	20.47	3.18	33.32	31.75
21	G	20.47	3.18	36.53	34.93
23	H	21.29	3.96	39.70	38.10
25	J	21.29	3.96	42.88	41.28

Hermetic Wall Mounting Receptacle

Military (D38999/27), Commercial (TVSHIY)

PART NUMBER BUILDER Page 42-46
ONLINE CONFIGURATOR
www.amphenol-aerospace.com

MILITARY
D38999/27

Commercial

STAINLESS STEEL
TVSHIY
TVSHIYN

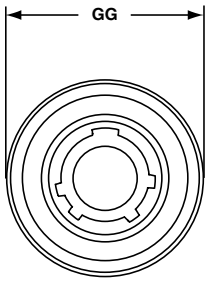

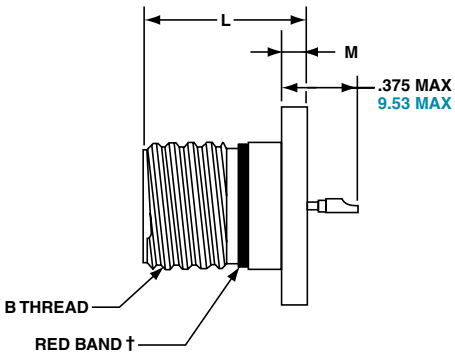

† Red band indicates fully mated

Inches

Shell Size	MS Shell Size Code	B Thread Class 2A 0.1P-0.3L-TS (Plated)	L +.011 –.000	M +.006 –.005	GG Dia. +.011 –.010
9	A	.6250	.806	.125	.973
11	B	.7500	.806	.125	1.095
13	C	.8750	.806	.125	1.221
15	D	1.0000	.806	.125	1.347
17	E	1.1875	.806	.125	1.434
19	F	1.2500	.806	.125	1.579
21	G	1.3750	.806	.125	1.721
23	H	1.5000	.838	.156	1.886
25	J	1.6250	.838	.156	1.973

Millimeters

Shell Size	MS Shell Size Code	L +.28 –.00	M +.15 –.13	GG Dia. +.25 –.00
9	A	20.47	3.18	24.71
11	B	20.47	3.18	27.81
13	C	20.47	3.18	31.01
15	D	20.47	3.18	34.21
17	E	20.47	3.18	36.42
19	F	20.47	3.18	40.11
21	G	20.47	3.18	43.71
23	H	21.29	3.96	47.90
25	J	21.29	3.96	50.11

All dimensions for reference only

Series III, TV Breakaway Fail-Safe Connectors

Quick-Disconnect with an Axial Pull of Lanyard

Amphenol Aerospace

Amphenol® Tri-Start Breakaway Fail-Safe Connectors provide unequaled performancein environments requiring instant disengagement.
The "Breakaway" Fail-Safe connector family offers a wide range of electrical and mechanical features:

- Instant decoupling and damage free separation
- Completely intermateable with standard receptacles (D38999/20 and /24)
- Inventory support commonality through the use of standard insert arrangements and contacts

Breakaway unmating is initiated by applying a pull force to the lanyard which causes the operating sleeve on the plug to move away from the receptacle. Coupling segments on the plug then move away from the mating receptacle while expanding, thus releasing the receptacle. After completion of the unmating sequence, spring compression returns the sleeve and segments to their original positions. Unmating of the plug may also be accomplished by normal rotation of the coupling ring without affecting the breakaway capability.

TYPE 2 TYPE 6 TYPE 1

Amphenol offers a variety of lanyard plug styles including MIL-STD-1760 types 1, 2 and 6 for Stores Management applications.

The Tri-Start Breakaway Fail-Safe connector exceeds the MIL-Spec Series III requirements for EMI/EMP shielding and features include:

- Solid metal-to-metal coupling
- EMI grounding fingers
- Conductive finishes

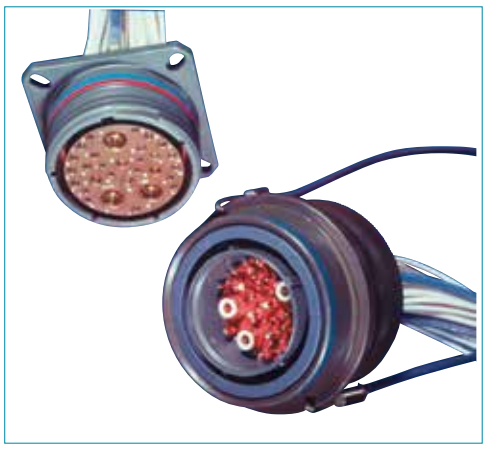

Breakaway with Coax Contacts

Amphenol Breakaway Fail-Safe connectors are qualified to MIL-DTL-38999/29, /30 and /31 (for MIL-STD-1760 Stores Management applications). Amphenol also manufactures custom breakaway connectors including those with:

- Highly durable non-metallic operating sleeves in a variety of lengths and diameters
- Increased pull-force capability
- Low-profile designs
- Custom lanyard lengths and backshells
- Low force separation capabilities
- Low insertion/separation force contacts
- Non-cadmium finishes

Contact your local Amphenol representative. Whether you need a standard Breakaway, one of our custom Breakaways, or a unique Breakaway design.

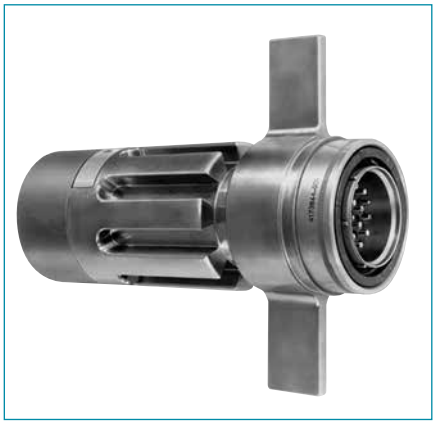

Special configuration Fail-Safe used on space telescope application. Lanyard is replaced by a swivel ring for remote disconnect and "wing arms" have been added for manual actuation accessibility by gloved astronauts.

TV Breakaway Fail-Safe Lanyard Release Plug

Military (D38999/29 & D38999/30)

HOW TO ORDER - MILITARY

1. DOD Number Prefix	2. Spec Sheet Number	3. Service Class	4. Shell Size	5. Insert Arrangement	6. Lanyard Length Code	7. Alternate Keying Position
D38999/	29	F	E	35	P	N

1. DOD NUMBER PREFIX

D38999/	Designates MIL-DTL-38999, Series III, Tri-Start Connector

2. SPECIFICATION SHEET NUMBER

29	Lanyard Release Plug with pin contacts
30	Lanyard Release Plug with socket contacts

3. SERVICE CLASS

F	Designates electroless nickel plated aluminum, optimum EMI shielding effectiveness –65dB@10 GHz specification min., 48 hour salt spray, 200°C
W	Designates corrosion resistant olive drab cadmium plate aluminum, 500 hour extended salt spray, EMI –50dB@10 GHz specification min., 175°C

4. & 5. INSERT AVAILABILITY

Shell Size- Insert Arrangement	Military Shell Size- Insert Arrangement	Commercial Basic Part# Shell & Insert Arrg. Code	Service Rating	Total Contacts	Contact Size						
					22D	20	16	12	12 Coax	8 Coax	8 Twinax
11-2	N/A	88/91-556508	I	2			2				
11-35	N/A	06	M	13	13						
11-98	N/A	07	I	6		6					
13-4	N/A	10	I	4			4				
13-8	N/A	11	I	8		8					
13-35	N/A	14	M	22	22						
13-98	N/A	13	I	10		10					
15-5	N/A	18	II	5			5				
15-15	N/A	23	I	15		14	1				
15-18	N/A	22	I	18		18					
15-19	N/A	19	I	19		19					
15-35	N/A	20	M	37	37						
15-97	N/A	21	I	12		8	4				
17-6	E-6	27	I	6				6			
17-8	E-8	28	II	8			8				
17-26	E-26	29	I	26		26					
17-35	E-35	30	M	55	55						
17-99	E-99	31	I	23		21	2				
19-11	F-11	37	II	11			11				
19-32	F-32	39	I	32		32					
19-35	F-35	40	M	66	66						
21-11	G-11	47	I	11				11			
21-16	G-16	48	II	16			16				
21-35	G-35	49	M	79	79						
21-39	G-39	51	I	39		37	2				
21-41	G-41	50	I	41		41					
23-21	H-21	57	II	21			21				
23-35	H-35	58	M	100	100						
23-53	H-53	59	I	53		53					
23-54	H-54	61	M	53	40		9	4			
23-55	H-55	60	I	55		55					
25-4	J-4	71	I	56		48	8				
25-19	J-19	66	I	19				19			
25-20	J-20	74	N	30		10	13		4		3
25-24	J-24	72	I	24			12	12			
25-29	J-29	67	I	29			29				
25-35	J-35	68	M	128	128						
25-43	J-43	69	I	43		23	20				
25-46	J-46	73	I	46		40	4			2*	
25-61	J-61	70	I	61		61					

6. MILITARY LANYARD LENGTH CODE

Table II

Lanyard Length (in.) ± .236	Lanyard Length (mm) ± 6.0	Lanyard Length Code For Part Number
4.016	102	A
4.528	115	B
5.000	127	C
5.512	140	D
6.024	153	E
6.535	166	F
7.008	178	G
7.520	191	H
7.992	203	I
8.503	216	J
9.016	229	K
9.528	242	L
10.000	254	M
10.512	267	N
11.024	280	P
11.535	293	R
12.008	305	S
12.520	318	T
13.031	331	U
14.016	356	V
15.000	381	W
16.024	407	X
17.008	432	Y
18.031	458	Z

7. MILITARY ALTERNATE KEYING POSITION

For alternate positions of connector (to prevent cross-mating) (N indicates normal).

Shell Size	Key & Keyway Arrangement Identification Letter	AR° or AP° BSC	BR° or BP° BSC	CR° or CP° BSC	DR° or DP° BSC
7, 7H	N*	120	240	NA	NA
	A	132	248		
	B	80	230		
	C	140	275		
	D	155	234		
	E	131	197		
9	N*	105	140	215	265
	A	102	132	248	320
	B	80	118	230	312
	C	35	140	205	275
	D	64	155	234	304
	E	91	131	197	240
11, 13, and 15	N*	95	141	208	236
	A	113	156	182	292
	B	90	145	195	252
	C	53	156	220	255
	D	119	146	176	298
	E	51	141	184	242
17 and 19	N*	80	142	196	293
	A	135	170	200	310
	B	49	169	200	244
	C	66	140	200	257
	D	62	145	180	280
	E	79	153	197	272
21, 23, and 25	N*	80	142	196	293
	A	135	170	200	310
	B	49	169	200	244
	C	66	140	200	257
	D	62	145	180	280
	E	79	153	197	272
25L, 33, and 37	N*	80	142	188	293
	A	135	170	188	310
	B	49	169	188	244
	C	66	140	188	257
	D	62	145	188	280
	E	79	153	188	272

RECEPTACLE (FRONT FACE SHOWN)

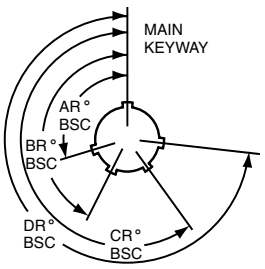

PLUG (FRONT FACE SHOWN)

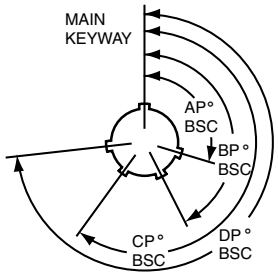

TV Breakaway Fail-Safe Lanyard Release Plug

Commercial (88-5565 & 91-5565)

HOW TO ORDER - COMMERCIAL

Ordering procedure for example part number 88-556529-EP is shown below:

1. Service Class	2. Connector Type Identification	3. Shell Size & Insert Arrg. Code	4. Required Field	5. Lanyard Length Code	6. Contact Type/Alternate Keying Position
88	-5565	29	0	E	P

1. SERVICE CLASS

88	Designates corrosion resistant olive drab cadmium plate over nickel, 500 hour extended salt spray, EMI –50dB @ 10 GHz specification min., 175°C
91	Designates electroless nickel plated aluminum, optimum EMI shielding effectiveness –65dB @ 10 GHz specification min., 48 hour salt spray, 200°C

These are standard finishes. Consult Amphenol Aerospace for other variations.

2. CONNECTOR TYPE IDENTIFICATION

-5565	Designates MIL-DTL-38999, Series III Tri-Start Lanyard Release Plug

3. SELECT A COMMERCIAL SHELL SIZE & INSERT ARRANGEMENT CODE

MIL-DTL-38999, see insert availability chart on page 71.

4. REQUIRED FIELD

0	THE REQUIRED FIELD IS ALWAYS A 0

5. SELECT A LANYARD LENGTH CODE

Lanyard Length (in.) ± .236	Lanyard Length (mm) ± 6.0	Lanyard Length Code For Part Number
4.016	102	A
4.528	115	B
5.000	127	C
5.512	140	D
6.024	153	E
6.535	166	F
7.008	178	G
7.520	191	H
7.992	203	I
8.503	216	J
9.016	229	K
9.528	242	L
10.000	254	M
10.512	267	N
11.024	280	P
11.535	293	R
12.008	305	S
12.520	318	T
13.031	331	U
14.016	356	V
15.000	381	W
16.024	407	X
17.008	432	Y
18.031	458	Z

6. SELECT A CONTACT TYPE/ALTERNATE KEYING POSITION

P designates pin, S designates socket for normal positioning of contacts. When an alternate position of the connector is required to prevent cross-mating, a different letter (other than P or S) is used. See alternate positioning on page 73, then convert to Amphenol Commercial coding by the following chart.

Pin Contacts		Socket Contacts	
MS Letter	Amphenol letter	MS Letter	Amphenol Letter
PN	P (normal)	SN	S (normal)
PA	G	SA	H
PB	I	SB	J
PC	K	SC	L
PD	M	SD	N
PE	R	SE	T

Fail-Safe Lanyard Release Plug-Crimp, Metal

Military (D38999/29 & D38999/30), Commercial (88-5565 & 91-5565)

PART NUMBER BUILDER Page 72-74
ONLINE CONFIGURATOR www.amphenol-aerospace.com

MILITARY
D38999/29 Pin
D38999/30 Socket

Commercial

STAINLESS STEEL
88-5565
91-5565

METAL

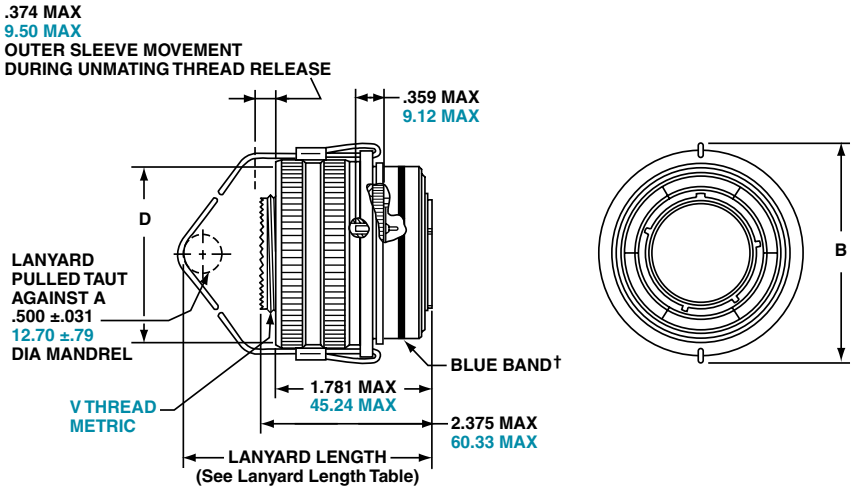

† Blue band indicates rear release contact retention system

Inches

Shell Size	MS Shell Size Code	B Max	D Max Accessory Dia.
11	B	1.846	1.109
13	C	1.972	1.250
15	D	2.079	1.375
17	E	2.205	1.500
19	F	2.301	1.625
21	G	2.472	1.750
23	H	2.594	1.875
25	J	2.705	2.000

Millimeters

Shell Size	MS Shell Size Code	B Max	D Max Accessory Dia.	V Thread Metric
11	B	46.89	28.17	M15X1.0-6g
13	C	50.09	31.75	M18X1.0-6g
15	D	52.81	34.93	M22X1.0-6g
17	E	56.01	38.10	M25X1.0-6g
19	F	58.45	41.28	M28X1.0-6g
21	G	62.79	44.45	M31X1.0-6g
23	H	65.89	47.63	M34X1.0-6g
25	J	68.71	50.08	M37X1.0-6g

TV Breakaway Fail-Safe Lanyard Release

Military (D38999/31) Type 1 & 2 for MIL-STD-1760

Applications- Lanyard Release Plug

HOW TO ORDER - BY MILITARY PART NUMBER FAIL-SAFE D38999/31

Ordering procedure for example part number D38999/31WE20PN1 is shown below:

1. DOD Number Prefix	2. Spec Sheet Number	3. Service Class	4. Lanyard Length Code	5. Insert Arrangement	6. Contact Style	7. Alternate Keying Position	8. Type Number
D38999/	31	W	E	20	P	N	1

1. DOD NUMBER PREFIX

D38999/	MIL-DTL-38999, Series III Tri-Start Connectors

2. SPECIFICATION SHEET NUMBER

31	Designates Lanyard Release Plug for MIL-STD-1760 with pin contacts

3. SERVICE CLASS

F	Electroless nickel plated aluminum, optimum EMI shielding effectiveness –65dB @ 10 GHz specification min., 48 hour salt spray, 200°C
W	Corrosion resistant olive drab cadmium plate aluminum, 500 hour extended salt spray, EMI –50dB @ 10 GHz specification min., 175°C

4. LANYARD LENGTH CODE

Lanyard Length (in.) ±.236	Lanyard Length (mm.) ± 6.0	Lanyard Length Code for Part Number
6.024	153.0	E
6.535	166.0	F
7.008	178.0	G
7.520	191.0	H
7.992	203.0	I
8.504	216.0	J
9.016	229.0	K
9.528	242.0	L

5. INSERT ARRANGEMENT

11	25-11
20	25-20

6. CONTACT STYLE-P & A ARE VALID OPTIONS

P	Replaces the “no designation” option in the PIN on revision C and earlier revision of the Mil-Spec.
A	Designates supplied less contacts.

7. ALTERNATE KEYING POSITION

N	Is required for normal position.

8. TYPE NUMBER
TYPE 1, 2 OR 6. SEE DRAWINGS ON PAGE 77.

For accessories for lanyard release plugs see Accessories section.

MILITARY
D38999/31

TYPE 6
88-555875/76
91-555875/76

TYPE 2
88-558518/19
91-558518/19

TYPE 1-Longer Shell
T3W-16B25-XXXX

TV Breakaway Fail-Safe Lanyard Release

Military (D38999/31) for MIL-STD-1760 Crimp, Metal

MILITARY
D38999/31

TYPE 6
88-555875/76
91-555875/76

TYPE 2
88-558518/19
91-558518/19

TYPE 1
T3W-16B25-XXXX

PIN CONTACTS ONLY, SHELL SIZE 25 ONLY

TYPE 6

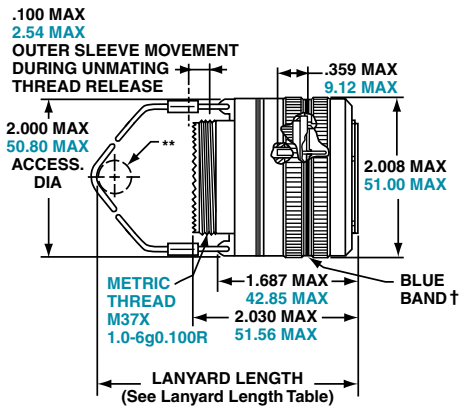

TYPE 2

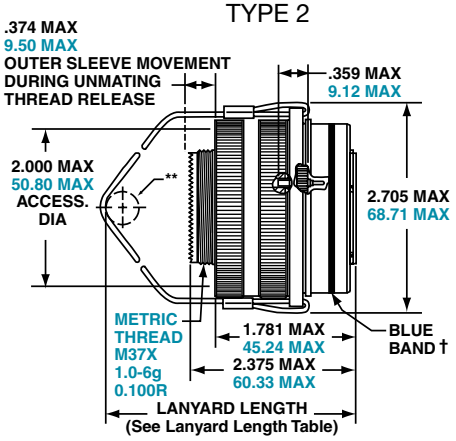

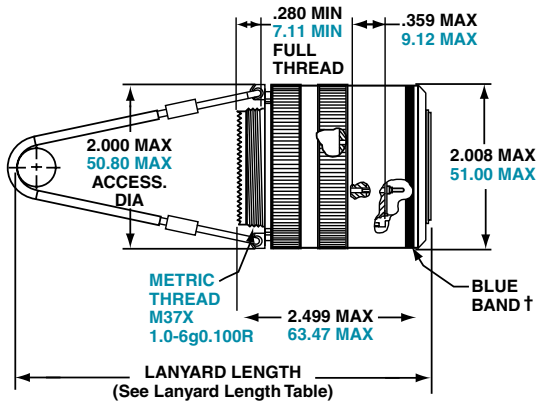

TYPE 1
(LONGER SHELL)

† Blue band indicates rear release contact retention system

** Lanyard pulled taut against a .500 ± .13 dia. Mandrel

All dimensions for reference only

TRI-START LANYARD SEPARATION FORCES

Shell Size	Straight Plug (lbs. max.)	15 Degree Pull (lbs. max.)
25	90	100

INSERT AVAILABILITY FAIL SAFE D38999/31 FOR MIL-STD-1760

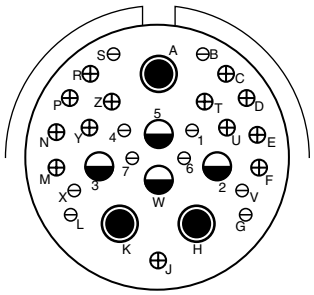

25-20
PRIMARY INTERFACE SIGNAL SET

PIN CONTACT DATA FOR MIL-STD-1760

Insert Arrangement	Service Rating	Total Contacts	Contact			
			20	16	12 (Coax)	8 (Twinax)
25-20	N	30	10	13	4	3

CONTACTS FOR 25-20 PATTERN

Shell Size	Arrg. Number	Number of Contacts	Size Contacts	Service Rating	Contact Location	Standard Contacts	
						Pin	Socket
25	-20	3	8	Twinax	A, H, K	M39029/90-529	M39029/91-530
		4	12	Coax	2,3	M39029/28-211	M39029/75-416
					W, 5	M39029/102-558	M39029/103-559
		13	16	N	C, D, E, F, J, M, N, P, R, T, U, Y, Z	M39029/58-364	M39029/56-352
		10	20	N	B, G, L, S, V, X, 1, 4, 6, 7	M39029/58-363	M39029/56-351

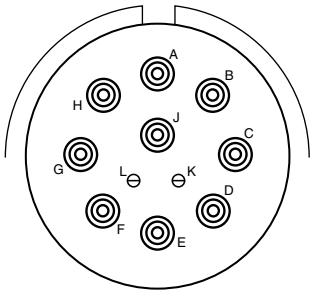

25-11
AUXILIARY POWER SIGNAL SET

Insert Arrangement	Service Rating	Total Contacts	Contact Size	
			20	10 (power)
25-11	N	11	2	9

Contact Legend

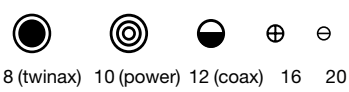

TV Breakaway Fail-Safe Lanyard Release

Commercial version of D38999/31, Type 6

QUICK-DISCONNECT WITH AN AXIAL PULL OF LANYARD

Amphenol offers a commercial version of D38999/31 series III, type 6 connectors. Built from the same time-tested and quality components used in its Mil-Spec counterpart, Amphenol's commercial variant is designed to accept a wider variety of insert arrangements the Mil-Spec does not include. Available in shell size 25, these fail-safe connectors adopt an incredible amount of versatility without sacrificing performance or durability. Consult Amphenol Aerospace for more information.

FEATURES AND BENEFITS

- More versatile than the mil-spec
- 25 lanyards lengths
- Available in all size 25 arrangements
- Low force separation capabilities
- Compatible with all mil-spec backshells and accessories
- Mates to existing D38999 receptacles

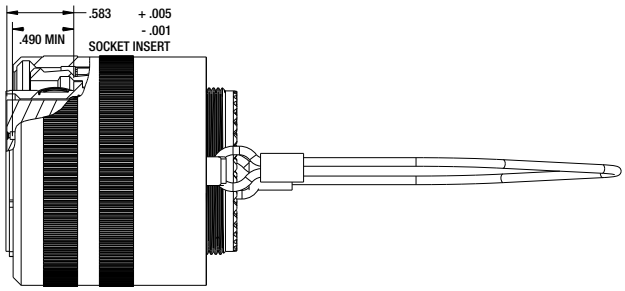

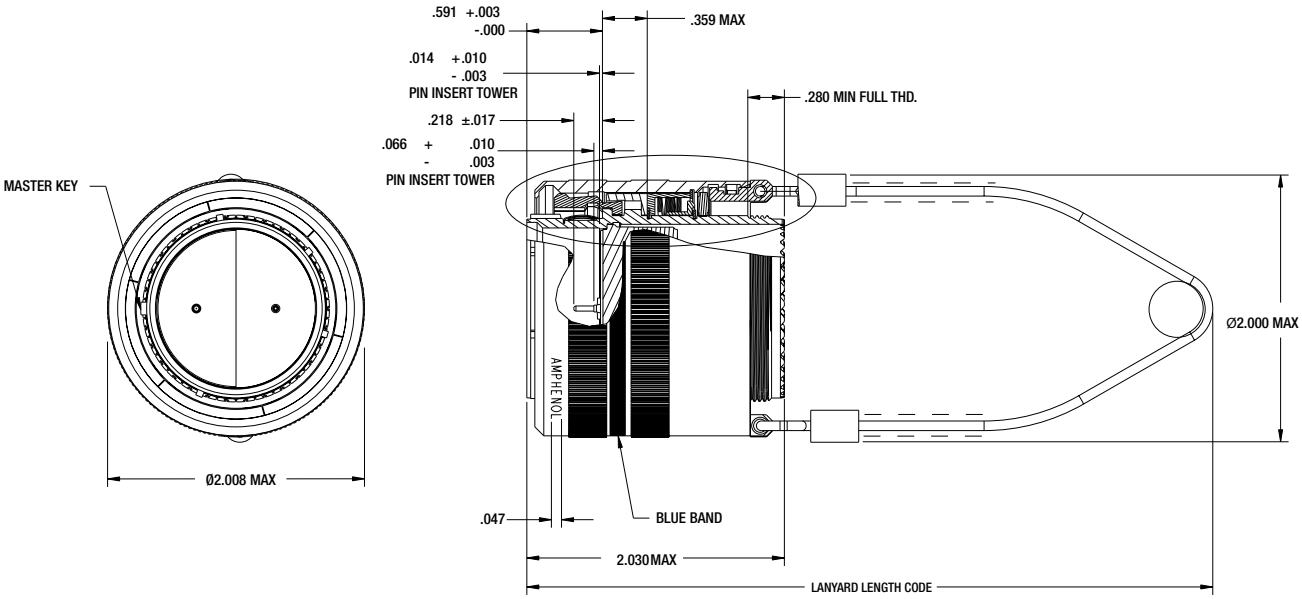

Commercial (88-725010, 88-725014, 88-725041) Version of D38999/31 Type 6

HOW TO ORDER

1. Service Class	2. Shell Style	3. Insert Arrg.	4. Alternate Keying Position (End A)	5. Lanyard Length Code
88-	725010-	04	P	K

1. FINISH*

88-	Olive Drab Cadmium
91-	Electroless Nickel

* Contact Amphenol for availability of other finishes.

2. SHELL STYLE

725010-	D38999/31 Type 6
725014-	Extended Backskirt
725041-	Integrated Banding Platform

3. INSERT ARRANGEMENT

04	25-4
07	25-7
11	25-11
17	25-17
20	25-20
24	25-24
26	25-26
29	25-29
35	25-35
37	25-37
41	25-41
43	25-43
46	25-46
61	25-61
62	25-62
90	25-90
F4	25-F4
187	25-187

4. KEYING

Key Position	Pin	Socket
N	P	S
A	G	H
B	I	J
C	K	L
D	M	N
E	R	T

5. LANYARD LENGTH CODE

Lanyard Length (in.) ± .236	Lanyard Length (mm) ± 6.0	Lanyard Length Code For Part Number
4.016	102	A
4.528	115	B
5.000	127	C
5.512	140	D
6.024	153	E
6.535	166	F
7.008	178	G
7.520	191	H
7.992	203	I
8.503	216	J
9.016	229	K
9.528	242	L
10.000	254	M
10.512	267	N
11.024	280	P
11.535	293	R
12.008	305	S
12.520	318	T
13.031	331	U
14.016	356	V
15.000	381	W
16.024	407	X
17.008	432	Y
18.031	458	Z

INSERT ARRANGEMENTS

Shell Size & Insert Arrg. for:

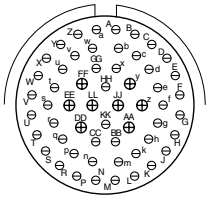
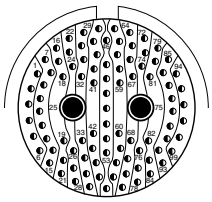
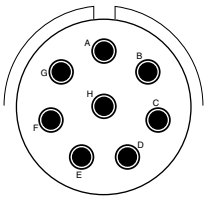
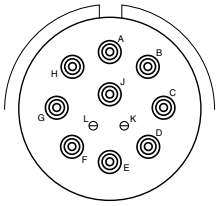

Series III TV	25-04		25-07		25-08	25-11***	
Service Rating	I		M		Twinax	N	
Number of Contacts	48	8	97	2	8	2	9
Contact Size	20	16	22D	8 Twinax	8 Twinax	20	10

Shell Size & Insert Arrg. for:

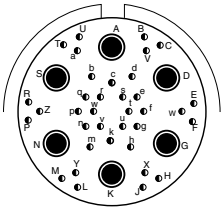
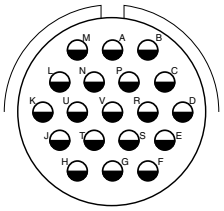
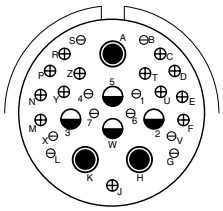
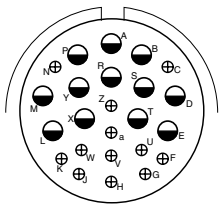

Series III TV	25-17		25-19	25-20***				25-24	
Service Rating	M		I	N				I	
Number of Contacts	36	6	19	10	13	3	4	12	12
Contact Size	22D	8 Twinax	12	20	16	8 Twinax	12 Coax	16	12

Insert Arrangements

Commercial (88-725010 & 88-725014) Version of D38999/31 Type 6

Shell Size & Insert Arrg. for:

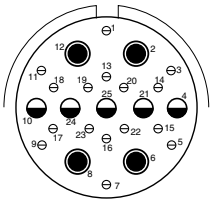
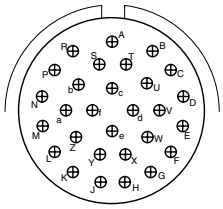
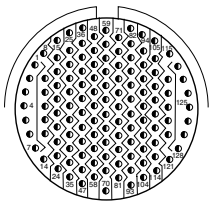
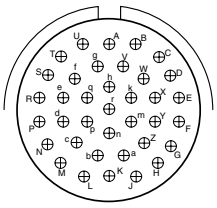

Series III TV	25-26			25-29	25-35	25-37
Service Rating	I			I	M	I
Number of Contacts	16	5	4	29	128	37
Contact Size	20	12	8 Coax	16	22D	16

Shell Size & Insert Arrg. for:

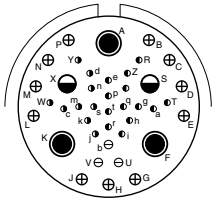
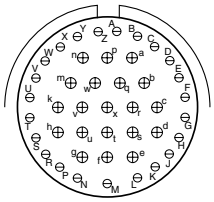
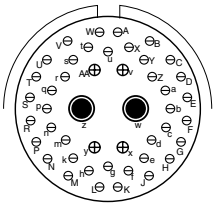
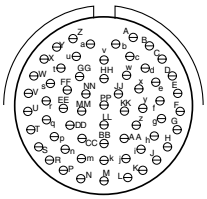

Series III TV	25-41					25-43		25-46			25-61
Service Rating	N/Inst.					I		I			I
Number of Contacts	22	3	11	2	3	23	20	40	4	2	61
Contact Size	22D	20	16	12 Coax	8 Twinax	20	16	20	16	8 Coax †	20

Shell Size & Insert Arrg. for:

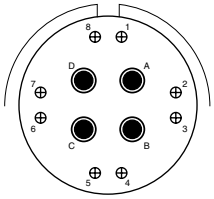
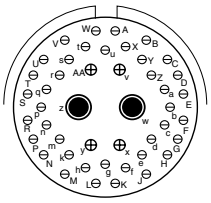
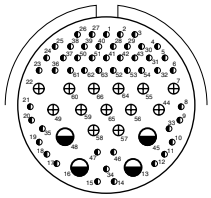
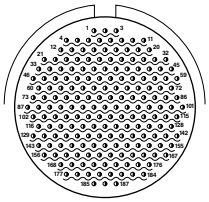

Series III TV	25-62		25-90			25-F4			25-187 HD
Service Rating	I		I			Size 22D=M, Balance =I			N
Number of Contacts	8	4	40	4	2	49	13	4	187
Contact Size	16	8	20	16	8 Twinax	22D	16	12	23
	Ground Plane Only								

SPECIALS

Shell Size & Insert Arrg. for:

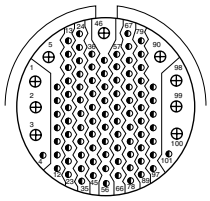
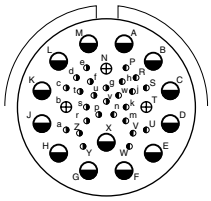
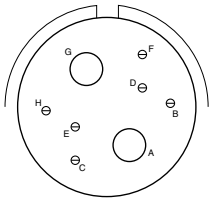
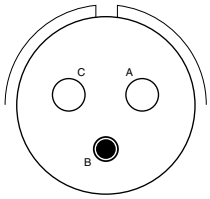
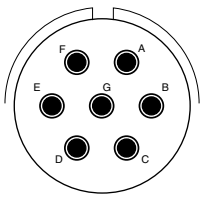

Series III TV	25-92		25-97			25-16		25L-3		25L-7
Service Rating	M		M			M		II		II
Number of Contacts	92	9	26	3	13	6	2	1	2	7
Contact Size	22D	16	22D	16	12	20	4	8	4	8

Commercial (88-725014 & 88-725041) Version of D38999/31 Type 6

88-725041 INTEGRATED BANDING PLATFORM

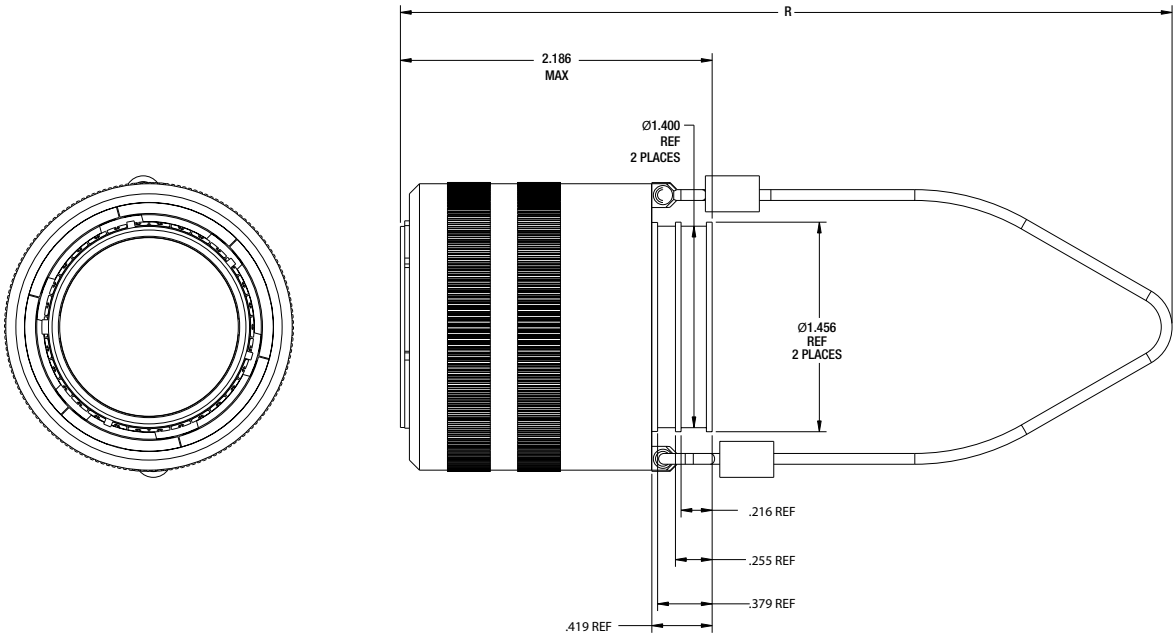

88-725014 EXTENDED BACKSKIRT

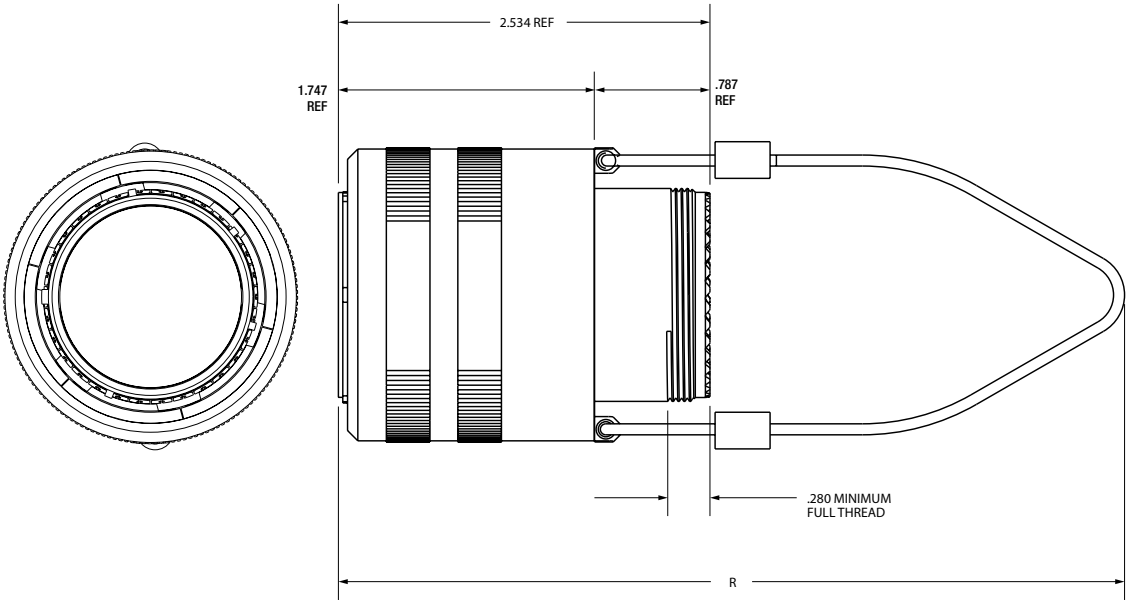

D38999 Type Hybrid Breakaway – Series III

Lower Profile Lanyard Release Plug, Crimp

METAL SHELLS WITH COMPOSITE OPERATING SLEEVE

New Hybrid Lanyard Breakaway Fail-Safe connector with a composite thermoplastic outer operating sleeve for greater durability.

This new hybrid breakaway is the breakaway of choice for the Navy F-18 Program. Amphenol's hybrid lanyard design offers greater durability over D38999 aluminum and composite designs because of its ability to handle abuse taken after weapons release.

Other advantages include:

- Lower profile compared to full metal breakaway Fail-Safe connectors
- Less weight

This Hybrid Breakaway meets the applicable requirements of MIL-DTL-38999/31 including random & sine vibration, ice resistance, fluid immersion and hydrolytic stability tests. (Test reports are available upon request).

Currently the hybrid breakaway is available in shell sizes 25 and 17. It uses standard inserts available for breakaway plugs sizes 25 and 17, and is also available with inserts 25-20 and 25-11 for MIL-STD-1760. These hybrid connectors will accommodate the standard backshells for breakaway connectors shown on Accessories section or the backshell section.

Consult Amphenol Aerospace for ordering of the new hybrid breakaway connectors.

New Hybrid Lanyard Release Plugs (Metal inside shells and Composite, lower profile outer sleeves)

CONDITION/TEST	DESCRIPTION	REFERENCE
Durability	400 complete mating/unmating cycles	MIL-DTL-38999/31D
High Impact Shock	Nine hammer blows from 1,3 and 5 feet, three each in three axes on mounting panel.	MIL-S- 901D
Vibration	10 to 2000Hz in three perpendicular axes, 4 hours in each axis for a total of 12 hours with no fracturing or breaking of parts.	MIL-STD-202F, Method 204
Ice Resistance	Pull tested after conditioned with Ice water at -18C for 35 minutes.	MIL-DTL-38999/31D
Fail Safe Disengagement	Rotationaly unmated 180° from full mate position and pull tested in both a straight direction and at 15°.	MIL-DTL-38999/31D
High Speed Pull Separa-tion	100 cycles at 30 feet per second.	MIL-DTL-38999/31D

STORES MANAGEMENT TYPE II, RAIL LAUNCH

Plugs and Receptacles that meet MIL-STD-1760

Amphenol provides a Breakaway Rail Launch connector that is designed for use on aircraft that carry rail launch missiles such as AMRAAM.

These connectors are designed for blindmating of stores on rail launch applications. They consist of a buffer plug and a missile receptacle that meet the specifications of MIL-STD-1760 Stores Management. Other features and benefits include:

- Designed to MIL-C-83538 specifications
- Bayonet and push pull coupling
- Use standard MIL-DTL-38999 crimp termination with power, coax and twinax contacts also available
- Buffer provides flame barrier
- Buffers are replaceable

Consult Amphenol Aerospace for more information and ordering.

Stores Management Type II Rail Launch Connectors

MIL-DTL-38999/ 27599, Series II JT
MIL-DTL-38999/ 27599, Series I LJT

Amphenol Aerospace

Series I LJT

Series II JT

FEATURES & BENEFITS

Amphenol® LJT and JT Series subminiature cylindrical connectors are qualified to MIL-DTL-38999*, Series I and II respectively. These connectors were developed to meet the needs of the aerospace industry, and provided the impetus for development of the MIL-C-38999 specifications, which has been superseded by MIL-DTL-38999. Meeting or exceeding MIL-DTL-38999 requirements, Amphenol® JT/LJT connectors feature:

- Lightweight, Space Saving Design
- Contact Protection - 100% scoop-proof LJT design prevents bent pins and short circuits during mating
- Quick Positive Coupling - 3 point bayonet lock system
- Mismating Eliminated - with 5 key/keyway design
- Error Proof Alternate Positioning - insured by different key/ keyway locations
- EMI Shielding - grounding fingers standard in LJT Series; optional in JT Series
- Nine Shell Sizes and a Variety of Shell Styles
- Contact Options - size 8, 10, 12, 16, 20, 22M and 22D Crimp, Solder, PCB, Wire wrap, Coax, Twinax, Triax, Thermocouple, Fiber Optic and Filter
- Fixed Solder Contacts - Amphenol MIL-DTL-38999 Series I LJT and II JT, are available in solder versions as both Commercial and Military qualified to MIL-DTL-27599
- Hermetic - air leakage limited to 1 X 10-7 cm3 per second optional
- “Breakaway” Lanyard Release Style - available in LJT plugs. Provides quick disconnect of the connector plug and receptacle with axial pull on the lanyard. See pages 137-142.
- Inventory Support Commonality - uses standard MIL-DTL-38999 contacts, insert arrangements and application tools.
- RoHS Compliant Product Available - Consult Amphenol Aerospace Operations.

Amphenol RoHS EU / 2002 / 95 / EC

TABLE OF CONTENTS

MIL-DTL-38999, Series I and II

Shell Size & Insert Arrangement Availability	2-5
Insert Arrangement Drawings	7-11
PCB Insert Arrangements	15-29
Contact rating/Service Rating/Sealing Plugs	30-32
Series II	85-112
Series I	113-142

MIL-DTL-38999, Series II JT
MIL-DTL-38999, Series I LJT

COMPONENTS

Shell components are impact extruded or machined bar stock aluminum. Standard plating on shell components is cadmium over nickel. Many finishes are optional (see "Specifications" page 32). Hermetic seal receptacles are available in carbon steel or stainless steel shells. Dependable 5 key/keyway polarization with bayonet lock coupling is incorporated to aid and assure positive mating.

Insert material is a rigid dielectric with excellent electrical characteristics, providing durable protection for molded-in solder type contacts. Contrasting letter or number designations are used on insert faces.

A fluorinated silicone interfacial seal wafer is featured on the mating face of "crimp type pin" inserts. This assures complete electrical isolation of pins when connector halves are mated. In addition, a main joint gasket is installed in the receptacle for moisture sealing between connector halves. Both features are also available for hermetic receptacles.

MIL-DTL-38999
Series I LJT

CONTACTS

Maximum design flexibility is built into the JT/LJT Series, with a minimum of 2 to a maximum of 128 circuits per connector in a wide variety of contact arrangements. Contacts are available in sizes 8, 10, 12, 16, 20, 22, 22D and 22M with standard 50 micro inch minimum gold plating (100 micro inches optional). All socket contacts are probe proof. Crimp type rear removable contacts are featured in JT-R and LJT-R connectors. Solder termination contacts are also available, as well as PCB, wire wrap, thermocouple, fiber optic, coaxial, triaxial and twinax contact options.

MIL-DTL-38999
Series II JT

OPTIONAL FEATURES

High temperature capability of 392°F is available only in JTS or LJTS crimp type connectors. High temperature versions feature gold plated contacts, high temperature shell plating, stainless steel coupling nut spring, and epoxy inserts/fluorinated silicone grommet combination. Standard temperature capability for both solder and crimp is 302°F.

The JTN or LJTN type connectors are available for N_2O_4 resistance provided they are mated, and un-grommeted rear faces are suitably protected.

For information on Fail-Safe Lanyard Release style plugs,
see pages 142.

Where proof of high reliability and lot control is required, MS approved equivalents to most proprietary JT and LJT connectors are available.

* MIL-DTL-38999 Series I supersedes MIL-C-38999 Series I.
MIL-DTL-38999 Series II supersedes MIL-C-38999 Series II.

MIL-DTL-38999/ 27599, Series II JT

Amphenol Aerospace

B

TABLE OF CONTENTS FOR SECTION B

MIL-DTL-38999, Series II JT
Shell Size & Insert Arrangement Availability 2-5
Insert Arrangement Drawings 7-11
PCB Insert Arrangements 15-29
Contact rating/Service Rating/Sealing Plugs . . . 30-32
How to Order (Military) 86-87
How to Order (Commercial) 88-90

JT Shell Styles:

Crimp Wall Mounting Receptacle JT00R (MS27472) 91
Crimp Wall Mounting Receptacle for Back Panel Mounting JTPQ00R (MS27497) 92
Crimp Line Receptacle JT01R 93
Crimp Box Mounting Receptacles JT02RE (MS27499), JT02RE(053) (MS27513) 94
Crimp Box Mounting Receptacle for Back Panel Mounting JTP02R (MS27508) 95
Crimp Jam Nut Receptacle JT07R (MS27474) . . 96
Crimp Jam Nut Receptacle (Miniature Jam Nut Mounting Dimensions) JTL07R 97
Crimp Straight Plug JT06R (MS27473) 98
Crimp Straight Plug with Grounding Fingers JTG06R (MS27484) 99
Crimp 90° Plug JT08R (MS27500) 100

HERMETIC:

Hermetic Wall Mounting Receptacle JT00 (MS27475), Hermetic Box Mounting Receptacle JT02 (MS27476) 101
Hermetic Jam Nut Receptacle JT07 (MS27477 & MS27483)
Hermetic Solder Mounting Receptacle JTI (MS27478 & MS27508) 102
Solder Wall Mounting Receptacle JT00 (MS27334), Solder Box Mounting Receptacle JT02 (MS27335) . 103
Solder Straight Plug JT06 (MS27336), Solder Straight Plug with Grounding Ring JTG06A . 104
Solder Jam Nut Receptacle JT07 (MS27337), Solder 90° Plug JT08 105

PCB:

PCB Wall Mounting Receptacle (JTPQ00R). . . . 106
PCB Box Mounting Receptacle, Back Panel (JTP02R) 107
PCB jam Nut Receptacle (JT07) 108
PCB Wall Mounting Receptacle Hermetic (JT00). . 109
PCB box Mounting Receptacle Hermetic (JT02) . . 110
PCB Jam Nut Receptacle Hermetic (JT07) 111
PCB Solder Mounting Receptacle Hermetic (JTI) . 112

Accessories:

Section F 165-184

Military to Commercial Shell Style Conversion Table

How to Order (Military)

MILITARY	DESCRIPTION	COMMERCIAL
MS27472	Crimp Wall Mounting Receptacle	JT00
MS27497	Crimp Wall Mounting Receptacle (Back Panel Mounting)	JTPQ00
MS27499	Crimp Box Mounting Receptacle	JT02, JTS02, JTN02
MS27513	Crimp Box Mounting Receptacle with grommet	JT02, JTS02, JTN02
MS27508	Crimp Box Mounting Receptacle (Back Panel Mounting)	JTP02, JTPN02, JTPS02
MS27473	Crimp Straight Plug	JT06, JTS06, JTN06
MS27484	Crimp Straight Plug with Grounding Fingers	JTG06, JTNG06
MS27474	Crimp Jam Nut Receptacle	JT07, JTS07, JTN07
MS27500	Crimp 90° plug	JT08, JTS08, JTN08
MS27475	Hermetic Wall Mounting Receptacle	JT00
MS27476	Hermetic Box Mounting Receptacle	JT02, JTS02
MS27477	Hermetic Jam Nut Receptacle	
MS27478	Hermetic Solder Mounting Receptacle	JTSIY
	MIL-DTL-27599	
MS27334	Solder Wall Mounting Receptacle	JT00
MS27335	Solder Box Mounting Receptacle	JT02
MS27336	Solder Straight Plug	JT06
MS27337	Solder Jam Mounting Receptacle	JT07

HOW TO ORDER - MILITARY SERIES II

1. MS Number	2. Service Class	3. Shell Size	4. Finishes	5. Insert Arrangement	6. Contact Style (P or S)	7. Alternate Keying Position
MS27472	E	14	A	18	P	A

1. MS NUMBER SERIES II JT	
MS27472	Crimp Wall Mount Receptacle
MS27497	Crimp Wall Mount Receptacle (Back Panel Mounting)
MS27499	Crimp Box Mounting Receptacle
MS27513	Crimp Box Mounting Receptacle with grommet
MS27508	Crimp Box Mounting Receptacle (Back Panel Mounting)
MS27473	Crimp Straight Plug
MS27484	Crimp Straight Plug with Grounding Fingers
MS27474	Crimp Jam Nut Receptacle
MS27500	Crimp 90° plug
MS27475	Hermetic Wall Mounting Receptacle
MS27476	Hermetic Box Mounting Receptacle
MS27477	Hermetic Jam Nut Receptacle
MS27478	Hermetic Solder Mounting Receptacle
MIL-DTL-27599	
MS27334	Solder Wall Mount Receptacle
MS27335	Solder Box Mounting Receptacle
MS27336	Solder Straight Plug
MS27337	Solder Jam Mounting Receptacle

Service Class continues on next page.

Amphenol Aerospace

How to Order (Military)

2. SERVICE CLASS

CRIMP		SOLDER			
WALL MOUNT (472)	BOX MOUNT (499)	WALL MOUNT (334)	JAM NUT (337)	BOX MOUNT (335)	
WALL MOUNT BPM (497)	BOX MOUNT GROMMET (513)	STRAIGHT PLUG (336)			
STRAIGHT PLUG (473)	BOX MOUNT BPM (508)				
STRAIGHT PLUG GF (484)	90° Plug (500)				
JAM NUT (474)					
E	E				Environmental crimp applications. Box Mount versions using spacer grommets are not environmental.
P		P	P		Potting crimp applications. Supplied with spacer grommet and potting boot.
T		T		T	Environmental applications. Supplied without rear accessories. Design provides serrations on rear threads of shells.

2. HERMETIC SERVICE CLASS

WALL MOUNT (475)	
BOX MOUNT (476)	
JAM NUT (477)	
SOLDER MOUNT (478)	
Y	Hermetically interfacial seal

3. & 5. SHELL SIZE

See table on page 2-5

Shell Size & Insert Arrangement are on pages 2-5. First number represents Shell Size, second number is the Insert Arrangement. Place Shell Size in box 3 and Insert Arrangement in box 5.

4. FINISHES

Finish	Military Finish Data
Cadmium plated nickel base 175°C	A
Olive drab cadmium plate nickel base 175°C	B
Electroless nickel 200°C	F
Electroless nickel, space compatible 200°C	
Anodic coating (Alumilite) 200°C	C
Chromate treated (Iridite 14-2) 125°C	
Passivated steel 200°C	E
Nickel-PTFE 175°C	

4. HERMETIC FINISHES

Carbon steel shell tin plated & contacts	D
Stainless steel shell passivated	N
Stainless steel nickel plated	N

6. CONTACTS

P	Pin Contacts
S	Socket Contacts

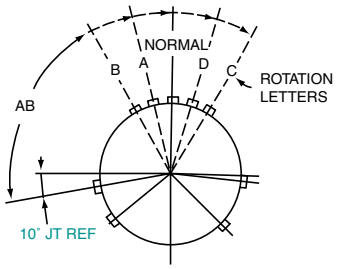

RELATIVE POSSIBLE POSITION OF ROTATED MASTER KEYWAY (front face of receptacle shown)

7. ALTERNATE KEYING POSITION

AB ANGLE OF ROTATION (Degrees)					
Shell Size	Normal	A	B	C	D
8	100°	82°	-	-	118°
10	100°	86°	72°	128°	114°
12	100°	80°	68°	132°	120°
14	100°	79°	66°	134°	121°
16	100°	82°	70°	130°	118°
18	100°	82°	70°	130°	118°
20	100°	82°	70°	130°	118°
22	100°	85°	74°	126°	115°
24	100°	85°	74°	126°	115°

7. SELECT AN ALTERNATE KEYING POSITION

"A" designates Alternate keying connector assembly. Other basic alternate keys are "B", "C" and "D". No letter required for normal rotation (no rotation) position.

A plug with a given rotation letter will mate with a receptacle with the same rotation letter. The AB angle for a given connector is the same whether it contains pins or sockets. Only the master key/keyway rotates in the shell, and the minor keys are fixed.
AB angles shown are viewed from the front face of the connector, a receptacle is shown below. The angles for the plug are exactly the same except the direction of rotation is opposite of that shown for the receptacle.

The "N" designation is not referenced in part number, it is omitted.

MIL-DTL-38999/27599, Series II JT

How to Order (Commercial)

1. Type & Style	2. Service Class	3. Shell Size-Insert Arrg.	4. Contact Type	5. Alternate Position	6. Strain Relief/Finish Variation Suffix	
JT00	RT	9-35	P	B	SR	(014)

1. CONNECTOR TYPE	
JT	Standard Junior Tri-Lock
JTS	High Temperature Connector
JTN	Chemical and Fuel Resistant
JTL	Miniature Mounting Dimensions
JTLN	Miniature Mounting Dimensions/Chemical Resistant
JTLS	Miniature Mounting Dimensions/High Temperature
JTG	Plug with Grounding Fingers
JTNG	Plug with Grrounding Fingers Chemical and Fuel Dimensions

2. SHELL STYLE RECEPTACLE CRIMP	
02	Box Mount Recptacle Panel Mount
00	Wall Mount Receptacle Panel Mount
07	Jam Nut Receptacle
01	Inline Receptacle

2. SHELL STYLE PLUG	
06	Straight Plug
08	90° Plug

2. HERMETIC	
00	Wall Mounting Receptacle
02	Box Mounting Receptacle
07	Jam Nut Receptacle
I	Solder Mounting Receptacle

2. RECEPTACLE WITH PCB CONTACTS	
88/91 56973	Wall Mount Receptacle (Back Panel) See page 106
88/91 56974	Box Mounting Receptace (Back Panel) See page 107
88/91 56975	Jam Nut Receptacle See page 108
10-62643	Wall Mounting Receptacle (Hermetic) See page 109
10-62646	Box Mounting Receptacle (Hermetic) See page 110
10-62644	Jam Nut Receptacle (Hermetic) See page 111
10-62645	Solder Mount Receptacle (Hermetic) See page 112

Wall Mounting Receptacle

Box Mounting Receptacle

Straight Plug

Jam Nut Receptacle

90° Plug

Solder Mounting Receptacle

Amphenol Aerospace

How to Order (Commercial)

2. SELECT A SERVICE CLASS

1. Type & Style	2. Service Class	3. Shell Size-Insert Arrg.	4. Contact Type	5. Alternate Position	6. Strain Relief/Finish Variation Suffix	
JT00	RT	9-35	P	B	SR	(014)

2. SERVICE CLASS

CRIMP			SOLDER				
WALL MOUNT	BOX MOUNT	JAMNUT (JTL)	WALL MOUNT	STRAIGHT PLUG	STRAIGHT PLUG GR	90° PLUG GR	
WALL MOUNT BPM	BOX MOUNT BACKPANEL	90° PLUG	BOX MOUNT				
LINE			JAM NUT				
STRAIGHT PLUG							
STRAIGHT PLUG GF							
JAM NUT							
RE	RE						Environmental crimp applications. Box Mount versions using spacer grommets are not environmental.
RP		RP	P	P		P	Potting crimp applications. Supplied with spacer grommet and potting boot.
RT		RT					Environmental applications. Supplied without rear accessories. Design provides serrations on rear threads of shells.
			A	A	A		General applications- applicable with strain relief.
			C				Pressurized applications- applicable with strain relief.

2. HERMETIC SERVICE CLASS

WALL MOUNT	
BOX MOUNT	
JAM NUT	
SOLDER MOUNT	
Y	Hermetically interfacial seal
H	Hermetic applications- Fused compression glass sealed inserts. Leakage rate less than .01 micron cu. ft./hr. (1 x 10-7 cc/sec.) at 15 psi differential.

3. SELECT A SHELL SIZE & INSERT ARRANGEMENT SEE PAGE 2-5

First number represents Shell Size, second number is the Insert Arrangement.

1. Type & Style	2. Service Class	3. Shell Size-Insert Arrg.	4. Contact Type	5. Alternate Position	6. Special Variations
		22-2	P		

4. CONTACT TYPE

P	Pin Contacts
S	Socket Contacts

MIL-DTL-38999/ 27599, Series II JT

How to Order (Commercial)

1. Connector Type	2. Service Class	3. Shell Size Insert Arrg.	4. Contact Type	5. Alternate Position	6. Special Variations
				A	

5. SELECT AN ALTERNATE KEYING POSITION

"A" designates Alternate keying connector assembly. Other basic alternate keys are "B", "C" and "D". No letter required for normal rotation (no rotation) position.

A plug with a given rotation letter will mate with a receptacle with the same rotation letter. The AB angle for a given connector is the same whether it contains pins or sockets. Only the master key/keyway rotates in the shell, and the minor keys are fixed.
AB angles shown are viewed from the front face of the connector, a receptacle is shown below. The angles for the plug are exactly the same except the direction of rotation is opposite of that shown for the receptacle.

The "N" designation is not referenced in part number, it is omitted.

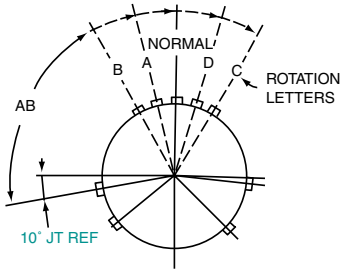

RELATIVE POSSIBLE POSITION OF ROTATED MASTER KEYWAY (front face of receptacle shown)

JT Key/Keyway Rotation

AB ANGLE OF ROTATION (Degrees)					
Shell Size	Normal	A	B	C	D
8	100°	82°	-	-	118°
10	100°	86°	72°	128°	114°
12	100°	80°	68°	132°	120°
14	100°	79°	66°	134°	121°
16	100°	82°	70°	130°	118°
18	100°	82°	70°	130°	118°
20	100°	82°	70°	130°	118°
22	100°	85°	74°	126°	115°
24	100°	85°	74°	126°	115°

1. Connector Type	2. Service Class	3. Shell Size-Insert Arrg.	4. Contact Type	5. Alternate Position	6. Special Variations
					( )

6. SELECT A STRAIN RELIEF OPTION OR FINISH VARIATION SUFFIX

Strain Relief Options: "SR" designates a strain relief clamp. Strain reliefs are available only on Service Class "A", "C" and "RE" (see step 2. Service Class) Finish Variation Suffix: See finish variations available in table to your right.

6. STRAIN RELIEF OR FINISHES

Finish	Military Finish Data	Finish Suffix	Finish Plus "SR" Suffix
AP-93 Tri-Nickel Alloy, Aluminum, 1000 Hr., 200°C, -65dB@100Hz*		(075)	
Cadmium plated nickel base 175°C	A		(SR)
Olive drab cadmium plate nickel base 175°C	B	(014)	(386)
Electroless nickel 200°C	F	(023)	(424)
Electroless nickel, space compatible 200°C		(453)	(467)
Anodic coating (Alumilite) 200°C	C	(005)	(300)
Chromate treated (Iridite 14-2) 125°C		(011)	(344)
Passivated steel 200°C	E	-	-
Nickel-PTFE 175°C		(045)	(582)
Zinc-Nickel Plated 175°C		(033)	
HERMETIC FINISHES			
Carbon steel shell tin plated & contacts	D	(468)	
Stainless steel shell passivated	N	(162)	
Stainless steel nickel plated	N	()	

Wall Mounting Receptacle - Crimp

Military (MS27472 & MS27479), Commercial (JT00, JTS00 & JTN00) (SR)

PART NUMBER BUILDER Page 86-90

MILITARY
MS27472E
MS27472P
MS27472T
MS27479E
MS27479T

Commercial
JT00RT, JT00RE, JT00RP
JTS00RT, JTS00RE, JTS00RP
JTN00RT, JTN00RE, JTN00RP

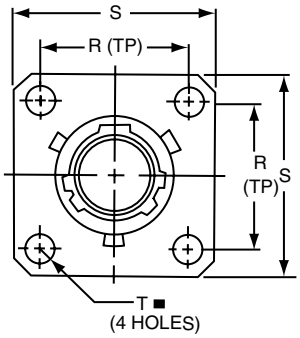

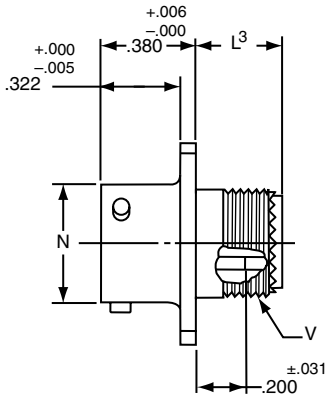

Commercial	Military
* JT00RT-XX-XXX	MS27472T
** JTS00RT-XX-XXX	MS27479T
*** JTN00RT-XX-XXX	

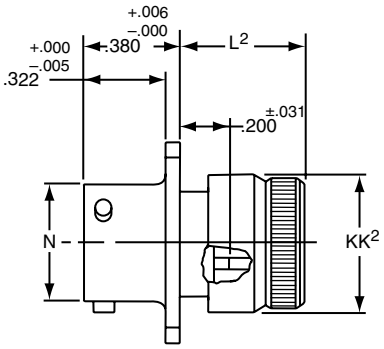

Commercial	Military
* JT00RE-XX-XXX	MS27472E
** JTS00RE-XX-XXX	MS27479E
*** JTN00RE-XX-XXX	

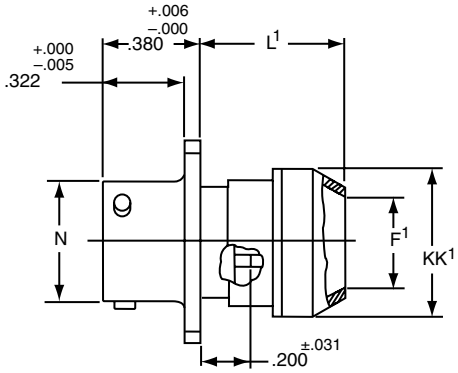

Commercial	Military
* JT00RP-XX-XXX	MS27472P
** JTS00RP-XX-XXX	
*** JTN00RP-XX-XXX	

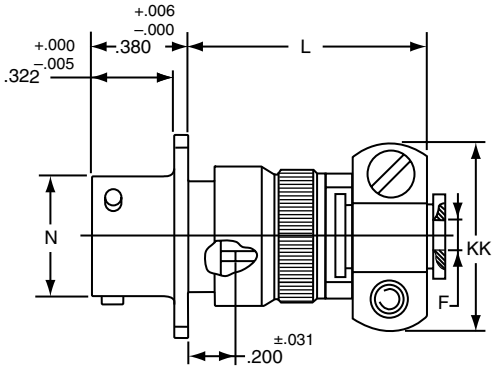

Commercial
* JT00RE-XX-XXX (SR)
** JTS00RE-XX-XXX (SR)
*** JTN00RE-XX-XXX (SR)

■ ⊕ .005 DIA Ⓜ

* Standard Junior Tri-Lock
** High temperature version
*** Clear iridite finish (gold color), N_2O_4 resistant

Shell Size	F Dia. +.010 –.025	F[1] Dia. ±.010	L Max.	L[1] Max.	L[2] Max.	L[3] Max.	N +.001 –.005	R (TP)	S ±.016	T ±.005	V Thread UNEF Class 2A (Plated)	KK Max.	KK[1] Dia. Max.	KK[2] Dia. Max.
8	.125	.444	1.094	.609	.547	.500	.473	.594	.812	.120	.4375-28	.812	.625	.578
10	.188	.558	1.094	.609	.547	.500	.590	.719	.938	.120	.5625-24	.875	.750	.703
12	.312	.683	1.094	.609	.547	.500	.750	.812	1.031	.120	.6875-24	1.000	.875	.828
14	.375	.808	1.344	.609	.547	.500	.875	.906	1.125	.120	.8125-20	1.125	1.000	.953
16	.500	.909	1.344	.609	.547	.500	1.000	.969	1.219	.120	.9375-20	1.188	1.125	1.078
18	.625	1.034	1.344	.609	.547	.500	1.125	1.062	1.312	.120	1.0625-18	1.438	1.250	1.203
20	.625	1.159	1.344	.609	.547	.500	1.250	1.156	1.438	.120	1.1875-18	1.438	1.375	1.328
22	.750	1.284	1.469	.609	.547	.500	1.375	1.250	1.562	.120	1.3125-18	1.625	1.500	1.453
24	.800	1.409	1.469	.688	.547	.500	1.500	1.375	1.688	.147	1.4375-18	1.719	1.625	1.578

All dimensions for reference only.

Wall Mounting Receptacle (Back Panel) - Crimp

Military (MS27497), Commercial (JTPQ00 & JTPSQ00)

PART NUMBER BUILDER Page 86-90

MILITARY
MS27497E
MS27497P
MS27497T

Commercial
JTPQ00RE, JTPQ00RP, JTPQ00RT
JTPSQ00RT

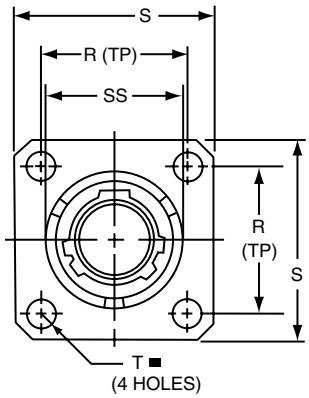

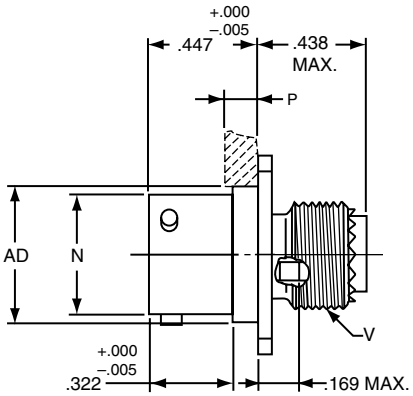

	Commercial	Military
*	JTPQ00RT-XX-XXX	MS27497T
**	JTPSQ00RT-XX-XXX	

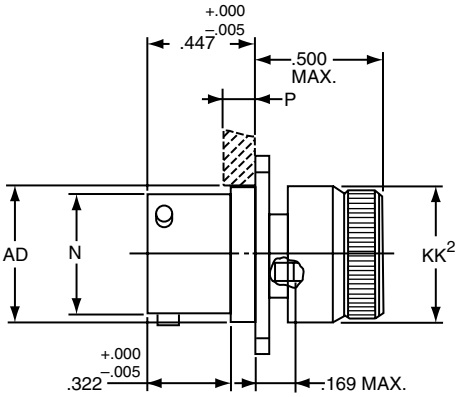

	Commercial	Military
*	JTPQ00RE-XX-XXX	MS27497E

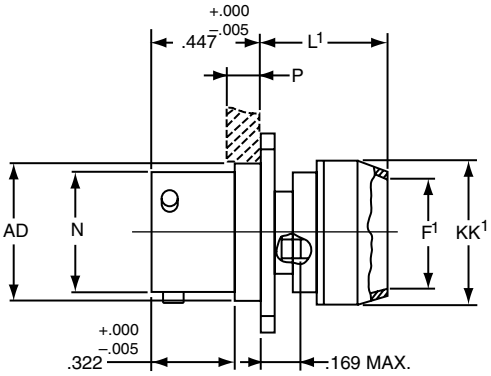

	Commercial	Military
*	JTPQ00RP-XX-XXX	MS27497P

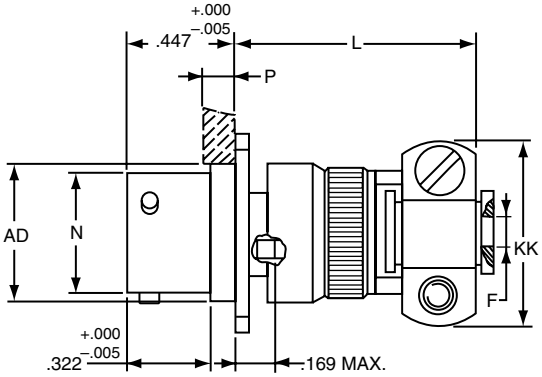

	Commercial
*	JTPQ00RE-XX-XXX (SR)

■ ⊕ .005 DIA Ⓜ

* Standard Junior Tri-Lock
** High temperature version

Shell Size	F Dia. +.010 –.025	F1 Dia. ±.010	L Max.	L1 Max.	N +.001 –.005	P Max. Panel Thickness	R (TP)	S ±.016	T ±.005	V Thread UNEF Class 2A (Plated)	AD Dia. ±.005	KK Max.	KK1 Dia. Max.	KK2 Dia. Max.	SS Dia. +.000 –.016
8	.125	.444	1.140	.468	.473	.142	.594	.812	.120	.4375-28	.516	.781	.625	.578	.563
10	.188	.558	1.140	.468	.590	.142	.719	.938	.120	.5625-24	.633	.844	.750	.703	.680
12	.312	.683	1.140	.468	.750	.142	.812	1.031	.120	.6875-24	.802	.969	.875	.828	.859
14	.375	.808	1.375	.468	.875	.142	.906	1.125	.120	.8125-20	.927	1.094	1.000	.953	.984
16	.500	.909	1.375	.468	1.000	.142	.969	1.219	.120	.9375-20	1.052	1.154	1.125	1.078	1.108
18	.625	1.034	1.375	.468	1.125	.142	1.062	1.312	.120	1.0625-18	1.177	1.406	1.250	1.203	1.233
20	.625	1.159	1.375	.468	1.250	.142	1.156	1.438	.120	1.1875-18	1.302	1.406	1.375	1.328	1.358
22	.750	1.284	1.516	.468	1.375	.142	1.250	1.562	.120	1.3125-18	1.427	1.594	1.500	1.453	1.483
24	.800	1.409	1.500	.540	1.500	.142	1.375	1.688	.147	1.4375-18	1.552	1.688	1.625	1.578	1.610

Line Receptacle - Crimp

Commercial (JT01, JTS01 & JTN01)

PART NUMBER BUILDER Page 86-90

Commercial

JT01RE, JT01RP, JT01RT
JTS01RE, JTS01RP, JTS01RT
JTN01RE, JTN01RP, JTN01RT

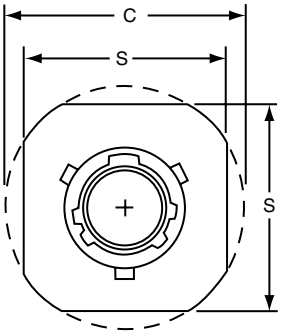

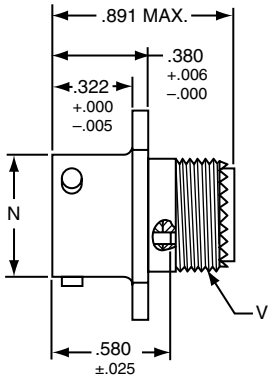

Commercial
* **JT01RT-XX-XXX**
** **JTS01RT-XX-XXX**
*** **JTN01RT-XX-XXX**

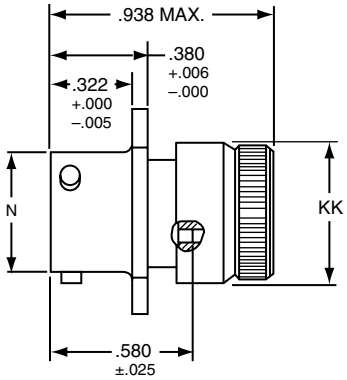

Commercial
* **JT01RE-XX-XXX**
** **JTS01RE-XX-XXX**
*** **JTN01RE-XX-XXX**

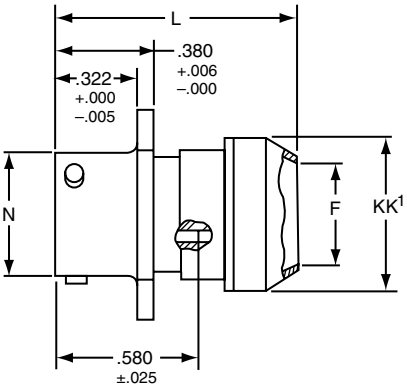

Commercial
* **JT01RP-XX-XXX**
** **JTS01RP-XX-XXX**
*** **JTN01RP-XX-XXX**

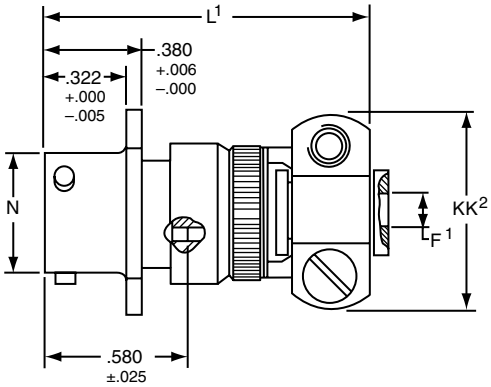

Commercial
* **JT01RE-XX-XXX (SR)**
** **JTS01RE-XX-XXX (SR)**
*** **JTN01RE-XX-XXX (SR)**

* Standard Junior Tri-Lock
** High temperature version
*** Clear iridite finish (gold color), N_2O_4 resistant

Shell Size	C Max.	F Dia. +.010	F[1] Dia. +.010 –.025	L Max.	L[1] Max.	N Dia. +.001 –.005	S +.017 –.016	V Thread UNEF Class 2A (Plated)	KK Dia. Max.	KK[1] Dia. Max.	KK[2] Max.
8	.965	.444	.125	1.031	1.562	.473	.812	.4375-28	.578	.625	.812
10	1.089	.558	.188	1.031	1.562	.590	.938	.5625-24	.703	.750	.875
12	1.183	.683	.312	1.031	1.562	.750	1.031	.6875-24	.828	.875	1.000
14	1.277	.808	.375	1.031	1.812	.875	1.125	.8125-20	.953	1.000	1.125
16	1.371	.909	.500	1.031	1.812	1.000	1.219	.9375-20	1.078	1.125	1.188
18	1.465	1.034	.625	1.031	1.812	1.125	1.312	1.0625-18	1.203	1.250	1.438
20	1.589	1.159	.625	1.031	1.812	1.250	1.438	1.1875-18	1.328	1.375	1.438
22	1.715	1.284	.750	1.031	1.938	1.375	1.562	1.3125-18	1.453	1.500	1.625
24	1.838	1.409	.800	1.109	1.938	1.500	1.688	1.4375-18	1.578	1.625	1.719

All dimensions for reference only.

Box Mounting Receptacle - Crimp

Military (MS27499 & MS27513), Commercial (JT02) (053)

PART NUMBER BUILDER Page 86-90

MILITARY
MS27499E
MS27513E

Commercial
JT02RE
JTS02RE
JTN02RE

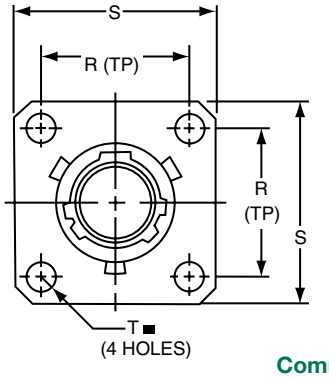

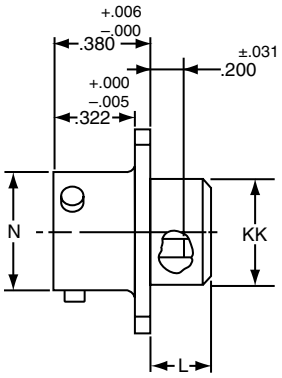

Commercial
* **JT02RE-XX-XXX**
** **JTS02RE-XX-XXX**
*** **JTN02RE-XX-XXX**

Military
MS27499E

Commercial- With Grommet
* **JT02RE-XX-XXX (053)**
** **JTS02RE-XX-XXX (053)**
*** **JTN02RE-XX-XXX (053)**

Military- With Grommet
MS27513E

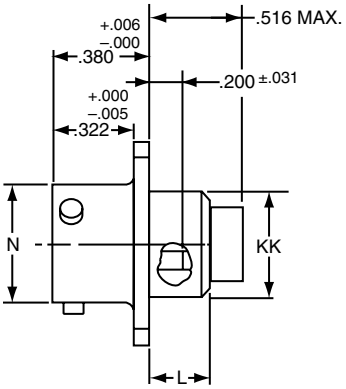

■ ⊕ .005 DIA Ⓜ

* Standard Junior Tri-Lock
** High temperature version
*** Clear iridite finish (gold color), N_2O_4 resistant

Shell Size	L Max.	N +.001 –.005	R (TP)	S ±.016	T Dia. ±.005	KK Dia. Max.
8	.286	.473	.594	.812	.120	.438
10	.286	.590	.719	.938	.120	.563
12	.286	.750	.812	1.031	.120	.688
14	.286	.875	.906	1.125	.120	.813
16	.286	1.000	.969	1.219	.120	.938
18	.286	1.125	1.062	1.312	.120	1.047
20	.286	1.250	1.156	1.438	.120	1.172
22	.286	1.375	1.250	1.562	.120	1.297
24	.286	1.500	1.375	1.688	.147	1.422

All dimensions for reference only.
NOTE: For applications requiring an environmental seal, please refer to JT00R, page 92.

Box Mounting Receptacle (Back Panel Mounting)

Military (MS27508), Commercial (JTP02, JTPS02 & JTPN02)

PART NUMBER BUILDER Page 86-90

MILITARY
MS27508E

Commercial
JTP02RE
JTPS02RE
JTPN02RE

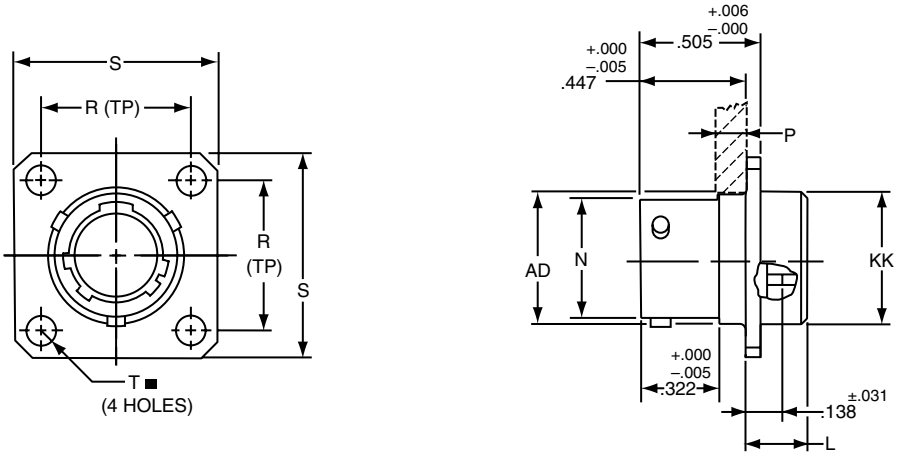

	Commercial	Military
*	JTP02RE-XX-XXX	MS27508E
**	JTPS02RE-XX-XXX	
***	JTPN02RE-XX-XXX	

■ ⊕ .005 DIA Ⓜ

* Standard Junior Tri-Lock
** High temperature version
*** Clear iridite finish (gold color), N_2O_4 resistant

Shell Size	L Max.	N +.001 –.005	P Max. Panel Thickness	R (TP)	S ±.016	T Dia. ±.005	AD Dia. ±.005	KK Dia. Max.
8	.225	.473	.147	.594	.812	.120	.516	.531
10	.225	.590	.152	.719	.938	.120	.633	.656
12	.225	.750	.152	.812	1.031	.120	.802	.828
14	.225	.875	.152	.906	1.125	.120	.927	.953
16	.225	1.000	.152	.969	1.219	.120	1.052	1.078
18	.225	1.125	.152	1.062	1.312	.120	1.177	1.203
20	.225	1.250	.179	1.156	1.438	.120	1.302	1.328
22	.225	1.375	.179	1.250	1.562	.120	1.427	1.453
24	.225	1.500	.169	1.375	1.688	.147	1.552	1.578

Jam Nut Receptacle

Military (MS27474), Commercial (JT07, JTS07 & JTN07) (SR)

PART NUMBER BUILDER Page 86-90

MILITARY
MS27474E
MS27474P
MS27474T

Commercial
JT07RE, JT07RP, JT07RT
JTS07RE, JTS07RP, JT0S7RT
JTN07RE, JTN07RP, JTN07RT

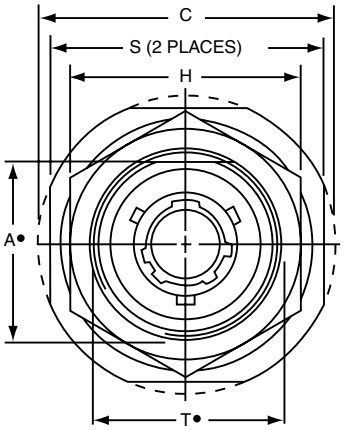

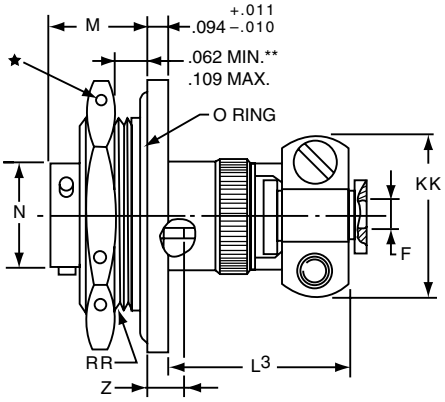

Commercial
*** JT07RE-XX-XXX (SR)**
***** JTS07RE-XX-XXX (SR)**
******JTN07RE-XX-XXX (SR)**

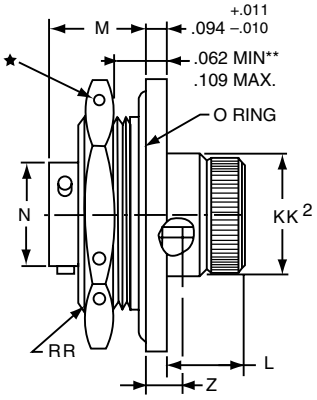

Commercial **Military**
*** JT07RE-XX-XXX** **MS27474E**
***** JTS07RE-XX-XXX**
******JTN07RE-XX-XXX**

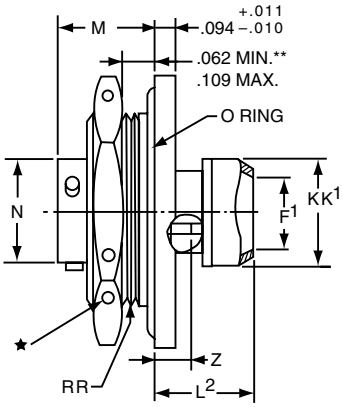

Commercial **Military**
*** JT07RP-XX-XXX** **MS27474P**
***** JTS07RP-XX-XXX**
******JTN07RP-XX-XXX**

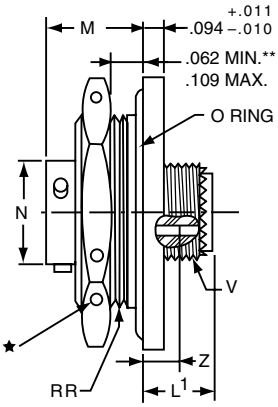

Commercial **Military**
*** JT07RT-XX-XXX** **MS27474T**
***** JTS07RT-XX-XXX**
******JTN07RT-XX-XXX**

★ .059 Dia. Min. 3 lockwire holes.
Formed lockwire hole design (6 holes) is optional.
\+ "D" shaped mounting hole dimensions.
* Standard Junior Tri-Lock
** Panel Thickness
*** High temperature version
**** Clear iridite finish (gold color), N_2O_4 resistant

Shell Size	A+ +.000 –.010	C Max.	F Dia. +.010 –.025	F¹ Dia.	H Hex +.017 –.016	L Max.	L¹ Max.	L² Max.	L³ Max.	M ±.005	N Dia. +.001 –.005	S ±.016	T+ +.010 –.000	V Thread UNEF Class 2A	Z ±.031	KK Max.	KK¹ Dia. Max.	KK² Max.	RR Thread (Plated) Class 2A
8	.830	1.390	.125	.444	1.062	.484	.453	.563	1.047	.438	.473	1.250	.884	.4375-28	.144	.812	.625	.578	.8750-20UNEF
10	.955	1.515	.188	.558	1.188	.484	.453	.563	1.047	.438	.590	1.375	1.007	.5625-24	.144	.875	.750	.703	1.0000-20UNEF
12	1.084	1.640	.312	.683	1.312	.484	.453	.563	1.047	.438	.750	1.500	1.134	.6875-24	.144	1.000	.875	.828	1.1250-18UNEF
14	1.208	1.765	.375	.808	1.438	.484	.453	.563	1.297	.438	.875	1.625	1.259	.8125-20	.144	1.125	1.000	.953	1.2500-18UNEF
16	1.333	1.953	.500	.909	1.562	.484	.453	.563	1.297	.438	1.000	1.781	1.384	.9375-20	.144	1.188	1.125	1.078	1.3750-18UNEF
18	1.459	2.031	.625	1.034	1.688	.484	.453	.563	1.297	.438	1.125	1.890	1.507	1.0625-18	.144	1.438	1.250	1.203	1.5000-18UNEF
20	1.576	2.156	.625	1.159	1.812	.453	.422	.531	1.266	.464	1.250	2.016	1.634	1.1875-18	.188	1.438	1.375	1.328	1.6250-18UNEF
22	1.701	2.280	.750	1.284	2.000	.453	.422	.531	1.391	.464	1.375	2.140	1.759	1.3125-18	.188	1.625	1.500	1.453	1.7500-18UNS
24	1.826	2.405	.800	1.409	2.125	.375	.422	.609	1.391	.464	1.500	2.265	1.884	1.4375-18	.188	1.719	1.625	1.578	1.8750-16UN

All dimensions for reference only.

Jam Nut Receptacle - Crimp

Commercial (JTL07, JTLS07 & JTLN07) (SR)

PART NUMBER BUILDER Page 86-90

Commercial

JTL07RE, JTL07RP
JTLS07RE, JT0S7RP
JTLN07RE

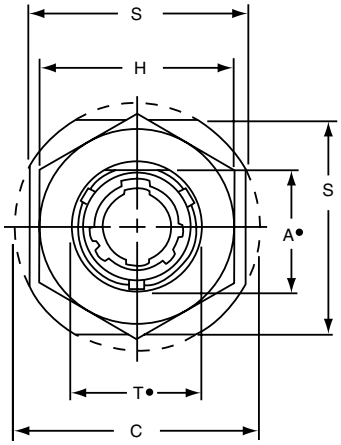

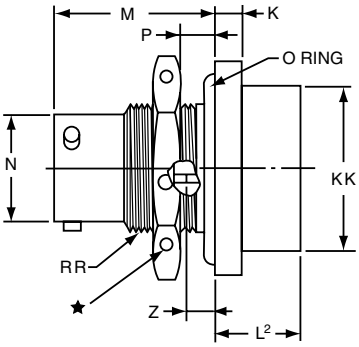

Commercial

* **JTL07RP-XX-XXX**
*** **JTLS07RP-XX-XXX**
**** **JTLN07RP-XX-XXX**

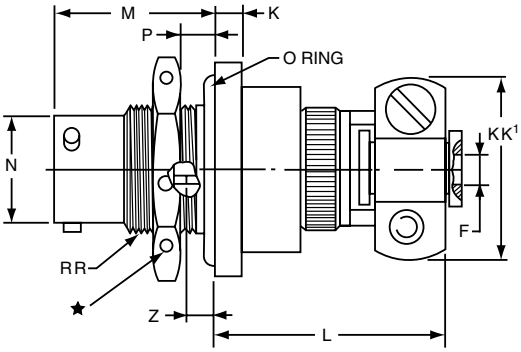

Commercial

* **JTL07RE-XX-XXX (SR)**
*** **JTLS07RE-XX-XXX (SR)**
**** **JTLN07RE-XX-XXX (SR)**

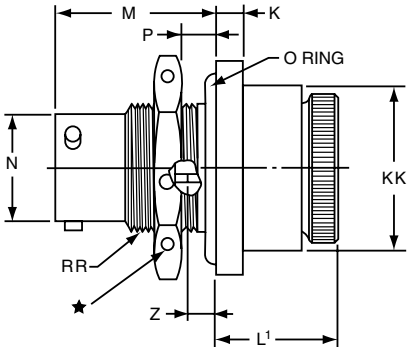

Commercial

* **JTL07RE-XX-XXX**
*** **JTLS07RE-XX-XXX**
**** **JTLN07RE-XX-XXX**

★ .059 Dia. Min. 3 lockwire holes. Formed lockwire hole design (6 holes) is optional.
\+ "D" shaped mounting hole dimensions.
* Miniature mounting dimensions
*** High temperature version
**** Clear iridite finish (gold color), N_2O_4 resistant

Shell Size	A+ +.000 –.010	C Max.	F Dia. +.010 –.025	H Hex +.017 –.016	K +.011 –.010	L Max.	L¹ Max.	L² Max.	M ±.005	N Dia. +.001 –.005	P Panel Thickness Min.	P Panel Thickness Max.	S ±.016	T+ +.010 –.000	Z ±.026	KK Dia. Max.	KK¹ Max.	RR Thread Class 2A
8	.542	1.077	.125	.750	.125	1.062	.641	.375	.630	.473	.062	.125	.938	.572	.047	.688	.812	.5625-24UNEF
10	.669	1.203	.188	.875	.125	1.062	.641	.375	.630	.590	.062	.125	1.062	.697	.047	.812	.875	.6875-24UNEF
12	.830	1.390	.312	1.062	.125	1.062	.641	.375	.630	.750	.062	.125	1.250	.844	.047	.938	1.000	.8750-20UNEF
14	.955	1.515	.375	1.188	.125	1.062	.641	.375	.630	.875	.062	.125	1.375	1.007	.047	1.062	1.125	1.0000-20UNEF
16	1.084	1.640	.500	1.312	.125	1.062	.641	.375	.630	1.000	.062	.125	1.500	1.134	.047	1.188	1.188	1.1250-18UNEF
18	1.208	1.765	.625	1.438	.125	1.062	.641	.375	.630	1.125	.062	.125	1.625	1.259	.047	1.312	1.438	1.2500-18UNEF
20	1.333	1.953	.625	1.562	.156	1.062	.703	.328	.755	1.250	.062	.250	1.812	1.384	.172	1.469	1.438	1.3750-18UNEF
22	1.459	2.075	.750	1.688	.156	1.062	.703	.328	.755	1.375	.062	.250	1.938	1.507	.172	1.594	1.625	1.5000-18UNEF
24	1.575	2.203	.800	1.812	.156	1.062	.703	.328	.755	1.500	.062	.250	2.062	1.634	.172	1.719	1.719	1.6250-18UNEF

All dimensions for reference only.

Straight Plug

Military (MS27473), Commercial (JT06, JTS06 & JTN06) (SR)

PART NUMBER BUILDER Page 86-90

MILITARY
MS27473E
MS27473P
MS27473T

Commercial
JT06RE, JT06RP, JT06RT
JTS06RE, JT0S6RP, JT0S6RT
JTN06RE, JTN06RP, JTN06RT

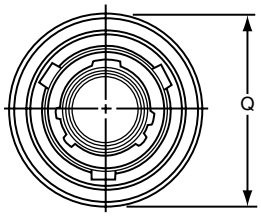

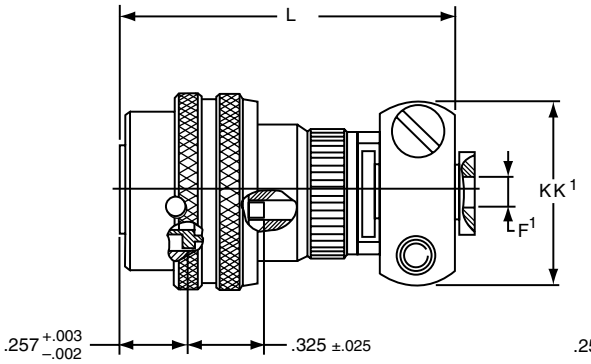

Commercial
* **JT06RE-XX-XXX (SR)**
** **JTS06RE-XX-XXX (SR)**
*** **JTN06RE-XX-XXX(SR)**

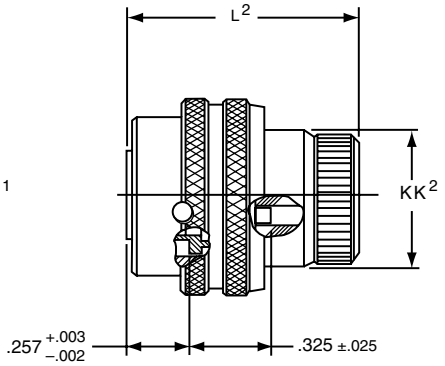

Commercial **Military**
* **JT06RE-XX-XXX** **MS27473E**
** **JTS06RE-XX-XXX**
*** **JTN06RE-XX-XXX**

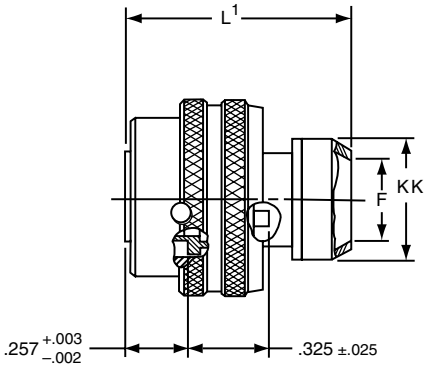

Commercial **Military**
* **JT06RP-XX-XXX** **MS27473P**
** **JTS06RP-XX-XXX**
*** **JTN06RP-XX-XXX**

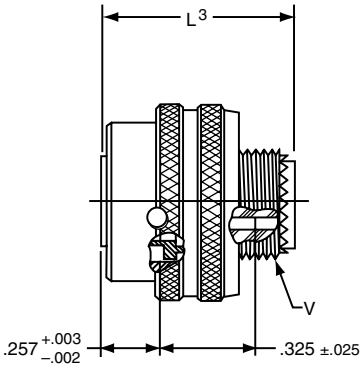

Commercial **Military**
* **JT06RT-XX-XXX** **MS27473T**
** **JTS06RT-XX-XXX**
*** **JTN06RT-XX-XXX**

* Standard Junior Tri-Lock
** High temperature version
***Clear iridite finish (gold color), N_2O_4 resistant

Shell Size	F Dia.	F[1] Dia. +.001 –.025	L Max.	L[1] Max.	L[2] Max.	L[3] Max.	Q Dia Max.	V Thread Modified Class 2A UNEF	V Thread Modified Modified Major Dia.	KK Dia. Max.	KK[1] Max.	KK[2] Dia. Max.
8	.444	.125	1.562	1.000	.938	.891	.734	.4375-28	.421 – .417	.625	.812	.578
10	.558	.188	1.562	1.000	.938	.891	.844	.5625-24	.542 – .538	.750	.875	.703
12	.683	.312	1.562	1.000	.938	.891	1.016	.6875-24	.667 – .663	.875	1.000	.828
14	.808	.375	1.812	1.000	.938	.891	1.141	.8125-20	.791 – .787	1.000	1.125	.953
16	.909	.500	1.812	1.000	.938	.891	1.265	.9375-20	.916 – .912	1.125	1.188	1.078
18	1.034	.625	1.812	1.000	.938	.891	1.391	1.0625-18	1.034 – 1.030	1.250	1.438	1.203
20	1.159	.625	1.812	1.000	.938	.891	1.500	1.1875-18	1.158 – 1.154	1.375	1.438	1.328
22	1.284	.750	1.938	1.000	.938	.891	1.625	1.3125-18	1.283 – 1.279	1.500	1.625	1.453
24	1.409	.800	1.938	1.062	.938	.891	1.750	1.4375-18	1.408 – 1.404	1.625	1.719	1.578

All dimensions for reference only.

Straight Plug (With Grounding Fingers) - Crimp

Military (MS27484), Commercial (JTG06 & JTNG06)

Amphenol Aerospace

PART NUMBER BUILDER Page 86-90

MILITARY
MS27484E
MS27484P
MS27484T

Commercial
JTG06RE, JTG06RP, JTG02RT
JTNG06RE, JTNG06RP, JTNG06RT

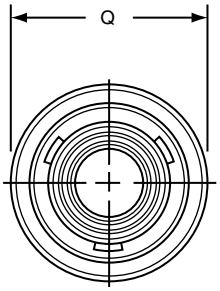

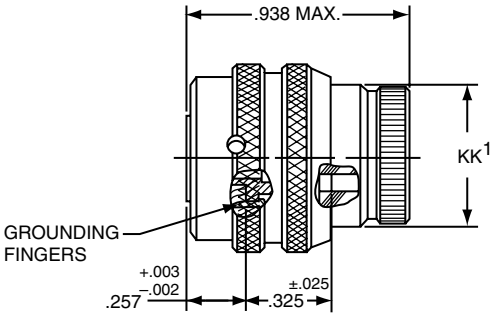

	Commercial	Military
*	JTG06RE-XX-XXX	MS27484E
**	JTNG06RE-XX-XXX	

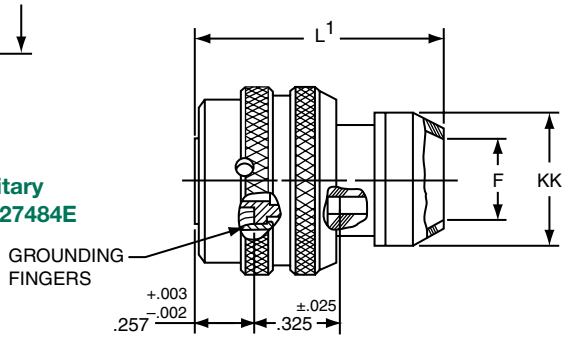

	Commercial	Military
*	JTG06RP-XX-XXX	MS27484P
**	JTNG06RP-XX-XXX	

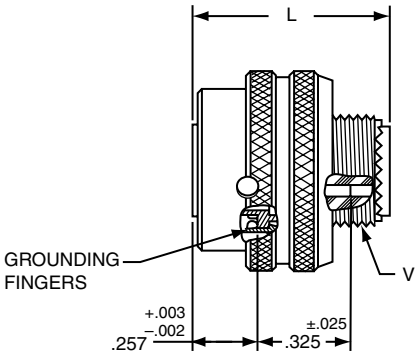

	Commercial	Military
*	JTG06RT-XX-XXX	MS27484T
**	JTNG06RT-XX-XXX	

* Plug with grounding fingers
** Clear iridite finish (gold color), N2O4 resistant

Shell Size	F Dia.	L Max.	L[1] Max.	Q Dia Max.	V Thread Modified		KK Dia. Max.	KK[1] Dia. Max.
					Class 2A UNEF	Modified Major Dia.		
8	.444	.891	1.000	.734	.4375-28	.421 – .417	.625	.578
10	.558	.891	1.000	.844	.5625-24	.542 – .538	.750	.703
12	.683	.891	1.000	1.016	.6875-24	.667 – .663	.875	.828
14	.808	.891	1.000	1.141	.8125-20	.791 – .787	1.000	.953
16	.909	.891	1.000	1.265	.9375-20	.916 – .912	1.125	1.078
18	1.034	.891	1.000	1.391	1.0625-18	1.034 – 1.030	1.250	1.203
20	1.159	.891	1.000	1.500	1.1875-18	1.158 – 1.154	1.375	1.328
22	1.284	.891	1.000	1.625	1.3125-18	1.283 – 1.279	1.500	1.453
24	1.409	.891	1.062	1.750	1.4375-18	1.408 – 1.404	1.625	1.578

All dimensions for reference only.

90° Plug - Crimp

Military (MS27500), Commercial (JT08R, JTS08 & JTN08)

PART NUMBER BUILDER Page 86-90

MILITARY
MS27500E

Commercial
JT08RE, JT08RP
JTS08RE, JT0S8RP
JTN08RE, JTN08RP

Commercial
- * JT08RP-XX-XXX
- ** JTS08RP-XX-XXX
- *** JTN08RP-XX-XXX

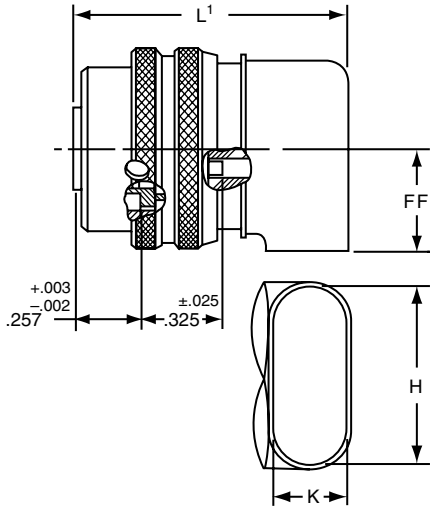

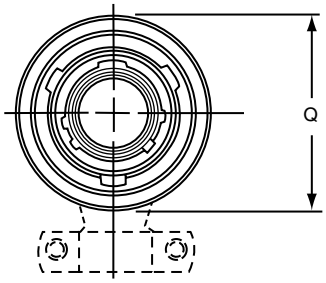

Commercial
- * JT08RE-XX-XXX
- ** JTS08RE-XX-XXX
- *** JTN08RE-XX-XXX

Military
MS27500E

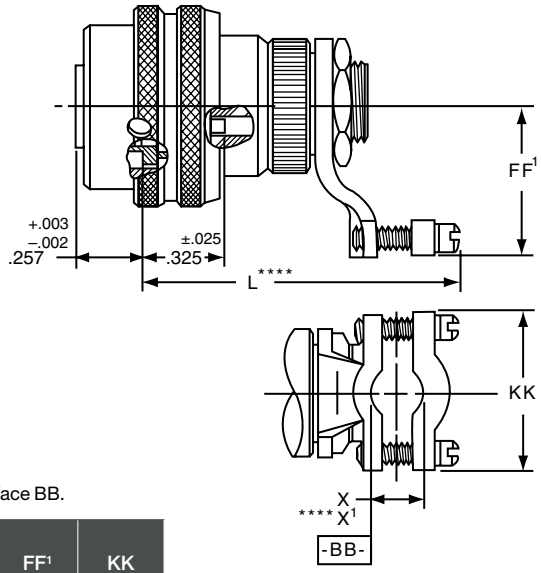

* Standard Junior Tri-Lock
** High temperature version
*** Clear iridite finish (gold color), N_2O_4 resistant
**** Dimensions L and X[1] are applicable when the end of the screw is flush with the surface BB.

Shell Size	H ±.010	K ±.010	L Max.	L[1] Max.	Q Dia. Max.	X Min. Cable	X[1] Max. Cable	FF Max.	FF[1] Max.	KK Max.
8	.547	.156	1.578	1.125	.734	.082	.234	.438	.984	.755
10	.709	.188	1.578	1.156	.844	.082	.234	.516	1.016	.755
12	.829	.281	1.656	1.250	1.016	.114	.328	.594	1.078	.817
14	1.000	.438	1.844	1.406	1.141	.176	.457	.656	1.203	.943
16	1.021	.500	2.000	1.469	1.265	.238	.634	.719	1.265	1.067
18	1.145	.562	2.046	1.531	1.391	.208	.614	.781	1.328	1.149
20	1.270	.625	2.125	1.594	1.500	.302	.608	.844	1.359	1.399
22	1.395	.688	2.250	1.656	1.625	.302	.823	.906	1.421	1.399
24	1.520	.750	2.422	1.797	1.750	.332	.853	.969	1.703	1.587

All dimensions for reference only.

Wall Mounting Receptacle -Hermetic

Military (MS27475 & MS27482), Commercial (JT00 & JTS00)

PART NUMBER BUILDER Page 86-90

MILITARY
MS27475Y
MS27482Y

Commercial
JT00H, JT00Y
JTS00Y

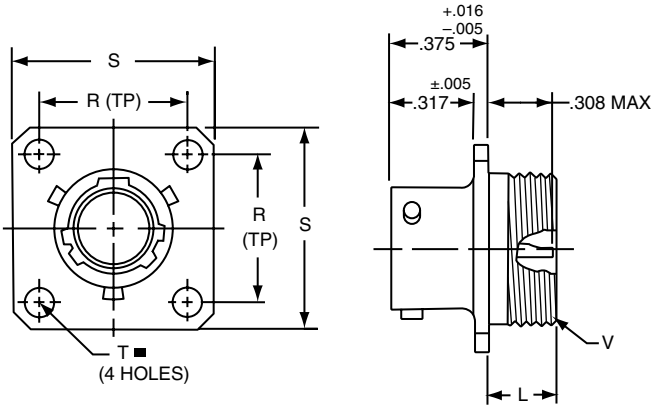

Shell Size	L Max.	N +.001 –.005	R (TP)	S ±.016	T ±.005	V Thread Class 2A
8	.234	.473	.594	.812	.120	.5625-24UNEF
10	.234	.590	.719	.938	.120	.6875-24UNEF
12	.234	.750	.812	1.031	.120	.8125-20UNEF
14	.234	.875	.906	1.125	.120	.9375-20UNEF
16	.234	1.000	.969	1.219	.120	1.0625-18UNEF
18	.234	1.125	1.062	1.312	.120	1.1875-18UNEF
20	.234	1.250	1.156	1.438	.120	1.3125-18UNEF
22	.234	1.375	1.250	1.562	.120	1.4375-18UNEF
24	.313	1.500	1.375	1.688	.147	1.5625-18UNEF

Commercial	Military
* JT00H-XX-XXX	
** JT00Y-XX-XXX	MS27475YXXDXXX
*** JTS00Y-XX-XXX	MS27482YXXEXXX

* Standard Junior Tri-Lock
** Interfacial seal wafer
*** High temperature version, interfacial seal wafer with stainless steel shell

Box Mounting Receptacle - Hermetic

Military (MS27476), Commercial (JT02 & JTS02)

PART NUMBER BUILDER Page 86-90

MILITARY
MS27476Y

Commercial
JT02H, JT02Y
JTS02Y

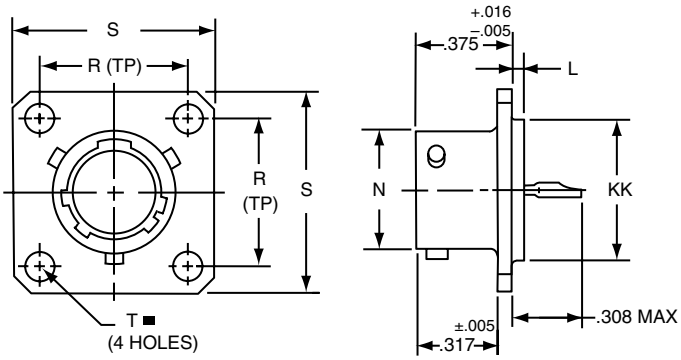

Shell Size	L +.006 –.015	N +.001 –.005	R (TP)	S ±.016	T ±.005	KK +.001 –.005
8	.051	.473	.594	.812	.120	.562
10	.051	.590	.719	.938	.120	.672
12	.051	.750	.812	1.031	.120	.781
14	.051	.875	.906	1.125	.120	.906
16	.051	1.000	.969	1.219	.120	1.031
18	.051	1.125	1.062	1.312	.120	1.156
20	.051	1.250	1.156	1.438	.120	1.250
22	.080	1.375	1.250	1.562	.120	1.375
24	.080	1.500	1.375	1.688	.147	1.500

All dimensions for reference only.

Commercial	Military
* JT02H-XX-XXX	
** JT02Y-XX-XXX	MS27476YXXDXXX
*** JTS02Y-XX-XXX	MS27476YXXEXXX

* Standard Junior Tri-Lock
** Interfacial seal wafer
*** High temperature version, interfacial seal wafer with stainless steel shell

Jam Nut Receptacle - Hermetic

Military (MS27477 & MS27483), Commercial (JT07 & JTS07)

PART NUMBER BUILDER Page 86-90

MILITARY
MS27477Y
MS27483Y

Commercial
JT07H, JT07Y
JTS07Y

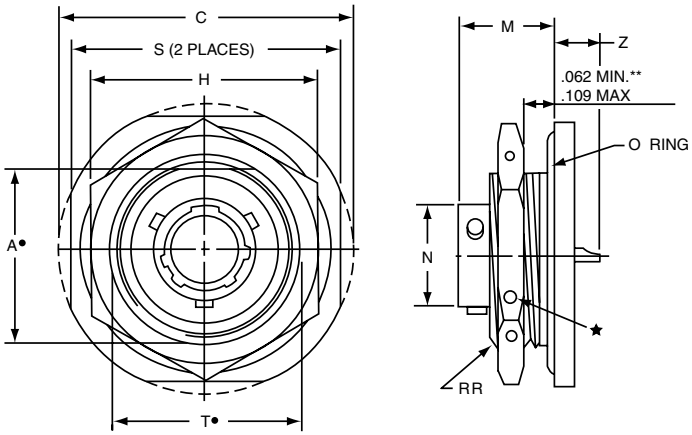

* Standard Junior Tri-Lock
★ .059 Dia. Min. 3 lockwire holes. Formed lockwire hole design (6 holes) is optional.
\+ "D" shaped mounting hole dimensions.
** Panel Thickness
*** Interfacial seal wafer
**** High temperature version, interfacial seal wafer with stainless steel shell

Commercial
*** JT07H-XX-XXX**
***** JT07Y-XX-XX**
******JTS07Y-XX-XXX**

Military
MS27477YXXDXXX
MS27483YXXEXXX

Shell Size	A+ +.000 −.010	C Max.	H +.017 −.016	M ±.005	N +.001 −.005	S ±.016	T+ +.010 −.000	Z Max.	RR Thread Class 2A
8	.830	1.390	1.062	.438	.473	1.250	.884	.244	.8750-20UNEF
10	.955	1.515	1.188	.438	.590	1.375	1.007	.244	1.0000-20UNEF
12	1.084	1.640	1.312	.438	.750	1.500	1.134	.244	1.1250-18UNEF
14	1.208	1.765	1.438	.438	.875	1.625	1.259	.244	1.2500-18UNEF
16	1.333	1.953	1.562	.438	1.000	1.781	1.384	.244	1.3750-18UNEF
18	1.459	2.031	1.688	.438	1.125	1.890	1.507	.244	1.5000-18UNEF
20	1.576	2.156	1.812	.464	1.250	2.016	1.634	.218	1.6250-18UNEF
22	1.701	2.280	2.000	.464	1.375	2.140	1.759	.218	1.7500-18UNS
24	1.826	2.405	2.125	.464	1.500	2.265	1.884	.218	1.8750-16UN

Solder Mounting Receptacle - Hermetic

Military (MS27478 & MS27503), Commercial (JTI & JTSI)

PART NUMBER BUILDER Page 86-90

MILITARY
MS27478Y
MS27503Y

Commercial
JTIH, JTIY
JTSIY

Commercial
*** JTIH-XX-XXX**
**** JTIY-XX-XX**
***** JTSIY-XX-XXX**

Military
MS27478YXXDXXX
MS27503YXXEXXX

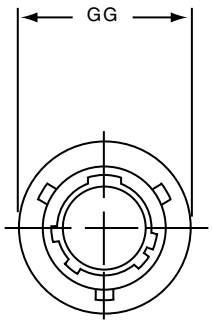

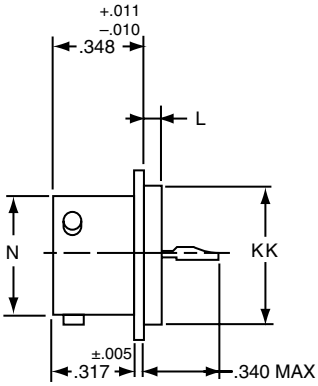

Shell Size	L +.011 −.010	N +.001 −.005	GG +.011 −.010	KK +.001 −.005
8	.078	.473	.687	.562
10	.078	.590	.797	.672
12	.078	.750	.906	.781
14	.078	.875	1.031	.906
16	.078	1.000	1.156	1.031
18	.078	1.125	1.281	1.156
20	.078	1.250	1.375	1.250
22	.107	1.375	1.500	1.375
24	.107	1.500	1.625	1.500

* Standard Junior Tri-Lock
** Interfacial seal wafer
*** High temperature version, interfacial seal wafer with stainless steel shell

All dimensions for reference only. Weld mounting hermetic receptacle also available. Consult Amphenol Aerospace for availability and dimensions.

Wall Mounting Receptacle - Solder

Military (MS27334), Commercial (JT00 & JTN00)

Military qualified to MIL-DTL-27599

PART NUMBER BUILDER Page 86-90

MILITARY
MS27334P
MS27334T

Commercial
JT00A, JT00C, JT00P
JTN00A, JTN00C, JTN00P

* Standard Junior Tri-Lock
NOTE: For availability of back panel mounting types, consult Amphenol Aerospace.

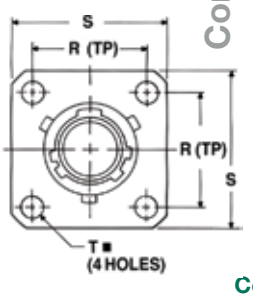

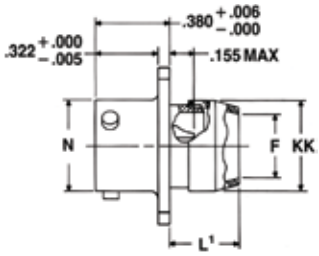

Commercial
*JT00P-XX-XXX
*JTN00P-XX-XXX

Military
MS27334P

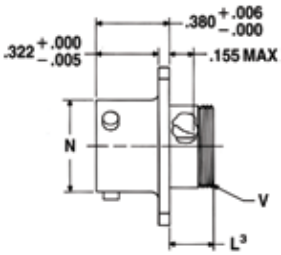

Commercial
*JT00A-XX-XXX
*JT00C-XX-XXX
*JTN00A-XX-XXX
*JTN00C-XX-XXX

Military
MS27334T

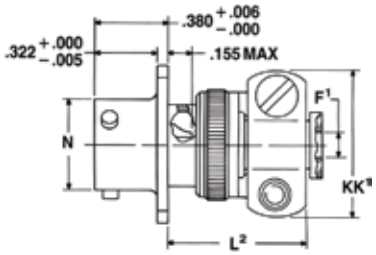

Commercial
*JT00A-XX-XXX(SR)
*JTN00A-XX-XXX(SR)
*JTN00C-XX-XXX(SR)

■ ⊕ .005 DIA Ⓜ

Shell Size	F Dia. Min.	F¹ +.010 −.025	L¹ Max.	LMax.	L³ Max.	N +.001 −.005	R (TP)	S ±.016	T ±.005	V Thread Modified Size Class 2A	V Thread Modified Modified Major Dia.	KK Dia. Max.	KK¹ Max.
8	.312	.125	.422	.734	.234	.473	.594	.812	.120	.4375-28UNEF	.421 - .417	.500	.812
10	.429	.188	.422	.734	.234	.590	.719	.938	.120	.5625-24UNEF	.542 - .538	.625	.875
12	.543	.312	.422	.734	.234	.750	.812	1.031	.120	.6875-24UNEF	.667 - .663	.750	1.000
14	.668	.375	.422	.797	.234	.875	.906	1.125	.120	.8125-20UNEF	.791 - .787	.875	1.125
16	.793	.500	.422	.797	.234	1.000	.969	1.219	.120	.9375-20UNEF	.916 - .912	1.000	1.188
18	.894	.625	.422	.797	.234	1.125	1.062	1.312	.120	1.0625-18UNEF	1.034 - 1.030	1.109	1.438
20	1.019	.625	.422	.859	.234	1.250	1.156	1.438	.120	1.1875-18UNEF	1.158 - 1.154	1.234	1.438
22	1.144	.750	.422	.859	.234	1.375	1.250	1.562	.120	1.3125-18UNEF	1.283 - 1.279	1.359	1.625
24	1.269	.800	.422	.922	.313	1.500	1.375	1.688	.147	1.4375-18UNEF	1.408 - 1.404	1.484	1.719

Box Mounting Receptacle - Solder

Military (MS27335), Commercial (JT02 & JTN02)

Military qualified to MIL-DTL-27599

PART NUMBER BUILDER Page 86-90

MILITARY
MS27335T

Commercial
JT02A, JT02C, JT02P
JTN02A, JTN02C, JTN02P

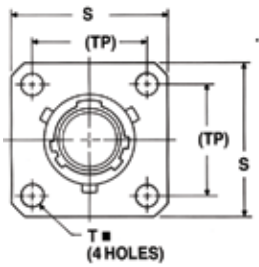

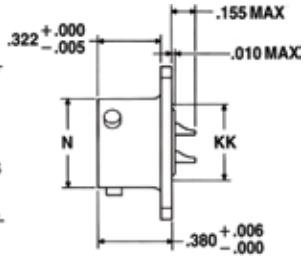

* Standard Junior Tri-Lock
NOTE: For availability of back panel mounting types, consult Amphenol Aerospace.

■ ⊕ .005 DIA Ⓜ

Shell Size	N +.001 −.005	R (TP)	S ± .016	T ± .005	KK Max.
8	.473	.594	.812	.120	.391
10	.590	.719	.938	.120	.508
12	.750	.812	1.031	.120	.622
14	.875	.906	1.125	.120	.749
16	1.000	.969	1.219	.120	.872
18	1.125	1.062	1.312	.120	.976
20	1.250	1.156	1.438	.120	1.101
22	1.375	1.250	1.562	.120	1.226
24	1.500	1.375	1.688	.147	1.351

All dimensions for reference only.

Straight Plug - Solder

Military (MS27336), Commercial (JT06 & JTN06)

Military qualified to MIL-DTL-27599

PART NUMBER BUILDER Page 86-90

MILITARY
MS27336P
MS27336T

Commercial
JT06A, JT06P
JTN06A, JTN06P

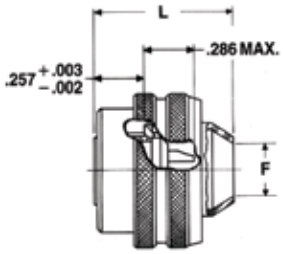

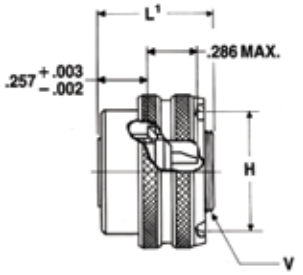

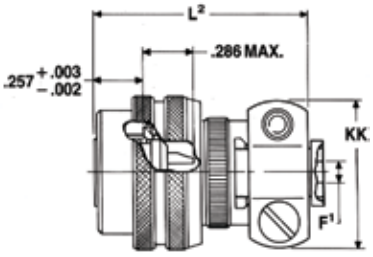

*Standard Junior Tri-Lock

Commercial
***JT06P-XX-XXX**
***JTN06P-XX-XXX**

Military
MS27336P

Commercial
***JT06A-XX-XXX**
***JTN06A-XX-XXX**

Military
MS27336T

Commercial
***JT06A-XX-XXX(SR)**
***JTN06A-XX-XXX(SR)**

Shell Size	F Min.	F+.010 −.025	H +.010 −.001	L Max.	LMax.	LMax.	Q Max.	V Thread Modified		KK Max.
								Size Class 2A	Modified Major Dia.	
8	.312	.125	.635	.812	.625	1.109	.734	.4375-28UNEF	.421 - .417	.812
10	.429	.188	.734	.812	.625	1.109	.844	.5625-24UNEF	.542 - .538	.875
12	.543	.312	.870	.812	.625	1.109	1.016	.6875-24UNEF	.667 - .663	1.000
14	.668	.375	.996	.812	.625	1.172	1.141	.8125-20UNEF	.791 - .787	1.125
16	.793	.500	1.122	.828	.625	1.172	1.265	.9375-20UNEF	.916 - .912	1.188
18	.894	.625	1.246	.828	.625	1.172	1.391	1.0625-18UNEF	1.034 - 1.030	1.438
20	1.019	.625	1.372	.828	.625	1.234	1.500	1.1875-18UNEF	1.158 - 1.154	1.438
22	1.144	.750	1.496	.828	.625	1.234	1.625	1.3125-18UNEF	1.283 - 1.279	1.625
24	1.269	.800	1.622	.906	.688	1.297	1.750	1.4375-18UNEF	1.408 - 1.404	1.719

Straight Plug (With Grounding Ring)

Commercial (JTG06 & JTNG06)

Military qualified to MIL-DTL-27599

PART NUMBER BUILDER Page 86-90

Commercial
JTG06A
JTNG06A

Commercial
***JTG06A-XX-XXX**
****JTNG06A-XX-XXX**

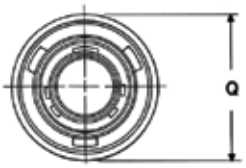

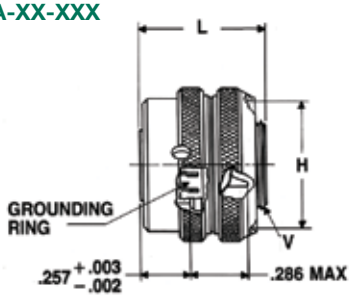

* Plug with grounding fingers
** Coupling nut is clear iridite finish (gold color), shell and grounding fingers are gold plated N2O4 resistant.

Shell Size	H Dia. +.010 −.001	L Max.	Q Dia. Max.	V Thread Modified	
				Size Class 2A	Modified Major Dia.
8	.635	.625	.734	.4375-28UNEF	.421 - .417
10	.734	.625	.844	.5625-24UNEF	.542 - .538
12	.870	.625	1.016	.6875-24UNEF	.667 - .663
14	.996	.625	1.141	.8125-20UNEF	.791 - .787
16	1.122	.625	1.265	.9375-20UNEF	.916 - .912
18	1.246	.625	1.391	1.0625-18UNEF	1.034 - 1.030
20	1.372	.625	1.500	1.1875-18UNEF	1.158 - 1.154
22	1.496	.625	1.625	1.3125-18UNEF	1.283 - 1.279
24	1.622	.688	1.750	1.4375-18UNEF	1.408 - 1.404

All dimensions for reference only.

Jam Mounting Receptacle - Solder

Military (MS27337), Commercial (JT07 & JTN07)

Military qualified to MIL-DTL-27599

PART NUMBER BUILDER Page 86-90

MILITARY
MS27337P

Commercial
JT07A, JT07C, JT07P
JTN07A, JTN07C, JTN07P

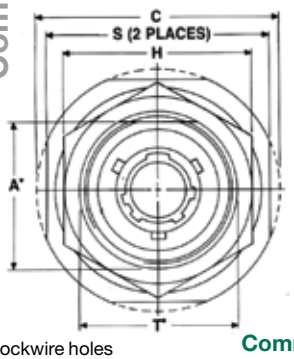

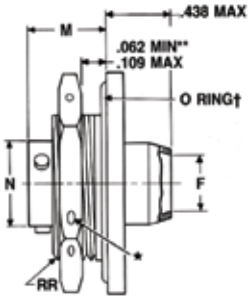

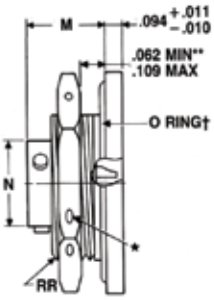

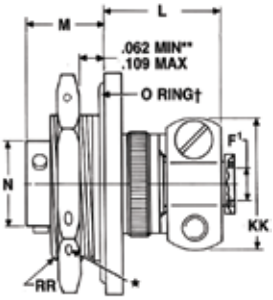

H .059 dia. min. 3 lockwire holes
+ "D" shaped mounting hole dimensions.
* Standard Junior Tri-Lock
** Panel thickness
† O Ring not furnished with MS27337

Commercial
***JT07P-XX-XXX**
***JTN07P-XX-XXX**

Military
MS27337P

Commercial
***JT07A-XX-XXX**
***JT07C-XX-XXX**
***JTN07A-XX-XXX**
***JTN07C-XX-XXX**

Commercial
***JT07A-XX-XXX(SR)**
***JTN07A-XX-XXX(SR)**
***JTN07C-XX-XXX(SR)**

Shell Size	A+ +.000 −.010	C Max.	F Min.	F+.010 −.025	H +.017 −.016	L Max.	M ±.005	N +.001 −.005	S ±.016	T+ +.010 −.000	KK Max.	RR Thread Class 2A
8	.830	1.390	.312	.125	1.062	.666	.438	.473	1.250	.884	.812	.8750-20UNEF
10	.955	1.515	.429	.188	1.188	.666	.438	.590	1.375	1.007	.875	1.0000-20UNEF
12	1.084	1.640	.543	.312	1.312	.666	.438	.750	1.500	1.134	1.000	1.1250-18UNEF
14	1.208	1.765	.668	.375	1.438	.729	.438	.875	1.625	1.259	1.125	1.2500-18UNEF
16	1.333	1.953	.793	.500	1.562	.729	.438	1.000	1.781	1.384	1.188	1.3750-18UNEF
18	1.459	2.031	.894	.625	1.688	.729	.438	1.125	1.890	1.507	1.438	1.5000-18UNEF
20	1.576	2.156	1.019	.625	1.812	.765	.464	1.250	2.016	1.634	1.438	1.6250-18UNEF
22	1.701	2.280	1.144	.750	2.000	.765	.464	1.375	2.140	1.759	1.625	1.7500-18UNS
24	1.826	2.405	1.269	.800	2.125	.828	.464	1.500	2.265	1.884	1.719	1.8750-16UN

90° Plug - Solder

Commercial (JT08 & JTN08)

Military qualified to MIL-DTL-27599

PART NUMBER BUILDER Page 86-90

Commercial
JT08P
JTN08P

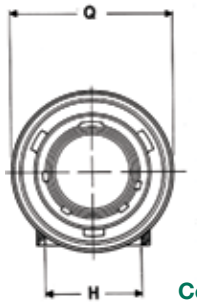

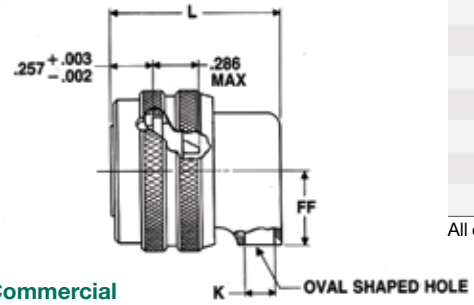

Commercial
***JT08P-XX-XXX**
***JTN08P-XX-XXX**

Shell Size	H Min.	K Min.	L Max.	Q Max.	FF Max.
8	.396	.126	.891	.734	.391
10	.532	.141	.906	.844	.438
12	.694	.173	.938	1.016	.516
14	.814	.266	1.031	1.141	.594
16	.985	.423	1.188	1.265	.656
18	1.006	.485	1.250	1.391	.719
20	1.130	.547	1.312	1.500	.781
22	1.255	.610	1.375	1.625	.844
24	1.380	.673	1.516	1.750	.906

All dimensions for reference only.

PCB Wall Mounting Receptacle

Commercial (JTPQ00R)

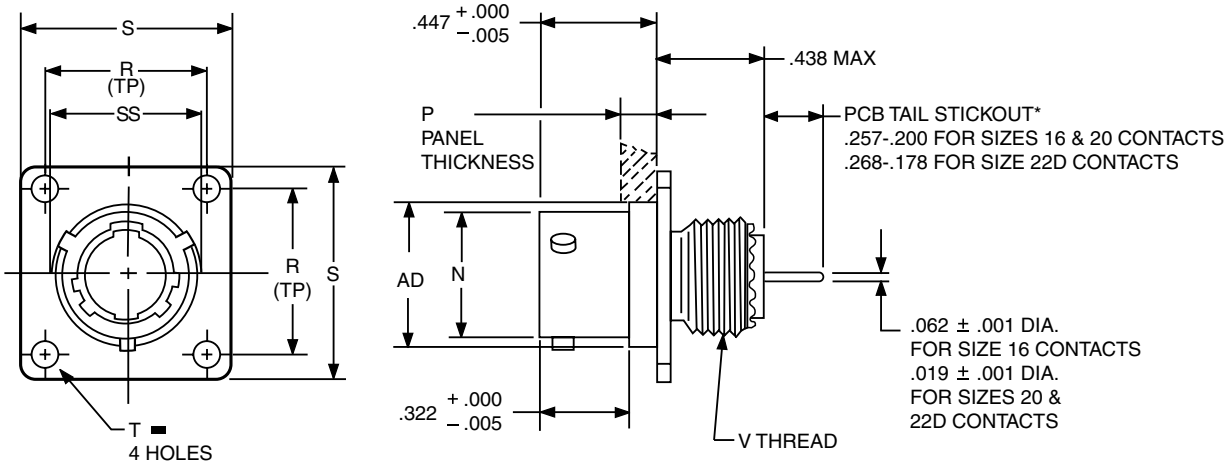

PART # See chart below	1. Shell Finish	2. Base Number	3. Coded Shell Size	4. Insert Arrg.	5. Contact Type/Alt. Keying
	88/91	569	73X	- 35	P

HOW TO ORDER

1. SELECT A SHELL FINISH:

88	Designates olive drab cadmium plated connector shell
91	Designates electroless nickel plated connector shell

Consult Amphenol Aerospace for ordering of composite styles.

2. BASE NUMBER:

569	Base Number

3. SELECT A CODED SHELL SIZE:

See chart below **731-739**, designates size 9-25 shell size.
Example: **731**= Size 9 Shell

4. SELECT AN INSERT ARRANGEMENT:

Refer to insert availability chart on page 2-5 and pin-out illustrations on pages 15-29.

-35	Designates Insert Arrangement Number

5. CONTACT TYPE/ALTERNATE KEYING POSITIONS:

Refer to page 90 for alternate rotation letters to use.

P	Designates Pin Contacts in Normal Position
S	Designates Socket Contacts in Normal Position

▬ ⊕ .005 DIA Ⓜ

Shell Size	Coded Shell Size	N +.001 −.005	P Max. Panel Thickness	R (TP)	S ±.016	T Dia. ±.005	V Thread Class 2A (Plated)	AD Dia. ±.005	SS Dia. +.000 −.016
8	**731**	.473	.142	.594	.812	.120	.4375-28 UNEF	.516	.563
10	**732**	.590	.142	.719	.938	.120	.5625-24 UNEF	.633	.680
12	**733**	.750	.142	.812	1.031	.120	.6875-24 UNEF	.802	.859
14	**734**	.875	.142	.906	1.125	.120	.8125-20 UNEF	.927	.984
16	**735**	1.000	.142	.969	1.219	.120	.9375-20 UNEF	1.052	1.108
18	**736**	1.125	.142	1.062	1.312	.120	1.0625-18 UNEF	1.177	1.233
20	**737**	1.250	.142	1.156	1.438	.120	1.1875-18 UNEF	1.302	1.358
22	**738**	1.375	.142	1.250	1.562	.120	1.3125-18 UNEF	1.427	1.483
24	**739**	1.500	.142	1.375	1.688	.147	1.4375-18 UNEF	1.552	1.610

All dimensions for reference only. Most common options are shown; other options are available.

PCB Box Mounting Receptacle (Back Panel Mounting)

Commercial (JTP02R)

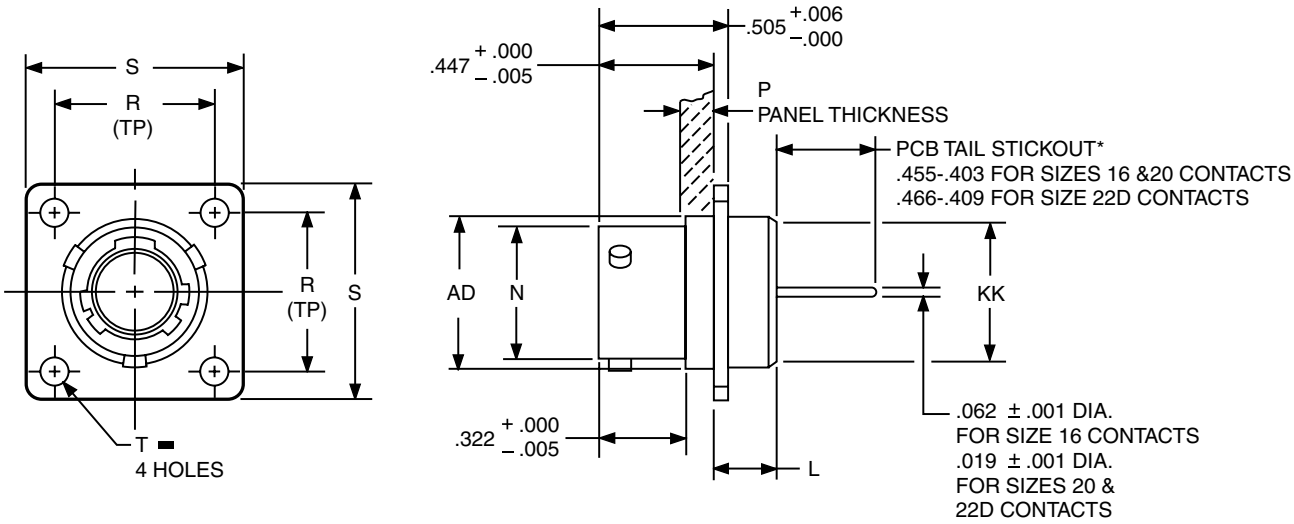

	1.	2.	3.	4.	5.
PART # See chart below	Shell Finish	Base Number	Coded Shell Size	Insert Arrg.	Contact Type/Alt. Keying
	88/91	569	74X	- 35	P

HOW TO ORDER

1. SELECT A SHELL FINISH:

88	Designates olive drab cadmium plated connector shell
91	Designates electroless nickel plated connector shell

Consult Amphenol Aerospace for ordering of composite styles.

2. BASE NUMBER:

569	Base Number

3. SELECT A CODED SHELL SIZE:

See chart below **741-749**, designates size 9-25 shell size.
Example: **741**= Size 9 Shell

4. SELECT AN INSERT ARRANGEMENT:

Refer to insert availability chart on page 2-5 and pin-out illustrations on pages 15-29.

-35	Designates Insert Arrangement Number

5. CONTACT TYPE/ALTERNATE KEYING POSITIONS:

Refer to page 90 for alternate rotation letters to use.

P	Designates Pin Contacts in Normal Position
S	Designates Socket Contacts in Normal Position

▬ ⊕ .005 DIA Ⓜ

Shell Size	Coded Shell Size	L Max.	N +.001 –.005	P Max. Panel Thickness	R (TP)	S ±.016	T Dia. ±.005	AD Dia. ±.005	KK Dia. Max.
8	**741**	.225	.473	.147	.594	.812	.120	.516	.531
10	**742**	.225	.590	.152	.719	.938	.120	.633	.656
12	**743**	.225	.750	.152	.812	1.031	.120	.802	.828
14	**744**	.225	.875	.152	.906	1.125	.120	.927	.953
16	**745**	.225	1.000	.152	.969	1.219	.120	1.052	1.078
18	**746**	.225	1.125	.152	1.062	1.312	.120	1.177	1.203
20	**747**	.225	1.250	.179	1.156	1.438	.120	1.302	1.328
22	**748**	.225	1.375	.179	1.250	1.562	.120	1.427	1.453
24	**749**	.225	1.500	.169	1.375	1.688	.147	1.552	1.578

All dimensions for reference only. Most common options are shown; other options are available

PCB Jam Nut Receptacle

Commercial (JT07)

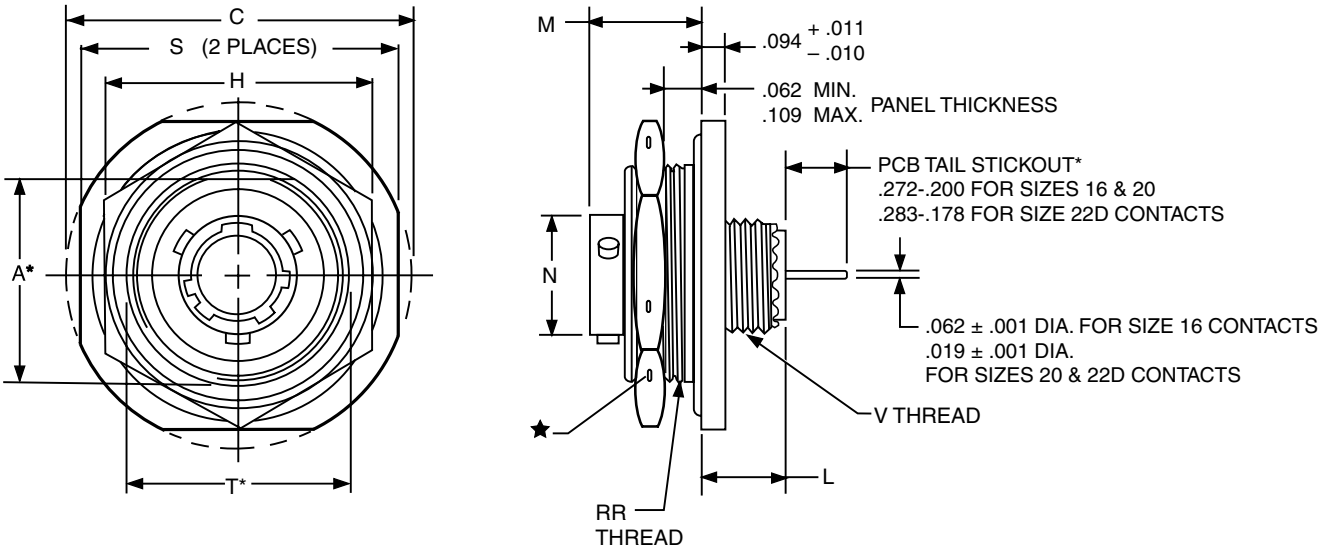

PART # See chart below	1. Shell Finish	2. Base Number	3. Coded Shell Size	4. Insert Arrg.	5. Contact Type/Alt. Keying
	88/91	569	75X	- 35	P

HOW TO ORDER

1. SELECT A SHELL FINISH:

88	Designates olive drab cadmium plated connector shell
91	Designates electroless nickel plated connector shell

Consult Amphenol Aerospace for ordering of composite styles.

2. BASE NUMBER:

569	Base Number

3. SELECT A CODED SHELL SIZE:

See chart below **751-759**, designates size 9-25 shell size.
Example: **751** = Size 9 Shell

4. SELECT AN INSERT ARRANGEMENT:

Refer to insert availability chart on page 2-5 and pin-out illustrations on pages 15-29.

-35	Designates Insert Arrangement Number

5. CONTACT TYPE/ALTERNATE KEYING POSITIONS:

Refer to page 90 for alternate rotation letters to use.

P	Designates Pin Contacts in Normal Position
S	Designates Socket Contacts in Normal Position

Shell Size	Coded Shell Size	A* +.000 –.010	C Max.	H Hex +.017 –.016	L Max.	M ±.005	N +.001 –.005	S ±.016	T* +.010 –.000	V Thread Class 2A (Plated)	RR Thread Class 2A (Plated)
8	**751**	.830	1.390	1.062	.453	.438	.473	1.250	.884	.4375-28 UNEF	.8750-20 UNEF
10	**752**	.955	1.515	1.188	.453	.438	.590	1.375	1.007	.5625-24 UNEF	1.0000-20 UNEF
12	**753**	1.084	1.640	1.312	.453	.438	.750	1.500	1.134	.6875-24 UNEF	1.1250-18 UNEF
14	**754**	1.208	1.765	1.438	.453	.438	.875	1.625	1.259	.8125-20 UNEF	1.2500-18 UNEF
16	**755**	1.333	1.953	1.562	.453	.438	1.000	1.781	1.384	.9375-20 UNEF	1.3750-18 UNEF
18	**756**	1.459	2.031	1.688	.453	.438	1.125	1.890	1.507	1.0625-18 UNEF	1.5000-18 UNEF
20	**757**	1.576	2.156	1.812	.422	.464	1.250	2.016	1.634	1.1875-18 UNEF	1.6250-18 UNEF
22	**758**	1.701	2.280	2.000	.422	.464	1.375	2.140	1.759	1.3125-18 UNEF	1.7500-18 UNS
24	**759**	1.826	2.405	2.125	.422	.464	1.500	2.265	1.884	1.4375-18 UNEF	1.8750-16 UN

All dimensions for reference only.
Most common options are shown; other options are available

★ .059 dia. min. 3 lockwire holes.
Formed lockwire hole design (6 holes) is optional.
* "D" shaped mounting hole dimensions

PCB Wall Mounting Receptacle Hermetic

Commercial (JT00)

Amphenol Aerospace

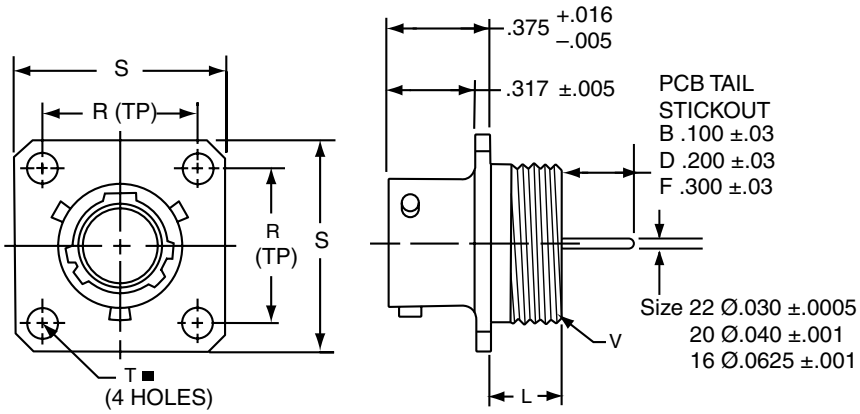

	1.	2.	3.	4.	5.	6.
PART # See chart below	Base Number	Coded Shell Size	Insert Arrg.	Contact Type/ Alt. Keying Position	Shell Finish	Tail Length
	10-626	43	-35	P	1	B

HOW TO ORDER

1. BASE NUMBER:

10-626	Base Number for MIL-DTL-38999 Series III Hermetic with PCB Tail

2. SELECT A CODED SHELL SIZE:

See chart below **431-439**, designates size 9-25 shell size.

3. SELECT AN INSERT ARRANGEMENT:

Refer to insert availability chart on page 2-5 and pin-out illustrations on pages 15-29.

-35	Designates Insert Arrangement Number

4. CONTACT TYPE/ALTERNATE KEYING POSITIONS:

Refer to page 90 for alternate rotation letters to use.

P	Designates Pin Contacts in Normal Position
S	Designates Socket Contacts in Normal Position

5. SELECT A SHELL FINISH:

1	Hermetic seal, passivated Stainless Steel, 200°C
2	Hermetic seal, Stainless Steel w/Nickel Plate
3	Carbon Steel w/reflowed tin plate

6. SELECT A TAIL LENGTH:

B	.100±.03
D	.200±.03
F	.300±.03

.005 DIA (M)

Shell Size	Part Number	L Max.	N +.001 –.005	R (TP)	S ±.016	T ±.005	V Thread Class 2A
8	10-626**431**-XXX	.234	.473	.594	.812	.120	.5625-24UNEF
10	**432**-XXX	.234	.590	.719	.938	.120	.6875-24UNEF
12	**433**-XXX	.234	.750	.812	1.031	.120	.8125-20UNEF
14	**434**-XXX	.234	.875	.906	1.125	.120	.9375-20UNEF
16	**435**-XXX	.234	1.000	.969	1.219	.120	1.0625-18UNEF
18	**436**-XXX	.234	1.125	1.062	1.312	.120	1.1875-18UNEF
20	**437**-XXX	.234	1.250	1.156	1.438	.120	1.3125-18UNEF
22	**438**-XXX	.234	1.375	1.250	1.562	.120	1.4375-18UNEF
24	**439**-XXX	.313	1.500	1.375	1.688	.147	1.5625-18UNEF

PCB Box Mounting Receptacle Hermetic

Commercial JT02

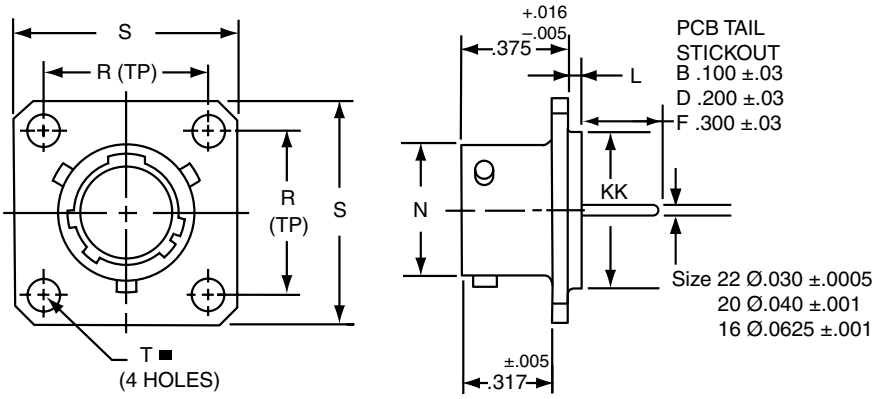

PART # See chart below	1. Base Number	2. Coded Shell Size	3. Insert Arrg.	4. Contact Type/ Alt. Keying Position	5. Shell Finish	6. Tail Length
	10-626	461	-35	P	1	B

HOW TO ORDER

1. BASE NUMBER:

10-626	Base Number for MIL-DTL-38999 Series III Hermetic with PCB Tail

2. SELECT A CODED SHELL SIZE:

See chart below **461-469**, designates size 9-25 shell size.

3. SELECT AN INSERT ARRANGEMENT:

Refer to insert availability chart on page 2-5 and pin-out illustrations on pages 15-29.

-35	Designates Insert Arrangement Number

4. CONTACT TYPE/ALTERNATE KEYING POSITIONS:

Refer to page 90 for alternate rotation letters to use.

P	Designates Pin Contacts in Normal Position
S	Designates Socket Contacts in Normal Position

5. SELECT A SHELL FINISH:

1	Hermetic seal, passivated Stainless Steel, 200°C
2	Hermetic seal, Stainless Steel w/Nickel Plate
3	Carbon Steel w/reflowed tin plate

6. SELECT A TAIL LENGTH:

B	.100±.03
D	.200±.03
F	.300±.03

■ ⊕ .005 DIA Ⓜ

Shell Size	Part Number	L +.006 −.015	N +.001 −.005	R (TP)	S ±.016	T ±.005	KK +.001 −.005
8	10-626**461**-XXX	.051	.473	.594	.812	.120	.562
10	**462**-XXX	.051	.590	.719	.938	.120	.672
12	**463**-XXX	.051	.750	.812	1.031	.120	.781
14	**464**-XXX	.051	.875	.906	1.125	.120	.906
16	**465**-XXX	.051	1.000	.969	1.219	.120	1.031
18	**466**-XXX	.051	1.125	1.062	1.312	.120	1.156
20	**467**-XXX	.051	1.250	1.156	1.438	.120	1.250
22	**468**-XXX	.080	1.375	1.250	1.562	.120	1.375
24	**469**-XXX	.080	1.500	1.375	1.688	.147	1.500

All dimensions for reference only.

PCB Jam Nut Receptacle Hermetic

Commercial (JT07)

Amphenol Aerospace

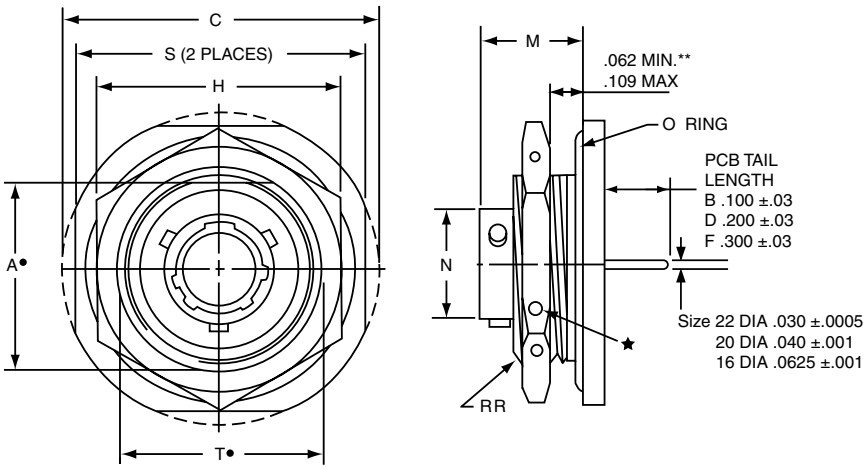

	1.	2.	3.	4.	5.	6.
PART # See chart below	Base Number	Coded Shell Size	Insert Arrg.	Contact Type/ Alt. Keying Position	Shell Finish	Tail Length
	10-626	44	-35	P	1	B

HOW TO ORDER

1. BASE NUMBER:

10-626	Base Number for MIL-DTL-38999 Series III Hermetic with PCB Tail

2. SELECT A CODED SHELL SIZE:

See chart below **441-449**, designates size 9-25 shell size.

3. SELECT AN INSERT ARRANGEMENT:

Refer to insert availability chart on page 2-5 and pin-out illustrations on pages 15-29.

-35	Designates Insert Arrangement Number

4. CONTACT TYPE/ALTERNATE KEYING POSITIONS:

Refer to page 90 for alternate rotation letters to use.

P	Designates Pin Contacts in Normal Position
S	Designates Socket Contacts in Normal Position

5. SELECT A SHELL FINISH:

1	Hermetic seal, passivated Stainless Steel, 200°C
2	Hermetic seal, Stainless Steel w/Nickel Plate
3	Carbon Steel w/reflowed tin plate

6. SELECT A TAIL LENGTH:

B	.100±.03
D	.200±.03
F	.300±.03

Shell Size	Part Number	A+ +.000 −.010	C Max.	H +.017 −.016	M ±.005	N +.001 −.005	S ±.016	T+ +.010 −.000	RR Thread Class 2A
8	10-626**441**-XXX	.830	1.390	1.062	.438	.473	1.250	.884	.8750-20UNEF
10	**442**-XXX	.955	1.515	1.188	.438	.590	1.375	1.007	1.0000-20UNEF
12	**443**-XXX	1.084	1.640	1.312	.438	.750	1.500	1.134	1.1250-18UNEF
14	**444**-XXX	1.208	1.765	1.438	.438	.875	1.625	1.259	1.2500-18UNEF
16	**445**-XXX	1.333	1.953	1.562	.438	1.000	1.781	1.384	1.3750-18UNEF
18	**446**-XXX	1.459	2.031	1.688	.438	1.125	1.890	1.507	1.5000-18UNEF
20	**447**-XXX	1.576	2.156	1.812	.464	1.250	2.016	1.634	1.6250-18UNEF
22	**448**-XXX	1.701	2.280	2.000	.464	1.375	2.140	1.759	1.7500-18UNS
24	**449**-XXX	1.826	2.405	2.125	.464	1.500	2.265	1.884	1.8750-16UN

★ .059 Dia. Min. 3 lockwire holes. Formed lockwire hole design (6 holes) is optional.

\+ "D" shaped mounting hole dimensions.

** Panel Thickness

All dimensions for reference only.

PCB Solder Mounting Receptacle Hermetic

Commercial (JTI)

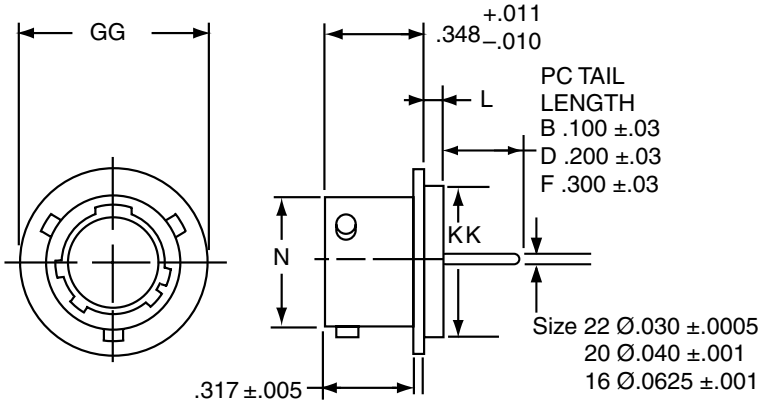

PART # See chart below	1. Base Number	2. Coded Shell Size	3. Insert Arrg.	4. Contact Type/ Alt. Keying Position	5. Shell Finish	6. Tail Length
	10-626	451	-35	P	1	B

HOW TO ORDER

1. BASE NUMBER:

10-626	Base Number for MIL-DTL-38999 Series III Hermetic with PCB Tail

2. SELECT A CODED SHELL SIZE:

See chart below **451-459**, designates size 9-25 shell size.

3. SELECT AN INSERT ARRANGEMENT:

Refer to insert availability chart on page 2-5 and pin-out illustrations on pages 15-29.

-35	Designates Insert Arrangement Number

4. CONTACT TYPE/KEYING POSITIONS:

Refer to page 90 for alternate rotation letters to use.

P	Designates Pin Contacts in Normal Position
S	Designates Socket Contacts in Normal Position

5. SELECT A SHELL FINISH:

1	Hermetic seal, passivated Stainless Steel, 200°C
2	Hermetic seal, Stainless Steel w/Nickel Plate
3	Carbon Steel w/reflowed tin plate

6. SELECT A TAIL LENGTH:

B	.100±.03
D	.200±.03
F	.300±.03

Shell Size	Part Number	L +.011 –.010	N +.001 –.005	GG +.011 –.010	KK +.001 –.005
8	10-626**451**-XXX	.078	.473	.687	.562
10	**452**-XXX	.078	.590	.797	.672
12	**453**-XXX	.078	.750	.906	.781
14	**454**-XXX	.078	.875	1.031	.906
16	**455**-XXX	.078	1.000	1.156	1.031
18	**456**-XXX	.078	1.125	1.281	1.156
20	**457**-XXX	.078	1.250	1.375	1.250
22	**458**-XXX	.107	1.375	1.500	1.375
24	**459**-XXX	.107	1.500	1.625	1.500

All dimensions for reference only.
Weld mounting hermetic receptacle also available.
Consult Amphenol Aerospace for availability and dimensions.

MIL-DTL-38999/ 27599, Series I LJT

Amphenol Aerospace

C

TABLE OF CONTENTS FOR SECTION C

Combined MIL-DTL-38999 Series I, II, III
Shell Size & Insert Arrangement Availability 2-5
Insert Arrangement Drawings 11-18
Contact -Ratings, Service Ratings, Finish Data . . 19, 20
Sealing Plugs 20
MIL-DTL-38999, Series II JT and Series I LJT
Features and Benefits 83-84
How to Order (Military) 114-115
How to Order (Commercial) 116-118

LJT SHELL STYLES:

Crimp Wall Mounting Receptacle
LJT00R (MS27466) 119
Crimp Wall Mount Recept. for Back Panel Mounting
LJTPQ00R (MS27656) 120
Crimp Line Receptacle LJT01R 121
Crimp Box Mounting Receptacle LJT02R (MS27496),
Crimp Box Mounting Receptacle for
Back Panel Mounting LJTP02R (MS27505) 122
Crimp Jam Nut Receptacle LJT07R (MS27468) . . 123
Crimp Straight Plug LJT06R (MS27467) 124

HERMETIC:

Hermetic Wall Mounting Receptacle LJT00
(MS27469) 125
Hermetic Jam Nut Receptacle LJT07 (MS27470) . 126
Hermetic Solder Mounting Receptacle LJTL
(MS27471) 127
Solder Wall Mounting Receptacle LJT00 (MS20026) 128
Solder Line Receptacle LJT01 (MS20027) 129
Solder Straight Plug LJT06 (MS20028) 130
Solder Jam Nut Receptacle LJT07 (MS20029) . . 131

PCB Shell:

PCB Wall Mounting Receptacle,
Back Panel Mounting 132
PCB Wall Mounting Receptacle,
Back Panel Mounting, Clinch Nuts 133
PCB Box Mounting Receptacle,
Back Panel Mounting 134
PCB Box Mounting Receptacle,
Back Panel Mounting, Clinch Nuts 135
PCB Jam Nut Receptacle (LJT07) 136
PCB Hermetic Wall Mounting Receptacle (LJT00) . 137
PCB Hermetic Jam Nut Receptacle 138
PCB Solder Mounting Receptacle (LJTI) 139

BREAKAWAY:

Breakaway Fail-Safe How to Order
(Military /Commercial) 140
Breakaway Fail-Safe Insert Availability Chart 141
Breakaway Fail-Safe Overview/Information. . . . 142

ACCESSORIES:

Section F 165-184

Military to Commercial Shell Style Conversion Table

How to Order (Military)

MILITARY	DESCRIPTION	COMMERCIAL
MS27466	Crimp Wall Mounting Receptacle	LJT00
MS27656	Crimp Wall Mounting Receptacle (Back Panel)	LJTPQ00
MS27496	Crimp Box Mounting Receptacle	LJT02, LJTP02
MS27505	Crimp Box Mounting Receptacle (Back Panel)	LJTP02
MS27467	Crimp Straight Plug	LJT06
MS27468	Crimp Jam Nut Receptacle	LJT07
MS27469	Hermetic Wall Mounting Receptacle	LJT00, LJTS00
MS27470	Hermetic Jam Nut Receptacle	LJT07, LJTS07
MS27471	Hermetic Solder Mounting Receptacle	LJTIH, LJTIY, LJTSIY
	MIL-DTL-27599	
MS20026	Solder Wall Mounting Receptacle	LJT00
MS20027	Solder Line Receptacle	LJT01
MS20028	Solder Straight Plug	LJT06
MS20029	Solder Jam Mounting Receptacle	LJT07

HOW TO ORDER - MILITARY SERIES I

1. MS Number	2. Service Class	3. Shell Size	4. Finishes	5. Insert Arrangement	6. Contact Style (P or S)	7. Alternate Keying Position
MS27466	E	14	A	18	P	A

1. MS NUMBER SERIES I LJT

MS27466	Crimp Wall Mounting Receptacle
MS27656	Crimp Wall Mounting Receptacle (Back Panel Mounting)
MS27496	Crimp Box Mounting Receptacle
MS27505	Crimp Box Mounting Receptacle (Back Panel Mounting)
MS27467	Crimp Straight Plug
MS27468	Crimp Jam Nut Receptacle
MS27469	Hermetic Wall Mounting Receptacle
MS27470	Hermetic Jam Nut Receptacle
MS27471	Hermetic Solder Mounting Receptacle
MIL-DTL-27599	
MS20026	Solder Wall Mounting Receptacle
MS20027	Solder Line Receptacle
MS20028	Solder Straight Plug
MS20029	Solder Jam Nut Receptacle

2. SERVICE CLASS

CRIMP		SOLDER		
WALL MOUNT (466)	BOX MOUNT (496)	WALL MOUNT (026)	JAM NUT (029)	
WALL MOUNT BPM (656)	BOX MOUNT BPM (505)	LINE (027)		
STRAIGHT PLUG (467)		STRAIGHT PLUG (028)		
JAM NUT (468)				
E	E			Environmental crimp applications. Box Mount versions using spacer grommets are not environmental.
P			P	Potting crimp applications. Supplied with spacer grommet and potting boot.
T		T		Environmental applications. Supplied without rear accessories. Design provides serrations on rear threads of shells.

2. HERMETIC SERVICE CLASS

WALL MOUNT (469)	
JAM NUT (470)	
SOLDER MOUNT (471)	
Y	Hermetically interfacial seal

Amphenol Aerospace

How to Order (Military)

1.	2.	3.	4.	5.	6.	7.
MS Number	Service Class	Shell Size	Finishes	Insert Arrangement	Contact Style (P or S)	Alternate Keying Position
MS27466	E	15	A	18	P	A

3. SHELL SIZE

See table on page 2-5

Shell Size & Insert Arrangement are on pages 2-5. First number represents Shell Size, second number is the Insert Arrangement. Place Shell Size in box 3 and Insert Arrangement in box 5.

4. FINISHES

Finish	Military Finish Data
Cadmium plated nickel base 175°C	A
Olive drab cadmium plate nickel base 175°C	B
Electroless nickel 200°C	F
Electroless nickel, space compatible 200°C	
Anodic coating (Alumilite) 200°C	C
Chromate treated (Iridite 14-2) 125°C	
Passivated steel 200°C	E
Nickel-PTFE 175°C	
HERMETIC FINISHES	
Carbon steel shell tin plated & contacts	D
Stainless steel shell passivated	E
Stainless steel nickel plated	N

5. INSERT ARRANGEMENT

See table on page 2-5

6. CONTACTS

P	Pin Contacts
S	Socket Contacts

7. ALTERNATE KEYING POSITION

"A" designates Alternate keying connector assembly. Other basic alternate keys are "B", "C" and "D". No letter required for normal rotation (no rotation) position.

A plug with a given rotation letter will mate with a receptacle with the same rotation letter. The AB angle for a given connector is the same whether it contains pins or sockets. Only the master key/keyway rotates in the shell, and the minor keys are fixed. AB angles shown are viewed from the front face of the connector, a receptacle is shown below. The angles for the plug are exactly the same except the direction of rotation is opposite of that shown for the receptacle.

The "N" designation is not referenced in part number, it is omitted.

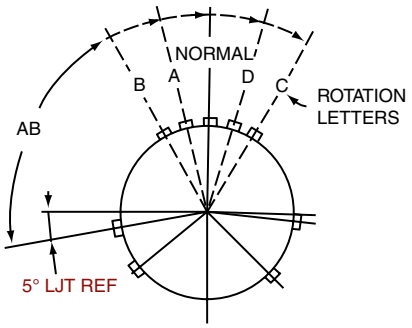

RELATIVE POSSIBLE POSITION OF ROTATED MASTER KEYWAY (front face of receptacle shown)

LJT Key/Keyway Rotation

AB ANGLE OF ROTATION (Degrees)					
Shell Size	Normal	A	B	C	D
9	95°	77°	-	-	113°
11	95°	81°	67°	123°	109°
13	95°	75°	63°	127°	115°
15	95°	74°	61°	129°	116°
17	95°	77°	65°	125°	113°
19	95°	77°	65°	125°	113°
21	95°	77°	65°	125°	113°
23	95°	80°	69°	121°	110°
25	95°	80°	69°	121°	110°

MIL-DTL-38999/ 27599, Series I LJT

How to Order (Commercial)

1.	2.	3.	4.	5.	6.
Table & Style	Service Class	Shell Size -Insert Arrg.	Contact Style (P or S)	Alternate Keying Position	Strain Relief/Finish Variation Suffix**
LJT00	RT	9-35	P	B	(014)

** If Required

1. CONNECTOR TYPE	
LJT	Long Junior Tri-Lock
LJTS	High Temperature Connector
LJTN	Chemical and Fuel Resistant
LJTPQ	Wall Mount Receptacle Back Panel
LJTPSQ	Wall Mount Receptacle Back Panel High Temperature
LJTPNQ	Wall Mount Receptacle Back Panel Chemical and Fuel Resistant
LJTP	Box Mount Receptacle Back Panel
LJTPS	Box Mount Receptalce Back Panel Mounted High Temperature
LJTPN	Box Mount Receptacle Back Panel Chemical and Fuel Resistant

2. SHELL STYLE RECEPTACLE CRIMP	
02	Box Mount Recptacle Panel Mount
00	Wall Mount Receptacle Panel Mount
07	Jam Nut Receptacle
01	Inline Receptacle

2. SHELL STYLE PLUG	
06	Straight Plug
08	90° Plug

2. HERMETIC	
00	Wall Mounting Receptacle
07	Jam Nut Receptacle
I	Solder Mounting Receptacle

2. RECEPTACLE WITH PCB CONTACTS	
88/91 569	Wall Mounting Receptacle (Back Panel) See page 131
88/91 628	Wall Mounting Receptacle (Back Panel) (Clinch Nut) see page 132
88/91 569	Box Mounting Receptacle (Back Panel) See page 133
88/91 628	Box Mounting Receptacle (Back Panel)(Clinch Nut) see page 134
88/91 569	Jam Nut Receptacle see page 135
10-626	Hermetic Wall Mount Receptacle see page 136
10-626	Hermetic Jam Nut Receptacle see page 137
10-626	Hermetic Solder Mounting Receptacle see page 138

Wall Mounting Receptacle

Line Receptacle

Jam Nut Receptacle

Straight Plug

Solder Mounting Receptacle

Lanyard Release Plug

2. SERVICE CLASS

CRIMP		
WALL MOUNT	Box Mount	Crimp Contacts/ Connectors
PLUG		
LINE		
JAM NUT		
RP		Potting crimp applications. Supplied with spacer grommet and potting boot.††
RE	RE	Environmental crimp applications. Supplied with a grommet and compression nut. Can be supplied with strain relief integral with compression nut "RE(SR)".
RT		Environmental applications. Supplied without rear accessories. Design provides serrations on rear threads of shells.

SOLDER	
WALL MOUNT	Solder Contacts/ Connectors
LINE	
STRAIGHT PLUG	
JAM NUT	
P	Potting applications: These connectors are supplied with a potting boot. All shells are designed with integral features to retain potting boots.
C	Pressurized applications
T	MIL-DTL-27599 applications-general duty, pressurized (receptacle only) (LJT only molded in solder type contacts) Not applicable with Box Mount Styles

HERMETIC	
WALL MOUNT	
JAM NUT	
SOLDER MOUNTING RECEPTACLE	
Y	Same as "H" with interfacial seal.
H	Hermetic applications- Fused compression glass sealed inserts. Leakage rate less than .01 micron cu. ft./hr. (1 x 10-7 cc/sec.) at 15 psi differential.

3. SHELL SIZE & INSERT ARRANGEMENT
SEE PAGE 2-5

First number represents Shell Size,
second number is the Insert Arrangement.

4. CONTACTS	
P	Pin Contacts
S	Socket Contacts

MIL-DTL-38999/ 27599, Series I LJT

How to Order (Commercial)

5. ALTERNATE KEYING POSITION

"A" designates Alternate keying connector assembly. Other basic alternate keys are "B", "C" and "D". No letter required for normal rotation (no rotation) position.

A plug with a given rotation letter will mate with a receptacle with the same rotation letter. The AB angle for a given connector is the same whether it contains pins or sockets. Only the master key/keyway rotates in the shell, and the minor keys are fixed.
AB angles shown are viewed from the front face of the connector, a receptacle is shown below. The angles for the plug are exactly the same except the direction of rotation is opposite of that shown for the receptacle.

The "N" designation is not referenced in part number, it is omitted.

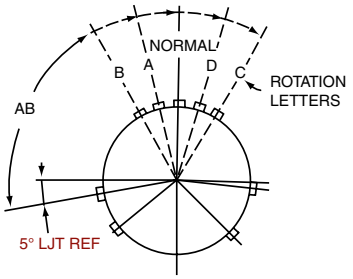

RELATIVE POSSIBLE POSITION OF ROTATED MASTER KEYWAY
(front face of receptacle shown)

LJT Key/Keyway Rotation

AB ANGLE OF ROTATION (Degrees)					
Shell Size	Normal	A	B	C	D
9	95°	77°	-	-	113°
11	95°	81°	67°	123°	109°
13	95°	75°	63°	127°	115°
15	95°	74°	61°	129°	116°
17	95°	77°	65°	125°	113°
19	95°	77°	65°	125°	113°
21	95°	77°	65°	125°	113°
23	95°	80°	69°	121°	110°
25	95°	80°	69°	121°	110°

6. SELECT A STRAIN RELIEF OPTION OR FINISH VARIATION SUFFIX

Strain Relief Options: "SR" designates a strain relief clamp. Strain reliefs are available only on Service Class "C" and "RE" (see step 3. Service Class)
Finish Variation Suffix: See finish variations available in table to your right.

6. HERMETIC FINISHES

Finish	Finish Suffix
Carbon steel shell tin plated & contacts	(468)
Stainless steel shell passivated	(162)
Stainless steel nickel plated	()

6. FINISHES

Finish	Finish Suffix	Finish Plus "SR" Suffix
		Class RE and C Only
AP-93 Tri-Nickel Alloy, Aluminum, 1000 Hr., 200°C, -65dB@100Hz*	(075)	
Cadmium plated nickel base 175°C		(SR)
Olive drab cadmium plate nickel base 175°C	(014)	(386)
Electroless nickel 200°C	(023)	(424)
Electroless nickel, space compatible 200°C	(453)	(467)
Anodic coating (Alumilite) 200°C	(005)	(300)
Chromate treated (Iridite 14-2) 125°C	(011)	(344)
Passivated steel 200°C	-	-
Nickel-PTFE 175°C	(045)	(582)
Zinc-Nickel Plated 175°C	(033)	

Wall Mounting Receptacle - Crimp

Military (MS27466), Commercial (LJT00R)

PART NUMBER BUILDER Page 114-118

MILITARY
MS27466E
MS27466P
MS27466T

Commercial
LJT00RE
LJT00RP
LJT00RT

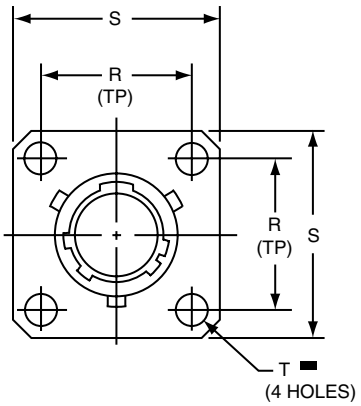

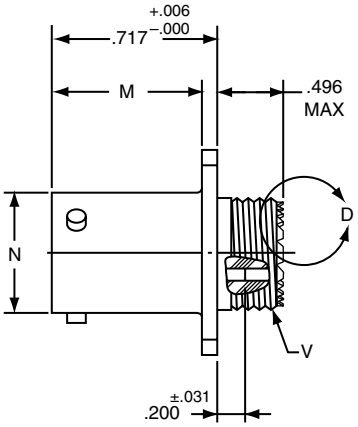

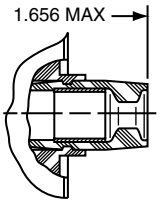

VIEW D ENLARGED
FOR COAXIAL USE ONLY

Commercial
LJT00RE-XX-XXX
LJT00RT-XX-XXX

Military
MS27466E
MS27466T

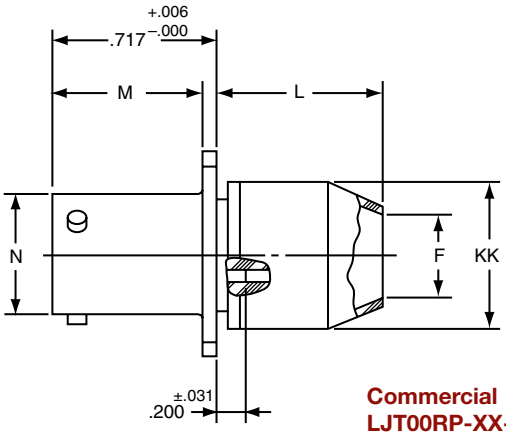

Commercial
LJT00RP-XX-XXX

Military
MS27466P

■ ⊕ .005 DIA Ⓜ

Shell Size	F Dia. ±.010	L Max.	M +.000 −.005	N +.001 −.005	R (TP)	S ±.016	T Dia. ±.005	V Thread Class 2A (Plated)	KK Dia. Max
9	.444	.813	.632	.572	.719	.938	.128	.4375-28 UNEF	.608
11	.558	.813	.632	.700	.812	1.031	.128	.5625-24 UNEF	.734
13	.683	.813	.632	.850	.906	1.125	.128	.6875-24 UNEF	.858
15	.808	.813	.632	.975	.969	1.219	.128	.8125-20 UNEF	.984
17	.909	.813	.632	1.100	1.062	1.312	.128	.9375-20 UNEF	1.110
19	1.034	.813	.632	1.207	1.156	1.438	.128	1.0625-18 UNEF	1.234
21	1.159	.906	.602	1.332	1.250	1.562	.128	1.1875-18 UNEF	1.360
23	1.284	.906	.602	1.457	1.375	1.688	.147	1.3125-18 UNEF	1.484
25	1.409	.906	.602	1.582	1.500	1.812	.147	1.4375-18 UNEF	1.610

All dimensions for reference only.

Wall Mounting Receptacle (Back Panel Mounting)

Military (MS27656), Commercial (LJTPQ00R)

PART NUMBER BUILDER Page 114-118

MILITARY
MS27656E
MS27656P
MS27656T

Commercial
LJTQ00RE
LJTPQ00RP
LJTPQ00RT

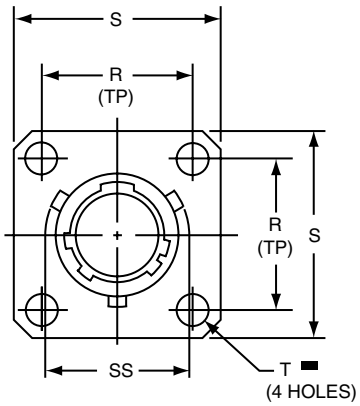

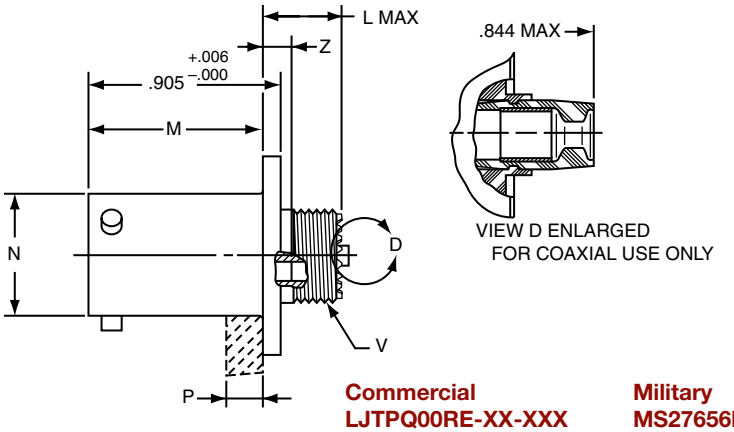

Commercial
LJTPQ00RE-XX-XXX
LJTPQ00RT-XX-XXX

Military
MS27656E
MS27656T

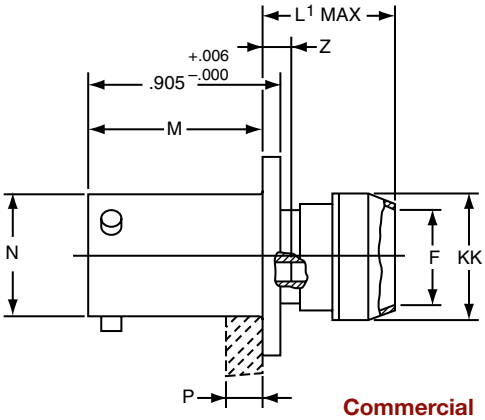

Commercial
LJTPQ00RP-XX-XXX

Military
MS27656P

.005 DIA Ⓜ

Shell Size	F Dia. ±.010	L Max.	L[1] Max.	M +.000 −.005	N Dia.	P Max. Panel Thickness	R (TP)	S +.011 −.010	T Dia. ±.005	V Thread Class 2A (Plated)	Z Max	KK Dia. Max	SS Dia. +.000 −.016
9	.444	.453	.641	.820	.572	.234	.719	.938	.128	.4375-28 UNEF	.138	.625	.662
11	.558	.453	.641	.820	.700	.234	.812	1.031	.128	.5625-24 UNEF	.138	.750	.810
13	.683	.453	.641	.820	.850	.234	.906	1.125	.128	.6875-24 UNEF	.138	.875	.960
15	.808	.453	.641	.820	.975	.234	.969	1.219	.128	.8125-20 UNEF	.138	1.000	1.085
17	.909	.453	.641	.820	1.100	.234	1.062	1.312	.128	.9375-20 UNEF	.138	1.125	1.210
19	1.034	.453	.641	.820	1.207	.234	1.156	1.438	.128	1.0625-18 UNEF	.138	1.250	1.317
21	1.159	.484	.672	.790	1.332	.204	1.250	1.562	.128	1.1875-18 UNEF	.168	1.375	1.442
23	1.284	.484	.672	.790	1.457	.204	1.375	1.688	.147	1.3125-18 UNEF	.168	1.500	1.567
25	1.409	.484	.672	.790	1.582	.193	1.500	1.812	.147	1.4375-18 UNEF	.168	1.625	1.692

All dimensions for reference only.
Note: MS27656 superseded MS 27515.

Line Receptacle - Crimp

Commercial (LJT01R)

PART NUMBER BUILDER Page 114-118

Commercial

LJT01RE
LJT01RT
LJT01RP

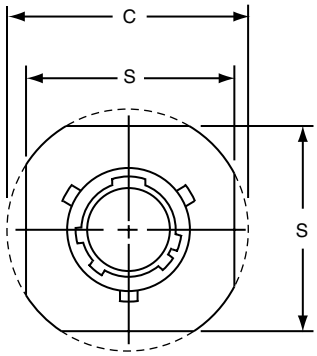

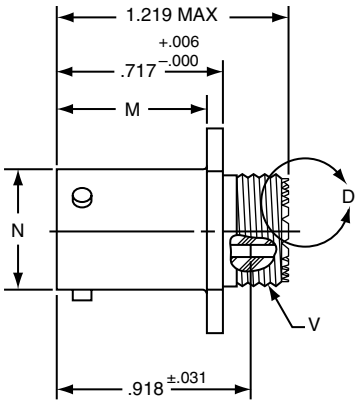

Commercial
LJT01RE-XX-XXX
LJT01RT-XX-XXX
LJT01RP-XX-XXX

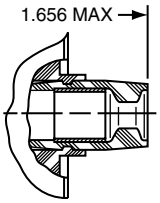

VIEW D ENLARGED
FOR COAXIAL USE ONLY

Shell Size	C Max.	M +.000 −.005	N +.001 −.005	S ±.016	V Thread Class 2A (Plated)
9	1.094	.632	.572	.938	.4375-28 UNEF
11	1.188	.632	.700	1.031	.5625-24 UNEF
13	1.281	.632	.850	1.125	.6875-24 UNEF
15	1.375	.632	.975	1.219	.8125-20 UNEF
17	1.469	.632	1.100	1.312	.9375-20 UNEF
19	1.594	.632	1.207	1.438	1.0625-18 UNEF
21	1.719	.602	1.332	1.562	1.1875-18 UNEF
23	1.844	.602	1.457	1.688	1.3125-18 UNEF
25	1.969	.602	1.582	1.812	1.4375-18 UNEF

All dimensions for reference only.

Box Mounting Receptacle (Back Panel Mounting)

Military (MS27496 & MS27505), Commercial (LJT02R & LJTP02R)

PART NUMBER BUILDER Page 114-118

MILITARY
MS27496E
MS27505E

Commercial
LJT02RE
LJTP02RE (Back Panel Mounting)

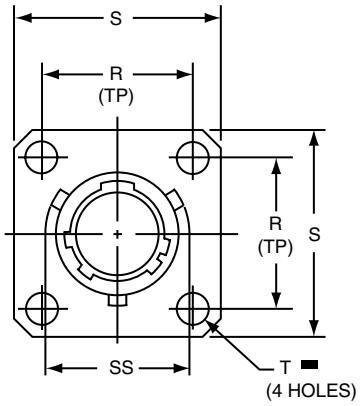

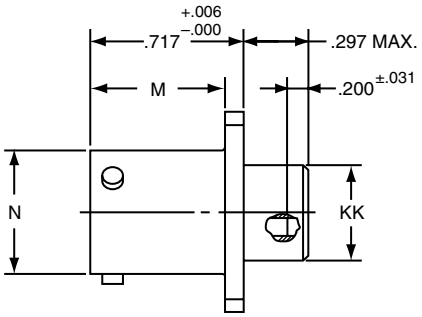

Commercial
LJT02RE-XX-XXX

Military
MS27496E

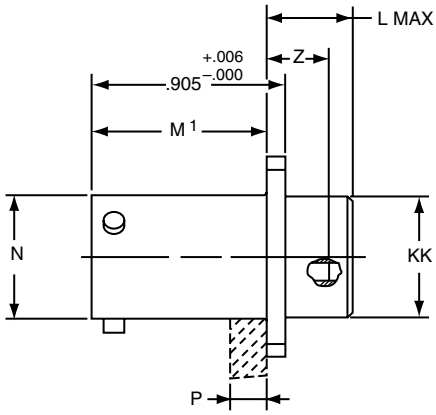

Commercial
LJTP02RE-XX-XXX

Military
MS27505E

.005 DIA Ⓜ

Shell Size	L Max.	M +.000 −.005	M[1] +.001 −.005	N Dia +.001 −.005	P Max. Panel Thickness	R (TP)	S +.011 −.010	T Dia. ±.005	Z ±.031	KK Dia. +.006 −.005	SS Dia. +.000 −.016
9	.203	.632	.820	.572	.234	.719	.938	.128	.107	.433	.662
11	.203	.632	.820	.700	.234	.812	1.031	.128	.107	.557	.810
13	.203	.632	.820	.850	.234	.906	1.125	.128	.107	.676	.960
15	.203	.632	.820	.975	.234	.969	1.219	.128	.107	.801	1.085
17	.203	.632	.820	1.100	.234	1.062	1.312	.128	.107	.926	1.210
19	.203	.632	.820	1.207	.234	1.156	1.438	.128	.107	1.032	1.317
21	.234	.602	.790	1.332	.204	1.250	1.562	.128	.137	1.157	1.442
23	.234	.602	.790	1.457	.204	1.375	1.688	.147	.137	1.282	1.567
25	.234	.602	.790	1.582	.193	1.500	1.812	.147	.137	1.407	1.692

All dimensions for reference only.

Jam Nut Receptacle - Crimp

Military (MS27468), Commercial (LJT07R)

PART NUMBER BUILDER Page 114-118

MILITARY
MS27468E
MS27468P
MS27468T

Commercial **LJT07RE, LJT07RP, LJT07RT**

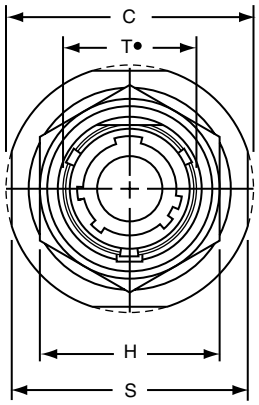

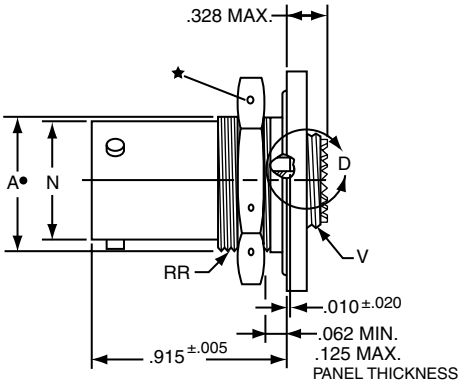

Commercial
LJT07RE-XX-XXX
LJT07RT-XX-XXX

Military
MS27468E
MS27468T

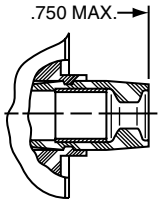

VIEW D ENLARGED
FOR COAXIAL USE ONLY

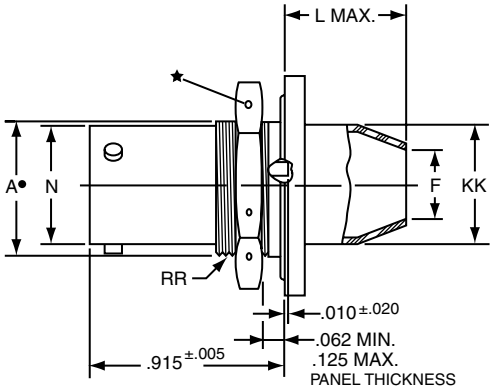

Commercial
LJT07RP-XX-XXX

Military
MS27468P

★ .059 Dia. Min. 3 lockwire holes.
Formed lockwire hole design (6 holes) is optional.
\+ "D" shaped mounting hole dimensions.

Shell Size	A+ +.000 –.010	C Max.	F Dia. ±.010	H Hex +.017 –.016	L Max.	N +.001 –.005	S ±.016	T+ +.010 –.000	V Thread Class 2A (Plated)	KK Dia. Max.	RR Thread Class 2A (Plated)
9	.669	1.199	.444	.875	.625	.572	1.062	.697	.4375-28 UNEF	.608	.6875-24 UNEF
11	.769	1.386	.558	1.000	.625	.700	1.250	.822	.5625-24 UNEF	.734	.8125-20 UNEF
13	.955	1.511	.683	1.188	.625	.850	1.375	1.007	.6875-24 UNEF	.858	1.0000-20 UNEF
15	1.084	1.636	.808	1.312	.625	.975	1.500	1.134	.8125-20 UNEF	.984	1.1250-18 UNEF
17	1.208	1.761	.909	1.438	.625	1.100	1.625	1.259	.9375-20 UNEF	1.110	1.2500-18 UNEF
19	1.333	1.949	1.034	1.562	.656	1.207	1.812	1.384	1.0625-18 UNEF	1.234	1.3750-18 UNEF
21	1.459	2.073	1.159	1.688	.750	1.332	1.938	1.507	1.1875-18 UNEF	1.360	1.5000-18 UNEF
23	1.580	2.199	1.284	1.812	.750	1.457	2.062	1.634	1.3125-18 UNEF	1.484	1.6250-18 UNEF
25	1.709	2.323	1.409	2.000	.750	1.582	2.188	1.759	1.4375-18 UNEF	1.610	1.7500-18 UNS

All dimensions for reference only.

Straight Plug - Crimp

Military (MS27467), Commercial (LJT06R)

PART NUMBER BUILDER Page 114-118

MILITARY
MS27467E
MS27467P
MS27467T

Commercial **LJT06RE, LJT02RP, LJT02RT**

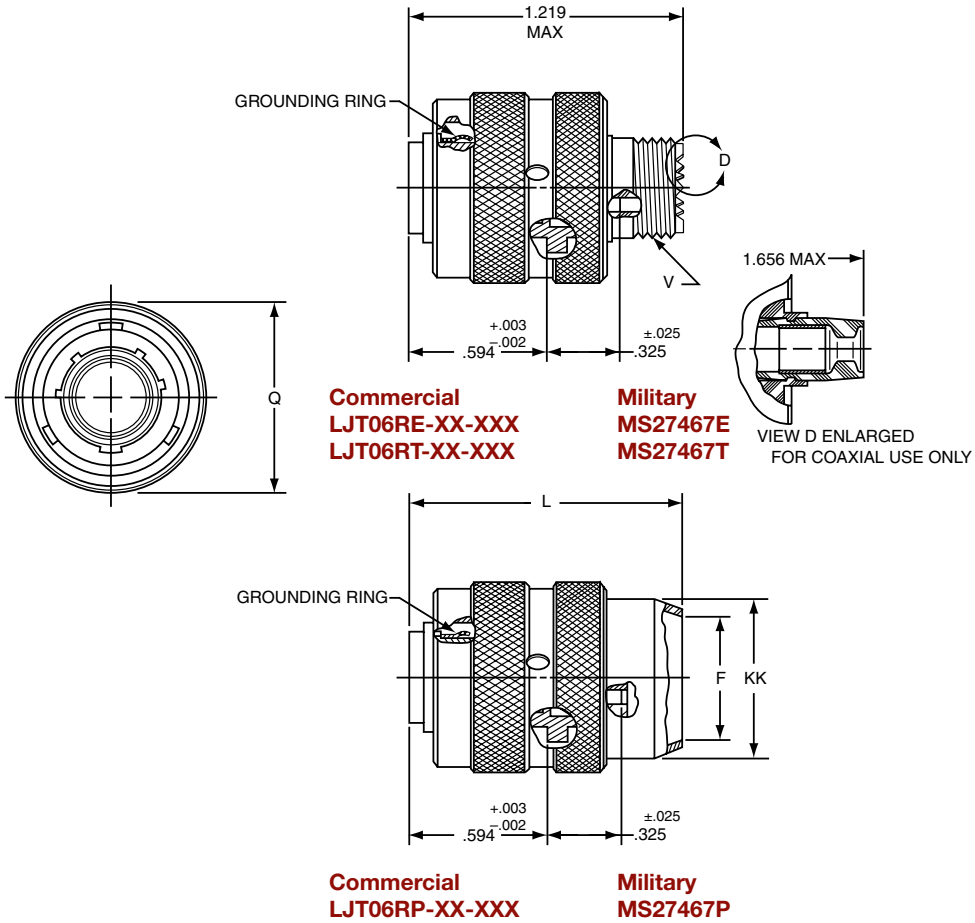

Shell Size	F Dia. ±.010	L Max.	Q Max.	V Thread Class 2A (Plated)	KK Dia. Max.
9	.444	1.531	.844	.4375-28 UNEF	.608
11	.528	1.531	.969	.5625-24 UNEF	.734
13	.683	1.531	1.141	.6875-24 UNEF	.858
15	.808	1.531	1.266	.8125-20 UNEF	.984
17	.909	1.531	1.391	.9375-20 UNEF	1.110
19	1.034	1.531	1.500	1.0625-18 UNEF	1.234
21	1.159	1.625	1.625	1.1875-18 UNEF	1.360
23	1.284	1.625	1.750	1.3125-18 UNEF	1.484
25	1.409	1.625	1.875	1.4375-18 UNEF	1.610

All dimensions for reference only.

Wall Mounting Receptacle - Hermetic

Military (MS27469), Commercial (LJT00)

PART NUMBER BUILDER Page 114-118

MILITARY
MS27469Y

Commercial
LJT00H, LJT00Y
LJTS00Y

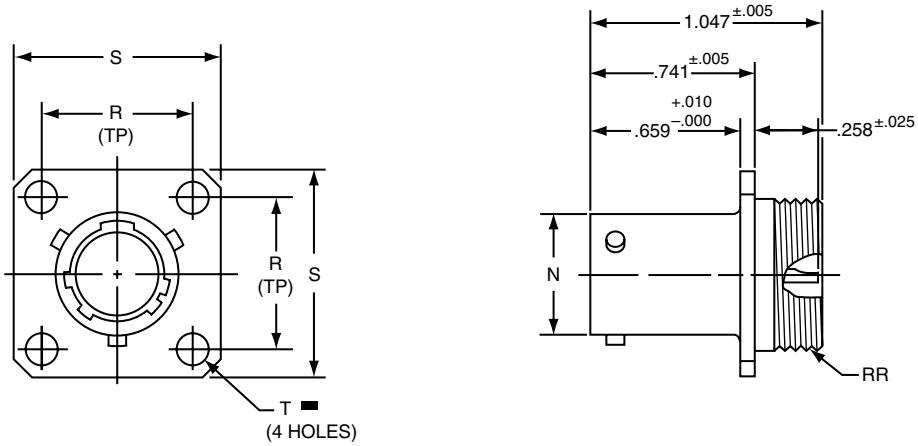

	Commercial	Military
*	LJT00H-XX-XXX	
**	LJT00Y-XX-XXX	MS27469YXXD
***	LJTS00Y-XX-XXX	MS27469YXXE

▬ ⊕ .005 DIA Ⓜ

* Long Junior Tri-Lock
** Interfacial seal wafer
*** High temperature version, interfacial seal wafer with stainless steel shell

Shell Size	N Dia. +.001 −.005	R (TP)	S ±.016	T Dia. ±.005	RR Thread Class 2A
9	.572	.719	.938	.128	.6875-24 UNEF
11	.700	.812	1.031	.128	.8125-20 UNEF
13	.850	.906	1.125	.128	.9375-20 UNEF
15	.975	.969	1.219	.128	1.0625-18 UNEF
17	1.100	1.062	1.312	.128	1.1875-18 UNEF
19	1.207	1.156	1.438	.128	1.3125-18 UNEF
21	1.332	1.250	1.562	.128	1.4375-18 UNEF
23	1.457	1.375	1.688	.147	1.5625-18 UNEF
25	1.582	1.500	1.812	.147	1.6875-18 UNEF

All dimensions for reference only.

Jam Nut Receptacle - Hermetic

Military (MS27470) Commercial (LJT07 & LJTS07)

PART NUMBER BUILDER Page 114-118

MILITARY
MS27470Y

Commercial
LJT07H, LJT07Y
LJTS07Y

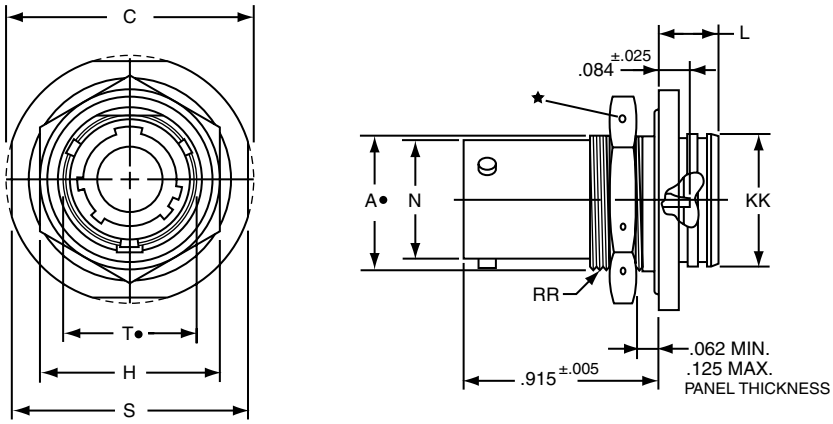

	Commercial	Military
*	LJT07H-XX-XXX	
**	LJT07Y-XX-XXX	MS27470YXXD
***	LJTS07Y-XX-XXX	MS27470YXXE

★ .059 Dia. Min. 3 lockwire holes.
Formed lockwire hole design
(6 holes) is optional.
\+ "D" shaped mounting hole dimensions.
* *Long Junior Tri-Lock
** Interfacial seal wafer
*** High temperature version, interfacial seal wafer with stainless steel shell

Shell Size	A+ +.000 −.010	C Max.	H Hex +.017 −.016	L Max.	N +.000 −.005	S ±.016	T+ +.010 −.000	KK +.011 −.000	RR Thread Class 2A (Plated)
9	.669	1.199	.875	.297	.572	1.062	.697	.642	.6875-24 UNEF
11	.769	1.386	1.000	.297	.700	1.250	.822	.766	.8125-20 UNEF
13	.955	1.511	1.188	.297	.850	1.375	1.007	.892	1.0000-20 UNEF
15	1.084	1.636	1.312	.297	.975	1.500	1.134	1.018	1.1250-18 UNEF
17	1.208	1.761	1.438	.297	1.100	1.625	1.259	1.142	1.2500-18 UNEF
19	1.333	1.949	1.562	.328	1.207	1.812	1.384	1.268	1.3750-18 UNEF
21	1.459	2.073	1.688	.328	1.332	1.938	1.507	1.392	1.5000-18 UNEF
23	1.580	2.199	1.812	.328	1.457	2.062	1.634	1.518	1.6250-18 UNEF
25	1.709	2.328	2.000	.328	1.582	2.188	1.759	1.642	1.7500-18 UNS

All dimensions for reference only.

Solder Mounting Receptacle - Hermetic

Military (MS27471), Commercial (LJTI & LJTSI)

PART NUMBER BUILDER Page 114-118

MILITARY
MS27471Y

Commercial
LJTIH, LJTIY
LJTSIY

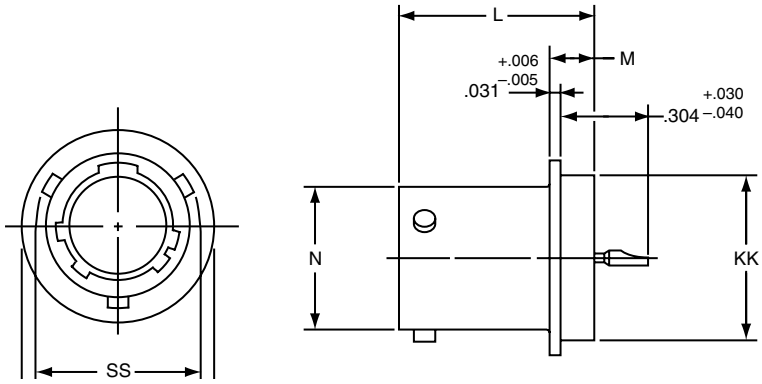

Commercial	Military
* LJTIH-XX-XXX	
** LJTIY-XX-XXX	MS27471YXXD
*** LJTSIY-XX-XXX	MS27471YXXE

* Long Junior Tri-Lock
** Interfacial seal wafer
*** High temperature version, interfacial seal wafer with stainless steel shell

Shell Size	N Dia. +.001 –.005	SS Dia. +.000 –.016	L +.011 –.000	M +.006 –.005	GG Dia. +.011 –.010	KK Dia. +.001 –.005
9	.572	.662	.789	.125	.750	.672
11	.700	.810	.789	.125	.844	.781
13	.850	.960	.789	.125	.969	.906
15	.975	1.085	.789	.125	1.094	1.031
17	1.100	1.210	.789	.125	1.218	1.156
19	1.207	1.317	.789	.125	1.312	1.250
21	1.332	1.442	.789	.125	1.438	1.375
23	1.457	1.567	.821	.156	1.563	1.500
25	1.582	1.692	.821	.156	1.688	1.625

All dimensions for reference only. Weld mounting hermetic receptacle also available.
Consult Amphenol Aerospace for availability and dimensions.

Wall Mounting Receptacle - Solder

Military (MS20026), Commercial (LJT00)

Military qualified to MIL-DTL-27599

PART NUMBER BUILDER Page 114-118

MILITARY
MS20020T

Commercial
LJT00T, LJT00C, LJT00P

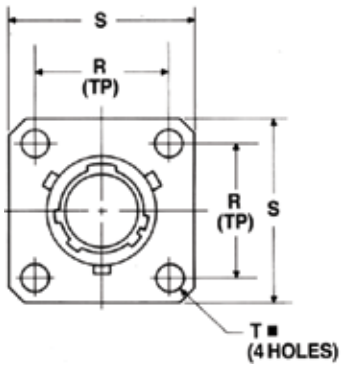

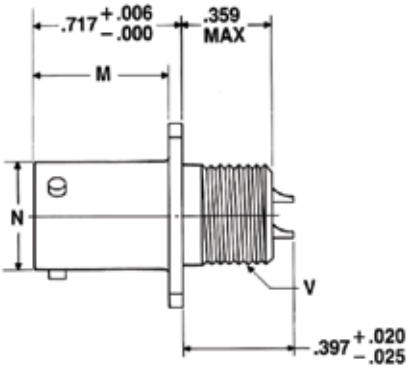

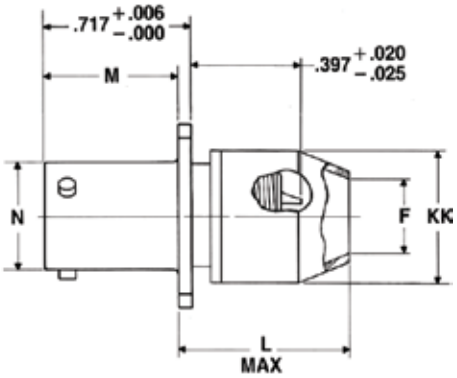

Commercial
LJT00T-XX-XXX
LJT00C-XX-XXX

Military
MS20026T

Commercial
LJT00P-XX-XXX

■ ⊕ .005 DIA Ⓜ

NOTE: For availability of back panel mounting types, check with nearest sales office or call Amphenol Aerospace.

Shell Size	F Dia.	L Max.	M +.000 −.005	N +.001 −.005	R (TP)	S ±.016	T Dia. ±.005	V Thread Class 2A UNEF (Plated)	KK Dia. Max.
9	.327	.625	.632	.572	.719	.938	.128	.4375-28	.608
11	.444	.625	.632	.700	.812	1.031	.128	.5625-24	.734
13	.558	.625	.632	.850	.906	1.125	.128	.6875-24	.858
15	.683	.625	.632	.975	.969	1.219	.128	.8125-20	.984
17	.808	.625	.632	1.100	1.062	1.312	.128	.9375-20	1.110
19	.909	.625	.632	1.207	1.156	1.438	.128	1.0625-18	1.234
21	1.034	.703	.602	1.332	1.250	1.562	.128	1.1875-18	1.360
23	1.159	.703	.602	1.457	1.375	1.688	.147	1.3125-18	1.484
25	1.284	.703	.602	1.582	1.500	1.812	.147	1.4375-18	1.610

Line Receptacle - Solder

Military (MS20027), Commercial (LJT01)

Military qualified to MIL-DTL-27599

PART NUMBER BUILDER Page 114-118

MILITARY
MS20027T

Commercial

LJT01T, LJT01C, LJT01P

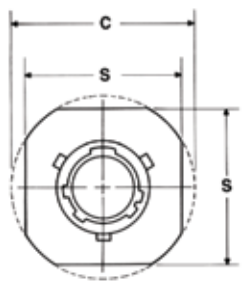

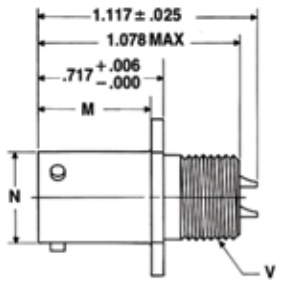

Commercial
LJT01T-XX-XXX
LJT01C-XX-XXX

Military
MS20027T

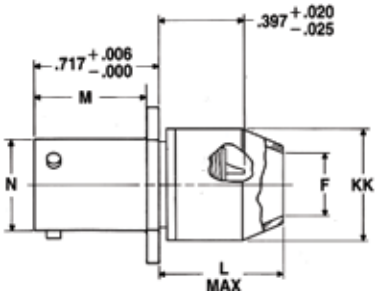

Commercial
LJT01P-XX-XXX

Shell Size	C Max.	F Dia.	L Max.	M +.000 −.005	N +.001 −.005	S ±.016	V Thread Class 2A UNEF (Plated)	KK Dia. Max.
9	1.094	.327	.625	.632	.572	.938	.4375-28	.608
11	1.188	.444	.625	.632	.700	1.031	.5625-24	.734
13	1.281	.558	.625	.632	.850	1.125	.6875-24	.858
15	1.375	.683	.625	.632	.975	1.219	.8125-20	.984
17	1.469	.808	.625	.632	1.100	1.312	.9375-20	1.110
19	1.594	.909	.625	.632	1.207	1.438	1.0625-18	1.234
21	1.719	1.034	.703	.602	1.332	1.562	1.1875-18	1.360
23	1.844	1.159	.703	.602	1.457	1.688	1.3125-18	1.484
25	1.969	1.284	.703	.602	1.582	1.812	1.4375-18	1.610

Straight Plug -Solder

Military (MS20028), Commercial (LJT06)

Military qualified to MIL-DTL-27599

PART NUMBER BUILDER Page 114-118

MILITARY
MS20028T

Commercial
LJT06T, LJT06C, LJT06P,

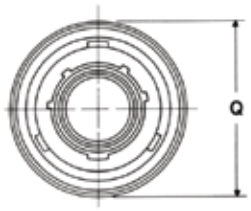

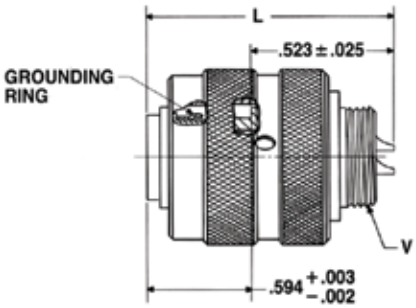

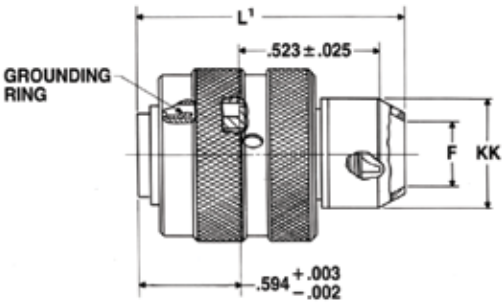

Commercial
LJT06T-XX-XXX
LJT06C-XX-XXX

Military
MS20028T

Commercial
LJT06P-XX-XXX

Shell Size	F Dia.	L Max.	L¹ Max.	Q Max.	V Thread Class 2A UNEF (Plated)	KK Dia. Max.
9	.327	1.128	1.488	.844	.4375-28	.608
11	.444	1.128	1.488	.969	.5625-24	.734
13	.558	1.128	1.488	1.141	.6875-24	.858
15	.683	1.128	1.488	1.266	.8125-20	.984
17	.808	1.128	1.488	1.391	.9375-20	1.110
19	.909	1.128	1.488	1.500	1.0625-18	1.234
21	1.034	1.128	1.566	1.625	1.1875-18	1.360
23	1.159	1.128	1.566	1.750	1.3125-18	1.484
25	1.284	1.191	1.644	1.875	1.4375-18	1.610

Jam Nut Receptacle - Solder

Military (MS20029), Commercial (LJT07)

Amphenol Aerospace

Military qualified to MIL-DTL-27599

PART NUMBER BUILDER Page 114-118

MILITARY
MS20029P

Commercial **LJT07P, LJT07T**

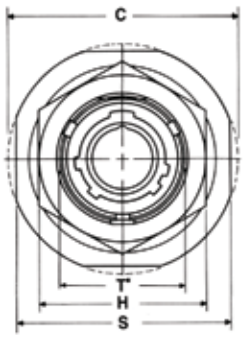

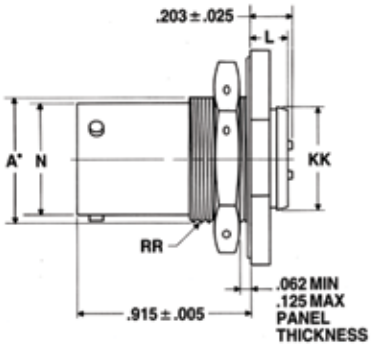

Commercial
LJT07T-XX-XXX

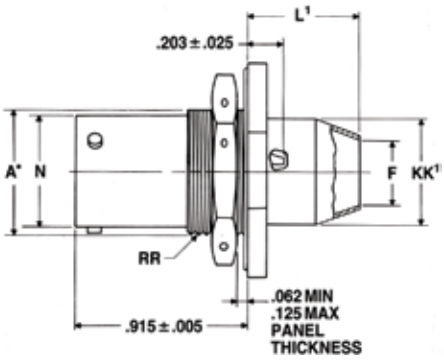

Commercial **Military**
LJT07P-XX-XXX **MS20029P**

+ "D" shaped mounting hole dimensions

Shell Size	A+ +.000 −.010	C Max.	F Dia.	H Hex +.017 −.016	L Max.	L[1] Max.	N +.001 −.005	S ±.016	T+ +.010 −.000	KK +.011 −.000	KK[1] Dia. Max.	RR Thread Class 2A (Plated)
9	.669	1.199	.327	.875	.234	.625	.572	1.062	.697	.516	.608	.6875-24UNEF
11	.769	1.386	.444	1.000	.234	.625	.700	1.250	.822	.642	.734	.8125-20UNEF
13	.955	1.511	.558	1.188	.234	.625	.850	1.375	1.007	.766	.858	1.0000-20UNEF
15	1.084	1.636	.683	1.312	.234	.625	.975	1.500	1.134	.892	.984	1.1250-18UNEF
17	1.208	1.761	.808	1.438	.234	.625	1.100	1.625	1.259	1.018	1.110	1.2500-18UNEF
19	1.333	1.949	.909	1.562	.266	.625	1.207	1.812	1.384	1.142	1.234	1.3750-18UNEF
21	1.459	2.073	1.034	1.688	.266	.656	1.332	1.938	1.507	1.268	1.360	1.5000-18UNEF
23	1.580	2.199	1.159	1.812	.266	.750	1.457	2.062	1.634	1.392	1.484	1.6250-18UNEF
25	1.709	2.323	1.284	2.000	.266	.750	1.582	2.188	1.759	1.518	1.610	1.7500-18UNS

All dimensions for reference only.

PCB Wall Mounting Receptacle (Back Panel Mounting)

Commercial (LJTPQ00)

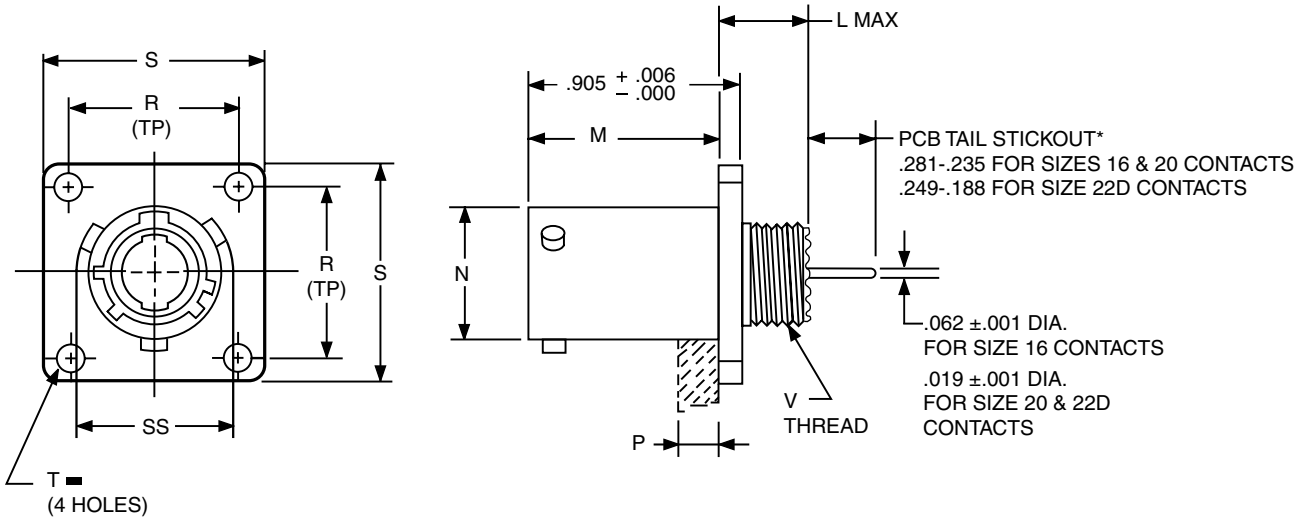

PART # See chart below	1. Shell Finish	2. Base Number	3. Coded Shell Size	4. Insert Arrg.	5. Contact Type/Alt. Keying
	88/91	569	70X	- 35	P

HOW TO ORDER

1. SELECT A SHELL FINISH:

88	Designates olive drab cadmium plated connector shell
91	Designates electroless nickel plated connector shell

Consult Amphenol Aerospace for ordering of composite styles.

2. BASE NUMBER:

569	Base Number

3. SELECT A CODED SHELL SIZE:

See chart below **701-709**, designates size 9-25 shell size. Example: **701**= Size 9 Shell

4. SELECT AN INSERT ARRANGEMENT:

Refer to insert availability chart on page 2-5 and pin-out illustrations on pages 15-29.

-35	Designates Insert Arrangement Number

5. CONTACT TYPE/ALTERNATE KEYING POSITIONS:

Refer to page 118 for alternate rotation letters to use.

P	Designates Pin Contacts in Normal Position
S	Designates Socket Contacts in Normal Position

▬ ⊕ .005 DIA Ⓜ

Shell Size	Coded Shell Size	L Max.	M +.000 −.005	N Dia.	P Max. Panel Thickness	R (TP)	S +.011 −.010	T Dia. ±.005	V Thread Class 2A (Plated)	SS Dia. +.000 −.016
9	701	.453	.820	.572	.234	.719	.938	.128	.4375-28 UNEF	.662
11	702	.453	.820	.700	.234	.812	1.031	.128	.5625-24 UNEF	.810
13	703	.453	.820	.850	.234	.906	1.125	.128	.6875-24 UNEF	.960
15	704	.453	.820	.975	.234	.969	1.219	.128	.8125-20 UNEF	1.085
17	705	.453	.820	1.100	.234	1.062	1.312	.128	.9375-20 UNEF	1.210
19	706	.453	.820	1.207	.234	1.156	1.438	.128	1.0625-18 UNEF	1.317
21	707	.484	.790	1.332	.204	1.250	1.562	.128	1.1875-18 UNEF	1.442
23	708	.484	.790	1.457	.204	1.375	1.688	.147	1.3125-18 UNEF	1.567
25	709	.484	.790	1.582	.193	1.500	1.812	.147	1.4375-18 UNEF	1.692

All dimensions for reference only.
Most common options are shown; other options are available.

PCB Wall Mounting Receptacle (Back Panel Mounting) (With Clinch Nuts)

Commercial (LJTPQ00)

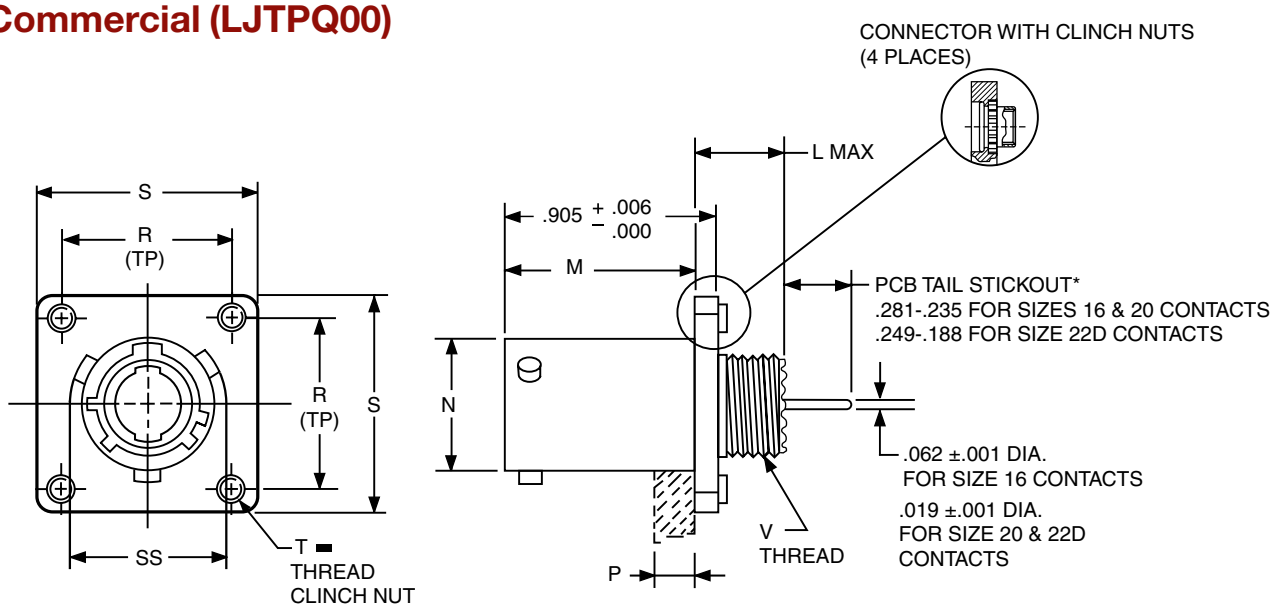

PART # See chart below	1. Shell Finish	2. Base Number	3. Coded Shell Size	4. Insert Arrg.	5. Contact Type/Alt. Keying
	88/91	628	70X	- 35	P

HOW TO ORDER

1. SELECT A SHELL FINISH:

88	Designates olive drab cadmium plated connector shell
91	Designates electroless nickel plated connector shell

Consult Amphenol Aerospace for ordering of composite styles.

2. BASE NUMBER:

628	Base Number

3. SELECT A CODED SHELL SIZE:

See chart below **701-709**, designates size 9-25 shell size. Example: **701**= Size 9 Shell

4. SELECT AN INSERT ARRANGEMENT:

Refer to insert availability chart on page 2-5 and pin-out illustrations on pages 15-29.

-35	Designates Insert Arrangement Number

5. CONTACT TYPE/ALTERNATE KEYING POSITIONS:

Refer to page 118 for alternate rotation letters to use.

P	Designates Pin Contacts in Normal Position
S	Designates Socket Contacts in Normal Position

▬ ⊕ .005 DIA Ⓜ

Shell Size	Coded Shell Size	L Max.	M +.000 −.005	N Dia.	P Max. Panel Thickness	R (TP)	S +.011 −.010	T Thread	V Thread Class 2A (Plated)	SS Dia. +.000 −.016
9	701	.453	.820	.572	.234	.719	.938	.112-40UNJC-3B	.4375-28 UNEF	.662
11	702	.453	.820	.700	.234	.812	1.031	.112-40UNJC-3B	.5625-24 UNEF	.810
13	703	.453	.820	.850	.234	.906	1.125	.112-40UNJC-3B	.6875-24 UNEF	.960
15	704	.453	.820	.975	.234	.969	1.219	.112-40UNJC-3B	.8125-20 UNEF	1.085
17	705	.453	.820	1.100	.234	1.062	1.312	.112-40UNJC-3B	.9375-20 UNEF	1.210
19	706	.453	.820	1.207	.234	1.156	1.438	.112-40UNJC-3B	1.0625-18 UNEF	1.317
21	707	.484	.790	1.332	.204	1.250	1.562	.112-40UNJC-3B	1.1875-18 UNEF	1.442
23	708	.484	.790	1.457	.204	1.375	1.688	.138-32UNJC-3B	1.3125-18 UNEF	1.567
25	709	.484	.790	1.582	.193	1.500	1.812	.138-32UNJC-3B	1.4375-18 UNEF	1.692

All dimensions for reference only.

*Consult Amphenol for more information on ordering connectors with clinch nuts. There is also a 3mm clinch nut available (part number 88/91-628401/409)

Most common options are shown; other options are available.

PCB Box Mounting Receptacle (Back Panel Mounting)

Commercial (LJTP02)

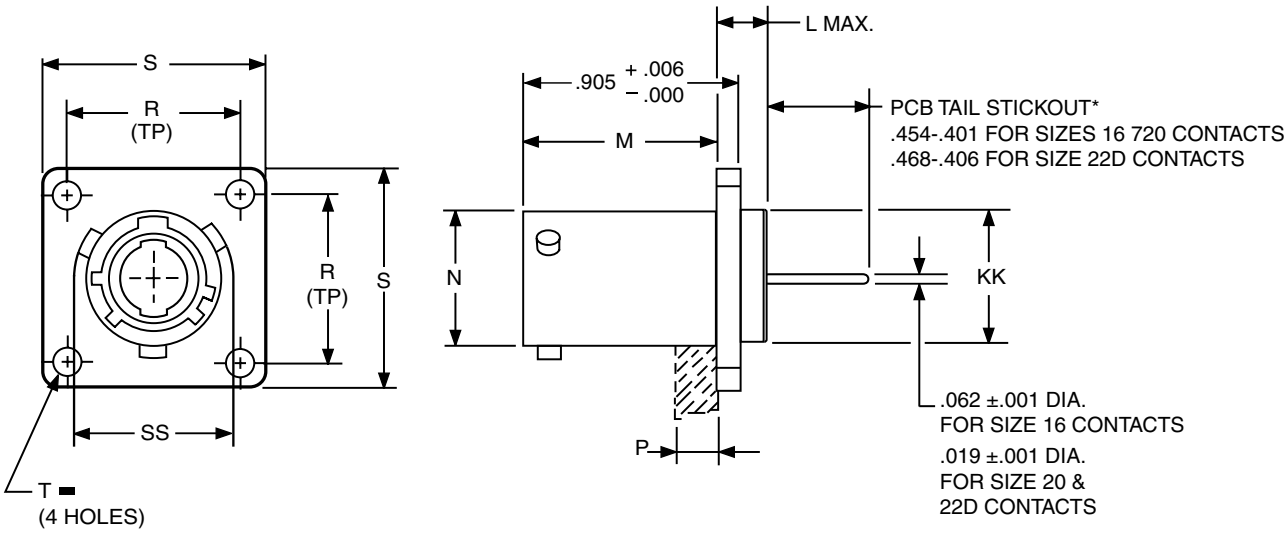

PART # See chart below	1. Shell Finish	2. Base Number	3. Coded Shell Size	4. Insert Arrg.	5. Contact Type/Alt. Keying
	88/91	569	71X	- 35	P

HOW TO ORDER

1. SELECT A SHELL FINISH:

88	Designates olive drab cadmium plated connector shell
91	Designates electroless nickel plated connector shell

Consult Amphenol Aerospace for ordering of composite styles.

2. BASE NUMBER:

569	Base Number

3. SELECT A CODED SHELL SIZE:

See chart below **711-719**, designates size 9-25 shell size. Example: **711**= Size 9 Shell

4. SELECT AN INSERT ARRANGEMENT:

Refer to insert availability chart on page 2-5 and pin-out illustrations on pages 15-29.

-35	Designates Insert Arrangement Number

5. CONTACT TYPE/ALTERNATE KEYING POSITIONS:

Refer to page 118 for alternate rotation letters to use.

P	Designates Pin Contacts in Normal Position
S	Designates Socket Contacts in Normal Position

▬ ⊕ .005 DIA Ⓜ

Shell Size	Coded Shell Size	L Max.	M +.000 −.005	N +.001 −.005	P Max. Panel Thickness	R (TP)	S +.011 −.010	T Dia. ±.005	KK Dia. +.006 −.005	SS Dia. +.000 −.016
9	711	.203	.820	.572	.234	.719	.938	.128	.433	.662
11	712	.203	.820	.700	.234	.812	1.031	.128	.557	.810
13	713	.203	.820	.850	.234	.906	1.125	.128	.676	.960
15	714	.203	.820	.975	.234	.969	1.219	.128	.801	1.085
17	715	.203	.820	1.100	.234	1.062	1.312	.128	.926	1.210
19	716	.203	.820	1.207	.234	1.156	1.438	.128	1.032	1.317
21	717	.234	.790	1.332	.204	1.250	1.562	.128	1.157	1.442
23	718	.234	.790	1.457	.204	1.375	1.688	.147	1.282	1.567
25	719	.234	.790	1.582	.193	1.500	1.812	.147	1.407	1.692

All dimensions for reference only.
Most common options are shown; other options are available.

PCB Box Mounting Receptacle (Back Panel Mounting) (With Clinch Nuts)

Commercial (LJTP02)

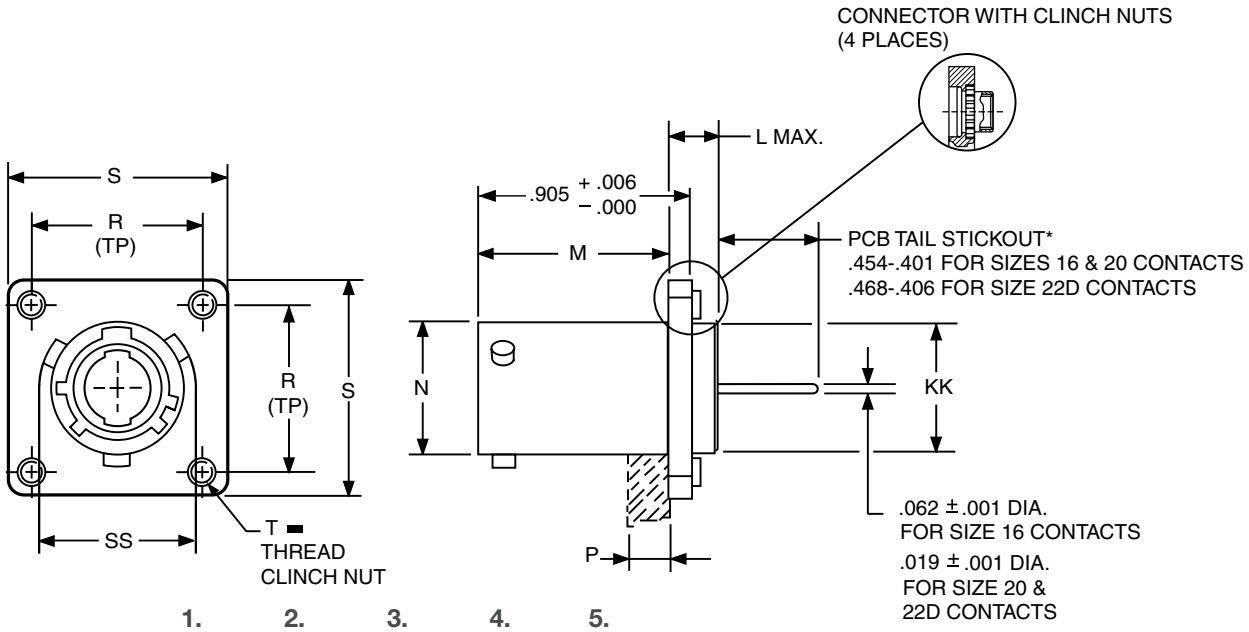

PART # See chart below	1. Shell Finish	2. Base Number	3. Coded Shell Size	4. Insert Arrg.	5. Contact Type/Alt. Keying
	88/91	628	71X	- 35	P

HOW TO ORDER

1. SELECT A SHELL FINISH:

88	Designates olive drab cadmium plated connector shell
91	Designates electroless nickel plated connector shell

Consult Amphenol Aerospace for ordering of composite styles.

2. BASE NUMBER:

628	Base Number

3. SELECT A CODED SHELL SIZE:

See chart below **711-719**, designates size 9-25 shell size. Example: **711** = Size 9 Shell

4. SELECT AN INSERT ARRANGEMENT:

Refer to insert availability chart on page 2-5 and pin-out illustrations on pages 15-29.

-35	Designates Insert Arrangement Number

5. CONTACT TYPE/ALTERNATE KEYING POSITIONS:

Refer to page 118 for alternate rotation letters to use.

P	Designates Pin Contacts in Normal Position
S	Designates Socket Contacts in Normal Position

▬ ⊕ .005 DIA Ⓜ

Shell Size	Coded Shell	L Max.	M +.000 −.005	N +.001 −.005	P Max. Panel Thickness	R (TP)	S +.011 −.010	T Thread	KK Dia. +.006 −.005	SS Dia. +.000 −.016
9	**711**	.203	.820	.572	.234	.719	1.031	.112-40UNJC-3B	.433	.662
11	**712**	.203	.820	.700	.234	.812	1.125	.112-40UNJC-3B	.557	.810
13	**713**	.203	.820	.850	.234	.906	1.172	.112-40UNJC-3B	.676	.960
15	**714**	.203	.820	.975	.234	.969	1.281	.112-40UNJC-3B	.801	1.085
17	**715**	.203	.820	1.100	.234	1.062	1.375	.112-40UNJC-3B	.926	1.210
19	**716**	.203	.820	1.207	.234	1.156	1.469	.112-40UNJC-3B	1.032	1.317
21	**717**	.234	.790	1.332	.204	1.250	1.625	.112-40UNJC-3B	1.157	1.442
23	**718**	.234	.790	1.457	.204	1.375	1.750	.138-32UNJC-3B	1.282	1.567
25	**719**	.234	.790	1.582	.193	1.500	1.875	.138-32UNJC-3B	1.407	1.692

All dimensions for reference only.

*Consult Amphenol for more information on ordering connectors with clinch nuts. There is also a 3mm clinch nut available (part number 88/91-628410/419)

Most common options are shown; other options are available.

PCB Jam Nut Receptacle

Commercial (LJT07)

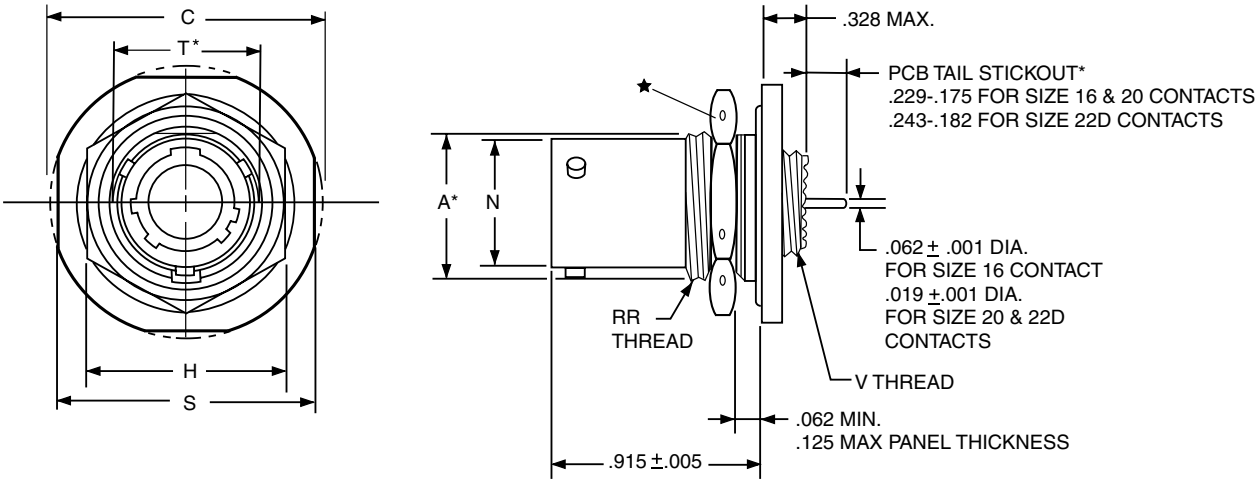

PART # See chart below	1. Shell Finish	2. Base Number	3. Coded Shell Size	4. Insert Arrg.	5. Contact Type/Alt. Keying
	88/91	569	72X	- 35	P

HOW TO ORDER

1. SELECT A SHELL FINISH:

88	Designates olive drab cadmium plated connector shell
91	Designates electroless nickel plated connector shell

Consult Amphenol Aerospace for ordering of composite styles.

2. BASE NUMBER:

569	Base Number

3. SELECT A CODED SHELL SIZE:

See chart below **721-729**, designates size 9-25 shell size.
Example: **721**= Size 9 Shell

4. SELECT AN INSERT ARRANGEMENT:

Refer to insert availability chart on page 2-5 and pin-out illustrations on pages 15-29.

-35	Designates Insert Arrangement Number

5. CONTACT TYPE/ KEYING POSITIONS:

Refer to page 118 for alternate rotation letters to use.

P	Designates Pin Contacts in Normal Position
S	Designates Socket Contacts in Normal Position

Shell Size	Coded Shell	A* +.000 −.010	C Max.	H Hex +.017 −.016	L Max.	N +.001 −.005	S ±.016	T* +.010 −.000	V Thread Class 2A (Plated)	RR Thread Class 2A (Plated)
9	**721**	.669	1.199	.875	.625	.572	1.062	.697	.4375-28 UNEF	.6875-24 UNEF
11	**722**	.769	1.386	1.000	.625	.700	1.250	.822	.5625-24 UNEF	.8125-20 UNEF
13	**723**	.955	1.511	1.188	.625	.850	1.375	1.007	.6875-24 UNEF	1.0000-20 UNEF
15	**724**	1.084	1.636	1.312	.625	.975	1.500	1.134	.8125-20 UNEF	1.1250-18 UNEF
17	**725**	1.208	1.761	1.438	.625	1.100	1.625	1.259	.9375-20 UNEF	1.2500-18 UNEF
19	**726**	1.333	1.949	1.562	.656	1.207	1.812	1.384	1.0625-18 UNEF	1.3750-18 UNEF
21	**727**	1.459	2.073	1.688	.750	1.332	1.938	1.507	1.1875-18 UNEF	1.5000-18 UNEF
23	**728**	1.580	2.199	1.812	.750	1.457	2.062	1.634	1.3125-18 UNEF	1.6250-18 UNEF
25	**729**	1.709	2.323	2.000	.750	1.582	2.188	1.759	1.4375-18 UNEF	1.7500-18 UNS

All dimensions for reference only.
Most common options are shown; other options are available.

★ .059 dia. min. 3 lockwire holes.
Formed lockwire hole design (6 holes) is optional.
* "D" shaped mounting hole dimensions

PCB Hermetic Wall Mounting Receptacle

Commercial (LJT00)

Amphenol Aerospace

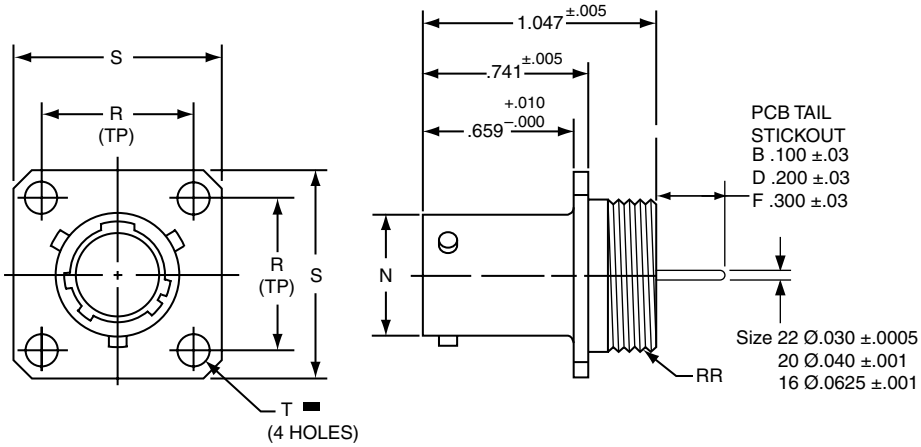

PART # See chart below	1. Base Number	2. Coded Shell Size	3. Insert Arrg.	4. Contact Type/ Alt. Keying Position	5. Shell Finish	6. Tail Length
	10-626	401	-35	P	1	B

HOW TO ORDER

1. BASE NUMBER:

10-626	Base Number for MIL-DTL-38999 Series III Hermetic with PCB Tail

2. SELECT A CODED SHELL SIZE:

See chart below **401-409**, designates size 9-25 shell size.

3. SELECT AN INSERT ARRANGEMENT:

Refer to insert availability chart on page 2-5 and pin-out illustrations on pages 15-29.

-35	Designates Insert Arrangement Number

4. CONTACT TYPE/ALTERNATE KEYING POSITIONS:

Refer to page 118 for alternate rotation letters to use.

P	Designates Pin Contacts in Normal Position
S	Designates Socket Contacts in Normal Position

5. SELECT A SHELL FINISH:

1	Hermetic seal, passivated Stainless Steel, 200°C
2	Hermetic seal, Stainless Steel w/Nickel Plate
3	Carbon Steel w/reflowed tin plate

6. SELECT A TAIL LENGTH:

B	.100±.03
D	.200±.03
F	.300±.03

▬ ⊕ .005 DIA Ⓜ

Shell Size	Part Number	N Dia. +.001 −.005	R TP)	S ±.016	T Dia. ±.005	RR Thread Class 2A
9	10-626**401**-XXX	.572	.719	.938	.128	.6875-24 UNEF
11	**402**-XXX	.700	.812	1.031	.128	.8125-20 UNEF
13	**403**-XXX	.850	.906	1.125	.128	.9375-20 UNEF
15	**404**-XXX	.975	.969	1.219	.128	1.0625-18 UNEF
17	**405**-XXX	1.100	1.062	1.312	.128	1.1875-18 UNEF
19	**406**-XXX	1.207	1.156	1.438	.128	1.3125-18 UNEF
21	**407**-XXX	1.332	1.250	1.562	.128	1.4375-18 UNEF
23	**408**-XXX	1.457	1.375	1.688	.147	1.5625-18 UNEF
25	**409**-XXX	1.582	1.500	1.812	.147	1.6875-18 UNEF

All dimensions for reference only.

PCB Hermetic Jam Nut Receptacle

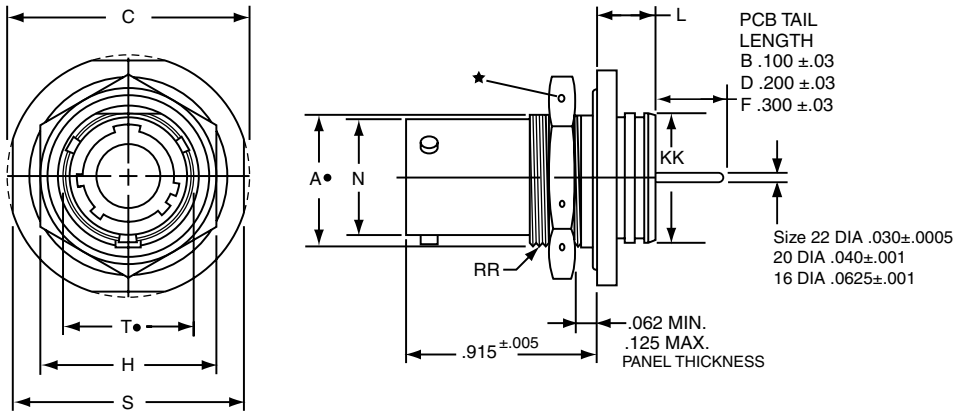

PART # See chart below	1. Base Number	2. Coded Shell Size	3. Insert Arrg.	4. Contact Type/ Alt. Keying Position	5. Shell Finish	6. Tail Length
	10-626	411	-35	P	1	B

HOW TO ORDER

1. BASE NUMBER:

10-626	Base Number for MIL-DTL-38999 Series III Hermetic with PCB Tail

2. SELECT A CODED SHELL SIZE:

See chart below **411-419**, designates size 9-25 shell size. Example: **411** = Size 9 Shell

3. SELECT AN INSERT ARRANGEMENT:

Refer to insert availability chart on page 2-5 and pin-out illustrations on pages 15-29.

-35	Designates Insert Arrangement Number

4. CONTACT TYPE/ KEYING POSITIONS:

Refer to page 118 for alternate rotation letters to use.

P	Designates Pin Contacts in Normal Position
S	Designates Socket Contacts in Normal Position

5. SELECT A SHELL FINISH:

1	Hermetic seal, passivated Stainless Steel, 200°C
2	Hermetic seal, Stainless Steel w/Nickel Plate
3	Carbon Steel w/reflowed tin plate

6. SELECT A TAIL LENGTH

B	.100±.03
D	.200±.03
F	.300±.03

All dimensions for reference only.
Weld mounting hermetic receptacle also available.
Consult Amphenol for availability and dimensions.

Shell Size	Part Number	A+ +.000 –.010	C Max.	H Hex +.017 –.016	L Max.	N +.000 –.005	S ±.016	T+ +.010 –.000	KK +.011 –.000	RR Thread Class 2A (Plated)
9	**10-626411**-XXX	.669	1.199	.875	.297	.572	1.062	.697	.642	.6875-24 UNEF
11	**412**-XXX	.769	1.386	1.000	.297	.700	1.250	.822	.766	.8125-20 UNEF
13	**413**-XXX	.955	1.511	1.188	.297	.850	1.375	1.007	.892	1.0000-20 UNEF
15	**414**-XXX	1.084	1.636	1.312	.297	.975	1.500	1.134	1.018	1.1250-18 UNEF
17	**415**-XXX	1.208	1.761	1.438	.297	1.100	1.625	1.259	1.142	1.2500-18 UNEF
19	**416**-XXX	1.333	1.949	1.562	.328	1.207	1.812	1.384	1.268	1.3750-18 UNEF
21	**417**-XXX	1.459	2.073	1.688	.328	1.332	1.938	1.507	1.392	1.5000-18 UNEF
23	**418**-XXX	1.580	2.199	1.812	.328	1.457	2.062	1.634	1.518	1.6250-18 UNEF
25	**419**-XXX	1.709	2.328	2.000	.328	1.582	2.188	1.759	1.642	1.7500-18 UNS

All dimensions for reference only.

PCB Hermetic Solder Mounting Receptacle

Commercial (LJTI)

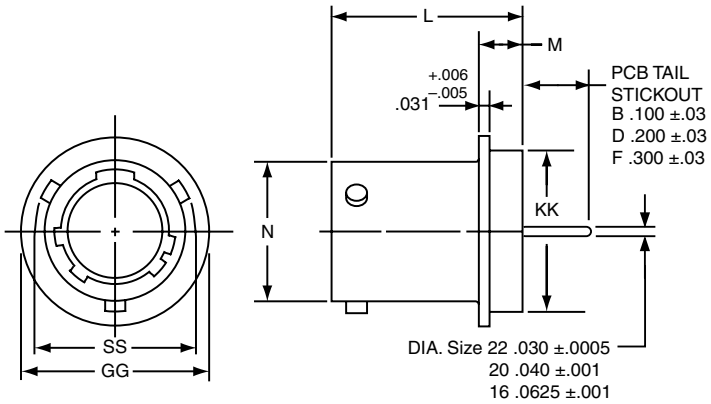

PART # See chart below	1. Base Number	2. Coded Shell Size	3. Insert Arrg.	4. Contact Type/ Alt. Keying Position	5. Shell Finish	6. Tail Length
	10-626	42	-35	P	1	B

HOW TO ORDER

1. BASE NUMBER:

10-626	Base Number for MIL-DTL-38999 Series III Hermetic with PCB Tail

2. SELECT A CODED SHELL SIZE:

See chart below **421-429**, designates size 9-25 shell size. Example: **421** = Size 9 Shell

3. SELECT AN INSERT ARRANGEMENT:

Refer to insert availability chart on page 2-5 and pin-out illustrations on pages 15-29.

-35	Designates Insert Arrangement Number

4. CONTACT TYPE/ALTERNATE KEYING POSITIONS:

Refer to page 118 for alternate rotation letters to use.

P	Designates Pin Contacts in Normal Position
S	Designates Socket Contacts in Normal Position

5. SELECT A SHELL FINISH:

1	Hermetic seal, passivated Stainless Steel, 200°C
2	Hermetic seal, Stainless Steel w/Nickel Plate
3	Carbon Steel w/reflowed tin plate

6. SELECT A TAIL LENGTH:

B	.100±.03
D	.200±.03
F	.300±.03

All dimensions for reference only.
Weld mounting hermetic receptacle also available.
Consult Amphenol for availability and dimensions.

Shell Size	Part Number	N Dia. +.001 –.005	SS Dia. +.000 –.016	L +.011 –.000	M +.006 –.005	GG Dia. +.011 –.010	KK Dia. +.001 –.005
9	10-626421-XXX	.572	.662	.789	.125	.750	.672
11	422-XXX	.700	.810	.789	.125	.844	.781
13	423-XXX	.850	.960	.789	.125	.969	.906
15	424-XXX	.975	1.085	.789	.125	1.094	1.031
17	425-XXX	1.100	1.210	.789	.125	1.218	1.156
19	426-XXX	1.207	1.317	.789	.125	1.312	1.250
21	427-XXX	1.332	1.442	.789	.125	1.438	1.375
23	428-XXX	1.457	1.567	.821	.156	1.563	1.500
25	429-XXX	1.582	1.692	.821	.156	1.688	1.625

Series I, LJT Breakaway Fail Safe

Lanyard Release Plug How to Order, cont.

HOW TO ORDER-MILITARY FAIL SAFE MS27661

1. MS Number	2. Service Class	3. Shell Size	4. Finish	5. Insert Arrg.	6. Contact Style	7. Alternate Position
MS27661	T	17	B	35	P	A

1. MS27661 NUMBER

MS Number designates MIL-DTL-38999, Series I LJT Lanyard Release Plug

2. SELECT A SERVICE CLASS

E	For environmental crimp applications (inactive for new design)
T	For environmental crimp applications with serrations on rear threads of shell

3. SELECT A SHELL SIZE

MIL-DTL-38999, sizes 11 through 25, see chart on page 141.

4. SELECT A FINISH

B	Designates corrosion resistant olive drab cadmium plated aluminum, 500 hour extended salt spray, EMI shielding effectiveness –50dB @ 10 GHz specification min., 175°C
F	Designates electroless nickel plated aluminum, 48 hour salt spray, EMI shielding effectiveness –65dB @10 GHz500 specification min., 200°C

These are standard finishes. Consult Amphenol Aerospace for variations.

5. SELECT AN INSERT ARRANGEMENT

MIL-DTL-38999, see insert identification chart on page 141.

6. SELECT A CONTACT STYLE

P	Designates Lanyard Release plug with pin contacts
S	Designates Lanyard Release plug with socket contacts

7. ALTERNATE KEYING POSITION

For alternate position of connector (to prevent cross-mating) see LJT key/keyway rotation below. (No letter is required for normal)

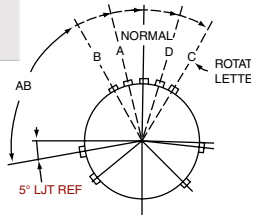

RELATIVE POSSIBLE POSITION OF ROTATED MASTER KEYWAY (front face of receptacle shown)

LJT Key/Keyway Rotation

AB ANGLE OF ROTATION (Degrees)					
Shell Size	Normal	A	B	C	D
9	95°	77°	-	-	113°
11	95°	81°	67°	123°	109°
13	95°	75°	63°	127°	115°
15	95°	74°	61°	129°	116°
17	95°	77°	65°	125°	113°
19	95°	77°	65°	125°	113°
21	95°	77°	65°	125°	113°
23	95°	80°	69°	121°	110°
25	95°	80°	69°	121°	110°

HOW TO ORDER-COMMERCIAL FAIL SAFE 88-5388 OR 91-5388

1. Finish	2. Connector Type Identification	3. Shell Size & Insert Arrangement	4. Lanyard Length Code	5. Contact Type Alternate Rotation of Insert
88	5388	29	40	P

1. SELECT A FINISH

88	Designates corrosion resistant olive drab cadmium plate over nickel, 500 hour extended salt spray, EMI –50dB @ 10 GHz specification min., 175°C
91	Designates electroless nickel plated aluminum, optimum EMI shielding effectiveness –65dB @ 10 GHz specification min., 48 hour salt spray, 200°C

These are standard finishes. Consult Amphenol Aerospace, Sidney, NY for variations.

2. CONNECTOR TYPE IDENTIFICATION

5388	Designates MIL-DTL-38999, Series I LJT Lanyard Release Plug

3. SELECT A SHELL SIZE & INSERT ARRANGEMENT

Shell sizes are MIL-DTL-38999, Series III from sizes 11 thru 25. The basic part number selected specifies the insert arrangement. See Table I (page 141) for coded part number that correlates to insert arrangement.

4. SELECT A LANYARD LENGTH CODE

See Table II (page 141) for lanyard length code number.

5. SELECT A CONTACT TYPE/ALTERNATE ROTATION OF INSERT

P	Designates Lanyard Release plug with pin contacts
S	Designates Lanyard Release plug with socket contacts

When an alternate position of the connector is required to prevent cross-mating, a different letter (other than P or S) is used. See alternate positioning for LJT (to your left), then convert to Amphenol commercial coding by the following chart below.

Pin Contacts		Socket Contacts	
MS Letter	Amphenol Letter	MS Letter	Amphenol Letter
P	P (normal)	S	S (normal)
PA	E	SA	F
PB	R	SB	T
PC	W	SC	X
PD	Y	SD	Z

Lanyard Release Plug Insert Availability

INSERT AVAILABILITY

Shell Size / Insert Arrangement	Service Rating	Total Contacts	Contact Size						
			22D	20	16	12	12 Coax	8 Coax*	8 Twinax
11-2	I	2			2				
11-35	M	13	13						
11-98	I	6		6					
13-4	I	4			4				
13-8	I	8		8					
13-35	M	22	22						
13-98	I	10		10					
15-5	II	5			5				
15-15	I	15		14	1				
15-18	I	18		18					
15-19	I	19		19					
15-35	M	37	37						
15-97	I	12		8	4				
17-6	I	6				6			
17-8	II	8			8				
17-26	I	26		26					
17-35	M	55	55						
17-99	I	23		21	2				
19-11	II	11			11				
19-32	I	32		32					
19-35	M	66	66						
21-11	I	11				11			
21-16	II	16			16				
21-35	M	79	79						
21-39	I	39		37	2				
21-41	I	41		41					
23-21	II	21			21				
23-35	M	100	100						
23-53	I	53		53					
23-54	M	53	40		9	4			
23-55	I	55		55					
25-4	I	56		48	8				
25-19	I	19				19			
25-20	N	30		10	13		4		3
25-24	I	24			12	12			
25-29	I	29			29				
25-35	M	128	128						
25-43	I	43		23	20				
25-46	I	46		40	4			2*	
25-61	I	61		61					

LJT Lanyard Separation Forces		
Size	T-Straight Plug (lbs. max.)	U-15 Degree Pull (lbs. Max.)
9	Not Available	Not Available
11	15	20
13	20	25
15	25	30
17	30	35
19	35	45
21	45	55
23	55	65
25	65	75

* For RG 180/U and RG 195/U cables only. (Check Amphenol Aerospace, Sidney, NY for other cable applications). For availability of other insert arrangements and accessories consult Amphenol Aerospace.

TABLE I
INSERT ARRANGEMENT CODE

Basic Part Number	MIL-DTL-38999 Insert Arrangement
88/91-538808	11-99
06	11-35
07	11-98
10	13-4
11	13-8
13	13-98
14	13-35
18	15-5
22	15-18
19	15-19
20	15-35
27	17-6
28	17-8
29	17-26
30	17-35
31	17-99
37	19-11
39	19-32
40	19-35
47	21-11
48	21-16
49	21-35
50	21-41
51	21-39
57	23-21
58	23-35
59	23-53
60	23-55
66	25-19
74	25-4
67	25-29
68	25-35
69	25-43
70	25-61
71	25-46
72	25-2

TABLE II
LANYARD LENGTH CODES

Lanyard Length (in.) ±.250	MS	Commercial Code
4.000		40
4.250		41
4.500		42
4.750		43
5.000		50
5.250		51
5.500		52
5.750		53
6.000	No	60
6.250	Code	61
6.500		62
6.750	Std.	63
7.000	Length	70
7.250	6.250	71
7.500		72
7.750		73
8.000		80
8.250		81
8.500		82
8.750		83
9.000		90
9.250		91
9.500		92
9.750		93

Series I, LJT Breakaway Fail Safe

Quick-Disconnect with Axial Pull of Lanyard

Amphenol LJT Breakaway Fail Safe Connectors provide unequaled performance in environments requiring instant disengagement.

Designed to provide quick disconnect of a connector plug and receptacle with an axial pull on the lanyard, the "Breakaway" Fail Safe connector family offers a wide range of electrical and mechanical features:

- Instant decoupling and damage free separation
- Completely intermateable with standard LJT receptacles
- Inventory support commonality through the use of standard insert arrangements and contacts

Breakaway un-mating is initiated by applying a pull force to the lanyard which causes the operating sleeve on the plug to move away from the receptacle. Coupling segments on the plug then move away from the mating receptacle while expanding, thus releasing the receptacle. After completion of the un-mating sequence, spring compression returns the sleeve and segments to their original positions. Un-mating of the plug may also be accomplished by normal rotation of the coupling ring without affecting the breakaway capability.

The LJT Breakaway Fail Safe connector features which provide EMI EMP shielding in excess of MIL-DTL-38999 Series I requirements:

- Solid metal-to-metal coupling
- EMI grounding fingers
- Conductive finishes

Contact Amphenol Aerospace for more information on breakaway, quick-disconnect connectors. Other Amphenol cylindrical families (MIL-DTL-38999 Series III, MIL-DTL-26482, MIL-DTL-83723) also offer breakaway quick-disconnect connectors.

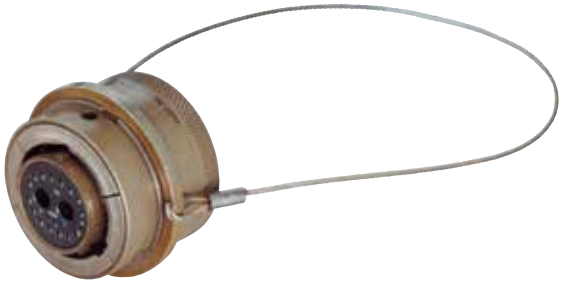

LJT Breakaway Fail Safe

In addition to standard Breakaway connectors, Amphenol also manufactures custom breakaway connectors including those with:

- Increased pull-force capability
- Custom lanyard lengths and backshells
- Low force separation capabilities
- Low insertion/separation force contacts
- Non-cadmium finishes

Custom JT Series Breakaway designs have been developed for special applications; however the LJT Series is recommended over the JT Series for the quick-disconnect breakaway style.

Lanyard Release Plug - Fail Safe

Military (MS27661)
Commercial (LJT 88-5388/91-5388)

To complete order number see page 141.

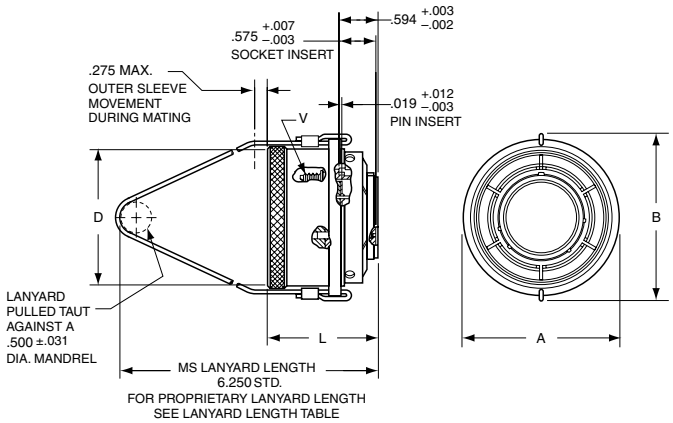

Shell Size	A Dia. Max.	B Max.	D Max. Accessory Dia.	L Max.	V Thread UNEF Class 2A (Plated)
11	1.393	1.797	.740	1.703	.5625-24
13	1.558	1.969	.926	1.703	.6875-24
15	1.669	2.078	1.051	1.703	.8125-20
17	1.797	2.203	1.176	1.703	.9375-20
19	1.926	2.323	1.300	1.703	1.0625-18
21	2.054	2.469	1.426	1.703	1.1875-18
23	2.183	2.594	1.551	1.703	1.3125-18
25	2.293	2.703	1.676	1.766	1.4375-18

All dimensions for reference only.

Amphenol Aerospace

D

TABLE OF CONTENTS FOR SECTION D

Features, Specification 144
How to Order 145
Insert Availability 146

SJT SHELL STYLES:

Crimp Wall Mounting Receptacle SJT00RT. . . . 147
Crimp Wall Mount Receptacle Back Panel Mount SJTP00RT 147
Crimp Box Mounting Receptacle for Back Panel Mounting SJTP02RE 148
Crimp Jam Nut Receptacle SJT07RT 148
Crimp Straight Plug SJT06RT 149
Crimp Straight Plug with Grounding Fingers . . . 149
Hermetic Solder Mounting Receptacle SJTIY . . . 150
Hermetic Jam Nut Receptacle SJT07Y 150

ACCESSORIES:

Section F 165-184

Amphenol SJT

Features, Specifications

Amphenol® SJT connectors combine unique design features of the scoop-proof LJT series within standard mounting dimensions of JT types. Available in a wide range of shell sizes, finishes, insert arrangements and accessories.

Components

Standard connectors use aluminum shells. Standard plating on shell components is cadmium over nickel with many optional finishes available. A dependable 5-key/keyway shell polarization with bayonet-lock coupling is incorporated to aid and assure positive mating.

The insert material is a high-temperature, rigid dielectric polymer providing excellent electrical characteristics. A fluorinated silicone interfacial seal is featured on the mating face of the pin inserts, assuring complete electrical isolation of the pins when connector halves are mated. Contrasting letter or number designations are used on the insert faces. A main joint gasket is installed in the receptacles for moisture sealing between connector halves.

Serrated and threaded shells, with a moisture sealing pilot for back shells, accept a wide range of accessories. Hermetic seal receptacles are available in carbon steel or stainless steel shells.

Contacts

Rear insertable/rear release crimp contacts are standard in SJT connectors. Power contacts are available in sizes 10, 12, 16, 20, 22M and 22D. All socket contacts are probe proof. Standard contact plating is 50 mμ minimum gold. Coaxial contacts are available in sizes 8, 12 and 16 to accommodate a wide range of coaxial cables; see Coaxial contact information in the High Speed Contact section of this catalog. Size 8 and 12 Twinax contacts are also available; see Concentric Twinax contact information in the High Speed Contact section of this catalog.

Optional Features

Special adaptations of the SJT are available for hermetic and high temperature applications. The SJTS high temperature connector is rated at 392°F. SJT hermetic receptacles are described on page 150.

Specials

Special types are available, such as connectors less contacts and circular rack and panel connectors with solderless wrap contacts. A complete listing of connector types, shell styles and service classes appears on page 146, How to Order. For further information on special application requirements, contact an Amphenol Sales Person or visit www.amphenol-aerospace.com for more information.

SJT features:

- 100% scoop-proof design – basic MIL-DTL-38999 Series I* lengths
- Standard mounting dimensions – MIL-DTL-38999, Series II** dimensions
- Compliance with European Specifications – PAN6433-2, LN29729, VG96912

CONTACT RATING

Contact Size	Test Current		Maximum Millivolt Drop Crimp*	Maximum Millivolt Drop Hermetic
	Standard	Hermetic		
22M	3	2	45	60
22D	5	3	73	85
22	5	3	73	85
20	7.5	5	55	60
16	13	10	49	85
12	23	17	42	85
10 Power	33	NA	33	NA

* When using silver plated wire

Contact Size	Crimp Well Data	
	Well Diameter	Min. Well Depth
22M	.028 ±.001	.141
22D	.0345 ±.0010	.141
22	.0365 ±.0010	.141
20	.047 ±.001	.209
16	.067 ±.001	.209
12	.100 ±.002	.209
10 (Power)	.137 ±.002	.355

SERVICE RATING**

Service Rating	Suggested Operating Voltage (Sea Level)		Test Voltage (Sea Level)	Test Voltage 50,000 Ft.	Test Voltage 70,000 Ft.	Test Voltage 110,000 Ft.
	AC (RMS)	DC				
M	400	550	1300 VRMS	550 VRMS	350 VRMS	200 VRMS
N	300	450	1000 VRMS	400 VRMS	260 VRMS	200 VRMS
I	600	850	1800 VRMS	600 VRMS	400 VRMS	200 VRMS
II	900	1250	2300 VRMS	800 VRMS	500 VRMS	200 VRMS

** Please note that the establishment of electrical safety factors is left entirely in the designer's hands, since he is in the best possible position to know what peak voltage, switching surges, transients, etc., can be expected in a particular circuit.

Amphenol Aerospace

How to Order, Alternate Rotations

1. Connector Type SJT, Shell Style, Service Class	2. Shell Size-Insert Arrangement.	3. Contact Type	4. Alternate Keying Position	5. Finish Variations Suffix
SJT00RT	18-66	P	A	(XXX)

CONNECTOR TYPE & STYLE		SJT SERIES: Standard Scoop-Proof Junior Tri-Lock	High Temperature	Back Panel Mounted
Receptacle Crimp	Wall Mounting Receptacle (without rear accessories)	SJT00RT		SJTP00RT
Receptacle Crimp	Box Mounting Receptacle (with grommet & nut) (can be supplied with strain relief intergral)			SJTP02RE
Receptacle Crimp	Jam Nut Receptacle (without rear accessories)	SJT07RT		
Plugs	Straight Plug	SJT06RT		
Plugs	Straight Plug with Grounding Fingers	SJTG06RT		
Fused compression glass sealed inserts. Leakage rate less than 1.0x10-6 cc/sec at 15 psi differential; with interfacial seal.				
Hermetic	Jam Nut Receptacle	SJT07Y		
Hermetic	Solder Mounting Receptacle	SJTIY		

2. SHELL SIZE & INSERT ARRANGEMENT
SEE PAGE 146

First number represents Shell Size, second number is the Insert Arrangement.

3. CONTACT TYPE

P	Pin Contacts
S	Socket Contacts

4. ALTERNATE KEYING POSITION

A plug with a given rotation letter will mate with a receptacle with the same rotation letter. The AB angle for a given connector is the same whether it contains pins or sockets. Inserts are not rotated in conjunction with the master key/keyway.

AB angles shown are viewed from the front face of the connector. A receptacle is shown below. The angles for the plug are exactly the same, except the direction of rotation is opposite of that shown for the receptacle.

KEY/KEYWAY ROTATION
AB ANGLE OF ROTATION (DEGREES)

Shell Size	Normal	A	B	C	D
8	95				
10	95	81	67	123	109
12	95	75	63	127	115
14	95	74	61	129	116
16	95	77	65	125	113
18	95	77	65	125	113
20	95	77	65	125	113
22	95	80	69	121	110
24	95	80	69	121	110

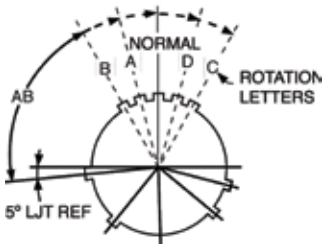

RELATIVE POSSIBLE POSITION OF ROTATED MASTER KEYWAY (front face of receptacle shown)

5. FINISH VARIATION SUFFIX

Finish	Suffix
Aluminum Shell Components Non-Hermetic	SJT/SJTG
Bright Cadmium Plated Nickel Base	Blank Default
Anodic Coating (Alumilite)	(005)
Chromate Treated (Iridite 14-2)	(011)
Olive Drab Cadmium Plate Nickel Base	(014)
Electroless Nickel Coating	(023)
Hermetic Connectors	
Carbon Steel Shell, Tin Plated Shell and Contacts	SJT( )Y
Stainless Steel Shell, Gold Plated Contacts	Consult Amphenol

SJT

Insert Availability and Identification

					Contact Size									
Shell Size	Crimp	Hermetics* Class Y	Service Rating	Total Contacts	22D	22M	22	20	16	12	12 (Coax)	10 (Power)	8 (Coax)	8††† (Twinax)
8-6	X		M	6		6								
8-35	X		M	6	6									
8-44	X		M	4			4							
8-98	X		I	3				3						
10-2	X		I	2					2					
10-4	▯		I	4				4						
10-5	X		I	5				5						
10-13	X		M	13		13								
10-35	X		M	13	13									
10-98	X		I	6				6						
12-4	X		I	4					4					
12-8	X		I	8				8						
12-22	X		M	22		22								
12-35	X		M	22	22									
12-98	X	X	I	10				10						
14-5	X		II	5					5					
14-15	X		I	15				14	1					
14-18	X		I	18				18						
14-19	X	X	I	19				19						
14-35	X	X	M	37	37									
14-37	X	X	M	37		37								
14-97	X		I	12				8	4					
16-2	▯		M	39	38									1**
16-6	X		I	6						6				
16-8	X		II	8					8					
16-13	▯		I	13					13					
16-26	X		I	26				26						
16-35	X		M	55	55									
16-42	X		M	42			42							
16-55	X		M	55		55								
16-99	X	X	I	23				21	2					
18-11	X		II	11					11					
18-32	X		I	32				32						
18-35	X	X	M	66	66									
18-66	X	X	M	66		66								
20-1	X	X	M	79		79								
20-2	X		M	65			65							
20-11	X		I	11						11				
20-16	X		II	16					16					
20-35	X	X	M	79	79									
20-39	X		I	39				37	2					
20-41	X		I	41				41						
20-75	▯		M	4									4††	
20-79	▯		II	19	17								2†	
22-1	X	X	M	100		100								
22-2	X		M	85			85							
22-21	X		II	21					21					
22-35	X	X	M	100	100									
22-53	X		I	53				53						
24-1	X		M	128		128								
24-2	X		M	100			100							
24-4	X		I	56				48	8					
24-7	X		M	99	97									2**
24-11	▯		N	11				2				9		
24-19	X		I	19						19				
24-20	▯		N	30				10	13***		4			3
24-24	X		I	24					12	12				
24-29	X		I	29					29					
24-35	X		M	128	128									
24-37	X		I	37					37					
24-43	▯		I	43				23	20					
24-46	▯		I	46				40	4				2††	
24-61	X		I	61				61						

▯ Not tooled for 02-RE
* Pin inserts only (contact Amphenol for socket availability).
** twinax contacts for MIL-C-17/176-00002 cable.
*** Two size 16 contacts dedicated to fiber optics. Consult Amphenol or Fiber Optic Section for more information.

† Must be ordered separately
†† Coax Contacts for RG180 or RG195 cable.
††† Size 8 Coax and Twinax are interchangeable.
For availability of size 12 twinax contacts, consult Amphenol Aerospace.

SJT00RT – Crimp

Wall Mounting Receptacle

PART NUMBER BUILDER Page 145

Commercial

SJT00RT

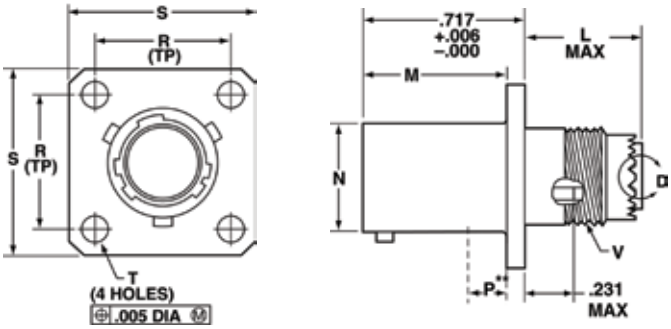

Note: Standard wall mount may be back panel mounted where panel thickness does not exceed these dimensions.
For thicker panel applications, SJTP00RT should be used.

Shell Size	L Max	M +.000 –.005	R (TP)	S ±.016	T ±.005	V Thread Modified: Class 2A UNEF (Plated)	V Thread Modified: Modified Major Dia.		N +.001 –.005	P** Max
8	.500	.632	.594	.812	.120	.4375-28	.421 –	.417	.473	.117
10	.500	.632	.719	.938	.120	.5625-24	.542 –	.538	.590	.117
12	.500	.632	.812	1.031	.120	.6875-24	.667 –	.663	.750	.117
14	.500	.632	.906	1.125	.120	.8125-20	.791 –	.787	.875	.117
16	.500	.632	.969	1.219	.120	.9375-20	.916 –	.912	1.000	.117
18	.500	.632	1.062	1.312	.120	1.0625-18	1.034 –	1.030	1.125	.117
20	.500	.602	1.156	1.438	.120	1.1875-18	1.158 –	1.154	1.250	.087
22	.500	.602	1.250	1.562	.120	1.3125-18	1.283 –	1.279	1.375	.087
24	.550	.602	1.375	1.688	.147	1.4375-18	1.408 –	1.404	1.500	.055

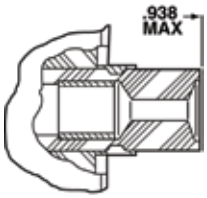

VIEW D ENLARGED FOR COAXIAL USE ONLY

SJTP00RT – Crimp

Wall Mounting Receptacle (Back Panel Mounting)

PART NUMBER BUILDER Page 145

Commercial

SJTP00RT

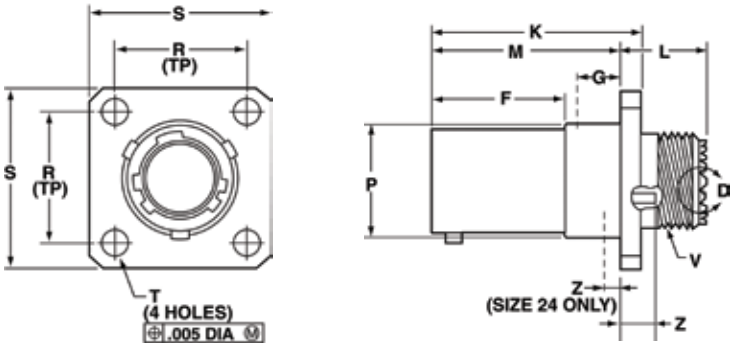

Shell Size	F +.000 –.005	K +.006 –.000	L Max.	M +.000 –.005	R (TP)	S +.011 –.010	T ±.005	Z ±.031	V Thread Class 2A (Plated) UNEF	P Dia. +.001 –.005	W Max.	G Max.
8	.609	.945	.539	.860	.594	.812	.120	.062	.4375-28	.516	.812	.345
10	.609	.945	.539	.860	.719	.938	.120	.062	.5625-24	.633	.812	.345
12	.609	.945	.539	.860	.812	1.031	.120	.062	.6875-24	.802	.812	.345
14	.609	.945	.539	.860	.906	1.125	.120	.062	.8125-20	.927	.812	.345
16	.609	.945	.539	.860	.969	1.219	.120	.062	.9375-20	1.052	.812	.345
18	.609	.945	.539	.860	1.062	1.312	.120	.062	1.0625-18	1.177	.812	.345
20	.609	.945	.539	.860	1.156	1.438	.120	.062	1.1875-18	1.302	.812	.345
22	.609	.945	.539	.860	1.250	1.562	.120	.062	1.3125-18	1.427	.812	.345
24	.750	1.085	.493	1.000	1.375	1.688	.147	.078	1.4375-18	1.552	.781	.452

All dimensions for reference only.

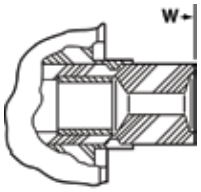

VIEW D ENLARGED FOR COAXIAL USE ONLY

SJTP02RE – Crimp

Box Mounting Receptacle (Back Panel Mounting)

PART NUMBER BUILDER Page 145

Commercial

SJTP02RE

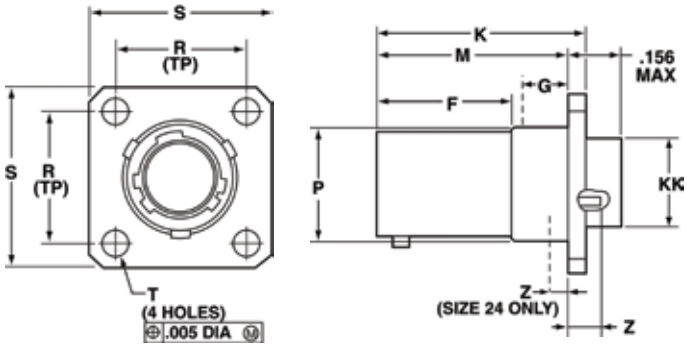

Shell Size	F +.000 –.005	K +.006 –.000	M +.000 –.005	R (TP)	S +.011 –.010	T ±.005	Z ±.031	P Dia. +.001 –.005	KK Dia. +.005 –.002	G Max.
8	.609	.945	.860	.594	.812	.120	.062	.516	.417	.345
10	.609	.945	.860	.719	.938	.120	.062	.633	.538	.345
12	.609	.945	.860	.812	1.031	.120	.062	.802	.663	.345
14	.609	.945	.860	.906	1.125	.120	.062	.927	.787	.345
16	.609	.945	.860	.969	1.219	.120	.062	1.052	.912	.345
18	.609	.945	.860	1.062	1.312	.120	.062	1.177	1.030	.345
20	.609	.945	.860	1.156	1.438	.120	.062	1.302	1.154	.345
22	.609	.945	.860	1.250	1.562	.120	.062	1.427	1.279	.345
24	.750	1.085	1.000	1.375	1.688	.147	.078	1.552	1.404	.452

SJT07RT – Crimp

Jam Nut Receptacle

PART NUMBER BUILDER Page 145

Commercial

SJT07RT

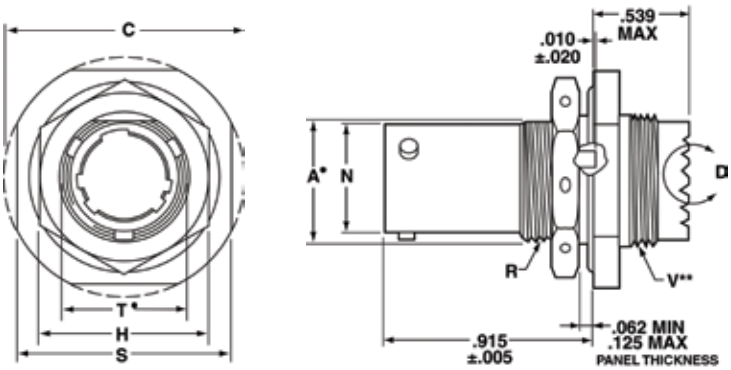

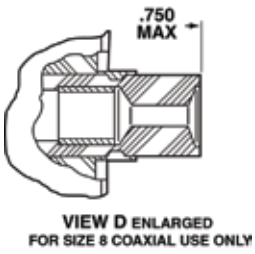

- • "D" shaped panel cut-out dimensions
- ** Oversize threads. Check accessory threads before ordering

Shell Size	A• +.000 –.010	H Hex +.017 –.016	S ±.016	V Thread Class 2A UNEF (Plated)	R Thread Class 2A UNEF (Plated)	N +.001 –.005	C Max.	T• +.010 –.000
8	.542	.750	.938	.5625-24	.5625-24	.473	1.078	.572
10	.669	.875	1.062	.6875-24	.6875-24	.590	1.203	.697
12	.830	1.062	1.250	.8125-20	.8750-20	.750	1.391	.884
14	.955	1.188	1.375	.9375-20	1.0000-20	.875	1.515	1.007
16	1.084	1.312	1.500	1.0625-18	1.1250-18	1.000	1.641	1.134
18	1.208	1.438	1.625	1.1875-18	1.2500-18	1.125	1.766	1.259
20	1.333	1.562	1.812	1.3125-18	1.3750-18	1.250	1.953	1.384
22	1.459	1.688	1.938	1.4375-18	1.5000-18	1.375	2.078	1.507
24	1.580	1.812	2.062	1.4375-18	1.6250-18	1.500	2.203	1.634

All dimensions for reference only.

SJT06RT/SJTG06RT – Crimp

Straight Plug/Straight Plug (with Grounding Fingers)

PART NUMBER BUILDER Page 145

Commercial

SJT06RT
SJTG06RT

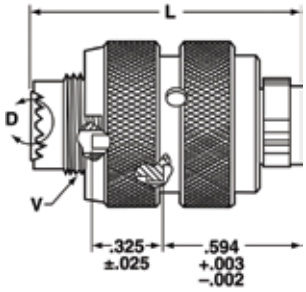

SJT06RT

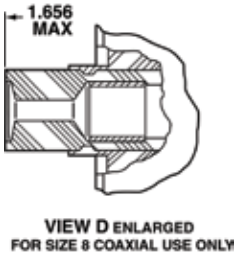

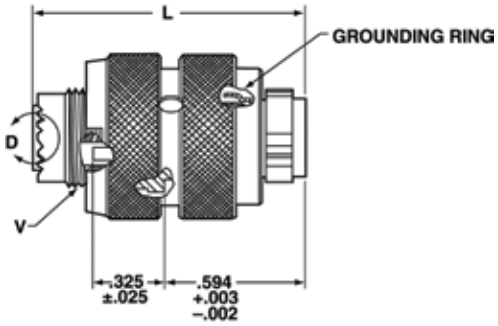

SJTG06RT

Shell Size	L Max	Q Dia. Max.	V Thread Class 2A UNEF (Plated)	V Thread Modified Major Dia.	
8	1.219	.734	.4375-28	.421 –	.417
10	1.219	.844	.5625-24	.542 –	.538
12	1.219	1.016	.6875-24	.667 –	.663
14	1.219	1.141	.8125-20	.791 –	.787
16	1.219	1.265	.9375-20	.916 –	.912
18	1.219	1.391	1.0625-18	1.034 –	1.030
20	1.219	1.500	1.1875-18	1.158 –	1.154
22	1.219	1.625	1.3125-18	1.283 –	1.279
24	1.258	1.750	1.4375-18	1.408 –	1.404

All dimensions for reference only.

SJTIY – Hermetic

Solder Mounting Receptacle

PART NUMBER BUILDER Page 145

Commercial

SJTIY

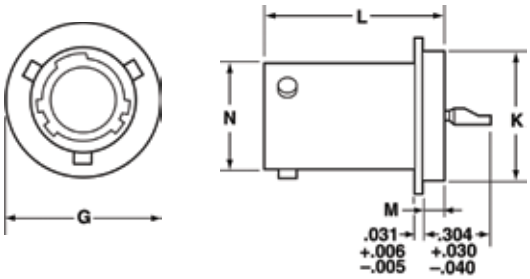

Shell Size	L +.011 –.000	M +.006 –.005	G Dia. +.011 –.010	K Dia. +.001 –.005	N +.001 –.005
8	.789	.125	.687	.562	.473
10	.789	.125	.797	.672	.590
12	.789	.125	.906	.781	.750
14	.789	.125	1.031	.906	.875
16	.789	.125	1.156	1.031	1.000
18	.789	.125	1.281	1.156	1.125
20	.789	.125	1.375	1.250	1.250
22	.821	.156	1.500	1.375	1.375
24	.821	.156	1.625	1.500	1.500

SJT07Y – Hermetic

Jam Nut Receptacle

PART NUMBER BUILDER Page 145

Commercial

SJT07Y

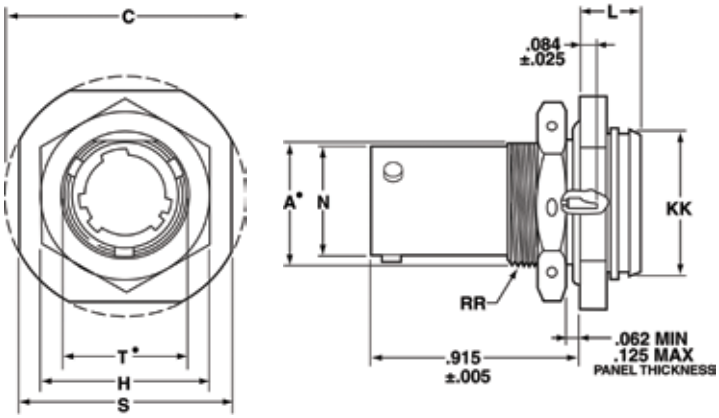

- "D" shaped panel cut-out dimensions

Shell Size	N +.001 –.005	C Max.	A• +.000 –.010	L Max.	H Hex +.017 –.016	S ±.016	KK +.011 –.000	RR Thread Class 2A UNEF (Plated)	T• +.010 –.000
8	.473	1.078	.542	.297	.750	.938	.642	.5625-24	.572
10	.590	1.203	.669	.297	.875	1.062	.766	.6875-24	.697
12	.750	1.391	.830	.297	1.062	1.250	.892	.8750-20	.884
14	.875	1.515	.955	.297	1.188	1.375	1.018	1.0000-20	1.007
16	1.000	1.641	1.084	.297	1.312	1.500	1.142	1.1250-18	1.134
18	1.125	1.766	1.208	.328	1.438	1.625	1.268	1.2500-18	1.259
20	1.250	1.953	1.333	.328	1.562	1.812	1.392	1.3750-18	1.384
22	1.375	2.078	1.459	.328	1.688	1.938	1.518	1.5000-18	1.507
24	1.500	2.203	1.580	.328	1.812	2.062	1.642	1.6250-18	1.634

All dimensions for reference only.

Amphenol Aerospace

E

TABLE OF CONTENTS FOR SECTION E

Design Features 152
Specifications, Alternate Positioning 153
Insert Availability 154
Insert Arrangements 155-156
How to Order 157

SJT SHELL STYLES:

AJ6/AS6 Straight Plug 158
AJ7H/ AS7H Hermetic Jam Nut Receptacle . . . 159
AJ7/ AS7 Jam Nut Receptacle 160
AJOH Hermetic Square Flange Receptacle 161

ACCESSORIES/INSTALLATION SECTION F:

Protection Caps 162
Installation Instructions/ Application Tools 163
Contact Installation 164

Aquacon Immersible Connectors

Design Features

The Amphenol® Aquacon Series of connectors has been designed to provide maximum service in oceanic or fluid immersion applications.

The AJ Aquacon offers the following features:

- 1500 PSI Capability
- "O" Ring Sealing, Thread
- Threaded Coupling
- Visual Mating Indication
- Design Flexibility

STRAIGHT PLUG
AJ6 / AS6

A specially designed aluminum bronze coupling nut and type 316 stainless steel shells resist corrosion and provide a pressure withstanding connector. Positive threaded coupling. "O" rings, and a color band visual indicator assure sealing and proper mating. A rear accessory thread provides for the use of EMI hardware or molding adapters.

HERMETIC
JAM NUT RECEPTACLE
AJ7H/AS7H

NON-HERMETIC
JAM NUT RECEPTACLE
AJ7 / AS7

Aquacon Connectors are available in a straight plug and two receptacle styles (see photos at right), with numerous MIL-DTL-38999 insert patterns

AJ Aquacons use JT (38999 type) inserts that incorporate contact sizes 22D, 22M, 22, 20 or 16. AS Aquacons use SJT (38999 type) inserts that incorporate size 12 contacts.

Hermetically sealed (1 X 10^{-6} cc/sec leakage rate) arrangements are also available.

HERMETIC
SQUARE FLANGE
RECEPTACLE
AJ0H

DESIGN FEATURES OF AQUACON SERIES CONNECTORS

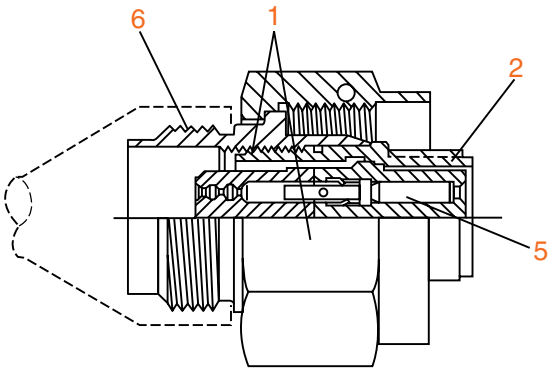

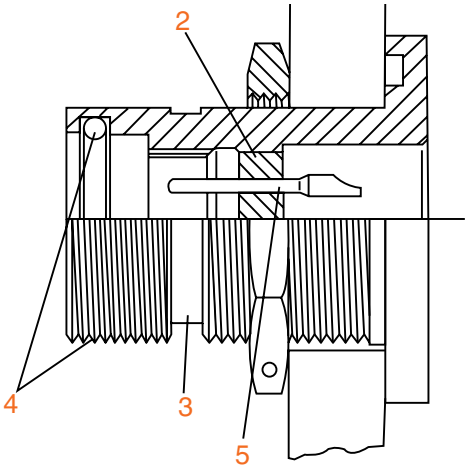

1. Corrosion resistant aluminum bronze coupling nut and stainless steel sleeve
2. Hermetic and non-hermetic inserts in MIL-DTL-38999 patterns. Glass or hard dielectric material.
3. Visual mating indicator
4. 1500 PSI sealing capability assured by threaded coupling and "O" ring
5. Pin or socket contacts in either plug or receptacle
6. Environmental resistant molded cable terminations with or without EMI accessory

Specifications, Alternate Positioning

AQUACON CONTACT RATINGS

Contact Size	Test Current		Maximum Millivolt Drop			Crimp Well Data		Solder Well Data		
	Standard	Hermetic	Crimp	Solder	Solder Hermetic	Diameter	Depth	Diameter		Depth
22M	3	2	30	20	60	.029 ±.001	.141	.029	+.004 –.000	.094
22D	5	–	40	–	–	.0345 ±.001	.141	–		–
22	5	3	40	20	85	.0365 ±.001	.141	.036	+.004 –.000	.094
20	7.5	5	35	20	60	.047 ±.001	.209	.044	+.004 –.000	.125
16	13	10	25	20	85	.067 ±.001	.209	.078	+.004 –.002	.141
12	23	17	25	20	85	.100 ±.002	.209	.116 ±.004		.151

AQUACON SERVICE RATINGS

Service Rating	Suggested Operating Voltage (Sea Level)	
	AC (RMS)	DC
M	400	550
I	600	850
II	900	1250

The establishment of electrical safety factors is left entirely in the designer's hands, as he can best determine what peak voltage, swtiching surges, transients, etc. can be expected in a particular circuit.

ALTERNATE POSITIONING

Alternate positioning of connectors allows connectors with identical insert arrangements to be mounted side by side by providing a positive means of eliminating inadvertent cross-mating or cross- plugging.

Alternate positioning of Aquacon Series is achieved by a rotation of the master key/keyway, relative to the insert, as part of the shell manufacturing operation.

Recommended practice is to use alternate position inserts only when necessary.

AQUACON MASTER KEY/KEYWAY ROTATION

Shell Size	AB Angle of Rotation (Degrees)				
	Normal	A	B	C	D
8	100	82			118
10	100	86	72	128	114
12	100	80	68	132	120
14	100	79	66	134	121
16	100	82	70	130	118
18	100	82	70	130	118
20	100	82	70	130	118
22	100	85	74	126	115
24	100	85	74	126	115

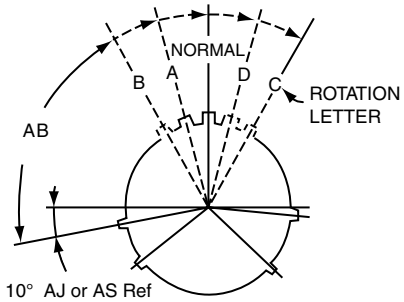

RELATIVE POSSIBLE POSITION OF ROTATED MASTER KEYWAY

(FRONT FACE OF AJ or AS RECEPTACLE SHOWN)

Aquacon Series

Insert Availability

Aquacon Shell Size	Solder	Crimp	Hermetic*	Service Rating**	Total Contacts	Contact Size					
						22D	22M	22	20	16	12
8-3	X		X	M	3				3		
8-6	X	X	X	M	6		6				
8-35		X	X	M	6	6					
8-44		X		M	4			4			
8-98		X	X	I	3				3		
10-5	X	X	X	I	5				5		
10-13	X	X	X	M	13		13				
10-35		X	X	M	13	13					
10-98	X	X	X	I	6				6		
12-3	X	X	X	II	3					3	
12-8	X	X	X	I	8				8		
12-35		X	X	M	22	22					
12-98	X	X	X	I	10				10		
14-5	X	X	X	II	5					5	
14-15	X	X		I	15				14	1	
14-18	X	X	X	I	18				18		
14-35		X	X	M	37	37					
14-37	X	X	X	M	37		37				
16-6†		X	X	I	6						6
16-8	X	X	X	II	8					8	
16-26	X	X	X	I	26				26		
16-35		X	X	M	55	55					
16-55	X	X	X	M	55		55				
18-11	X	X		II	11					11	
18-32	X	X	X	I	32				32		
18-35		X	X	M	66	66					
18-66	X	X	X	M	66		66				
20-1		X		M	79		79				
20-2		X		M	65			65			
20-16	X	X	X	II	16					16	
20-35		X		M	79	79					
20-39	X	X		I	39				37	2	
20-41	X	X	X	I	41				41		
22-2	X	X		M	85			85			
22-21	X	X	X	II	21					21	
22-32	X			I	32				32		
22-35		X		M	100	100					
22-55	X	X	X	I	55				55		
24-19†		X	X	I	19						19
24-24†		X		I	24					12	12
24-35		X		M	128	128					
24-61	X	X		I	61				61		

* Tooled for pin inserts only (contact Amphenol for socket availability).

** See specifications

† AS Aquacon version - these arrangements use SJT (38999 type) patterns that incorporate size 12 contacts. See how to order page 157.

Additional insert arrangements may be made available upon request.

Insert Arrangements

Front face of pin inserts illustrated

Insert Arrangement	8-3	8-6	8-35	8-44	8-98	10-5	10-13	10-35
Service Rating	M	M	M	M	I	I	M	M
Number of Contacts	3	6	6	4	3	5	13	13
Contact Size	20	22M	22D	22	20	20	22M	22D

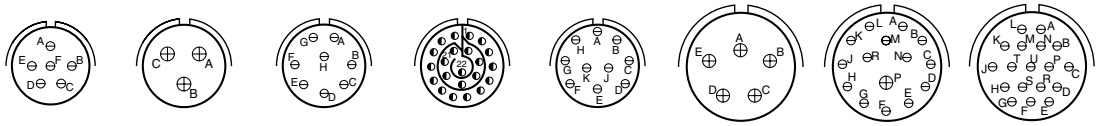

Insert Arrangement	10-98	12-3	12-8	12-35	12-98	14-5	14-15		14-18
Service Rating	I	II	I	M	I	II	I		I
Number of Contacts	6	3	8	22	10	5	14	1	18
Contact Size	20	16	20	22D	20	16	20	16	20

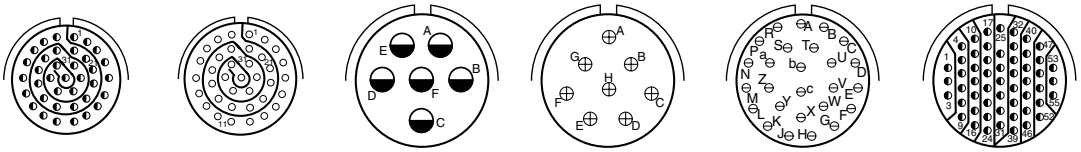

Insert Arrangement	14-35	14-37	16-6†	16-8	16-26	16-35
Service Rating	M	M	I	II	I	M
Number of Contacts	37	37	6	8	26	55
Contact Size	22D	22M	12	16	20	22D

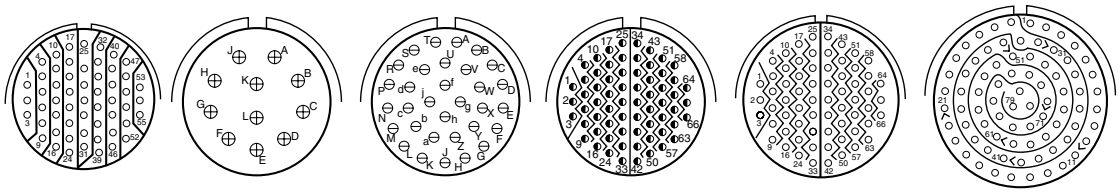

Insert Arrangement	16-55	18-11	18-32	18-35	18-66	20-1
Service Rating	M	II	I	M	M	M
Number of Contacts	55	11	32	66	66	79
Contact Size	22M	16	20	22D	22M	22M

See page 153 for service ratings and contact sizes.

† AS Aquacon version - uses an SJT (38999 type) pattern with size 12 contacts. See how to order page 157.

CONTACT LEGEND

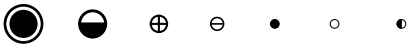

8 12 16 20 22 22M 22D

AJ Aquacon

Insert Arrangements

Front face of pin inserts illustrated

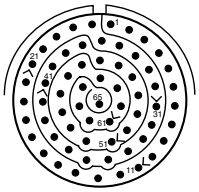
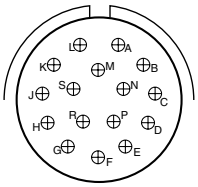
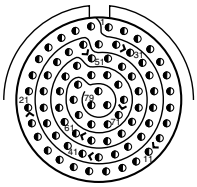
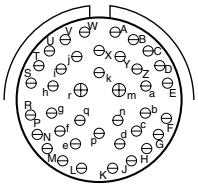
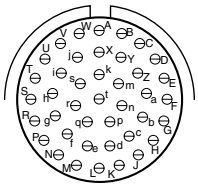

Insert Arrangement	20-2	20-16	20-35	20-39		20-41
Service Rating	M	II	M	I		I
Number of Contacts	65	16	79	37	2	41
Contact Size	22	16	22D	20	16	20

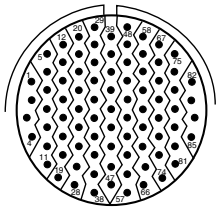
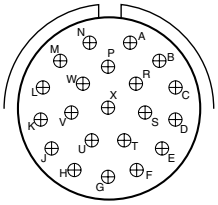
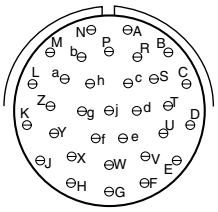
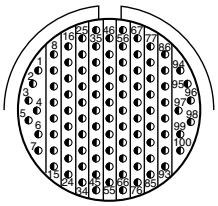
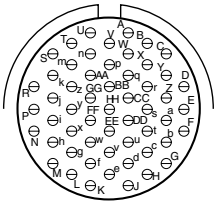

Insert Arrangement	22-2	22-21	22-32	22-35	22-55
Service Rating	M	II	I	M	I
Number of Contacts	85	21	32	100	55
Contact Size	22	16	20	22D	20

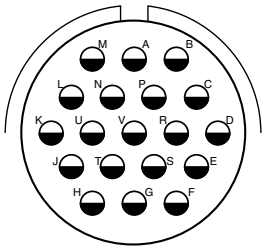
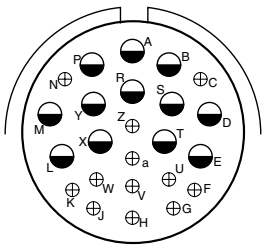
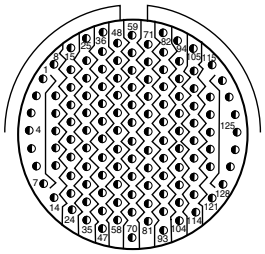
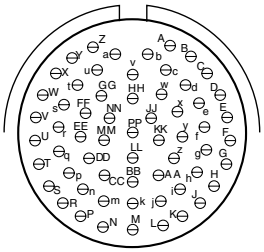

Insert Arrangement	24-19†	24-24†		24-35	24-61
Service Rating	I	I		M	I
Number of Contacts	19	12	12	128	61
Contact Size	12	16	12	22D	20

See page 153 for service ratings and contact sizes.
† AS Aquacon version - uses an SJT (38999 type) pattern with size 12 contacts. See how to order page 157.

CONTACT LEGEND

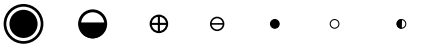

8 12 16 20 22 22M 22D

How to Order

1. Connector & Shell Style	2. Contact Type	3. Shell Size – Insert Arrangement	4. Contact Configuration	5. Insert Rotation	6. Special Variation
AJ6	R -	20-41	S	A	(445)

CONNECTOR TYPE & STYLE		AQUACON IMMERSIBLE CONNECTORS: Aquacon with JT (38999 Type) Inserts	AQUACON IMMERSIBLE CONNECTORS: Aquacon with SJT (38999 Type) inserts- size 12 contacts only
Receptacle Crimp	Jam Nut Receptacle	AJ7	AS7
Plugs	Straight Plug	AJ6	AS6
Fused compression glass sealed inserts. Leakage rate less than 1.0x10-6 cc/sec at 15 psi differential; with interfacial seal.			
Hermetic	Jam Nut Receptacle	AJ7	AS7
Hermetic	Square Flange	AJ0	

2. CONTACT TYPE

Receptacle	
C	Non-Removable Solder Termination
R	Removable Crimp Termination
H	Hermetic (Glass Seal) Solder Termination (Receptacles only)
Plug	
C	Non-Removable Solder Termination

5. ALTERNATE POSITIONING

Alternate positioning of Aquacon Series is achieved by a rotation of the master key/keyway, relative to the insert, as part of the shell manufacturing operation.
Recommended practice is to use alternate position inserts only when necessary.

AQUACON MASTER KEY/KEYWAY ROTATION

Shell Size	AB Angle of Rotation (Degrees)				
	Normal	A	B	C	D
8	100	82			118
10	100	86	72	128	114
12	100	80	68	132	120
14	100	79	66	134	121
16	100	82	70	130	118
18	100	82	70	130	118
20	100	82	70	130	118
22	100	85	74	126	115
24	100	85	74	126	115

3. SELECT A SHELL SIZE & INSERT ARRANGEMENT SEE PAGES 2-5

Shell Size & Insert Arrangements are on pages 2-5. First number represents Shell Size, second number is the Insert Arrangement.

4. CONTACTS

P	Pin Contacts
S	Socket Contacts

Hermetics are available only in pin contacts.

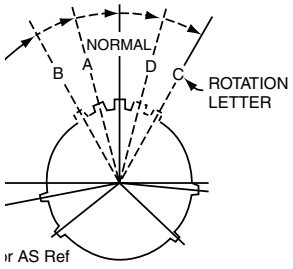

ır AS Ref

LATIVE POSSIBLE POSITION OF ROTATED MASTER KEYWAY

ſ FACE OF AJ or AS RECEPTACLE SHOWN)

6. SPECIAL VARIATIONS

(168)	Rear Accessory Thread for Non-Hermetic Jam Nut Receptacle only.
(445)	Hex Coupling and Rear Accessory Threads for Straight Plug only.

Consult Amphenol Aerospace for other options and special variations available.
See how to order protection caps on page 162.

AJ6 / AS6 Aquacon

Straight Plug

PART NUMBER BUILDER Page 157

Commercial

AJ6X-
AS6X-

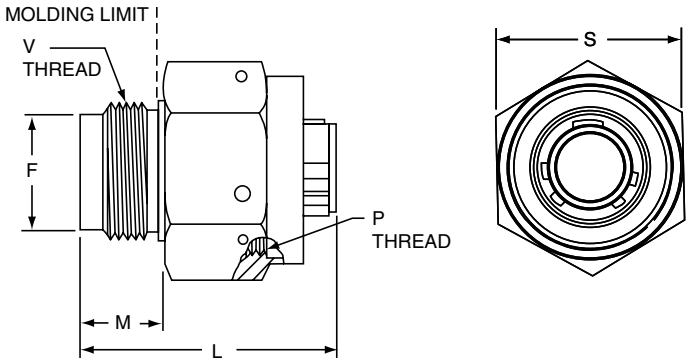

AJ6X-XX-XXX(445)

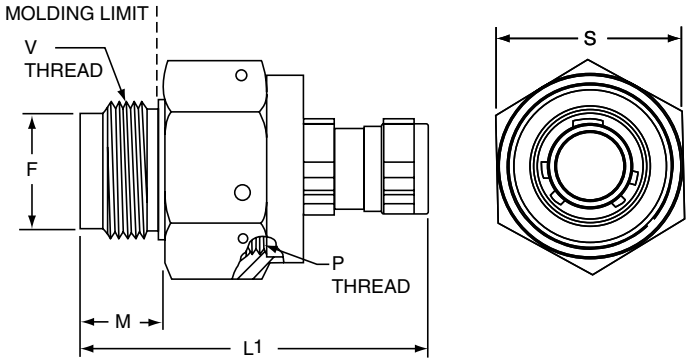

AS6X-XX-XXX(445)

AJ Aquacons use JT (38999 type) inserts that incorporate contact sizes 22D, 22M, 22, 20 or 16. AS Aquacons use SJT (38999 type) inserts that incorporate size 12 contacts

Shell Size	F Dia. +.000 –.005	L Max. (AJ)	L1 Max. (AS)	M ±.010	P Thread Class 2B	S Hex ±.016	V Thread Class 2A UNEF
8	.477	1.067	1.430	.360	.750-20 UNEF	.875	.5625-24
10	.602	1.067	1.430	.360	.875-20 UNEF	1.000	.6875-24
12	.727	1.062	1.430	.360	1.000-20 UNEF	1.125	.8125-20
14	.852	1.062	1.430	.360	1.125-18 UNEF	1.250	.9375-20
16	.977	1.062	1.430	.360	1.250-18 UNEF	1.375	1.0625-18
18	1.102	1.062	1.430	.360	1.375-18 UNEF	1.500	1.1875-18
20	1.227	1.312	1.680	.610	1.500-18 UNEF	1.625	1.3125-18
22	1.352	1.312	1.680	.610	1.625-18 UNEF	1.750	1.4375-18
24	1.477	1.312	1.680	.610	1.750-18 UNS	1.875	1.5625-18

All dimensions for reference only.

AJ7H / AS7H Aquacon

Hermetic Jam Nut Receptacle

PART NUMBER BUILDER Page 157

Commercial

AJ7H-
AS7H-

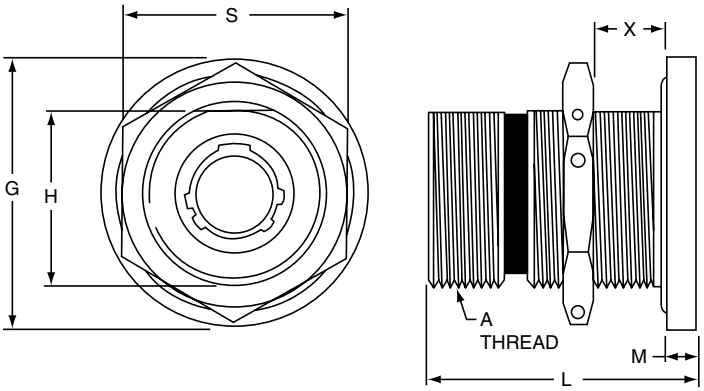

AJ7H-XX-XXX(XXX)

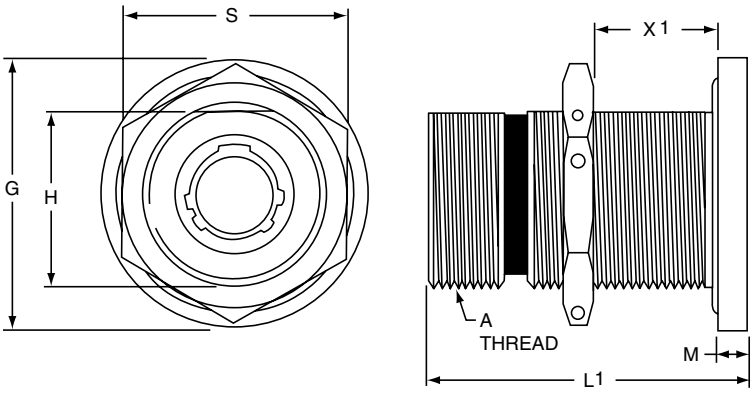

AS7H-XX-XXX(XXX)

AJ Aquacons use JT (38999 type) inserts that incorporate contact sizes 22D, 22M, 22, 20 or 16. AS Aquacons use SJT (38999 type) inserts that incorporate size 12 contacts

Shell Size	A Thread Class 2A	G Dia.	H +.000 –.000	L ±.010 (Hermetic AJ)	L1 +.000 –.010 (Hermetic AS)	M	S Hex ±.016	X Bulkhead Thickness (AJ)	X1 Bulkhead Thickness (AS)
8	.750-20 UNEF	1.125	.700	1.125	1.500	.125	.938	.03 – .31	.06 – .72
10	.875-20 UNEF	1.250	.825	1.125	1.500	.125	1.062	.03 – .31	.06 – .72
12	1.000-20 UNEF	1.406	.950	1.125	1.500	.125	1.188	.03 – .31	06 – .72
14	1.125-18 UNEF	1.531	1.075	1.125	1.500	.125	1.312	.03 – .31	06 – .72
16	1.250-18 UNEF	1.654	1.200	1.125	1.500	.125	1.438	.03 – .31	06 – .72
18	1.375-18 UNEF	1.844	1.325	1.125	1.500	.125	1.562	.03 – .31	06 – .72
20	1.500-18 UNEF	2.000	1.450	1.250	1.500	.188	1.688	.03 – .38	06 – .65
22	1.625-18 UNEF	2.125	1.575	1.250	1.500	.188	1.812	.03 – .38	06 – .65
24	1.750-18 UNS	2.250	1.700	1.250	1.500	.188	2.000	.03 – .38	06 – .65

All dimensions for reference only.

AJ7 / AS7 Aquacon

Jam Nut Receptacle

PART NUMBER BUILDER Page 157

Commercial

AJ7X-
ASJX-

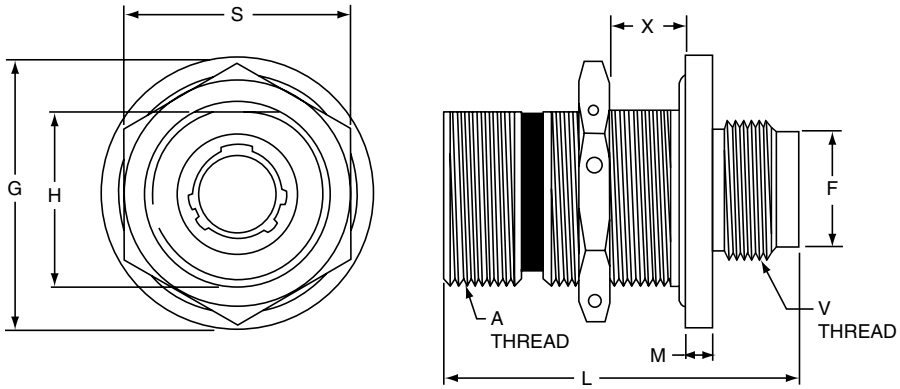

AJ7X-XX-XXX(168)

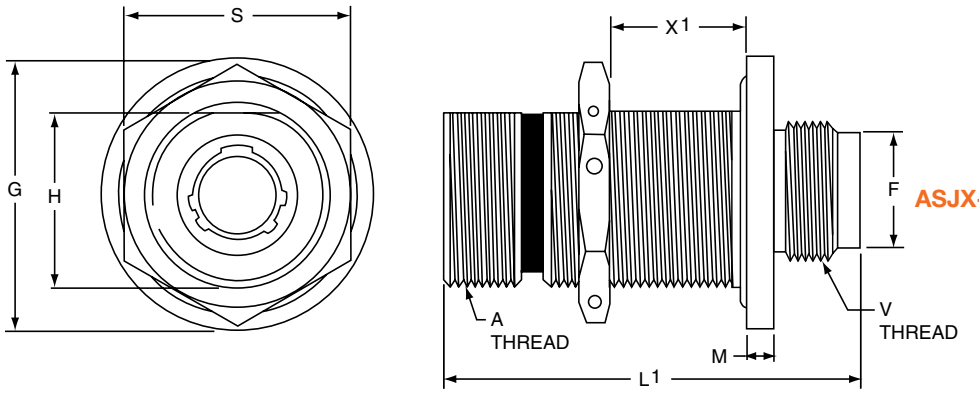

ASJX-XX-XXX(168)

AJ Aquacons use JT (38999 type) inserts that incorporate contact sizes 22D, 22M, 22, 20 or 16. AS Aquacons use SJT (38999 type) inserts that incorporate size 12 contacts

Shell Size	A Thread Class 2A	F +.000 –.005	G Dia.	H +.000 –.005	L ±.010 (AJ)	L1 +.000 –.010 (AS)	M	S Hex ±.016	V Thread Class 2A UNEF	X Bulkhead Thickness (AJ)	X1 Bulkhead Thickness (AS)
8	.750-20 UNEF	.477	1.125	.700	1.484	1.750	.125	.938	.5625-24	.03 – .31	.03 – .58
10	.875-20 UNEF	.602	1.250	.825	1.484	1.750	.125	1.062	.6875-24	.03 – .31	.03 – .58
12	1.000-20 UNEF	.727	1.406	.950	1.484	1.750	.125	1.188	.8125-20	.03 – .31	.03 – .58
14	1.125-18 UNEF	.852	1.531	1.075	1.484	1.750	.125	1.312	.9375-20	.03 – .31	.03 – .58
16	1.250-18 UNEF	.977	1.654	1.200	1.484	1.750	.125	1.438	1.0625-18	.03 – .31	.03 – .58
18	1.375-18 UNEF	1.102	1.844	1.325	1.484	1.750	.125	1.562	1.1875-18	.03 – .31	.03 – .58
20	1.500-18 UNEF	1.227	2.000	1.450	1.609	1.750	.188	1.688	1.3125-18	.03 – .38	.03 – .50
22	1.625-18 UNEF	1.352	2.125	1.575	1.609	1.750	.188	1.812	1.4375-18	.03 – .38	.03 – .50
24	1.750-18 UNS	1.477	2.250	1.700	1.609	1.750	.188	2.000	1.5625-18	.03 – .38	.03 – .50

All dimensions for reference only.

AJ0H Aquacon

Hermetic Square Flange Receptacle

PART NUMBER BUILDER Page 157

Commercial

AJOH-

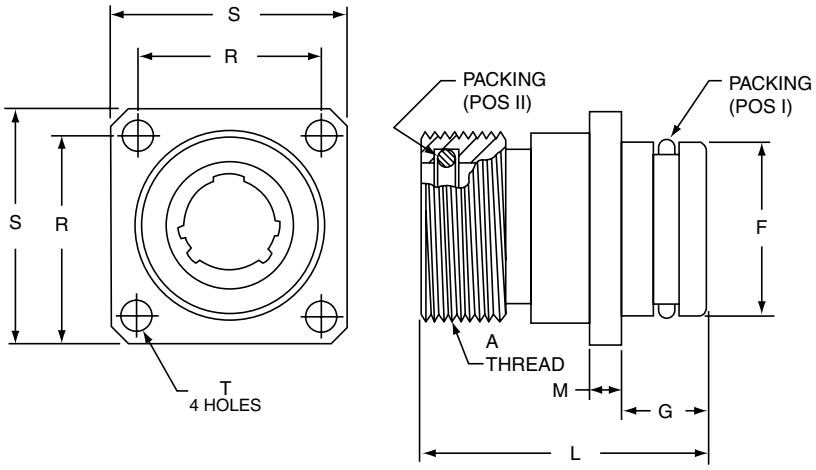

AJ0H-XX-XXX(XXX)

The Aquacon Hermetic Square Flange Receptacle is available in AJ style only which incorporates contact sizes 22D, 22M, 22, 20 or 16.

Shell Size	A Thread Class 2A	F Dia. +.000 –.001	G ±.030	L	M	R	S	T ±.005	Packing Pos I Part Number	Packing Pos II Part Number
8	.750-20 UNEF	.685	.344	1.125	.125	.719	.938	.128	10-90351-15	10-90351-14
10	.875-20 UNEF	.810	.344	1.125	.125	.812	1.031	.128	10-90351-17	10-90351-16
12	1.000-20 UNEF	.935	.344	1.125	.125	.906	1.125	.128	10-90351-19	10-90351-18
14	1.125-18 UNEF	1.060	.344	1.125	.125	.969	1.219	.128	10-90351-21	10-90351-20
16	1.250-18 UNEF	1.185	.344	1.125	.125	1.062	1.312	.128	10-90351-23	10-90351-22
18	1.375-18 UNEF	1.248	.344	1.125	.125	1.156	1.438	.128	10-90351-24	10-90351-24
20	1.500-18 UNEF	1.373	.375	1.219	.188	1.250	1.562	.128	10-90351-26	10-90351-26
22	1.625-18 UNEF	1.498	.375	1.219	.188	1.375	1.688	.147	10-90351-28	10-90351-28
24	1.750-18 UNS	1.623	.375	1.219	.188	1.500	1.812	.147	10-90351-29	10-90351-29

All dimensions for reference only.

Aquacon Series

Protection Caps

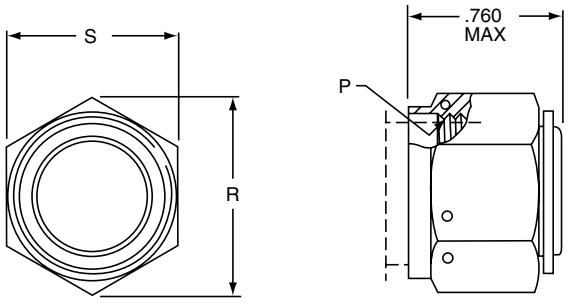

RECEPTACLE PROTECTION CAP 10-377664-XX

Shell Size	P Thread Class 2A	R Ref.	S Hex +.005 –.010
8	.750-20 UNEF	1.010	.875
10	.875-20 UNEF	1.155	1.000
12	1.000-20 UNEF	1.299	1.125
14	1.125-18 UNEF	1.443	1.250
16	1.250-18 UNEF	1.588	1.375
18	1.375-18 UNEF	1.732	1.500
20	1.500-18 UNEF	1.876	1.625
22	1.625-18 UNEF	2.021	1.750
24	1.750-18 UNS	2.165	1.875

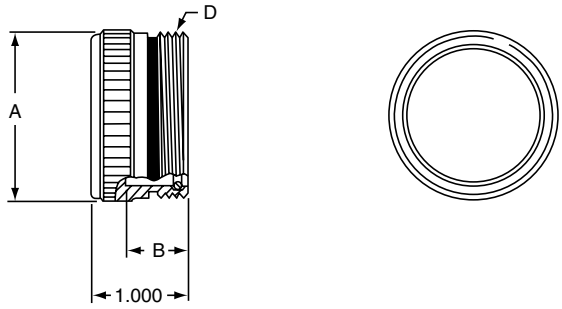

PLUG PROTECTION CAP 10-399623-XX

Shell Size	A Dia. Max.	B +.031 –.000	D Thread Class 2A
8	.771	.625	.750-20 UNEF
10	.898	.625	.875-20 UNEF
12	1.010	.625	1.000-20 UNEF
14	1.137	.625	1.125-18 UNEF
16	1.264	.625	1.250-18 UNEF
18	1.392	.625	1.375-18 UNEF
20	1.519	.688	1.500-18 UNEF
22	1.646	.688	1.625-18 UNEF
24	1.744	.688	1.750-18 UNS

All dimensions for reference only.

HOW TO ORDER PROTECTION CAPS

Protection Cap Style		Cap Size (Correlates to Connector Shell Size)
For Receptacle Connector	10-377664 -	20
For Plug Connector	10-399623 -	20

Installation Instructions, Application Tools

MOLDING

Suggested method of assembly to cable for Aquacon plugs and cable connecting receptacles is molding. The mold sealing diameter has been designed to use a common mold for both plug and receptacle in a given shell size.

SEALING

In a mated condition, the red visual mating indicator band must be fully concealed by the plug coupling nut to assure to reliable, pressure rated sealed joint. Failure to fully tighten the coupling nut may allow leakage through the main joint seal. The red visual mating indicator is so located that only a full and proper mating of the plug and receptacle will cause the indicator to be fully hidden by the plug coupling nut.

Red Visual Mating Indicator Band

MOUNTING SURFACES

The integrity of an "O" ring hydrostatic shell is dependent upon the flatness of the surface on which the receptacle is mounted. Surface finishes of 23 microns or less are recommended for "O" ring sealing areas when jam nut or through bulkhead receptacles are mounted.

MOUNTING CUTOUTS

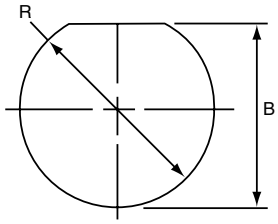

Rear mount jam nut

Shell Size	B +.010 –.000	R +.010 –.000
8	.705	.759
10	.830	.884
12	.955	1.007
14	1.080	1.134
16	1.205	1.259
18	1.330	1.384
20	1.455	1.507
22	1.580	1.634
24	1.705	1.759

RECEPTACLE "O" RING RACKING REQUIREMENTS ARP 568 UNIFORM DASH NUMBER

Shell Size	Main Joint Seal	Shell to Mounting Surface Seal
		Jam Nut
8	ARP-014	ARP-019
10	ARP-016	ARP-021
12	ARP-018	ARP-023
14	ARP-020	ARP-025
16	ARP-022	ARP-027
18	ARP-024	ARP-029
20	ARP-026	ARP-030
22	ARP-028	ARP-031
24	ARP-029	ARP-032

CONVERSION TABLE SALT WATER DEPTH TO HYDROSTATIC PRESSURE

Salt-Water Depth in Feet	Pounds per Sq. Inch	Salt-Water Depth in Feet	Pounds per Sq. Inch
10	4	2,000	890
25	11	2,500	1,113
50	22	3,000	1,335
75	33	4,000	1,780
100	45	5,000	2,225
200	89	6,000	2,670
250	111	7,000	3,115
300	134	7,500	3,338
400	178	8,000	3,560
500	223	9,000	4,005
600	267	10,000	4,450
750	334	15,000	6,675
800	356	20,000	8,900
1,000	445	25,000	11,125

APPLICATION TOOLING

Contact Size	Crimping Tool	Positioner	Insertion Tool*	Removal Tool*	Sealing Plug*	Color Code	Reference Publication
22M	M22520/2-01	M22520/2-09†	11-8674-24††	11-8675-24††	10-405996-22	Black	L-624
22D	M22520/2-01	M22520/2-09†	11-8674-24††	11-8675-24††	10-405996-22	Black	
22	M22520/2-01	M22520/2-09†	11-8674-22††	11-8675-22††	10-405996-22	Black	
20	M22520/1-01	M22520/1-04	11-8674-20††	11-8675-20††	10-405996-20	Red	
16	M22520/1-01	M22520/1-04	11-8674-16††	11-8675-16††	10-405996-16	Blue	
12	M22520/1-01	M2520/1-04	11-8674-12††	11-8675-12††	10-405996-12	Yellow	

* Amphenol Part Numbers
† Pin only. Use M22520/2-06 for socket contacts.
†† Contact Daniels Manufacturing Co. or Astro Tool Corp. for availability.
** Available online at www.amphenol-aerospace.com/termination instructions

Contact Installation

CONTACT INSTALLATION

WIRE AND CABLE PREPARATION

1. Cut wire or cable to desired length. Strip insulation from end of wire in accordance with the following table. Hot wire stripping methods are recommended. Avoid nicking or cutting wire strands.

WIRE STRIP LENGTH IN INCHES

Contact Type	Contact Size					
	22M	22D	22	20	16	12
Solder	1/8	–	1/8	5/32	5/32	
Crimp	1/8 – 5/32			7/32 – 1/4		

SOLDER CONTACT TERMINATION

1. Clean conductors and pre-tin with a good grade 60/40 tin-lead solder to 1/16 inch.
2. Pre-tin contact solder well.
3. With connector in a suitable holding device, solder wells facing operator, and the cutaway portion of the wells up, insert pre-tinned conductor into contact well. Apply heat to closed side of wire well to make joint. Remove heat and allow joint to cool.
4. A resistance soldering unit of approximately 125 watts is recommended. If a soldering iron is used, do not exceed 20 watts for size 22M, 22D and 22 contacts; 80 watts for size 20: and 150 watts for size 16 and 12 contacts.
5. Wipe or brush excess flux from terminations.

CRIMP CONTACT TERMINATION

1. Select proper crimping tool and positioner from Application Tooling table on previous page.
2. Position wire in wire well. Wire must be visible in the inspection hole provided.
3. With the wire in place, insert the contact fully into the crimping tool. Squeeze the crimping tool handles to the full extent of their travel. The recommended crimping tools are the “full cycling” type and will not release until a complete crimp is made. Release pressure on handles and remove the completed crimped contact/ wire assembly.

CONTACT INSERTION

1. Select proper insertion tool from Application Tooling table on previous page.
2. With contact/wire assembly properly positioned in the insertion tool, push forward, directly in line with the grommet hole, until the contact is felt to snap into place.
3. Remove insertion tool.
   All unused contact positions must be filled with uncrimped contacts. In addition, sealing plugs (see Application Tooling table) should be inserted in all unused grommet holes.

CONTACT REMOVAL

1. Select proper removal tool from Application Tooling table on previous page.
2. Carefully insert removal tool until contact to be removed is released. Aquacon contacts are rear release, rear removable.
3. Remove contact.

Accessories and Tools for MIL-DTL-38999 Series III, II, I and SJT

Amphenol Aerospace

F

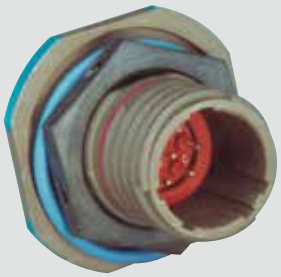

TABLE OF CONTENTS FOR SECTION F

Accessories for MIL-DTL-38999 Connectors

MIL-DTL-38999 Backshells 166

(Refers to Backshell Section from Amphenol PCD)

Protection Caps for Series III 167, 168

Dummy Receptacles for Series III 169

Cable Clamps for Series III. 170

Accessories for Series III Breakaway Connectors 171

Protection Caps for Series II 172, 173

Strain Reliefs for Series II, I 174

Protection Caps for Series I 175, 176

Strain Reliefs for Series I 177

Protection Caps for SJT. 178

Dummy Receptacles & Cable Clamps for SJT. 179

Header Assemblies for Series III, II, I 180, 181

Application Tools (Crimp, Insertion, Removal) for Series III, II, I, SJT 182

Assembly Instructions for Series III, II, I, SJT 183, 184

MIL-DTL-38999 Backshells

Amphenol offers a full range of accessories that are designed to enhance the performance of Amphenol 38999 connectors, both military and non-military.

Backshells are an integral part of any circular connector when it comes to reliable cable connections. Amphenol divisions team up globally to provide a very large assortment of backshells for use with 38999 Series of connectors, as well as other circular series.

This Accessories and Tools section covers what is offered from Amphenol Aerospace, Sidney, NY. For MIL-DTL-38999 Series III, II, I and SJT (reference table of contents on preceding page).

The section of this catalog called "Backshells" covers the backshell and adapters that are provided through the Amphenol PCD/Amphenol India divisions. Please refer to this section for:

- Backshells for Connector Family "L", which includes MIL-DTL-38999 Series III and Series IV
- Backshells for Connector Family "K", which includes MIL-DTL-38999 Series I and Series II
- Backshells for Connector Family "J", which includes MIL-DTL-24682 (Matrix, Series 2), MIL-DTL-5015 (Matrix, MS3400 Series), MIL-DTL-83723 (Series I & III), MIL-DTL-81703 (Series III)

The variety of types of backshells and adapters covered in the Backshells section of this catalog include:

- Non-environmental backshells
- Environmental backshells
- Non-environmental EMI/RFI backshells
- Environmental EMI/RFI backshells
- Shrink boot adapters
- Crimp ring adapters
- Band lock adapters
- Pre-shield adapters

For more information contact:
Amphenol Aerospace: www.amphenol-aerospace.com (phone: 800-678-0141)
or visit www.backshellworld.com or email: sales@backshellworld.com

MIL-DTL-38999, Series III TV

Receptacle Protection Cap

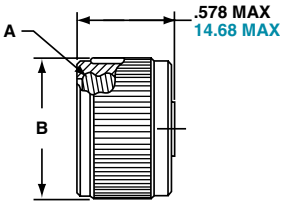

*10-553310-XXX

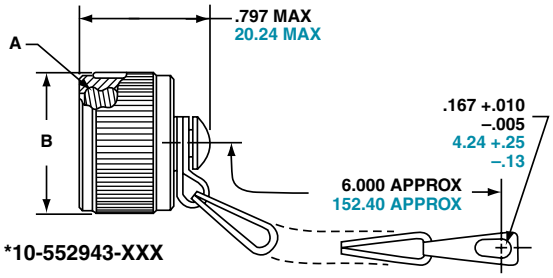

*10-552943-XXX

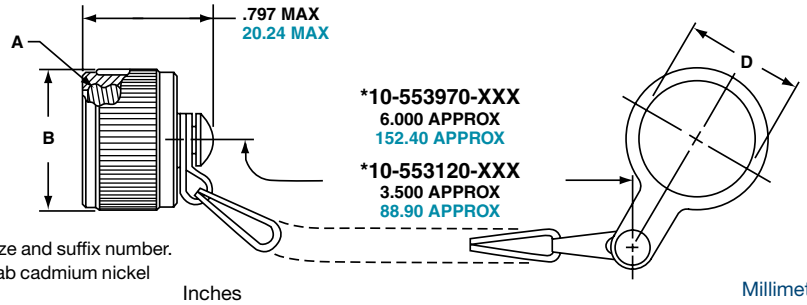

* To complete order number, add shell size and suffix number. For example, shell size 11 with olive drab cadmium nickel base, 10-552943-119

Inches

Shell Size	A Thread Class 2B 0.1P-0.3L-TS	B Dia. Max.	D Dia. +.010 –.000
9	.6250	.875	.703
11	.7500	1.000	.844
13	.8750	1.125	1.016
15	1.0000	1.250	1.141
17	1.1875	1.438	1.266
19	1.2500	1.500	1.391
21	1.3750	1.625	1.516
23	1.5000	1.750	1.641
25	1.6250	1.875	1.766

All dimensions for reference only.

Millimeters

Shell Size	MS Shell Size Code	B Dia. Max.	D Dia. +.25 –.00
9	A	22.23	17.86
11	B	25.40	21.44
13	C	28.58	25.81
15	D	31.75	28.98
17	E	36.53	32.16
19	F	38.10	35.33
21	G	41.28	38.51
23	H	44.45	41.68
25	J	47.63	44.86

TV SERIES III MS METAL PROTECTION CAPS

Shell Size	MS Shell Size Code	MS Receptacle Protection Cap
9	A	D38999/33W9X*
11	B	D38999/33W11X*
13	C	D38999/33W13X*
15	D	D38999/33W15X*
17	E	D38999/33W17X*
19	F	D38999/33W19X*
21	G	D38999/33W21X*
23	H	D38999/33W23X*
25	J	D38999/33W25X*

* To complete order number, replace X with applicable letter as follows:

R - designates eyelet type

N - designates washer type

MS metal protection caps are supplied with service class W which designates corrosion resistant olive drab cadmium plate aluminum.

Consult Amphenol Aerospace for more detailed information on ordering MS Metal protection caps.

Finish	10-No Suffix
Olive Drab, Cadmium, Nickel base	-XX9
Electroless Nickel	-XXG

Consult Amphenol Aerospace for availability of stainless steel protection caps.

TV SERIES III PLASTIC PROTECTION CAPS

Shell Size	Receptacle
9	10-70500-10
11	10-70500-12
13	10-70500-14
15	10-70500-16
17	10-70500-19
19	10-70500-20
21	10-70500-22
23	10-70500-24
25	10-70524-1

MIL-DTL-38999, Series III TV

Plug Protection Cap

*10-552944-XXX

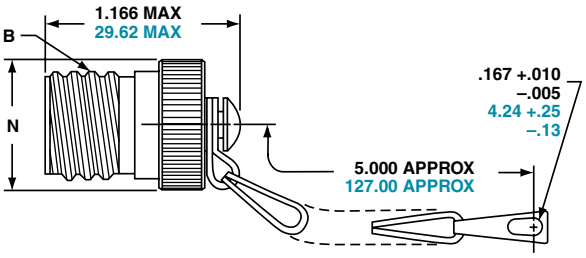

*10-553998-XXX

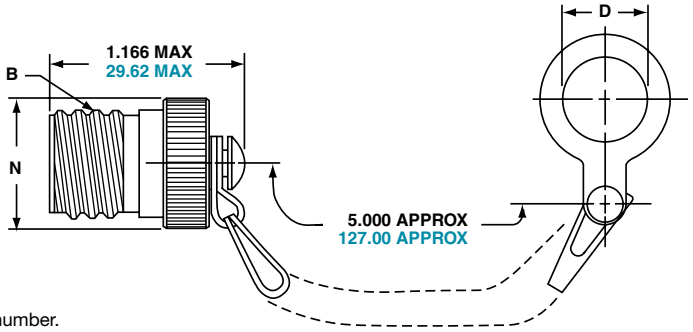

* To complete order number, add shell size and suffix number. For example, shell size 11 with olive drab cadmium nickel base, 10-552944-119

Inches

Shell Size	A Thread Class 2B 0.1P-0.3L-TS	D Dia. +.010 –.000	N Dia. Max.
9	.6250	.516	.895
11	.7500	.641	1.000
13	.8750	.766	1.171
15	1.0000	.891	1.299
17	1.1875	1.016	1.436
19	1.2500	1.141	1.543
21	1.3750	1.266	1.670
23	1.5000	1.343	1.787
25	1.6250	1.516	1.914

Millimeters

Shell Size	MS Shell Size Code	D Dia. +.25 –.00	N Dia. Max.
9	A	13.11	22.73
11	B	16.28	25.40
13	C	19.46	29.74
15	D	22.63	32.99
17	E	25.81	36.47
19	F	28.98	39.19
21	G	32.16	42.42
23	H	34.11	45.39
25	J	38.51	48.62

All dimensions for reference only.

TV SERIES III MS METAL PROTECTION CAPS

Shell Size	MS Shell Size Code	MS Plug Protection Cap
9	A	D38999/32W9X*
11	B	D38999/32W11X*
13	C	D38999/32W13X*
15	D	D38999/32W15X*
17	E	D38999/32W17X*
19	F	D38999/32W19X*
21	G	D38999/32W21X*
23	H	D38999/32W23X*
25	J	D38999/32W25X*

* To complete order number, replace X with applicable letter as follows:

R - designates eyelet type

N - designates washer type

MS metal protection caps are supplied with service class W which designates corrosion resistant olive drab cadmium plate aluminum.

Consult Amphenol Aerospace for more detailed information on ordering MS Metal protection caps.

Finish	10-No Suffix
Olive Drab, Cadmium, Nickel base	-XX9
Electroless Nickel	-XXG

Consult Amphenol Aerospace for availability of stainless steel protection caps.

TV SERIES III PLASTIC PROTECTION CAPS

Shell Size	Plug
9	10-70506-14
11	10-70506-16
13	10-70500-18
15	10-70500-20
17	10-70500-22
19	10-70500-24
21	10-70524-1
23	10-70506-28
25	10-70500-28

Dummy Receptacle

PART NUMBER REFERENCE.
SEE NOTE BELOW TO COMPLETE.

***10-553974-XXX**

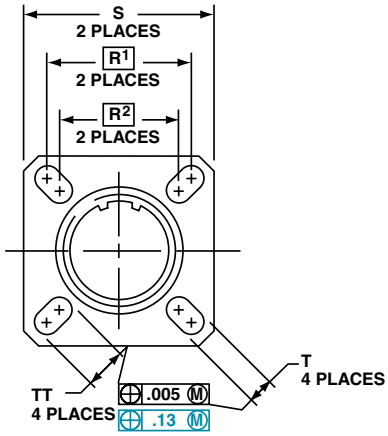

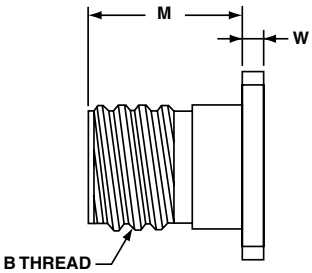

* To complete order number, add shell size and suffix number. For example, shell size 11 with olive drab cadmium nickel base, 10-553974-119

Inches

Shell Size	MS Shell Size Coded	B Thread 0.1P-0.3L-TS (Plated)	M +.020 –.000	R1	R2	S ±.010	T ±.008 –.006	W ±.010	TT ±.008 –.006
9	A	.6250	.822	.719	.594	.938	.128	.098	.216
11	B	.7500	.822	.812	.719	1.031	.128	.098	.194
13	C	.8750	.822	.906	.812	1.125	.128	.098	.194
15	D	1.0000	.822	.969	.906	1.219	.128	.098	.173
17	E	1.1875	.822	1.062	.969	1.312	.128	.098	.194
19	F	1.2500	.822	1.156	1.062	1.438	.128	.098	.194
21	G	1.3750	.791	1.250	1.156	1.562	.128	.125	.194
23	H	1.5000	.791	1.375	1.250	1.688	.154	.125	.242
25	J	1.6250	.791	1.500	1.375	1.812	.154	.125	.242

Finish	10-No Suffix
Olive Drab, Cadmium, Nickel Base	-XX9
Electroless Nickel	-XXG

Millimeters

Shell Size	MS Shell Size Coded	M +.51 –.00	R1	R2	S ±.25	T +.20 –.15	W ±.25	TT +.20 –.15
9	A	20.88	18.26	15.09	23.83	3.25	2.49	5.49
11	B	20.88	20.62	18.26	26.19	3.25	2.49	4.93
13	C	20.88	23.01	20.62	28.58	3.25	2.49	4.93
15	D	20.88	24.61	23.01	30.96	3.25	2.49	4.93
17	E	20.88	26.97	24.61	33.32	3.25	2.49	4.93
19	F	20.88	29.36	26.97	36.53	3.25	2.49	4.93
21	G	20.09	31.75	29.36	39.67	3.25	3.18	4.93
23	H	20.09	34.93	31.75	42.88	3.91	3.18	6.15
25	J	20.09	38.10	34.93	46.02	3.91	3.18	6.15

All dimensions for reference only.

Designates true position dimensioning.

MIL-DTL-38999, Series III TV

Cable Clamps

Straight Style
***10-552681-XXX metal coupling**

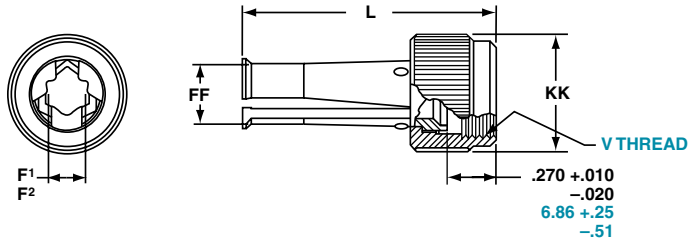

90 Degree Elbow Style
***10-552682-XXX metal coupling**

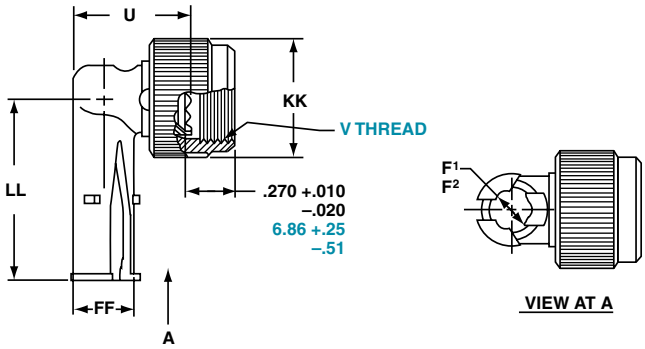

* To complete order number, see suffix chart below. Examples: Clamp with metal coupling nut for shell size 11 with olive drab cadmium nickel base, 10-552681-119.

Inches

Shell Size	MS Shell Size Code	F[1] Min. Dia. Cable	F[2] Max. Dia. Cable	L Max.	U Max.	FF Dia. Max.	KK Dia. Max.	LL Max.
9	A	.094	.203	1.431	.656	.347	.629	1.015
11	B	.141	.250	1.431	.688	.394	.756	1.062
13	C	.172	.323	1.431	.750	.467	.883	1.125
15	D	.203	.422	1.431	.859	.566	1.011	1.328
17	E	.234	.500	1.431	.937	.644	1.138	1.392
19	F	.265	.562	1.431	1.000	.706	1.265	1.453
21	G	.297	.625	1.492	1.062	.769	1.393	1.609
23	H	.328	.703	1.492	1.141	.847	1.488	1.656
25	J	.359	.765	1.492	1.203	.909	1.616	1.719

Finish	10-No Suffix
Olive Drab, Cadmium Nickel Base	-XX9
Electroless Nickel	-XXG

Millimeters

Shell Size	MS Shell Size Code	F[1] Min. Dia. Cable	F[2] Max. Dia. Cable	L Max.	U Max.	V Thread Metric	FF Dia. Max.	KK Dia. Max.	LL Max.
9	A	2.39	5.16	36.35	16.66	M12X1-6H	8.81	15.98	25.78
11	B	3.58	6.35	36.35	17.48	M15X1-6H	10.01	19.20	26.97
13	C	4.37	8.20	36.35	19.05	M18X1-6H	11.86	22.43	28.58
15	D	5.16	10.72	36.35	21.82	M22X1-6H	14.38	25.68	33.73
17	E	5.94	12.70	36.35	23.80	M25X1-6H	16.36	28.91	35.36
19	F	6.73	14.27	36.35	25.40	M28X1-6H	17.93	32.13	36.91
21	G	7.54	15.88	37.90	26.97	M31X1-6H	19.53	35.38	40.87
23	H	8.83	17.86	37.90	28.98	M34X1-6H	21.51	37.80	42.06
25	J	9.12	19.43	37.90	30.56	M37X1-6H	23.09	41.05	43.66

38999, Series III TV Breakaway Fail Safe

Backshells, Dummy Contacts, Wire Combs

Amphenol Aerospace

Amphenol offers a full range of accessories that are designed to enhance the performance of Amphenol Breakaway connectors.

Low Profile Backshells in shell size 25 with the following features:

- Olive drab cadmium finish
- 90 degree termination
- Low profile design with three heights ranging from 1.010 to 1.660
- Rear access covers to help ease harness assembly and repairability
- Amphenol part numbers: 10-640000-XXX

BACKSHELLS ARE OFFERED FOR USE WITH BREAKAWAY FAIL SAFE CONNECTORS IN THREE HEIGHTS

DUMMY CONTACTS

- Available in size 12 and size 8
- Provide a cost effective alternative for sealing unused contact cavities
- Size 8 part number: T3-4008-59P
- Size 12 part number: T3-4012-59P

WIRE COMBS

- Available for the 25-20 insert pattern to help to stabilize and prevent contact side loading
- Amphenol part number: 21-33626-XXX

For information on how to order these accessory products for Breakaway Fail Safe connectors, consult Amphenol Aerospace.

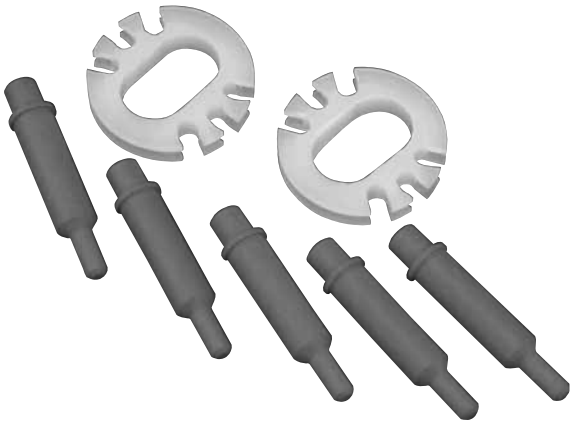

ACCESSORY PRODUCTS FOR BREAKAWAY CONNECTORS: DUMMY CONTACTS AND WIRE COMBS

MIL-DTL-38999, Series II JT

Plug Protection Cap

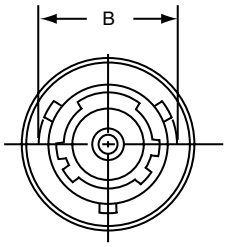

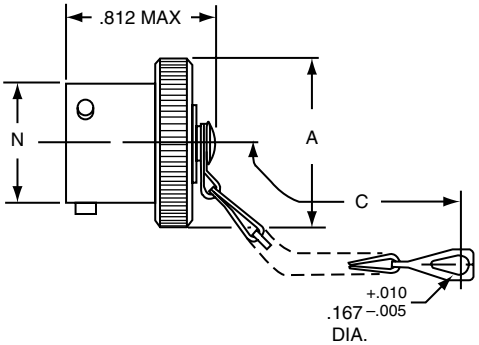

*10-547138-XXX (MS27510XXXC)

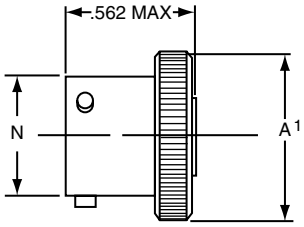

*10-241853-XXX (MS27510XXXA)

For MS stamping identification, accessories must be ordered by MS part number. If ordered by 10- part number, they will be stamped with said number.

* To complete order number, add shell size and suffix number. For example, shell size 10 with cadmium plate, nickel base would be 10-241853-107, MS27510A10C or MS27510A10A.

Shell Size	A Dia. Max.	A[1] Dia. Max.	B +.000 –.016	C Approx.	N Dia. +.001 –.005
8	.719	.703	.563	3.000	.473
10	.844	.828	.680	3.000	.590
12	1.000	.984	.859	3.500	.750
14	1.125	1.109	.984	3.500	.875
16	1.250	1.234	1.108	3.500	1.000
18	1.375	1.359	1.233	3.500	1.125
20	1.500	1.484	1.358	4.000	1.250
22	1.625	1.609	1.483	4.000	1.375
24	1.750	1.734	1.610	4.000	1.500

All dimensions for reference only.

Finish	10-Number Suffix	MS Number Suffix with chain	MS Number Suffix without chain
Chromate Treat	-XX0		
Anodic Coating	-XX5	CXXC	CXXA
Cadmium Plate Nickel Base	-XX7	AXXC	AXXA
Olive Drab, Cadmium, Nickel Base	-XX9	BXXC	BXXA
Electroless Nickel	-XXG	FXXC	FXXA

SERIES II JT PLASTIC PROTECTION CAPS

Shell Size		Plug
8		10-70500-10
	9	10-70506-14
10		10-70506-14
	11	10-70506-16
12		10-70506-16
	13	10-70506-18
14		10-70506-18
	15	10-70506-20
16		10-70506-20
	17	10-70506-22
18		10-70506-22
	19	10-70506-24
20		10-70506-24
	21	10-70576-24
22		10-70576-24
	23	10-70506-28
24		10-70506-28
	25	10-558651-25

MIL-DTL-38999, Series II JT

Receptacle Protection Cap

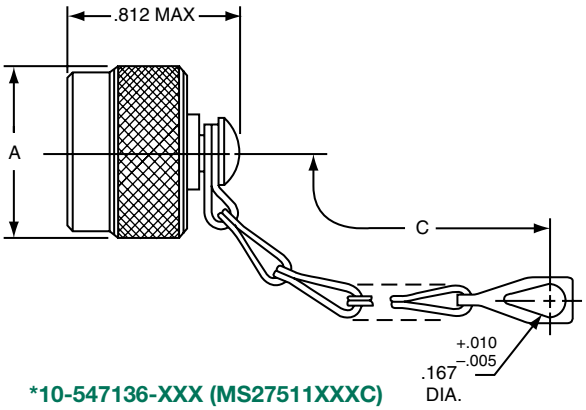

*10-547136-XXX (MS27511XXXC)

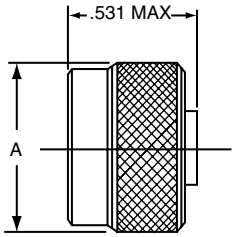

*10-241856-XXX (MS27511XXXA)

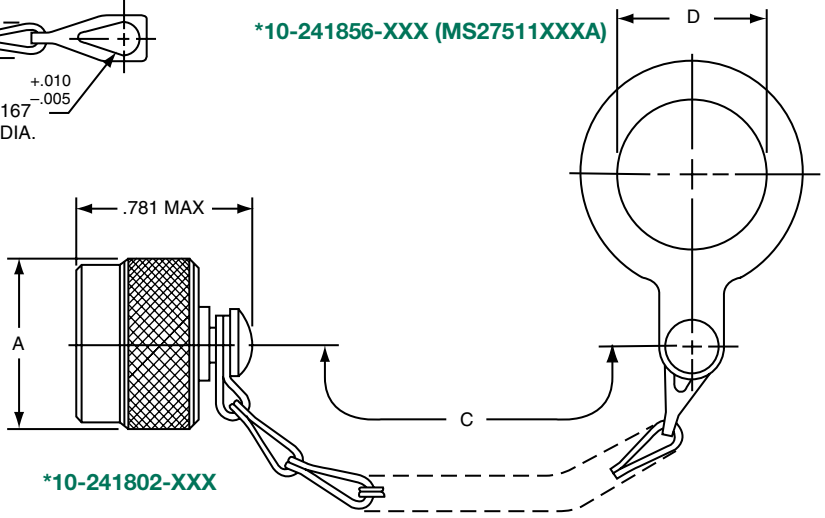

*10-241802-XXX

For MS stamping identification, accessories must be ordered by MS part number.
If ordered by 10- part number, they will be stamped with said number.
* To complete order number, add shell size and suffix number.
For example, shell size 10 with cadmium plate, nickel base would be 10-241802-107, MS27511A10C, MS27511A10A

Shell Size	A Dia. Max.	C Approx.	D +.010 –.000
8	.719	3.000	.891
10	.844	3.000	1.016
12	1.000	3.500†	1.141
14	1.125	3.500	1.266
16	1.250	3.500	1.391
18	1.375	3.500	1.516
20	1.500	4.000	1.641
22	1.625	4.000	1.766
24	1.750	4.000	1.891

† 3.000 for MS27511
All dimensions for reference only.

Finish	10-Number Suffix	MS Number Suffix with chain	MS Number Suffix without chain
Chromate Treat	-XX0		
Anodic Coating	-XX5	CXXC	CXXA
Cadmium Plate Nickel Base	-XX7	AXXC	AXXA
Olive Drab, Cadmium, Nickel Base	-XX9	BXXC	BXXA
Electroless Nickel	-XXG	FXXC	FXXA

SERIES II JT PLASTIC PROTECTION CAPS

Shell Size		Receptacle
8		10-70506-10S
	9	10-70500-10
10		10-70506-12
	11	10-70500-12
12		10-70506-14
	13	10-70500-14
14		10-70506-16
	15	10-70500-16
16		10-70506-18
	17	10-70500-18
18		10-70506-20
	19	10-70500-20
20		10-70506-22
	21	10-70500-22
22		10-70506-24
	23	10-70500-24
24		10-70576-24
	25	10-70506-28

MIL-DTL-38999, Series II JT
MIL-DTL-38999, Series I LJT

Strain Relief (Crimp Type)

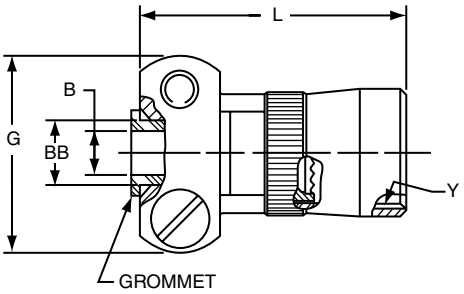

***10-405982-XXX (MS27506XXX-2 REFERENCE M85049/49)**

For MS stamping identification, accessories must be ordered by MS part number.
If ordered by 10-part number, they will be stamped with said number.
*To complete order number, add shell size and suffix number.

Finish	10-Number Suffix	MS27506 Suffix	M85049/49 Suffix
Chromate Treat	-XX0		NA
Anodic Coating	-XX5	CXX-2	(-2-XXA)
Cadmium Plate Nickel Base	-XX7	AXX-2	NA
Olive drab, Cadmium, Nickel base	-XX9	BXX-2	(-2-XXW)
Electroless Nickel	-XXG	FXX-2	(-2-XXN)

For example: Shell size 10 with cadmium plate, nickel base would be 10-405982-107 or M85049/49-2-10W

Shell Size	B Dia. +.010 –.025	G Max.	L Max.	Y Thread (Modified)		BB Dia. +.000 –.011	Screw Size
				Size Class 2B	Modified Minor Dia.		
8	.125	.775	.984	.4375-28UNEF	.399 – .405	.250	6-32UNC
10	.188	.837	.984	.5625-24UNEF	.524 – .529	.312	6-32UNC
12	.312	.963	.984	.6875-24UNEF	.649 – .654	.438	6-32UNC
14	.375	1.087	1.234	.8125-20UNEF	.766 – .771	.562	6-32UNC
16	.500	1.150	1.234	.9375-20UNEF	.891 – .896	.625	6-32UNC
18	.625	1.400	1.234	1.0625-18UNEF	1.002 – 1.007	.750	8-32UNC
20	.625	1.400	1.234	1.1875-18UNEF	1.135 – 1.140	.750	8-32UNC
22	.750	1.587	1.359	1.3125-18UNEF	1.252 – 1.257	.938	8-32UNC
24	.800	1.681	1.281	1.4375-18UNEF	1.377 – 1.382	1.000	8-32UNC

All dimensions for reference only.
Note: For solder type cable clamp 10-241055-XXX (M85049/49) consult Amphenol Aerospace.

MIL-DTL-38999, Series I LJT

Plug Protection Cap

Amphenol Aerospace

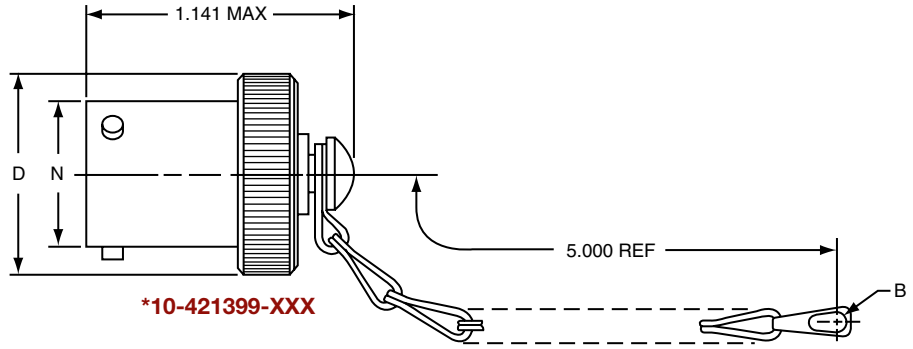

*10-421399-XXX

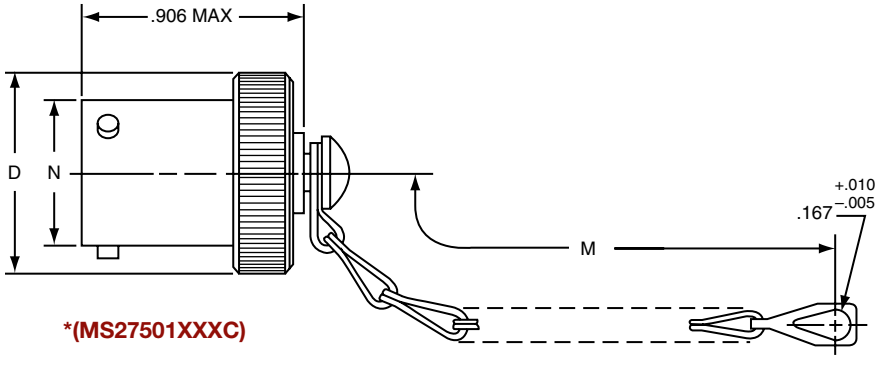

*(MS27501XXXC)

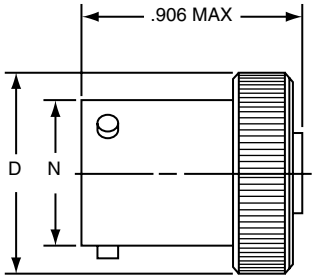

* 10-275196-XXX (MS27501XXXA)

* To complete order number, add shell size and suffix number.
For example, shell size 11 with cadmium plate, nickel base would be 10-421399-117, MS27501A11C, MS27501A11A.

Shell Size	B Dia. Ref	D Dia. Max.	M ±.250	N Dia. +.001 −.005
9	.180	.812	3.000	.572
11	.180	.938	3.000	.700
13	.180	1.062	3.500	.850
15	.180	1.188	3.500	.975
17	.180	1.312	3.500	1.100
19	.209	1.438	3.500	1.207
21	.209	1.562	4.000	1.332
23	.209	1.688	4.000	1.457
25	.209	1.812	4.000	1.582

Finish	10- Number Suffix	MS Number Suffix with chain	MS Number Suffix without chain
Chromate Treat	-XX0		
Anodic Coating	-XX5		
Cadmium Plate Nickel Base	-XX7	AXXC	AXXA
Olive Drab, Cadmium, Nickel Base	-XX9	BXXC	BXXA
Electroless Nickel	-XXG	FXXC	FXXA

All dimensions for reference only.

SERIES I LJT PLASTIC PROTECTION CAPS

Shell Size		Plug
8		10-70500-10
	9	10-70506-14
10		10-70506-14
	11	10-70506-16
12		10-70506-16
	13	10-70506-18
14		10-70506-18
	15	10-70506-20
16		10-70506-20
	17	10-70506-22
18		10-70506-22
	19	10-70506-24
20		10-70506-24
	21	10-70576-24
22		10-70576-24
	23	10-70506-28
24		10-70506-28
	25	10-558651-25

MIL-DTL-38999, Series I LJT

Receptacle Protection Cap

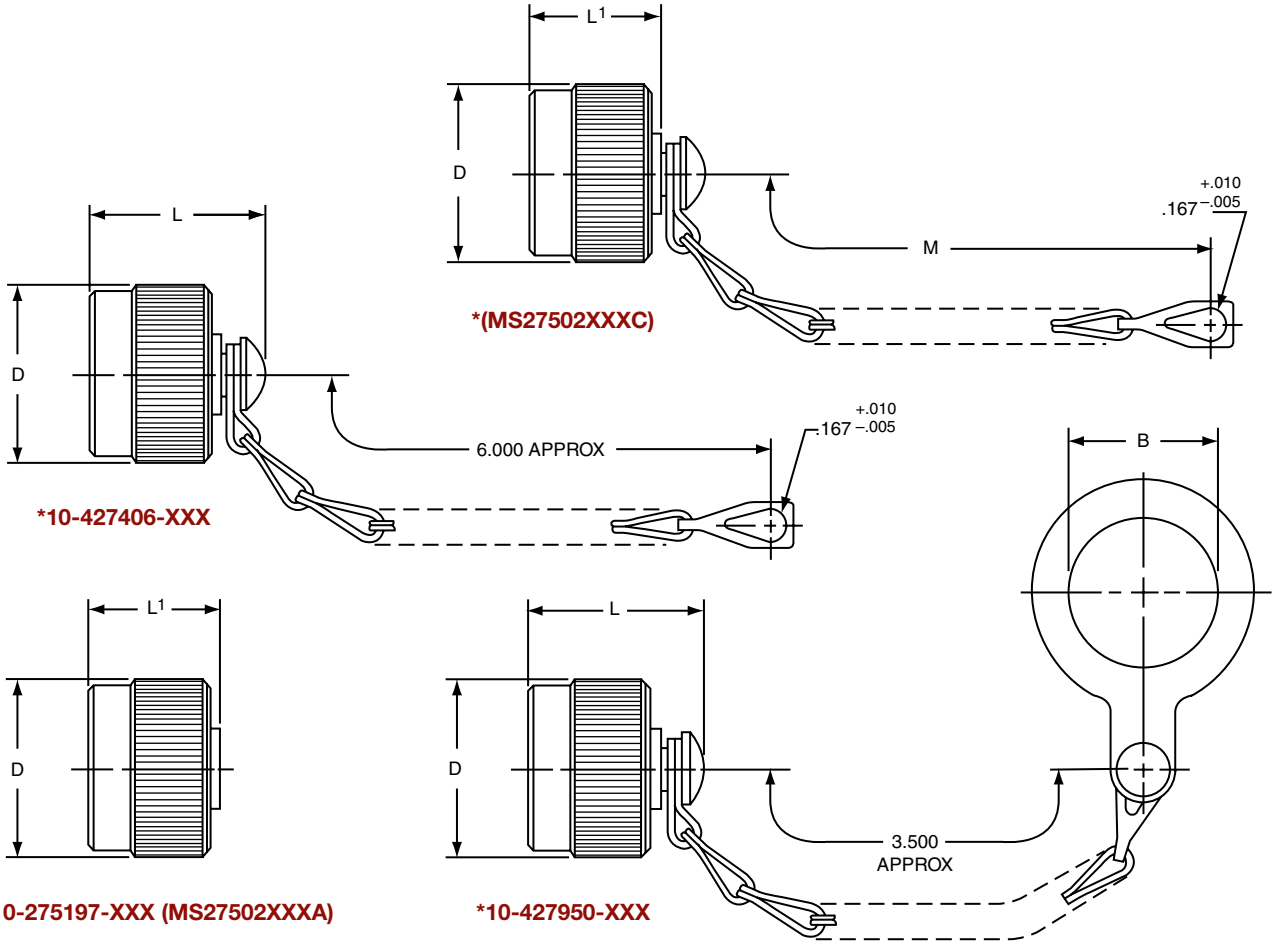

For MS stamping identification, accessories must be ordered by MS part number.
If ordered by 10- part number, they will be stamped with said number.
*To complete order number, add shell size and suffix number.
For example, shell size 11 with cadmium plate, nickel base would be 10-427406-117, MS27502A11C, MS27502A11A.

Shell Size	B Dia. +.010 −.000	D Dia. Max.	L Max.	L¹ Max	M ±.250
9	.703	.844	1.070	.844	3.000
11	.844	.969	1.070	.844	3.000
13	1.016	1.125	1.070	.844	3.500
15	1.141	1.250	1.070	.844	3.500
17	1.266	1.406	1.070	.844	3.500
19	1.391	1.500	1.070	.844	3.500
21	1.516	1.625	1.070	.844	4.000
23	1.641	1.750	1.070	.844	4.000
25	1.766	1.875	1.089	.875	4.000

Finish	10-Number Suffix	MS Number Suffix with chain	MS Number Suffix without chain
Chromate Treat	-XX0		
Anodic Coating	-XX5	CXXC	CXXA
Cadmium Plate Nickel Base	-XX7	AXXC	AXXA
Olive Drab, Cadmium, Nickel Base	-XX9	BXXC	BXXA
Electroless Nickel	-XXG	FXXC	FXXA

All dimensions for reference only.

SERIES I LJT PLASTIC PROTECTION CAPS

Shell Size		Receptacle
8		10-70506-10S
	9	10-70500-10
10		10-70506-12
	11	10-70500-12
12		10-70506-14
	13	10-70500-14
14		10-70506-16
	15	10-70500-16
16		10-70506-18
	17	10-70500-18
18		10-70506-20
	19	10-70500-20
20		10-70506-22
	21	10-70500-22
22		10-70506-24
	23	10-70500-24
24		10-70576-24
	25	10-70506-28

Strain Relief (Solder Type)

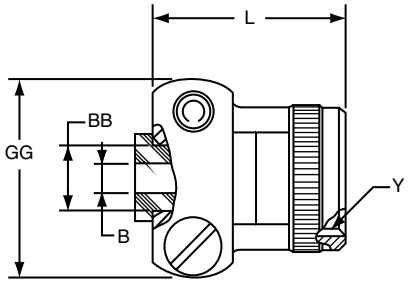

***10-436792-XXX**

For military type cable clamp see MS27506 or M85049/49 on page 174.
*To complete order number, add shell size and suffix number.

Finish	10-Number Suffix
Chromate treat	-XX0
Anodic coating	-XX5
Cadmium Plate Nickel Base	-XX7
Olive Drab, Cadmium, Nickel Base	-XX9
Electroless Nickel	-XXG

For example: Shell size 11 with cadmium plate, nickel base would be 10-436792-117.

Shell Size	B Dia. +.010 –.025	L Max.	Y Thread Class 2B (Plated)	GG Max.	BB Dia. +.000 –.011
9	.125	.859	.4375-28 UNEF	.775	.250
11	.188	.859	.5625-24 UNEF	.837	.312
13	.312	.859	.6875-24 UNEF	.963	.438
15	.375	1.109	.8125-20 UNEF	1.087	.562
17	.500	1.109	.9375-20 UNEF	1.150	.625
19	.625	1.109	1.0625-18 UNEF	1.400	.750
21	.625	1.109	1.1875-18 UNEF	1.400	.750
23	.750	1.234	1.3125-18 UNEF	1.587	.938
25	.800	1.234	1.4375-18 UNEF	1.681	1.000

All dimensions for reference only.

SJT – Accessories

Plug Protection Cap/Receptacle Protection Cap

PLUG PROTECTION CAP

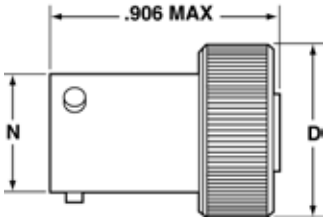

*10-476801-XXX

RECEPTACLE PROTECTION CAP

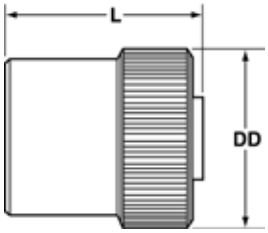

*10-325943-XXX

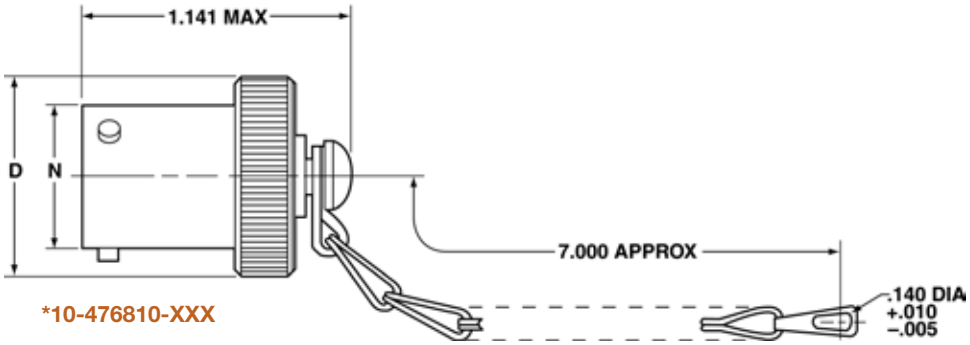

*10-476810-XXX

* To complete order number, add shell size and suffix number. For example, shell size 10 with bright cadmium plated nickel base, 10-476810-107.

Plug Shell Size	D Dia. Max.	N Dia. +.001 –.005
8	.688	.473
10	.812	.590
12	.969	.750
14	1.094	.875
16	1.219	1.000
18	1.344	1.125
20	1.469	1.250
22	1.594	1.375
24	1.719	1.500

All dimensions for reference only

* To complete order number, add shell size and suffix number. For example, shell size 10 with bright cadmium plated nickel base, 10-325943-107.

Receptacle Shell Size	DD Dia. Max.	L Max.
8	.734	.828
10	.844	.828
12	1.016	.828
14	1.141	.828
16	1.265	.828
18	1.391	.828
20	1.500	.828
22	1.625	.828
24	1.750	.859

Protection Cap Finish	Suffix
Bright Cadmium Plated Nickel Base	XX7
Anodic Coating (Alumilite)	XX5
Chromate Treated (Iridite 14-2)	XX0
Olive Drab Cadmium Plate Nickel Base	XX9
Electroless Nickel Coating	XXG

SJT PLASTIC PROTECTION CAPS

Shell Size	Plug	Receptacle
8	10-70500-10	10-70506-10S
10	10-70500-14	10-70506-12
12	10-70500-16	10-70506-14
14	10-70500-18	10-70506-16
16	10-70500-20	10-70506-18
18	10-70500-22	10-70506-20
20	10-70500-24	10-70506-22
22	10-70524-1	10-70506-24
24	10-70506-28	10-70524-1

DUMMY RECEPTACLE

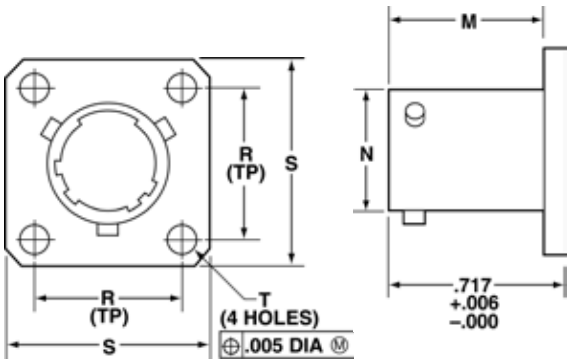

*10-476807-XXX

Dummy Receptacle Finish	Suffix
Bright Cadmium Plated Nickel Base	XX7
Anodic Coating (Alumilite)	XX5
Chromate Treated (Iridite 14-2)	XX0
Olive Drab Cadmium Plate Nickel Base	XX9
Electroless Nickel Coating	XXG

* To complete order number, add shell size and suffix number. For example, shell size 10 with bright cadmium plated nickel base, 10-476807-107.

Dummy Receptacle Shell Size	D Dia. Max.	L Max.
8	.734	.828
10	.844	.828
12	1.016	.828
14	1.141	.828
16	1.265	.828
18	1.391	.828
20	1.500	.828
22	1.625	.828
24	1.750	.859

All dimensions for reference only

CABLE CLAMP

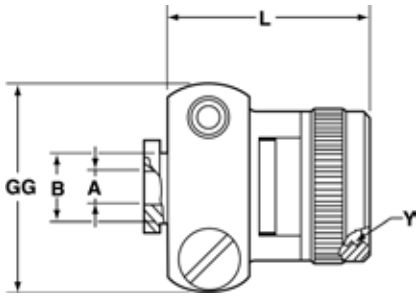

*10-476808-XXX

Cable Clamp Finish	Suffix
Bright Cadmium Plated Nickel Base	XX7
Anodic Coating (Alumilite)	XX5
Chromate Treated (Iridite 14-2)	XX0
Olive Drab Cadmium Plate Nickel Base	XX9
Electroless Nickel Coating	XXG

* To complete order number, add shell size and suffix number. For example, shell size 10 with bright cadmium plated nickel base, 10-476808-107.

Cable Clamp Shell Size	A Dia. +.010 –.025	B Dia. +.000 –.011	L Max.	Y Thread Class 2B UNEF (Plated)	GG Max.
8	.125	.250	.922	.4375-28	.775
10	.188	.312	.922	.5625-24	.837
12	.312	.438	.922	.6875-24	.963
14	.375	.562	1.172	.8125-20	1.087
16	.500	.625	1.172	.9375-20	1.150
18	.625	.750	1.172	1.0625-18	1.400
20	.625	.750	1.172	1.1875-18	1.400
22	.750	.938	1.297	1.3125-18	1.587
24	.800	1.000	1.297	1.4375-18	1.681

All dimensions for reference only

MIL-DTL-38999, Series III TV, II JT, I LJT

Universal "Header Assembly" for Flex Print or PC Board

MOUNTS TO ALL MIL-DTL-38999

The universal header assembly from Amphenol provides for easy separation of the connector from the board.

The header assembly is comprised of a short pin/socket contact. The tail end of the contact is soldered to the through hole of the flex or printed circuit board. The socket is embedded in the insulator, making electrical contact with the printed circuit tail of the connector.

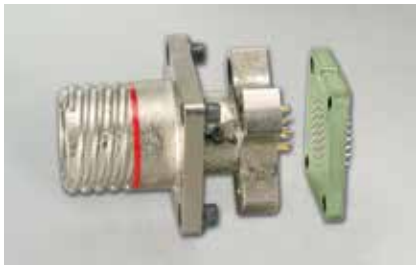

HEADERS PROVIDE EASY SEPARATION OF THE CONNECTOR FROM THE PC BOARD.

FEATURES AND BENEFITS:

- Circular and square header assemblies available
- Cost and time savings in the manufacturing process
- Assemblies can be vapor phase or wave soldered to flex/printed circuit board
- Allows electrical testing when installed properly.
- Connector assemblies can be easily removed from and reattached to the header assembly.

MOUNTING APPLICATIONS

- Amphenol **square** universal headers are slotted to allow mounting to all series of MIL-DTL-38999 or MIL-DTL-26482 connectors without special alterations.
- Amphenol **circular** universal headers are designed to accommodate the rear flange of PCB Board Mount shells, series MIL-DTL-38999 connectors without special alterations.
- The header assembly can be attached to connectors with standard flange placement or directly to the circuit board.
- Connectors with dual flange mounting hardware can be provided to allow easy mounting to the panel or the header assembly.
- Forward flange would mount the connector to the panel
- Rear flange would be used to mount to the header assembly.
- Various types of captivated or loose attaching screws can be utilized for unique applications.

* For information on Header Assemblies for MIL-DTL-26482 connector, consult Amphenol Aerospace.

MOUNTING TO RECTANGULAR ARINC CONNECTORS

- Headers for ARINC connector arrangements accommodate up to 150 pins
- Consult Amphenol Canada, Ontario for ARINC configurations.

MATERIALS

- Body is molded or machined from FR-4.
- Electrical engagement areas of the header contact are plated with .00003 inches minimum of gold over .00005 inches minimum of nickel.

See drawing of standard header on next page.

MIL-DTL-38999, Series III TV, II JT, I LJT

Universal "Header Assembly" for Flex Print or PC Board

Amphenol Aerospace

The drawing below shows the standard header assembly for use with MIL-DTL-38999 connectors.

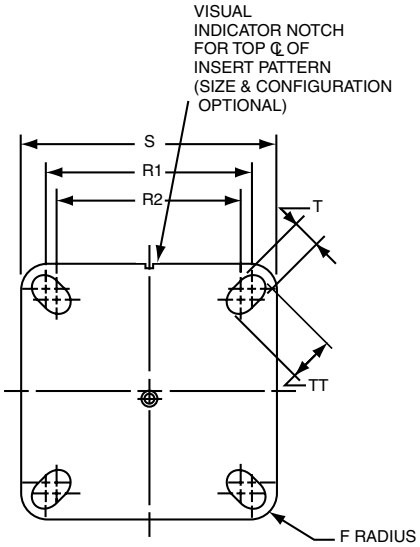

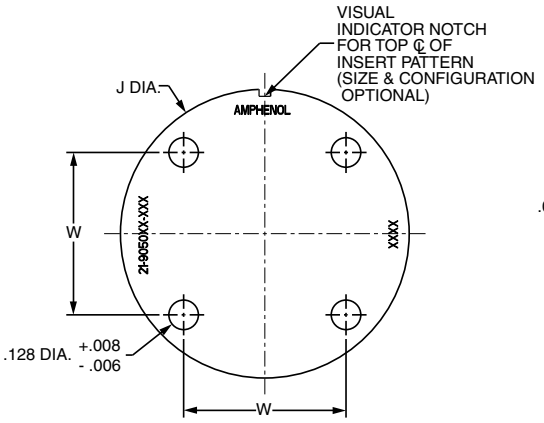

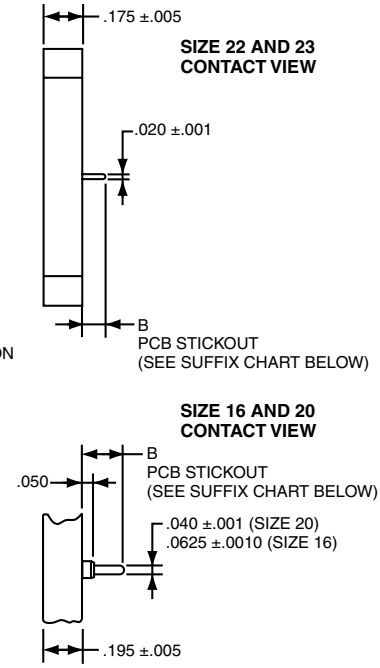

NOTE:
Size 16 accepts .048 to .064 dia. PCB tails.
Size 20 accepts .037 to .043 dia. PCB tails.
Size 22 & 23 accepts .018 to .022 dia. PCB tails

Square Assembly Part Number	Shell Size	F Radius	S ± .005	T + .008 − .006	R1 TP†	R2 TP†	TT + .008 − .006
21-904008-XX( )	8/9	.094	.938	.128	.719	.594	.216
21-904010-XX( )	10/11	.094	1.031	.128	.812	.719	.194
21-904012-XX( )	12/13	.094	1.125	.128	.906	.812	.194
21-904014-XX( )	14/15	.125	1.219	.128	.969	.906	.173
21-904016-XX( )	16/17	.125	1.312	.128	1.062	.969	.194
21-904018-XX( )	18/19	.125	1.438	.128	1.156	1.062	.194
21-904020-XX( )	20/21	.125	1.562	.128	1.250	1.156	.194
21-904022-XX( )	22/23	.125	1.688	.154	1.375	1.250	.242
21-904024-XX( )	24/25	.125	1.812	.154	1.500	1.375	.242

† TP designates true position dimensioning.

Circular Assembly Part Number	Shell Size	J Dia. ± .005	W
21-905008-XX( )	8/9	1.016	.532
21-905010-XX( )	10/11	1.062	.601
21-905012-XX( )	12/13	1.250	.703
21-905014-XX( )	14/15	1.375	.791
21-905016-XX( )	16/17	1.500	.875
21-905018-XX( )	18/19	1.625	.975
21-905020-XX( )	20/21	1.750	1.053
21-905022-XX( )	22/23	1.875	1.145
21-905024-XX( )	24/25	2.000	1.233

HOW TO ORDER INFORMATION FOR HEADER ASSEMBLY WITH MIL-DTL-38999 CONNECTORS

1. Series	2. Type	3. Shell Size & Insert Arrg.	4. PCB Suffix
21-	9040	08-03	1

1. SERIES	
21-	Header Assembly

2. TYPE	
9040	Square
9050	Circular

3. SELECT A SHELL SIZE & INSERT ARRANGEMENT SEE PAGES 2-5

Shell Size & Insert Arrangements are on pages 2-5. First number represents Shell Size, second number is the Insert Arrangement. The dash is required. See MIL-STD-1560 or 1669 document for coordinates of inserts.

* Shell size designation for MIL-DTL-38999 Series I, II, III and IV and MIL-DTL-26482 Series 1 and 2.

4. CONTACT PCB STICKOUT		
Suffix	Shell Size*	Contact PCB Stickout Length B ± .015 Stickout
1	08	.120
1	09	.120
2	10	.185
3	12	.270
NA	14	
NA	15	
2	16	.185
3	16	.270
	18	
2	20	.185
3	20	.270
1	22	.120
2	22	.185
3	22	.270
1	23	.120
	24	
	25	

38999, Series I LJT, II JT, III TV, & SJT

Application Tools

The following data includes information pertaining to the application tools which have been established for crimping, inserting, and removing contacts incorporated in the TV, CTV and MIL-DTL-38999 Series III connectors. For additional information on coax, twinax and triax contact tools, see High Speed Contact section of this catalog.

All crimping tools included are the "full cycling" type and when used as specified in the installation instructions L-624 covering the TV, CTV and MS series connectors, will provide reliable crimped wire to contact terminations. There is a possibility of additional crimping tools other than those included being available at present or in the future for this specific application.

CRIMPING TOOLS

Contact Size/Type	Crimping Tool	Turret Die or Positioner
12 Pin and Socket	M22520/1-01	M22520/1-04
16 Pin and Socket	M22520/1-01 M22520/7-01	M22520/1-04 M22520/7-04
20 Pin and Socket	M22520/1-01 M22520/2-01 M22520/7-01	M22520/1-04 M22520/2-10 M22520/7-08
22, 22D, 22M Pin	M22520/2-01 M22520/7-01	M22520/2-09 M22520/7-07
22, 22D, 22M Socket Series I, III	M22520/2-01 M22520/7-01	M22520/2-07 M22520/7-05
22D Socket Series II	M22520/2-01 M22520/7-01	M22520/2-06 M22520/7-06
8 Twinax Center Pin and Socket	M22520/2-01	M22520/2-37
8 Twinax Intermediate Outer Pin & Socket	M22520/5-01	M22520/5-200

Contact Size/Type	Crimping Tool	Turret Die or Positioner
8 Coaxial Inner Pin and Socket	M22520/2-01	M22520/2-31
8 Coaxial Outer Pin and Socket	M22520/5-01	M22520/5-05 Die Closure B
	M22520/5-01	M22520/5-41 Die Closure B
	M22520/10-01	M22520/10-07 Die Closure B
16 Coaxial Inner Pin and Socket	M22520/2-01	M22520/2-35
16 Coaxial Outer Pin and Socket	M22520/4-01	M22520/4-02
12 Coaxial Inner Pin and Socket	M22520/2-01	M22520/2-34
12 Coaxial Outer Pin and Socket	M22520/31-01	M22520/31-02
10 (Power)	TP-201423	

Where 2 or 3 tools are listed for a contact size, only one tool and its die or positioner are required to crimp the contact. The above crimping tools and positioners are available from the approved tool manufacturer.

INSERTION TOOLS

Use with Contact Size	Plastic Tools		Metal Tools			
			Angle Type		Straight Type Commercial Part No.	
	MS Part Number	Color	MS Part No.	Commercial Part No.		Color
10 (Power	M81969/14-05*	Gray / (White)	M81969/8-11	†	†	Green
12	M81969/14-04*	Yellow / (White)	M81969/8-09	11-8674-12††	11-8794-12††	Yellow
16	M81969/14-03*	Blue / (White)	M81969/8-07	11-8674-16††	11-8794-16††	Blue
20	M81969/14-10*	Red / (Orange)	M81969/8-05	11-8674-20††	11-8794-20††	Red
22	M81969/14-09	Brown/White	M81969/8-03	11-8674-22††	11-8794-22††	Brown
22D, 22M	M81969/14-01*	Green / (White)	M81969/8-01	11-8674-24††	11-8794-24††	Black
8 Coaxial	None Required					
8 Twinax	None		None	None		Red

REMOVAL TOOLS

Use with Contact Size	Plastic Tools		Metal Tools				
				Angle Type		Straight Type Commercial Part No.	
	MS Part Number	Color	For Unwired Contacts Commercial Part No.	MS Part No.	Commercial Part No.		Color
10 (Power)	M81969/14-05*	(Gray) / White	†	M81969/8-12	†	†	Green / White
12	M81969/14-04*	(Yellow) / White	11-10050-11††	M81969/8-10	11-8675-12††	11-8795-12††	Yellow / White
16	M81969/14-03*	(Blue) / White	11-10050-10††	M81969/8-08	11-8675-16††	11-8795-16††	Blue / White
20	M81969/14-10*	(Orange) / Red	11-10050-9††	M81969/8-06	11-8675-20††	11-8795-20††	Red / Orange
22	M81969/14-09*	(Brown)/White	11-10050-8††	M81969/8-04	11-8675-22††	11-8795-22††	Brown/White
22D, 22M	M81969/14-01*	(Green) / White	11-10050-7††	M81969/8-02	11-8675-24††	11-8795-24††	Green / White
8 Coaxial	M81969/14-12	Green	None	None	11-9170††	DRK264-8†††	N/A
8 Twinax	M81969/14-12	Green	None	None	11-9170††	N/A	N/A

For information about contacts see page 30. The M81969/8, 11-8674, 11-8675, and 11-8794 metal contact insertion and removal tools will accommodate wires having the maximum outside diameter as follows: Contact size 12: dia. is .155, size 16: dia. is .109, size 20: dia. is .077, size 22D: dia. is .050. When wire diameters exceed those specified, the plastic tools must be used.

* Double end insertion/removal tool.

** Twinax insertion tools are available only in a straight type, metal version.

† To be determined.

†† Contact Daniels Manufacturing Co. or Astro Tool Corp. for availability.

††† Daniels Manufacturing Co. part number

WIRE STRIPPING

1. Strip wire to required length. (See Figure at right). When using hot wire stripping, do not wipe melted insulation material on wire strands; with mechanical strippers do not cut or nick strands.
2. See Table 1 for proper finished outside wire dimensions.
3. Twist strands together to form a firm bundle.
4. Insert stripped wire into contact applying slight pressure until wire insulation butts against wire well. Check inspection hole to see that wire strands are visible. If there are strayed wire strands, entire wire end should be re-twisted.

When wire is stripped and properly installed into contact, the next step is to crimp the wire inside the contact by using the proper crimping tool.

STRIPPING DIMENSIONS

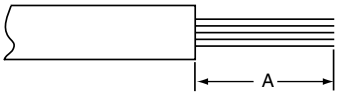

Wire Size	A
22. 22M, 22D	.125 (3.18)
20	.188 (4.77)
16	.188 (4.77)
12	.188 (4.77)

Table 1

Contact Size	Wire Dimension (inches)**	
	Min.	Max.
10	.135	.162
12	.097	.142
16	.065	.109
20	.040	.077
22	.034	.060
22M, 22D	.030	.050

** Min. diameters to insure moisture proof assembly; max. diameters to permit use of metal removal tools.

CRIMPING

See table on preceding page for recommended M22520 series crimping tools, turret head or positioner selection settings according to contact size, part number and wire gauge size.

1. Insert stripped wire into contact crimp pot. Wire must be visible through inspection hole.
2. Using correct crimp tool and locator, cycle the tool once to be sure the indentors are open, insert contact and wire into locator. Squeeze tool handles firmly and completely to insure a proper crimp. The tool will not release unless the crimp indentors in the tool head have been fully actuated.
3. Release crimped contact and wire from tool. Be certain the wire is visible through inspection hole in contact.

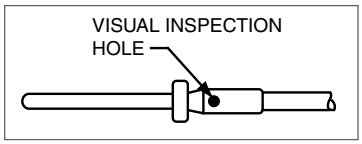

Examples of M22520 Series Crimping Tools:
Shown top: tool used for small size 22, 22D and 22M contacts.
Shown bottom: tool used for size 20, 16 or 12 contacts and has a positioner that can be dialed for each contact size.

CONTACT INSERTION

1. First remove hardware from the plug and receptacle and slide the hardware over wires in proper sequence.

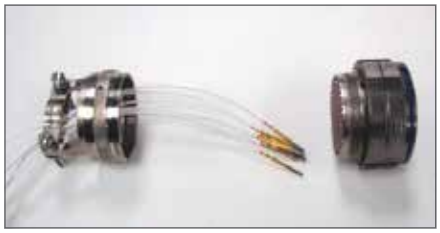

Note: All plastic tools are double-end-ed. The colored side is the insertion tool and the white side is the removal tool.

2. Use proper plastic or metal insertion tool for corresponding contact. (Consult Insertion Tool table on preceding page). Slide correct tool (with plastic tool use colored end) over wire insulation and slide forward until tool bottoms against rear contact shoulder.

Plastic tool with contact in proper position.

Metal tool with contact.

3. Next align the tool and contact up to the properly identified cavity at rear of connector plug. Use firm, even pressure; do not use excessive pressure. It is recommended to start at the center cavity. Contact must be aligned with grommet hole and not inserted at an angle. Push forward until contact is felt to snap into position within insert.

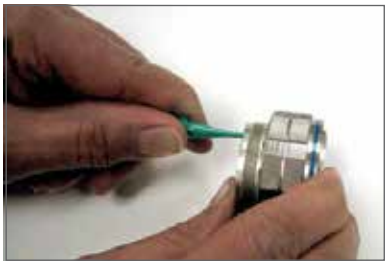

Continued on next page.

Installation Instructions, cont.

CONTACT INSERTION, CONT.

4. Remove tool and pull back lightly on wire, making sure contact stays properly seated and isn't dragged back with the tool. Repeat operation with remainder of contacts to be inserted, beginning with the center cavity and working outward in alternating rows.

5. After all contacts are inserted, fill any empty cavities with wire sealing plugs. (Refer to sealing plug charts for Series III on page 29, for Series I & II and SJT see page 30-31.

6. Reassemble plug or receptacle hardware - slide forward and tighten using connector pliers. Connector holding tools are recommended while tightening back accessories. When using strain relief, center wires at bar clamp. Slide clamp grommet into position and tighten clamp bar screws. When tightening screws, pressure should be applied in the same direction that clamp is threaded to rear threads of connector. When not using clamp grommet, build up wire bundle with vinyl tape so clamp bar will maintain pressure on wires.

CAUTION, when inserting or removing contacts, do not spread or rotate tool tips.

CONTACT REMOVAL

1. Remove hardware from plug or receptacle and slide hardware back along wire bundle.

2. Use proper plastic or metal removal tool for corresponding contact. (Consult Removal Tool table on page 167). Slide correct size tool over wire insulation.

Use white end of plastic tool for removal of contacts.

3. Insert plastic or metal removal tool into contact cavity until tool tips enter rear grommet and come to a positive stop. Hold tool tip firmly against positive stop on contact shoulder. Grip wire and simultaneously remove tool and contact. (On occasion, it may be necessary to remove tool, rotate 90° and reinsert.)

Removal of contacts with metal tool.