Infrared Emitting Diode, 950 nm, GaAlAs, MQW

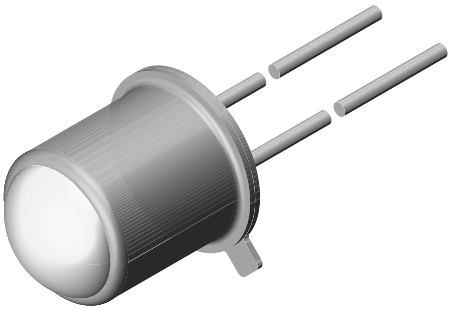

FEATURES

- Package type: leaded
- Package form: TO-18
- Dimensions (in mm): Ø 4.7
- Peak wavelength: λ_p = 950 nm
- High reliability
- High radiant power
- High radiant intensity
- Angle of half intensity: φ = ± 8°
- Low forward voltage
- Good spectral matching with Si photodetectors
- Material categorization: for definitions of compliance please see www.vishay.com/doc?99912

Pb-free

e4

RoHS COMPLIANT

DESCRIPTION

TSTS7300 is an infrared, 950 nm emitting diode in GaAlAs multi quantum well (MQW) technology in a hermetically sealed TO-18 package with lens.

APPLICATIONS

- Radiation source in near infrared range

PRODUCT SUMMARY

COMPONENT	I_e (mW/sr)	φ (°)	λ_p (nm)	t_r (ns)
TSTS7300	95	± 8	950	15

Note

- Test conditions see table “Basic Characteristics”

ORDERING INFORMATION

ORDERING CODE	PACKAGING	REMARKS	PACKAGE FORM
TSTS7300	Bulk	MOQ: 1000 pcs, 1000 pcs/bulk	TO-18

Note

- MOQ: minimum order quantity

ABSOLUTE MAXIMUM RATINGS (T_{amb} = 25 °C, unless otherwise specified)

PARAMETER	TEST CONDITION	SYMBOL	VALUE	UNIT
Reverse voltage		V_R	5	V
Forward current		I_F	100	mA
Power dissipation		P_V	170	mW
Junction temperature		T_j	125	°C
Ambient temperature range		T_{amb}	-40 to +85	°C
Storage temperature range		T_{stg}	-40 to +110	°C
Soldering temperature	t ≤ 5 s, 2 mm from case	T_{sd}	260	°C
Thermal resistance junction to ambient	J-STD-051	R_{thJA}	500	K/W

For technical questions, contact: sensorstechsupport@vishay.com
THIS DOCUMENT IS SUBJECT TO CHANGE WITHOUT NOTICE. THE PRODUCTS DESCRIBED HEREIN AND THIS DOCUMENT ARE SUBJECT TO SPECIFIC DISCLAIMERS, SET FORTH AT www.vishay.com/doc?91000

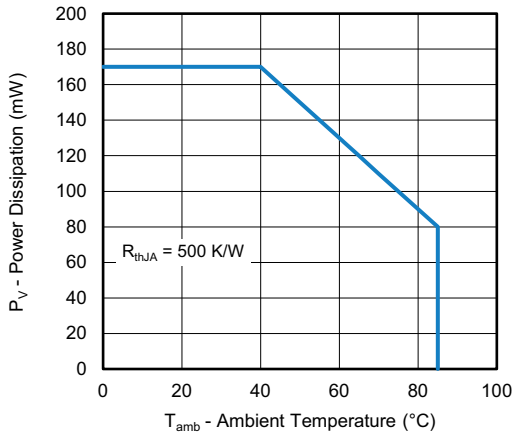

Fig. 1 - Power Dissipation Limit vs. Ambient Temperature

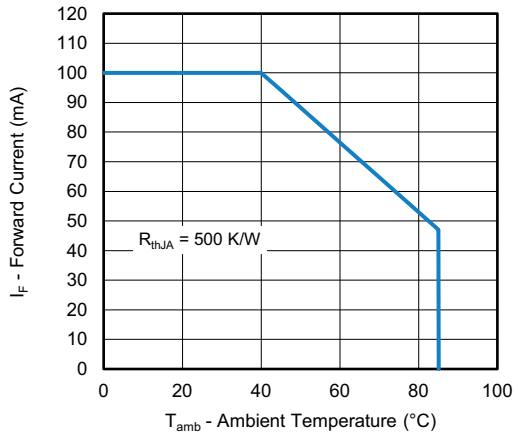

Fig. 2 - Forward Current Limit vs. Ambient Temperature

BASIC CHARACTERISTICS (T_{amb} = 25 °C, unless otherwise specified)						
PARAMETER	**TEST CONDITION**	**SYMBOL**	**MIN.**	**TYP.**	**MAX.**	**UNIT**
Forward voltage	I_F = 100 mA, t_p = 20 ms	V_F	-	1.4	1.7	V
	I_F = 1 A, t_p = 100 µs	V_F	-	2.2	-	V
Temperature coefficient of V_F	I_F = 100 mA, t_p = 20 ms	TK_{VF}	-	-1.1	-	mV/K
Reverse current		I_R	Not designed for reverse operation			µA
Junction capacitance	V_R = 0 V, f = 1 MHz, E = 0 mW/cm^2	C_j	-	56	-	pF
Radiant intensity	I_F = 100 mA, t_p = 20 ms	I_e	55	95	230	mW/sr
Radiant power	I_F = 100 mA, t_p = 20 ms	ϕ_e	-	17	-	mW
Temperature coefficient of ϕ_e	I_F = 100 mA, t_p = 20 ms	$TK\phi_e$	-	-0.5	-	%/K
Angle of half intensity		φ	-	± 8	-	°
Peak wavelength	I_F = 100 mA, t_p = 20 ms	λ_p	-	950	-	nm
Spectral bandwidth		$\Delta\lambda$	-	30	-	nm
Temperature coefficient of λ_p	I_F = 100 mA, t_p = 20 ms	$TK\lambda_p$	-	0.2	-	%/K
Rise time	I_F = 100 mA	t_r	-	15	-	ns
Fall time	I_F = 100 mA	t_f	-	15	-	ns

For technical questions, contact: sensorstechsupport@vishay.com
THIS DOCUMENT IS SUBJECT TO CHANGE WITHOUT NOTICE. THE PRODUCTS DESCRIBED HEREIN AND THIS DOCUMENT ARE SUBJECT TO SPECIFIC DISCLAIMERS, SET FORTH AT www.vishay.com/doc?91000

BASIC CHARACTERISTICS (T_{amb} = 25 °C, unless otherwise specified)

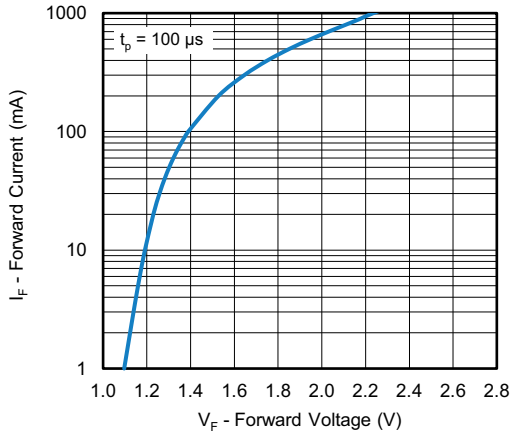

Fig. 3 - Forward Current vs. Forward Voltage

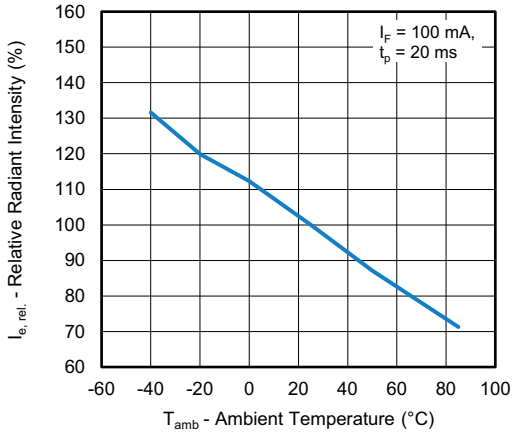

Fig. 6 - Relative Radiant Intensity vs. Ambient Temperature

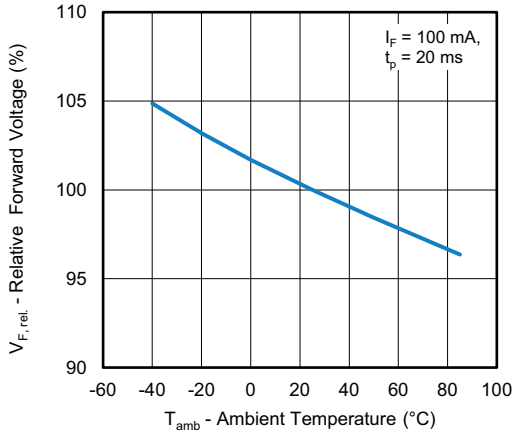

Fig. 4 - Forward Voltage vs. Ambient Temperature

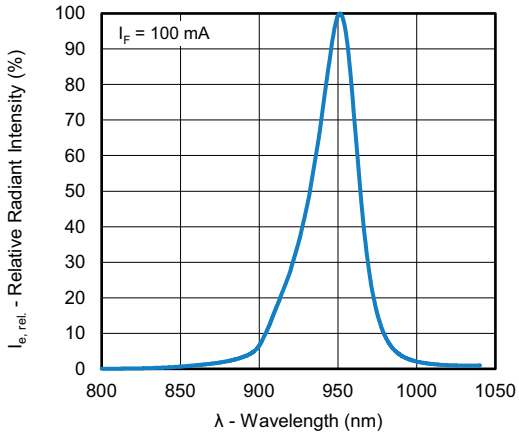

Fig. 7 - Relative Radiant Intensity vs. Wavelength

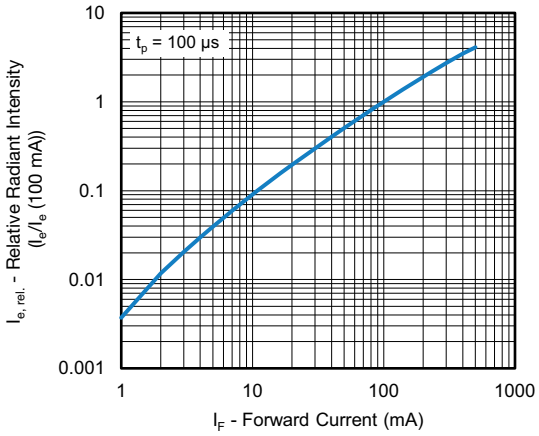

Fig. 5 - Relative Radiant Intensity vs. Forward Current

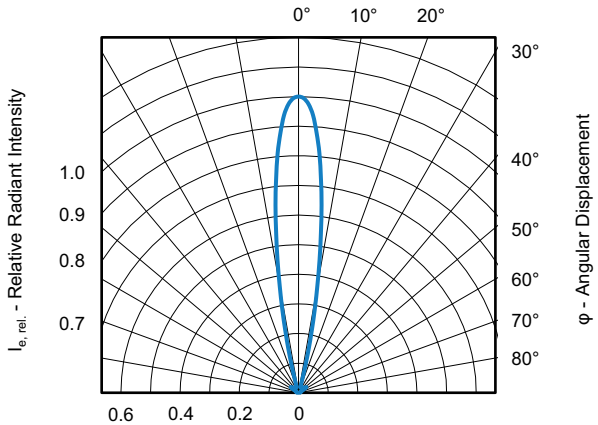

Fig. 8 - Relative Radiant Intensity vs. Angular Displacement

For technical questions, contact: sensorstechsupport@vishay.com
THIS DOCUMENT IS SUBJECT TO CHANGE WITHOUT NOTICE. THE PRODUCTS DESCRIBED HEREIN AND THIS DOCUMENT ARE SUBJECT TO SPECIFIC DISCLAIMERS, SET FORTH AT www.vishay.com/doc?91000

PACKAGE DIMENSIONS in millimeters

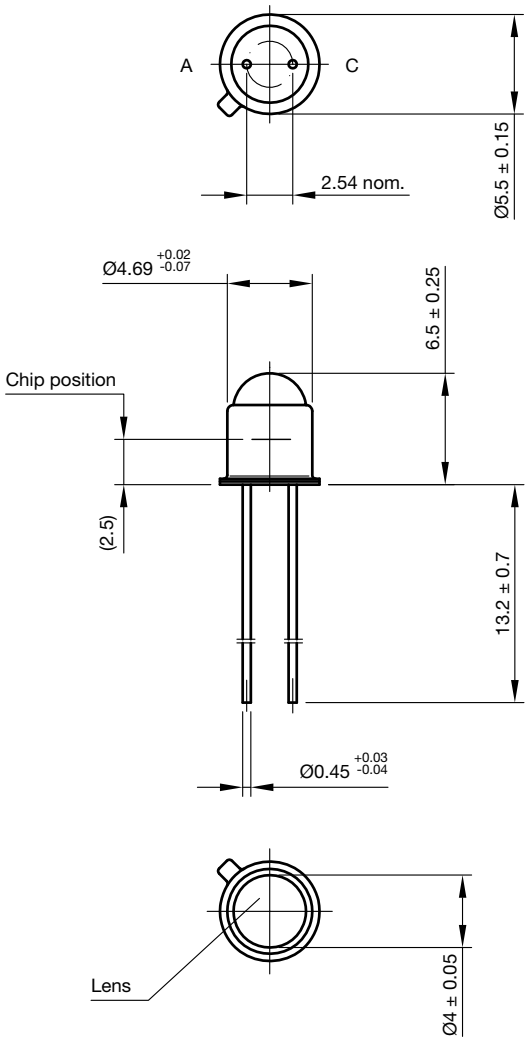

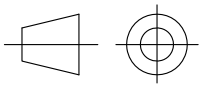

technical drawings according to DIN specifications

Drawing-No.: 6.503-5022.02-4

Issue: 2VK; 25.03.2024

For technical questions, contact: sensorstechsupport@vishay.com

THIS DOCUMENT IS SUBJECT TO CHANGE WITHOUT NOTICE. THE PRODUCTS DESCRIBED HEREIN AND THIS DOCUMENT ARE SUBJECT TO SPECIFIC DISCLAIMERS, SET FORTH AT www.vishay.com/doc?91000

Disclaimer

ALL PRODUCT, PRODUCT SPECIFICATIONS AND DATA ARE SUBJECT TO CHANGE WITHOUT NOTICE TO IMPROVE RELIABILITY, FUNCTION OR DESIGN OR OTHERWISE.

Vishay Intertechnology, Inc., its affiliates, agents, and employees, and all persons acting on its or their behalf (collectively, “Vishay”), disclaim any and all liability for any errors, inaccuracies or incompleteness contained in any datasheet or in any other disclosure relating to any product.

Vishay makes no warranty, representation or guarantee regarding the suitability of the products for any particular purpose or the continuing production of any product. To the maximum extent permitted by applicable law, Vishay disclaims (i) any and all liability arising out of the application or use of any product, (ii) any and all liability, including without limitation special, consequential or incidental damages, and (iii) any and all implied warranties, including warranties of fitness for particular purpose, non-infringement and merchantability.

Statements regarding the suitability of products for certain types of applications are based on Vishay's knowledge of typical requirements that are often placed on Vishay products in generic applications. Such statements are not binding statements about the suitability of products for a particular application. It is the customer's responsibility to validate that a particular product with the properties described in the product specification is suitable for use in a particular application. Parameters provided in datasheets and / or specifications may vary in different applications and performance may vary over time. All operating parameters, including typical parameters, must be validated for each customer application by the customer's technical experts. Product specifications do not expand or otherwise modify Vishay's terms and conditions of purchase, including but not limited to the warranty expressed therein.

Hyperlinks included in this datasheet may direct users to third-party websites. These links are provided as a convenience and for informational purposes only. Inclusion of these hyperlinks does not constitute an endorsement or an approval by Vishay of any of the products, services or opinions of the corporation, organization or individual associated with the third-party website. Vishay disclaims any and all liability and bears no responsibility for the accuracy, legality or content of the third-party website or for that of subsequent links.

Vishay products are not designed for use in life-saving or life-sustaining applications or any application in which the failure of the Vishay product could result in personal injury or death unless specifically qualified in writing by Vishay. Customers using or selling Vishay products not expressly indicated for use in such applications do so at their own risk. Please contact authorized Vishay personnel to obtain written terms and conditions regarding products designed for such applications.

No license, express or implied, by estoppel or otherwise, to any intellectual property rights is granted by this document or by any conduct of Vishay. Product names and markings noted herein may be trademarks of their respective owners.

© 2025 VISHAY INTERTECHNOLOGY, INC. ALL RIGHTS RESERVED

THIS DOCUMENT IS SUBJECT TO CHANGE WITHOUT NOTICE. THE PRODUCTS DESCRIBED HEREIN AND THIS DOCUMENT ARE SUBJECT TO SPECIFIC DISCLAIMERS, SET FORTH AT www.vishay.com/doc?91000