TD228C-5001SY ✔ ACTIVE

CII

TE Internal #: 2-1617802-6

Time Delay Relay, DC, 2 Form C DPDT-CO, 10 A Contact Rating, Chassis Mount, Hermetically Sealed, 125 °C [257 °F]

View on TE.com >

Relays & Contactors > Electromechanical Relays



Relay & Contactor Type: **Time Delay Relay**

Contact Arrangement: **2 Form C DPDT-CO**

Current Type: **DC**

Contact Current Rating: **10 A**

Main Termination & Connection Type: **Solder Hook Terminals**

Features

Product Type Features

Relay & Contactor Type	Time Delay Relay

Configuration Features

Contact Arrangement	2 Form C DPDT-CO

Electrical Characteristics

Input Voltage	28 VDC
Contact Current Rating	10 A

Body Features

Enclosure Type	Hermetically Sealed

Contact Features

Contact Material	Silver Cadmium Oxide

Termination Features

Main Termination & Connection Type	Solder Hook Terminals
Coil Termination & Connection Type	Solder Hook Terminals

Mechanical Attachment

Product Mounting Feature Type	Mounting Brackets
Product Mount Type	Chassis Mount

Dimensions

Product Width	25.79 mm[1.015 in]
Product Length	43.6 mm[1.717 in]
Product Height	25.4 mm[1 in]

Usage Conditions

Operating Temperature Range	-55 – 125 °C
Environmental Ambient Temperature (Max)	125 °C[257 °F]

Operation/Application

Indicator Type	No Indicator
Repeatability (Max)	±10%
Type of Control	Fixed
Mode of Operation	Delay on Operate
Delay Time	5 seconds
Current Type	DC

Other

Contact Current Class	>5 – ≤10 A
Height Class (Mechanical)	>22 – ≤27 mm[>.866 – ≤1.063 in]
Length Class (Mechanical)	>33 – ≤45 mm[>1.299 – ≤1.772 in]
Width Class (Mechanical)	>22 – ≤33 mm[>.866 – ≤1.299 in]

Product Compliance

For compliance documentation, visit the product page on TE.com>

EU RoHS Directive 2011/65/EU	Not Compliant
EU ELV Directive 2000/53/EC	Not Compliant
China RoHS 2 Directive MIIT Order No 32, 2016	有害物质含量超出标准 Restricted Substance(s) Above Threshold
EU REACH Regulation (EC) No. 1907/2006	Current ECHA Candidate List: JUNE 2025 (250) Candidate List Declared Against: JUNE 2025 (250) SVHC > Threshold: Cadmium oxide (15% in Component) **Article Safe Usage Statements:** Use personal protective equipment as required. Do not eat, drink or smoke when using this product. Recycle if possible and dispose of the article by following all applicable governmental regulations relevant to your geographic location.
Halogen Content	Low Halogen - Br, Cl, F < 900 ppm per homogenous material. Also BFR/CFR/PVC Free

Solder Process Capability

Not lead free process capable

Product Compliance Disclaimer

This information is provided based on reasonable inquiry of our suppliers and represents our current actual knowledge based on the information they provided. This information is subject to change. The part numbers that TE has identified as EU RoHS compliant have a maximum concentration of 0.1% by weight in homogenous materials for lead, hexavalent chromium, mercury, PBB, PBDE, DBP, BBP, DEHP, DIBP, and 0.01% for cadmium, or qualify for an exemption to these limits as defined in the Annexes of Directive 2011/65/EU (RoHS2). Finished electrical and electronic equipment products will be CE marked as required by Directive 2011/65/EU. Components may not be CE marked. Additionally, the part numbers that TE has identified as EU ELV compliant have a maximum concentration of 0.1% by weight in homogenous materials for lead, hexavalent chromium, and mercury, and 0.01% for cadmium, or qualify for an exemption to these limits as defined in the Annexes of Directive 2000/53/EC (ELV). Regarding the REACH Regulation, the information TE provides on SVHC in articles for this part number is based on the latest European Chemicals Agency (ECHA) 'Guidance on requirements for substances in articles' posted at this URL: https://echa.europa.eu/guidance-documents/guidance-on-reach

Compatible Parts



TE Part # 1-1617749-8
FCA-210-1022M=M83536/10-022M

Customers Also Bought



TE Part #EC0437-000
06153411

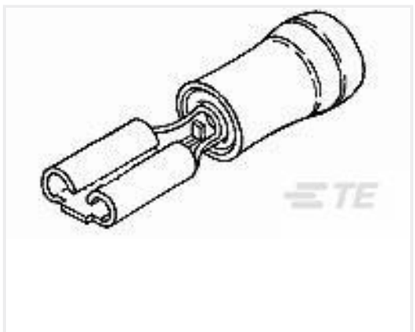

TE Part #165565-6
TERM,RECPT,PIDG,110 FAST, 22-16, PHBR,AU



TE Part #342117-1
22-16 F.E.P.G. SPADE 4BA STUD



TE Part #6-1755142-4
7022WDIM=RLY,STD,OFF,2P,96V,50S,I,M

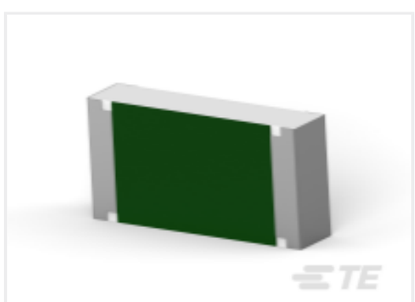

TE Part #9-2176397-8
3502 11K 1%



TE Part #2176398-2
3502 15K 1%

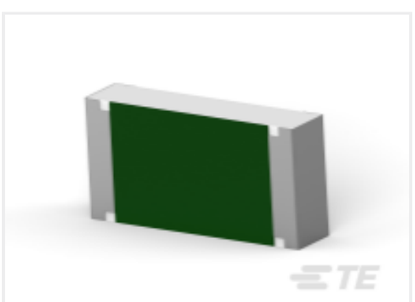

TE Part #1-2176398-4
3502 47K 1%



TE Part #342066
16-14 H.D.R/T 1/2" STUD BLACK



TE Part #7-1472995-0
7012WDS=RLY,STD,ON,2P,96V,50S,S



TE Part #1755170-1
7022OCIM=RLY,STD,OFF,2P,24V,15S,I,M

Documents

Product Drawings

TD228C-5001SY= TDFO 5 SEC

English

Datasheets & Catalog Pages

High_Performance_Relays_Section5

English

relays_brochure

English