STM025M6AN ✔ ACTIVE

Nanonics

TE Internal #: 2-1589487-9

25 Position, Receptacle, Wire-to-Board, Board Mount, 1.27 mm [.05 in] Centerline, Printed Circuit Board, Power, -200 – 200 °C [-328 – 392 °F]

View on TE.com >

Connectors > D-Shaped Connectors > DUALOBE Receptacle Connectors: Metal Shell, 25 Pin/2 Row

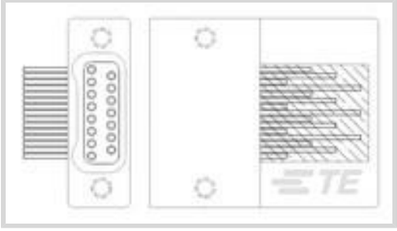

Number of Positions: **25**

Connector & Housing Type: **Receptacle**

Connector System: **Wire-to-Board**

Connector Mounting Type: **Board Mount**

Centerline (Pitch): **1.27 mm [.05 in]**

All DUALOBE Receptacle Connectors: Metal Shell, 25 Pin/2 Row (17)

Features

Product Type Features

Connector & Housing Type	Receptacle
Connector System	Wire-to-Board
Sealable	No
Connector & Contact Terminates To	Printed Circuit Board

Configuration Features

Number of Positions	25

Contact Features

Contact Type	Socket
Contact Current Rating (Max)	1 A
Contact Options	Installed

Termination Features

Termination Method to PCB	Through Hole - Solder
Termination Method to Wire & Cable	Preterminated Flying Leads

Mechanical Attachment

Connector Mounting Type	Board Mount

Housing Features

Centerline (Pitch)	1.27 mm[.05 in]

Usage Conditions

Operating Temperature Range	-200 – 200 °C[-328 – 392 °F]

Operation/Application

Circuit Application	Power

Product Compliance

For compliance documentation, visit the product page on TE.com>

EU RoHS Directive 2011/65/EU	Not Compliant
EU ELV Directive 2000/53/EC	Compliant with Exemptions
China RoHS 2 Directive MIIT Order No 32, 2016	有害物质含量超出标准 Restricted Substance(s) Above Threshold
EU REACH Regulation (EC) No. 1907/2006	Current ECHA Candidate List: JUNE 2025 (250) Candidate List Declared Against: JUNE 2025 (250) SVHC > Threshold: Pb (40% in Component) Article Safe Usage Statements: Do not eat, drink or smoke when using this product. Wash thoroughly after handling. Recycle if possible and dispose of the article by following all applicable governmental regulations relevant to your geographic location.
Halogen Content	Low Halogen - Br, Cl, F < 900 ppm per homogenous material. Also BFR/CFR/PVC Free
Solder Process Capability	Not lead free process capable

Product Compliance Disclaimer

This information is provided based on reasonable inquiry of our suppliers and represents our current actual knowledge based on the information they provided. This information is subject to change. The part numbers that TE has identified as EU RoHS compliant have a maximum concentration of 0.1% by weight in homogenous materials for lead, hexavalent chromium, mercury, PBB, PBDE, DBP, BBP, DEHP, DIBP, and 0.01% for cadmium, or qualify for an exemption to these limits as defined in the Annexes of Directive 2011/65/EU (RoHS2). Finished electrical and electronic equipment products will be CE marked as required by Directive 2011/65/EU. Components may not be CE marked. Additionally, the part numbers that TE has identified as EU ELV compliant have a maximum concentration of 0.1% by weight in homogenous materials for lead, hexavalent chromium, and mercury, and 0.01% for cadmium, or qualify for an exemption to these limits as defined in the Annexes of Directive 2000/53/EC (ELV). Regarding the REACH Regulation, the information TE provides on SVHC in articles for this part number is based on the latest European Chemicals Agency (ECHA) 'Guidance on requirements for substances in articles' posted at this URL: https://echa.europa.eu/guidance-documents/guidance-on-reach

Compatible Parts

TE Part # 9-1589665-4
302-0004-02 = CLEADFRAME

Customers Also Bought

TE Part #114017-ZZ
SEALING PLUG, SIZE 12/16, WHT

TE Part #DT04-2P
REC, 2P, GRY, N

TE Part #DT06-2S
PLG, 2P, GRY, N

TE Part #CAT-D48-ST273
DEUTSCH Connector Solid Contacts

TE Part #CAT-D487-W416
Wedgelocks: DEUTSCH DT

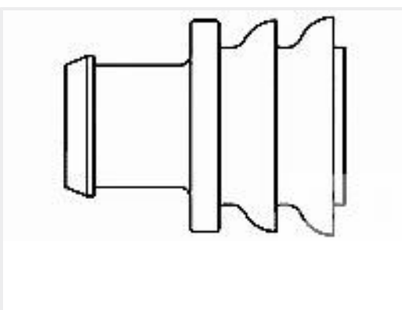

TE Part #281934-2
SINGLE WIRE SEAL

TE Part #CAT-AM71-CH8172
AMP SUPERSEAL 1.5MM, CONNECTOR HOUSING

Documents

Product Drawings

STM025M6AN = THRU-HOLE

English

CAD Files

3D PDF

3D

Customer View Model

ENG_CVM_CVM_2-1589487-9_T_c-2-1589487-9-t.2d_dxf.zip

English

Customer View Model

ENG_CVM_CVM_2-1589487-9_T_c-2-1589487-9-t.3d_igs.zip

English

Customer View Model

ENG_CVM_CVM_2-1589487-9_T_c-2-1589487-9-t.3d_stp.zip

English

By downloading the CAD file I accept and agree to the Terms and Conditions of use.

Datasheets & Catalog Pages

1589487 Nanonics Cross Reference

English