Honeywell
THE POWER OF **CONNECTED**

Bipolar, Latching, and Unipolar Hall-effect Digital Position Sensor ICs: SS400 Series, SS500 Series

32320997
Issue B

Datasheet

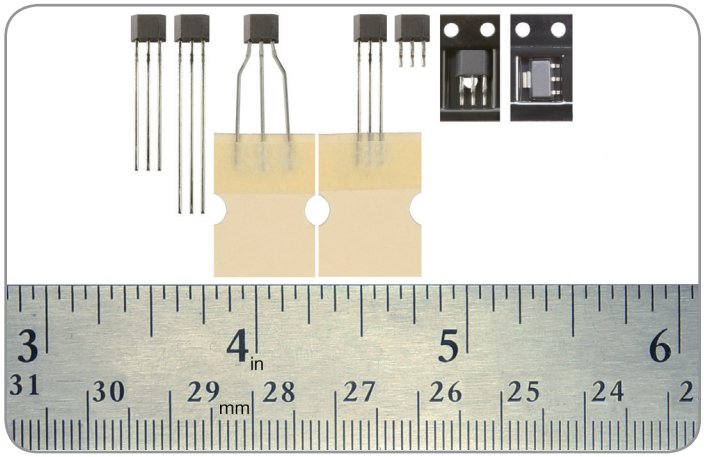

DESCRIPTION

The SS400 Series and SS500 Series are small and versatile digital Hall-effect devices that are operated by the magnetic field from a permanent magnet or an electromagnet, and are designed to respond to alternating North and South poles, or to a South pole only. They are available in bipolar, latching or unipolar magnetics. On-board regulation provides stable operation over a 3.8 Vdc to 30 Vdc supply voltage range. These sensors are capable of continuous 20 mA sinking output and may be cycled as high as 50 mA max. The 3.8 V capability allows for use in many potential low voltage applications. The digital, open collector sinking-type output is easily interfaced with a wide variety of electronic circuits. To provide reliable products and consistent quality, the SS400 Series products are tested at both 25°C [75°F] and 125°C [257°F]. All catalog listings are qualified for operation up to 150°C [302°F]. For design flexibility, these product are available in the following package styles:

- **SS400 Series:** Flat TO-92-style:
  - **SS4XX:** Straight standard leads, bulk pack
  - **SS4XX-L:** Straight long leads, bulk pack
  - **SS4XX-T2:** Formed leads, ammopack tape-in-box
  - **SS4XX-T3:** Straight standard leads, ammopack tape-in-box
  - **SS4XX-S:** Surface mount, bulk pack
  - **SS4XX-SP:** Surface mount, pocket tape and reel
- **SS500 Series:** SOT-89B, pocket tape and reel

FEATURES

- Quad Hall IC design minimizes mechanical stress effects
- Temperature-compensated magnetics help provide stable operation over a wide temperature range of -40°C to 150°C [-40°F to 302°F]
- Broad, inclusive supply voltage capability from 3.8 Vdc to 30 Vdc for application flexibility
- Digital, open collector sinking output for easy interfacing with a variety of common electronic circuits
- High sensitivity versions available for potential applications requiring high accuracy or wide gaps
- Bipolar, latching or unipolar magnetics

POTENTIAL APPLICATIONS

- **Industrial:** Speed and RPM (revolutions per minute) sensing, tachometer, counter pickup, flow-rate sensing, brushless dc (direct current) motor commutation, motor and fan control, robotics control
- **Transportation:** Speed and RPM (revolutions per minute) sensing, tachometer, counter pickup, motor and fan control, electric window lift, convertible roof position
- **Medical:** Motor assemblies, medication dispensing control

PORTFOLIO

Other bipolar, latching and unipolar Hall-effect digital sensor ICs include:

- SS360NT, SS360ST, SS360ST-10K, SS460S, SS460S-T2
- VF360NT, VF360ST, VF460S
- SS361RT, SS461R
- SS361CT, SS461C
- SS340RT, SS440R Series
- SS360PT, SS460P, SS460P-T2
- SS311PT, SS411P

Table 1. Performance Specifications (Applies to both SS400 series and 500 Series, unless otherwise noted.)

Characteristic	Condition	Min.	Typ.	Max.	Unit
Supply voltage (V_s)[1]	—	3.8	—	30	Vdc
Rated sinking current (I_{sink})	—	—	20	—	mA
Current consumption:					
on:					
SS400 Series	V_s = 30 Vdc, I_{sink} = 20 mA, -40°C < T < 150°C, B > operate max.	—	—	10.0	mA
SS500 Series	V_s = 30 Vdc, -40°C < T < 150°C, B > operate max.	—	—	10.0	
off:					
SS400 Series	V_s = 30 Vdc, I_{sink} = 20 mA, -40°C < T < 150°C, B > operate max.	—	—	9.0	
SS500 Series	V_s = 30 Vdc, I_{sink} = 20 mA, -40°C < T < 150°C, B > release min.	—	—	10.0	
V_{sat}:					
SS400 Series	V_s = 3.8 Vdc, I_{sink} = 20 mA, B > operate max.	—	—	0.4	V
SS500 Series	V_s = 3.8 Vdc, B > operate max.	—	—	0.4	
Output leakage current:					
SS400 Series	V_s = 24 V, Vout = 30 V, B < release min.	—	—	0.4	uA
SS500 Series	—	—	—	10.0	
Output switching time:					
rise	V_s = 12 V, R_L = 1.6 kOhm, C_L = 20 pF, T = 25°C [77°F]	—	—	1.5	us
fall	V_s = 12 V, R_L = 1.6 kOhm, C_L = 20 pF, T = 25°C [77°F]	—	—	1.5	
Operating temperature	—	-40[-40]	—	150[302]	°C [°F]
Storage temperature	—	-50[-58]	—	150[302]	°C [°F]
Soldering temp. and time:					
SS400 Series	wave soldering process: 250°C to 260°C [482°F to 500°F] for 3 s max.				
SS500 Series	infrared reflow process: peak temperature 245°C [473°F] for 10 s max.				

[1]For supply voltages above 24 Vdc, a capacitor may be needed between the output and supply pins to ensure proper operation.

NOTICE
These Hall-effect sensor ICs may have an initial output in either the ON or OFF state if powered up with an applied magnetic field in the differential zone (applied magnetic field >Brp and <Bop). Honeywell recommends allowing 10 us after supply voltage has reached 5 V for the output voltage to stabilize.

NOTICE
The magnetic field strength (Gauss) required to cause the switch to change state (operate and release) will be as specified in the magnetic characteristics. To test the switch against the specified limits, the switch must be placed in a uniform magnetic field.

CAUTION
ELECTROSTATIC SENSITIVE DEVICES
DO NOT OPEN OR HANDLE EXCEPT AT A STATIC FREE WORKSTATION
ESD SENSITIVITY: CLASS 3

Figure 1. Circuit Diagram

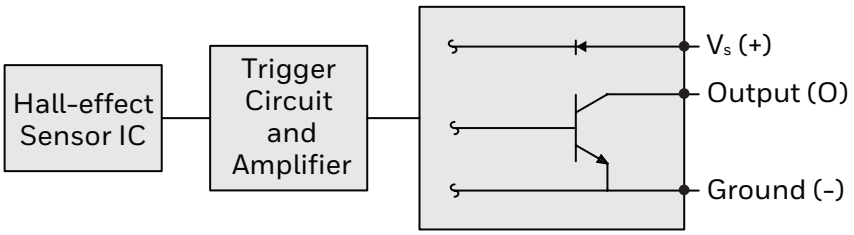

Table 2. Absolute Maximum Specifications

Characteristic	Min.	Typ.	Max.	Unit
Supply voltage (V_s)	-1	—	30	V
Applied output voltage (V_{out}):				V
SS400 Series	-0.5	—	30	
SS500 Series (off)	—	—	30	
Output current (I_{sink}):				mA
V_s = -1 Vdc to 24 Vdc	—	—	50	
V_s = 24 Vdcto 25 Vdc	—	—	37	
V_s = 25 Vdc to 26 Vdc	—	—	33	
V_s = 26 Vdc to 27 Vdc	—	—	28	
V_s = 27 Vdc to 28 Vdc	—	—	24	
V_s = 28 Vdc to 29 Vdc	—	—	19	
V_s = 29 Vdc to 30 Vdc	—	—	15	
Magnetic flux	—	—	no limit	Gauss

NOTICE

Absolute maximum ratings are the extreme limits the device will momentarily withstand without damage to the device. Electrical and mechanical characteristics are not guaranteed if the rated voltage and/or currents are exceeded, nor will the device necessarily operate at absolute maximum ratings.

Figure 2. Magnetic Activation

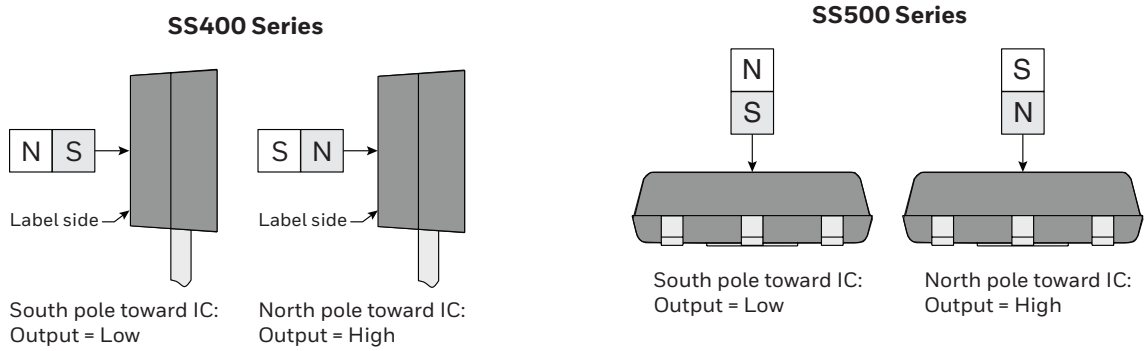

Figure 3. Circuit Diagrams

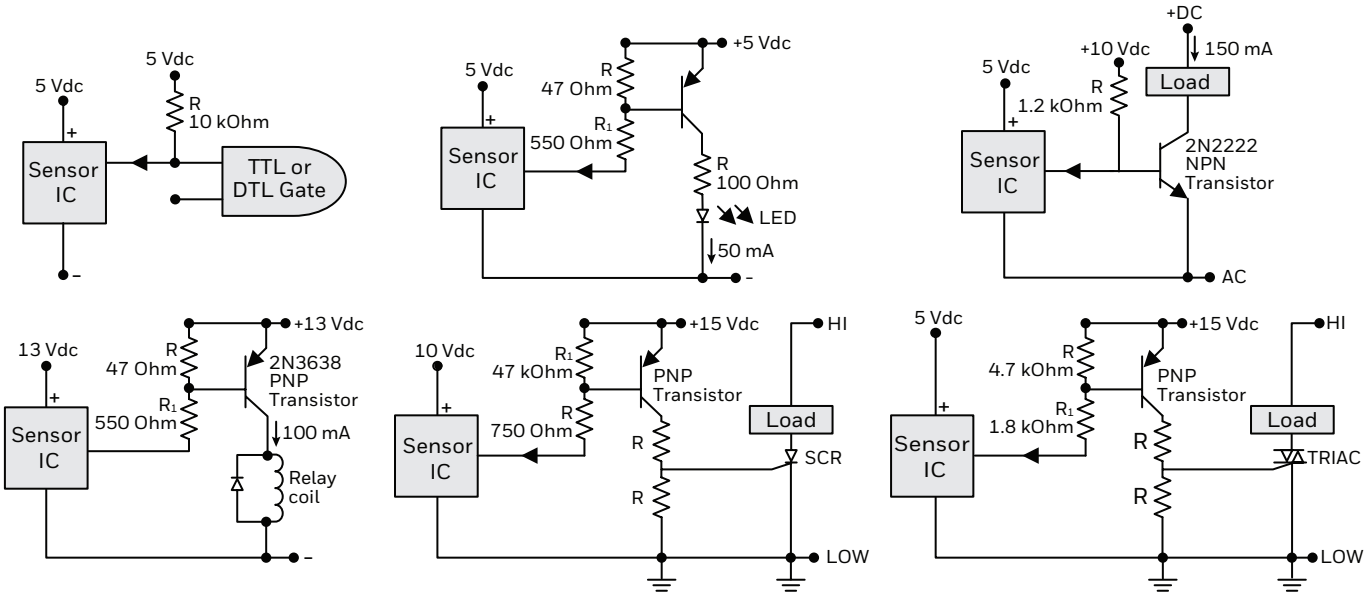

Table 3. Magnetic Specifications

Temperature	Operating Characteristic	Magnetic Characteristic (Gauss)													
		Bipolar				Unipolar						Latching			
		SS411	SS511AT	SS413	SS513AT	SS441	SS541AT	SS443	SS543AT	SS449	SS549AT	SS461	SS561AT	SS466	SS566AT
-40°C [-40°F]	**operate:**														
	minimum	NS		NS		50		110		285		5	—	100	
	maximum	70		140		135		215		435		110	100	200	
	release:														
	minimum	-70		-140		20		80		210		-110	-100	-200	
	maximum	NS		NS		120		190		360		-5	-5	-100	
	differential (min.)	15		20		15		25		30		50	50	200	
0°C [0°F]	**operate:**														
	minimum	NS		NS		53		110		305		5		100	
	maximum	65		140		117		190		400		90		185	
	release:														
	minimum	-65		-140		20		80		230		-90		-185	
	maximum	NS		NS		99		165		325		-5		-100	
	differential (min.)	15		20		15		25		30		50		200	
25°C [77°F]	**operate:**														
	minimum	NS		NS		55		110		310		10		100	
	maximum	60		140		115		180		390		85		180	
	release:														
	minimum	-60		-140		20		75		235		-85		-180	
	maximum	NS		NS		95		155		315		-10		-100	
	differential (min.)	15		20		20		25		30		50		200	
85°C [185°F]	**operate:**														
	minimum	NS		NS		45		90		290	—	10		95	
	maximum	60		140		120		180		400	400	85		180	
	release:														
	minimum	-60		-140		15		70		215	315	-85		-180	
	maximum	NS		NS		105		165		325	—	-10		-95	
	differential (min.)	12		20		15		15		30	30	50		190	
125°C [257°F]	**operate:**														
	minimum	NS		NS		40		80		270	290	5		80	
	maximum	65		140		123		190		410	400	100		180	
	release:														
	minimum	-65		-140		15		60		200	215	-100		-180	
	maximum	NS		NS		115		180		340	325	-5		-80	
	differential (min.)	12		20		8		10		30	30	50		160	
150°C [302°F]	**operate:**														
	minimum	NS		NS		35		65		260		5		70	
	maximum	70		140		125		200		420		110		185	
	release:														
	minimum	-70		-140		10		55		185		-110		-185	
	maximum	NS		NS		120		195		345		-5		-70	
	differential (min.)	10		20		5		5		30		50		140	

Figure 4. Operate and Release Point Performance Graphics

SS411/SS511AT

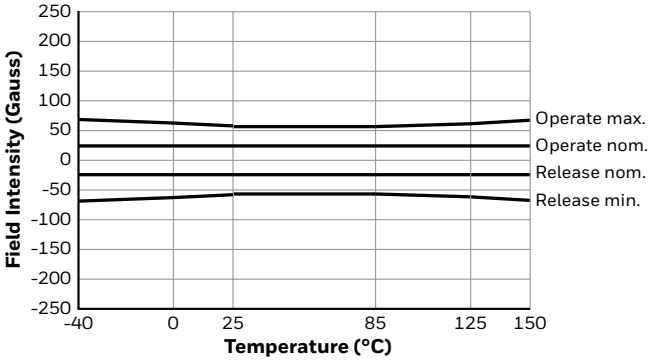

SS413/SS513AT

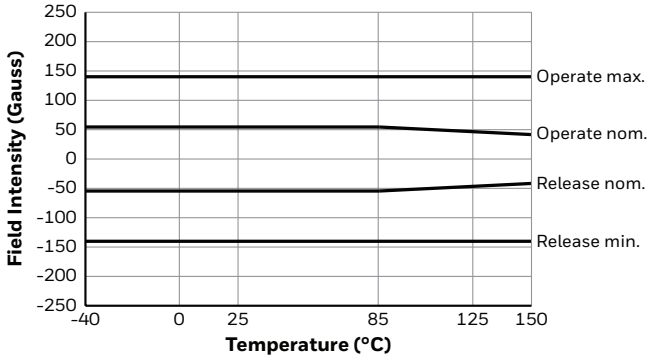

SS441/SS541AT

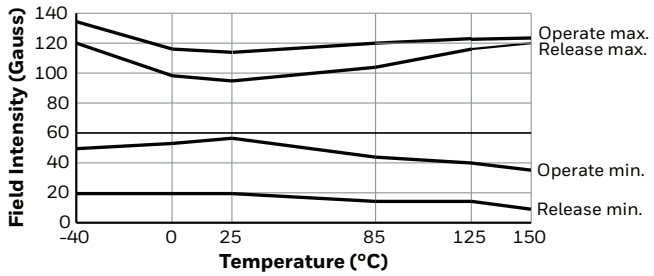

SS443/SS443AT

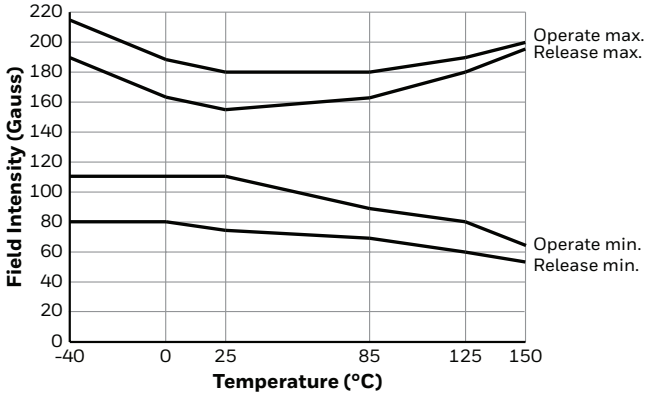

SS449/SS549AT

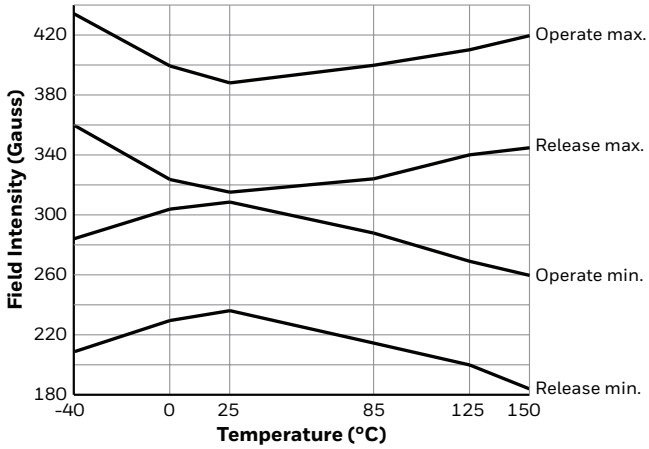

SS461/SS561AT

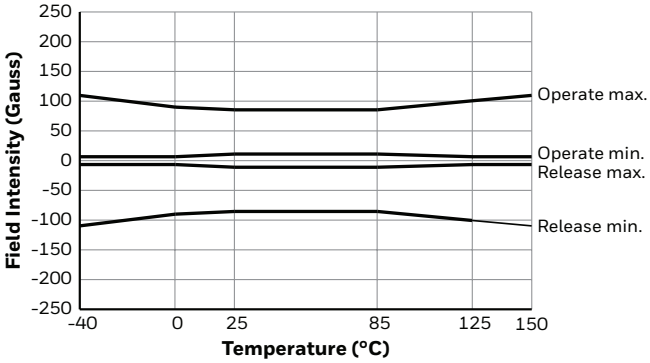

SS466/SS566AT

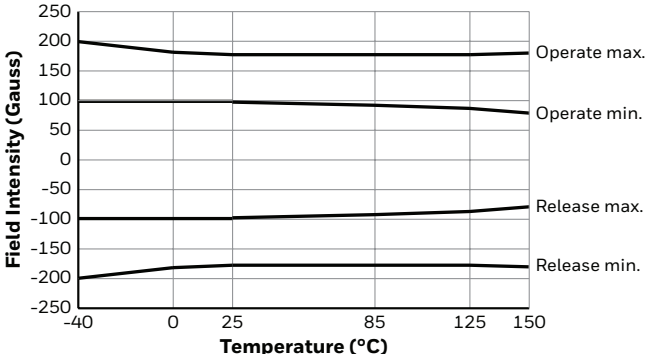

Figure 5. SS400 Series Flat TO-92-Style Mounting and Dimensional Drawings (For reference only: mm/[in].)

SS4XX: Straight Standard Leads, Bulk Pack

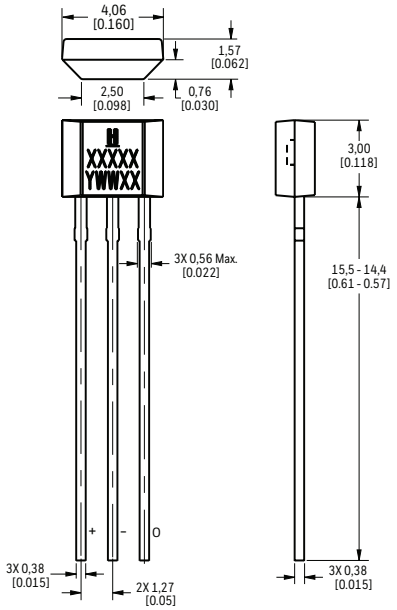

SS4XX-L: Straight Long Leads, Bulk Pack

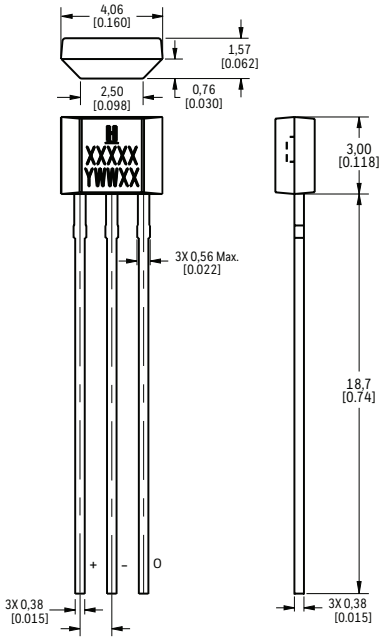

SS4XX-T2: Formed Leads, Ammopack Tape-in-Box

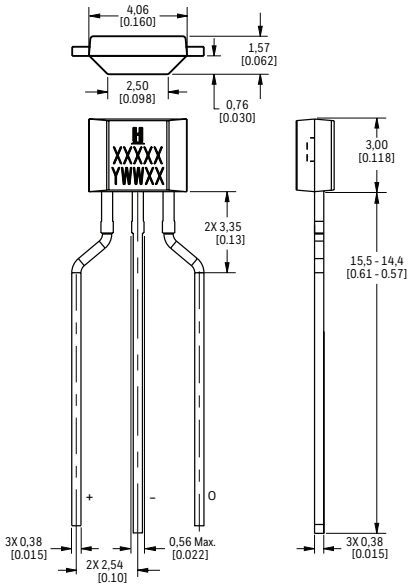

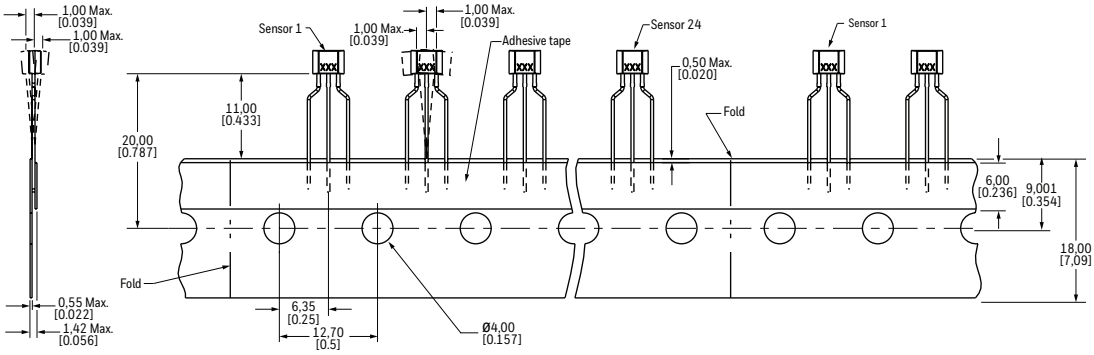

Figure 5. SS400 Series Flat TO-92-Style Mounting and Dimensional Drawings (For reference only: mm/[in].)

SS4XX-T3: Straight Standard Leads, Ammopack Tape-in-Box

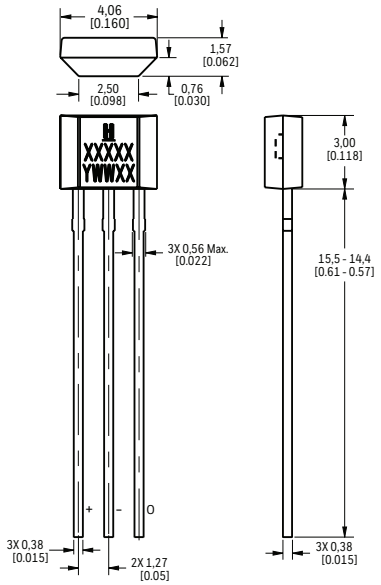

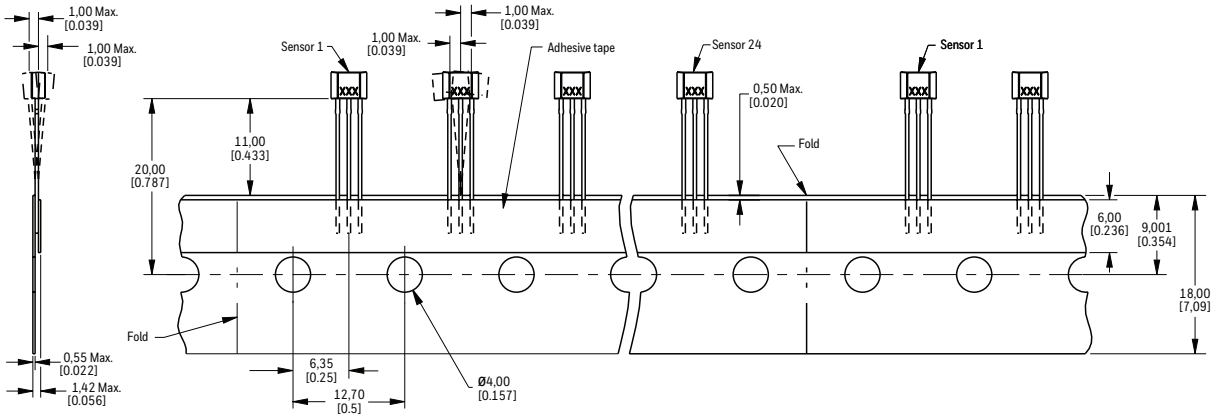

Figure 5. SS400 Series Flat TO-92-Style Mounting and Dimensional Drawings (continued)

SS4XX-S: Surface Mount, Bulk Pack

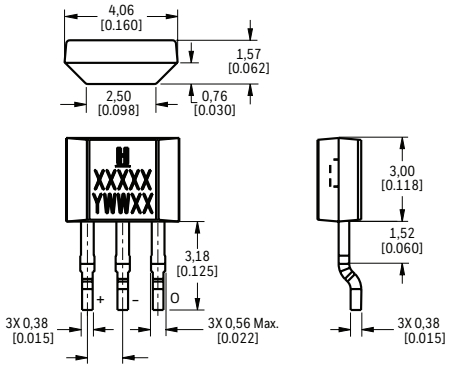

PCB Land Pattern

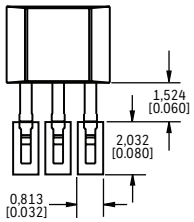

SS4XX-SP: Surface Mount, Pocket Tape and Reel

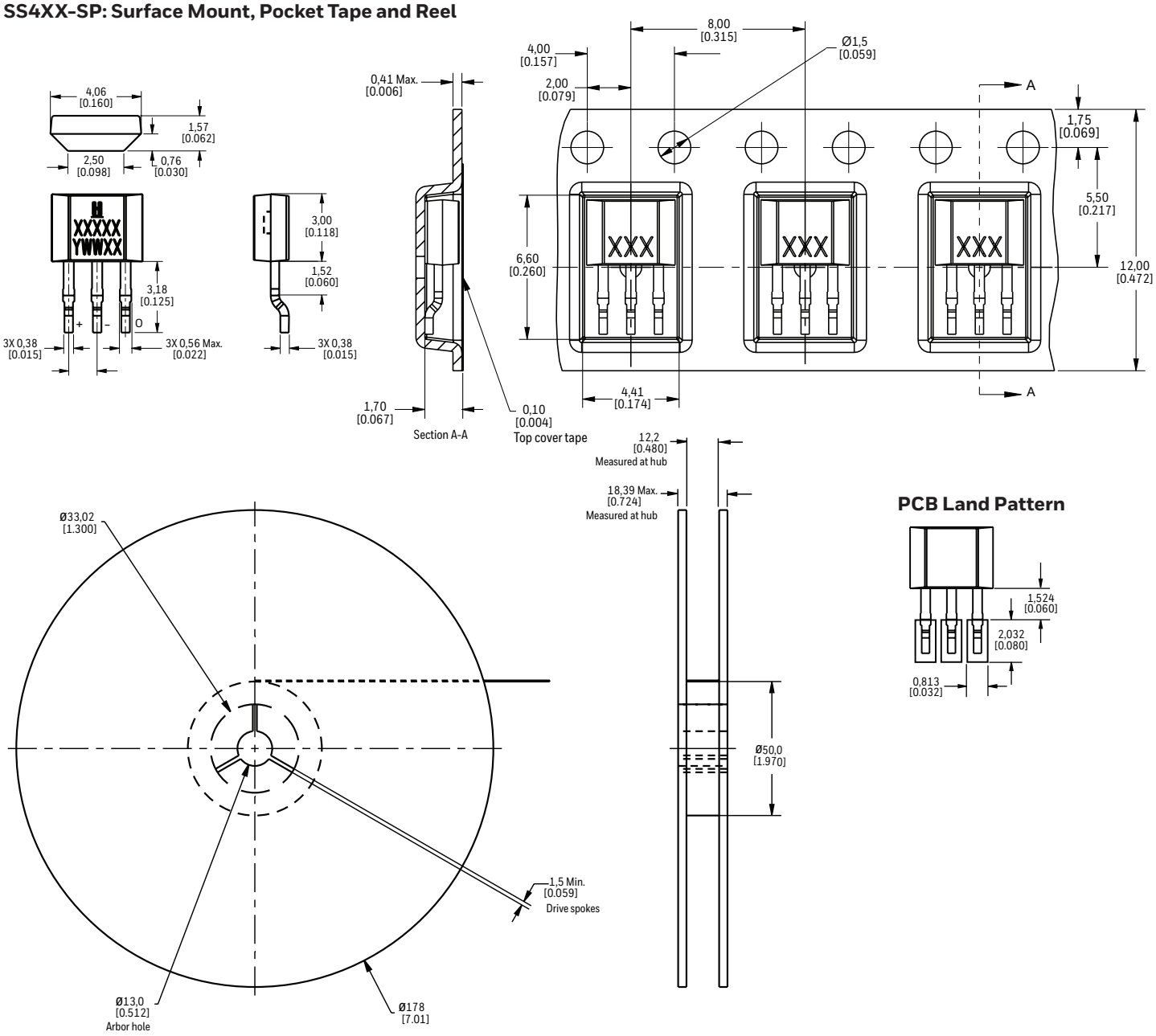

PCB Land Pattern

Figure 6. SS500 Series Mounting and Dimensional Drawings (For reference only: mm/[in].)

SOT-89B Sensor IC, Pocket Tape and Reel

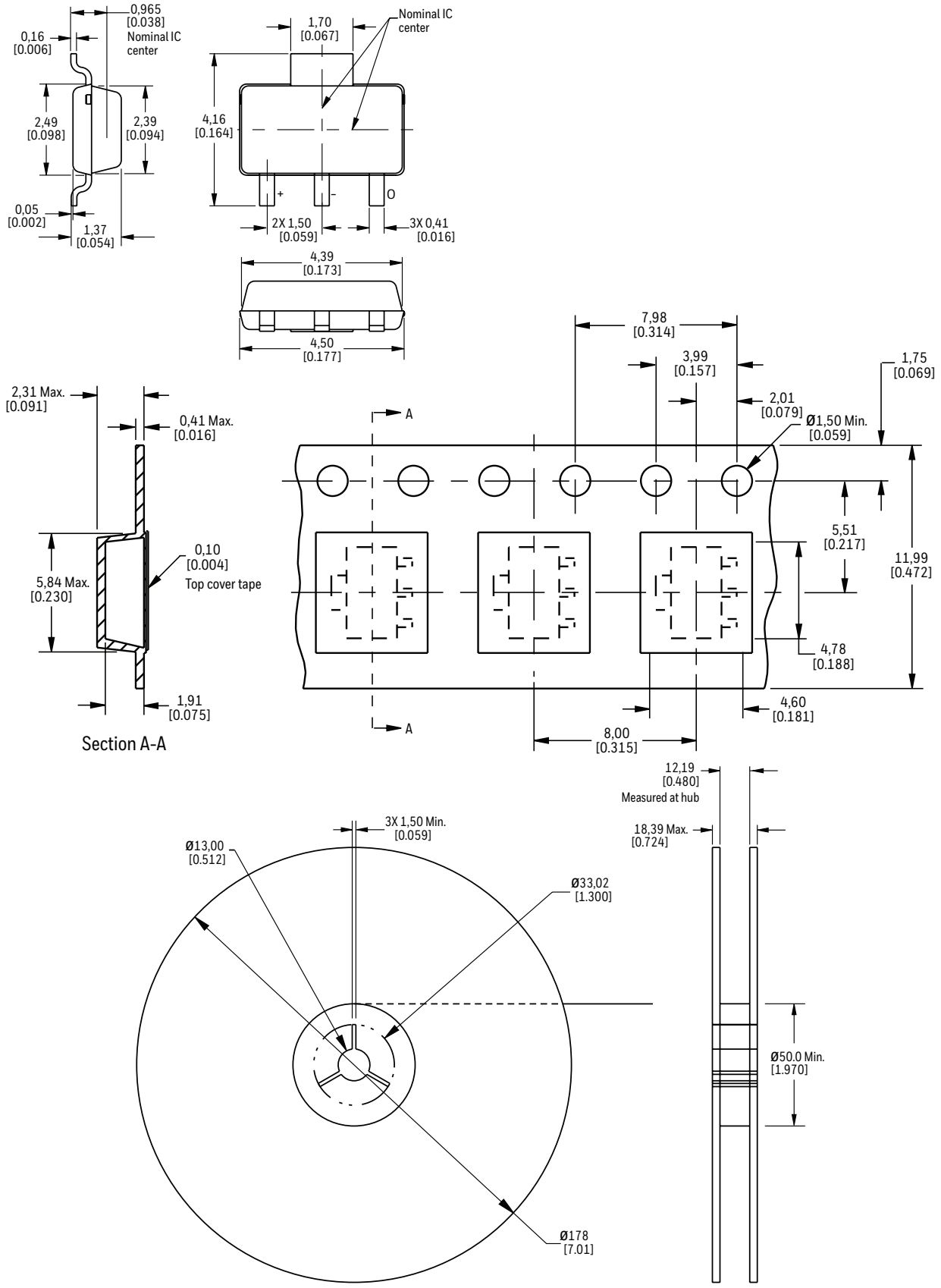

Bipolar, Latching, or Unipolar Hall-effect Digital Sensor ICs:

SS400 Series, SS500 Series

Table 4. Order Guide for the SS400 Series (Flat TO-92-Style)

Catalog Listing	Description
SS4XX: Straight standard leads, bulk pack, 1000 units/bag	
SS411A	Bipolar
SS413A	Bipolar
SS441A	Unipolar
SS443A	Unipolar
SS449A	Unipolar
SS461A	Latching
SS466A	Latching
SS4XX-L: Straight long leads, bulk pack, 1000 units/bag	
SS411A-L	Bipolar
SS413A-L	Bipolar
SS441A-L	Unipolar
SS443A-L	Unipolar
SS449A-L	Unipolar
SS461A-L	Latching
SS4XX-T2: Formed leads, ammopack tape-in-box, 5000 units/box	
SS413A-T2	Bipolar
SS441A-T2	Unipolar
SS443A-T2	Unipolar
SS449A-T2	Unipolar
SS461A-T2	Latching
SS4XX-T3: Straight standard leads, ammopack tape-in-box, 5000 units/box	
SS411A-T3	Bipolar
SS413A-T3	Bipolar
SS441A-T3	Unipolar
SS443A-T3	Unipolar
SS449A-T3	Unipolar
SS461A-T3	Latching
SS4XX-S: Surface mount, pocket tape and reel, bulk pack, 1000 units/bag	
SS411A-S	Bipolar
SS413A-S	Bipolar
SS441A-S	Unipolar
SS443A-S	Unipolar
SS449A-S	Unipolar
SS461A-S	Latching
SS4XX-SP: Surface mount, pocket tape and reel, 1000 units/reel	
SS411A-SP	Bipolar
SS413A-SP	Bipolar
SS441A-SP	Unipolar
SS443A-SP	Unipolar
SS449A-SP	Unipolar
SS461A-SP	Latching

SS4XX

SS4XX-L

SS4XX-T2

SS4XX-T3

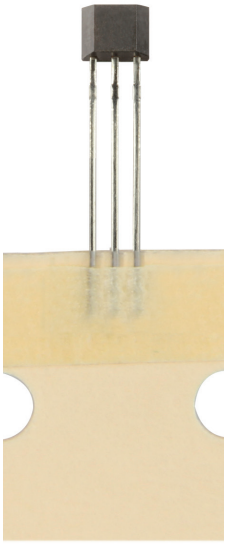

SS4XX-S

SS4XX-SP

Table 5. Order Guide for the SS500 Series (SOT-89B, Pocket Tape and Reel, 1000 Units/Reel)

Catalog Listing	Description
SS511AT	Bipolar
SS513AT	Bipolar
SS541AT	Unipolar
SS543AT	Unipolar
SS549AT	Unipolar
SS561AT	Latching
SS566AT	Latching

ADDITIONAL INFORMATION

The following associated literature is available on the Honeywell web site at sensing.honeywell.com:

- Product Line Guide
- Product Range Guide
- Selection Guides
- Application-specific Information

For more information

Honeywell Sensing and Internet of Things services its customers through a worldwide network of sales offices and distributors. For application assistance, current specifications, pricing or the nearest Authorized Distributor, visit sensing.honeywell.com or call:

Asia Pacific	+65 6355-2828
Europe	+44 (0) 1698 481481
USA/Canada	+1-800-537-6945

Honeywell Sensing and Productivity Solutions
9680 Old Bailes Road
Fort Mill, SC 29707
honeywell.com

⚠ WARNING
PERSONAL INJURY

DO NOT USE these products as safety or emergency stop devices or in any other application where failure of the product could result in personal injury.

Failure to comply with these instructions could result in death or serious injury.

⚠ WARNING
MISUSE OF DOCUMENTATION

- The information presented in this datasheet is for reference only. Do not use this document as a product installation guide.
- Complete installation, operation, and maintenance information is provided in the instructions supplied with each product.

Failure to comply with these instructions could result in death or serious injury.

Warranty/Remedy

Honeywell warrants goods of its manufacture as being free of defective materials and faulty workmanship during the applicable warranty period. Honeywell's standard product warranty applies unless agreed to otherwise by Honeywell in writing; please refer to your order acknowledgment or consult your local sales office for specific warranty details. If warranted goods are returned to Honeywell during the period of coverage, Honeywell will repair or replace, at its option, without charge those items that Honeywell, in its sole discretion, finds defective. **The foregoing is buyer's sole remedy and is in lieu of all other warranties, expressed or implied, including those of merchantability and fitness for a particular purpose. In no event shall Honeywell be liable for consequential, special, or indirect damages.**

While Honeywell may provide application assistance personally, through our literature and the Honeywell web site, it is buyer's sole responsibility to determine the suitability of the product in the application.Specifications may change without notice. The information we supply is believed to be accurate and reliable as of this writing. However, Honeywell assumes no responsibility for its use.

Honeywell

32320997-B-EN | B | 11/17
© 2017 Honeywell International Inc. All rights reserved.