Littelfuse®

Expertise Applied | Answers Delivered

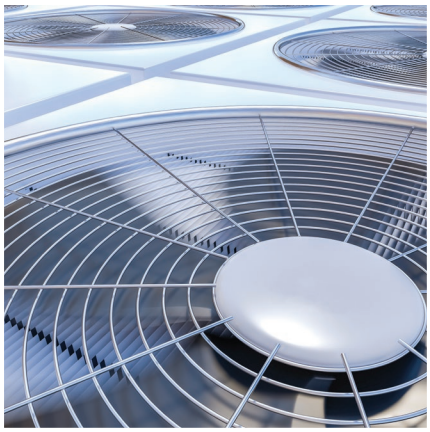

SURGE PROTECTION DEVICES CATALOG

SPD2 XP+0 SERIES **SPD2 XP+1 SERIES** **SPD2 PV SERIES**

SURGE PROTECTION DEVICES – TYPE 2
SPD2 SERIES

Littelfuse Type 2 Surge Protection Devices (SPDs) for branch circuits safeguard components from transient overvoltage or surges by limiting the fault current to a load or the unit being protected. Surges may be caused by an indirect lightning strike but, the majority—sixty to eighty percent*—are caused by equipment being turned on or off within a facility. These surges damage components costing money to repair or replace as well as create unplanned downtime resulting in unfulfilled orders, missed deadlines, unreliable systems and/or dangerous situations.

The DIN-rail mounted SPDs are available in a wide range of operating voltages and include solar applications. They are ideal for:

Power Distribution
- Load Centers
- Transformers
- Generators

HVAC or Medical Equipment

Industrial Controls
- Programmable Logic Controllers
- Motor Controls
- Variable-Frequency Drives
- Proximity Sensors
- Barcoding Equipment
- Machine Vision Systems

Electrical Loads
- Motors
- Fans
- Heaters
- Blowers
- Ballasts

Computers and Communications
- LANs
- WANs
- Intercoms
- Fire, Security, UPS or Building Management Systems

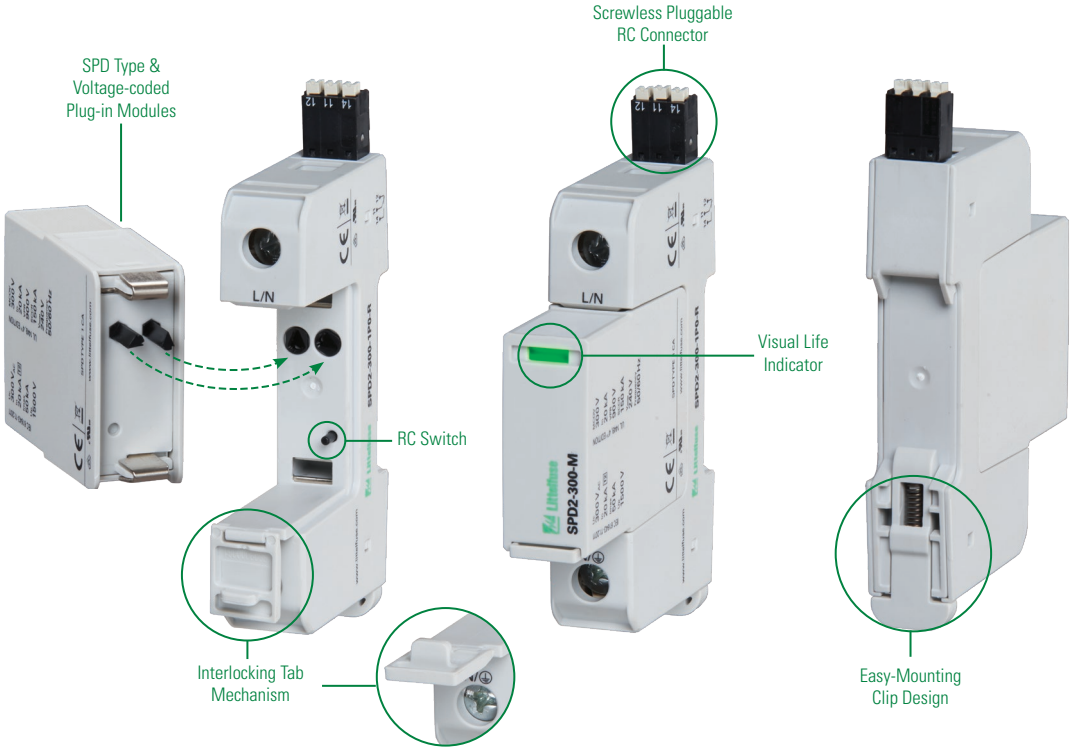

FEATURES	BENEFITS
Capability to clamp and withstand high-energy transients	Ensures low-residual voltage during high-energy surge events and higher nominal discharge current to prevent disruption, downtime, and degradation or damage to equipment
UL and VDE-IEC compliant in single part number	One component can be utilized globally, reducing inventory needs and simplifying allocation of parts
Interlocking tab mechanism	Secures module to withstand vibration
SPD type and voltage-coded plug-in module	Prevents specific SPD/voltage module from being plugged into wrong base. Eliminates risk of improper protection
No additional overcurrent protection devices required in UL applications	Reduces the number of components and costs required for protection
Compact footprint	Increases panel design flexibility
Visual life indicator	Quick visual determines module replacement status to avoid loss of protection
Pluggable modules	Fast and simple to replace, minimizing maintenance and downtime. No tools required
Thermal protection	Eliminates catastrophic failure
IP20 protection rating	Finger-safe design increases worker protection

*National Electrical Safety Month 2015, Electrical Safety Foundation International [website] Surge and Protect. Available: https://www.esfi.org/resource/surge-and-protect-413

Surge Protection Devices

TABLE OF CONTENTS

SPD2 XP+0 SERIES

SPD2 1P+0 2
SPD2 2P+0 4
SPD2 3P+0 6
SPD2 4P+0 8

SPD2 XP+1 SERIES

SPD2 1P+1 10
SPD2 3P+1 12

SPD2 PV SERIES

SPD2 PV 14

CROSS-REFERENCE GUIDE

SPD2 Series Cross Reference 16

© 2020 Littelfuse, Inc.

Class II/Type 2/Type 1 CA Pluggable Single-Pole

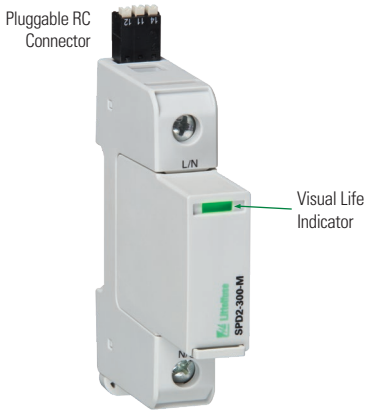

Internal Configuration

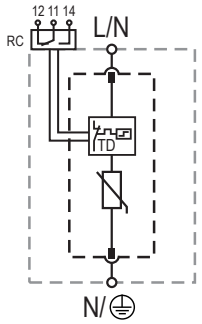

Legend

L *Line*

N *Neutral*

⏚ *Protective Earth*

RC *Remote Contacts*

TD *Thermal Disconnection*

Description

Surge protection devices (SPDs) provide equipment protection from transient overvoltage events lasting micro-seconds. By limiting the overvoltage to the equipment during these events, costly damage and downtime can be mitigated.

The surge protection devices for the 1+0 configuration are available for 60 V to 600 V nominal voltage sub-distribution board applications.

Features & Benefits

FEATURES	BENEFITS
Capability to clamp and withstand high-energy transients	Ensures low-residual voltage during high-energy surge events and higher nominal discharge current to prevent disruption, downtime, and degradation or damage to equipment
UL and VDE-IEC compliant in single part number	One component can be utilized globally, reducing inventory needs and simplifying allocation of parts
Interlocking tab mechanism	Secures module to withstand vibration
No additional overcurrent protection devices required in UL applications	Reduces the number of components and costs required for protection
Compact footprint	Increases panel design flexibility
Visual life indicator	Quick visual determines module replacement status to avoid loss of protection
Pluggable modules	Fast and simple to replace, minimizing maintenance and downtime. No tools required
Thermal protection	Eliminates catastrophic failure
IP20 protection rating	Finger-safe design increases worker protection

Module & Base Ordering Information

Ordering Number	IEC Electrical								UL Electrical				Single Unit Weight
	Nominal AC Voltage (50/60 Hz) (U_d/U_n)	Maximum Continuous Operating AC Voltage (U_c)	Nominal Discharge Current (8/20 µs) (I_n)	Maximum Discharge Current (8/20 µs) (I_{max})	Voltage Protection Level (U_p)	Short-Circuit AC Current Rating (I_{SCCR})	TOV Withstand 5 s (U_T)	TOV 120 min (U_T) / Mode	Maximum Continuous AC Operating Voltage (MCOV)	Voltage Protection Rating (VPR)	Nominal Discharge Current (8/20 µs) (I_n)	Short-Circuit Current Rating (SCCR)	
SPD2-075-1P0-R	60 V	75 V	20 kA	50 kA	800 V	25 kA / 50 kA	114 V	114 V / Withstand	75 V	330 V	20 kA	100 kA	124 g (0.274 lb)
SPD2-150-1P0-R	120 V	150 V	20 kA	50 kA	1250 V	25 kA / 50 kA	229 V	229 V / Withstand	150 V	600 V	20 kA	200 kA	128 g (0.283 lb)
SPD2-300-1P0-R	240 V	300 V	20 kA	50 kA	1500 V	25 kA / 50 kA	337 V	442 V / Safe Fail	300 V	900 V	20 kA	150 kA	135 g (0.298 lb)
SPD2-350-1P0-R	277 V	350 V	20 kA	50 kA	1750 V	25 kA / 50 kA	403 V	529 V / Safe Fail	350 V	1000 V	20 kA	200 kA	140 g (0.309 lb)
SPD2-480-1P0-R	400 V	480 V	20 kA	50 kA	2300 V	25 kA / 50 kA	581 V	762 V / Safe Fail	480 V	1500 V	20 kA	200 kA	145 g (0.320 lb)
SPD2-550-1P0-R*	480 V	550 V	20 kA	50 kA	2500 V	25 kA / 50 kA	697 V	915 V / Safe Fail	550 V	2000 V	20 kA	200 kA	148 g (0.326 lb)
SPD2-750-1P0-R	600 V	750 V	20 kA	35 kA	3400 V	25 kA / 50 kA	871 V	1143 V / Safe Fail	750 V	2500 V	20 kA	200 kA	161 g (0.355 lb)

© 2020 Littelfuse, Inc.

Module & Base Part Numbering System

SPD2 VVV XPZ R

- **Series** — SPD2
- **Maximum Continuous Operating AC Voltage** — VVV
- **Number of Poles** — X
- **Neutral** (1=yes or 0=no) — P
- **Module & Base** — R

Module Only Part Numbering System

SPD2 VVV M

- **Series** — SPD2
- **Maximum Continuous Operating AC Voltage** — VVV
- **Module Only** — M

Replacement Module Ordering Information

Ordering Number	IEC Electrical								UL Electrical				Single Unit Weight
	Nominal AC Voltage (50/60 Hz) (U_c/U_n)	Maximum Continuous Operating AC Voltage (U_c)	Nominal Discharge Current (8/20 µs) (I_n)	Maximum Discharge Current (8/20 µs) (I_{max})	Voltage Protection Level (U_p)	Short-Circuit AC Current Rating (I_{SCCR})	TOV Withstand 5 s (U_T)	TOV 120 min (U_T) / Mode	Maximum Continuous AC Operating Voltage (MCOV)	Voltage Protection Rating (VPR)	Nominal Discharge Current (8/20 µs) (I_n)	Short-Circuit Current Rating (SCCR)	
SPD2-075-M	60 V	75 V	20 kA	50 kA	800 V	25 kA / 50 kA	114 V	114 V / Withstand	75 V	330 V	20 kA	100 kA	50 g (0.111 lb)
SPD2-150-M	120 V	150 V	20 kA	50 kA	1250 V	25 kA / 50 kA	229 V	229 V / Withstand	150 V	600 V	20 kA	200 kA	54 g (0.120 lb)
SPD2-300-M	240 V	300 V	20 kA	50 kA	1500 V	25 kA / 50 kA	337 V	442 V / Safe Fail	300 V	900 V	20 kA	150 kA	61 g (0.135 lb)
SPD2-350-M	277 V	350 V	20 kA	50 kA	1750 V	25 kA / 50 kA	403 V	529 V / Safe Fail	350 V	1000 V	20 kA	200 kA	66 g (0.146 lb)
SPD2-480-M	400 V	480 V	20 kA	50 kA	2300 V	25 kA / 50 kA	581 V	762 V / Safe Fail	480 V	1500 V	20 kA	200 kA	71 g (0.157 lb)
SPD2-550-M*	480 V	550 V	20 kA	50 kA	2500 V	25 kA / 50 kA	697 V	915 V / Safe Fail	550 V	2000 V	20 kA	200 kA	74 g (0.163 lb)
SPD2-750-M	600 V	750 V	20 kA	35 kA	3400 V	25 kA / 50 kA	871 V	1143 V / Safe Fail	750 V	2500 V	20 kA	200 kA	87 g (0.192 lb)

Specifications

Network Systems TN-S, TN-C, TT (only L-N)
Mode of Protection L-PE, N-PE (only TN-S), L-PEN, L-N
Nominal Discharge Current (8/20 µs) (I_n) 20 kA
Maximum Discharge Current (8/20 µs) (I_{max}) Up to 50 kA
Protective Elements High Energy MOV
Response Time (L-N / N-PE t_A) < 25 ns
Back-Up Fuse (max) 315 A/250 A Gg
Number of Ports 1

Mechanical & Environmental

Operating Temperature Range (T_a) -40 °C to +80 °C (-40 °F to +185 °F)
Permissible Operating Humidity (RH) 5% to 95%
Altitude (max) 4,000 m (13,123 ft)
Terminal Screw Torque) (M_{max}) 4.5 Nm (39.9 lbf-in)
Conductor Cross Section (max) 35 mm² (2 AWG) (Solid, Stranded)/ 25 mm² (4 AWG) (Flexible)
Mounting 35 mm DIN Rail, EN60715
Degree of Protection IP20 (built-in)
Housing Material Thermoplastic: Extinguishing Degree UL 94 V-0
Thermal Protection Yes
Operating State/Fault Indication Green Flag/No Green Flag
Remote Contact Switching Capacity AC: 250 V/1 A, 125 V/1 A; DC: 48 V/0.5 A, 24 V/0.5 A, 12 V/0.5 A
Remote Contact Conductor Cross Section (max) 1.5 mm² (16 AWG) (Solid)
Standards Passed* IEC 61643-11:2011
EN 61643-11:2012
UL 1449, 4th edition

Product Dimensions

1TE Module and Base **H** 90.0 mm (3.54"); **W** 18.0 mm (0.71"); **D** 70.0 mm (2.76")
1TE Replacement Module **H** 45.0 mm (1.77"); **W** 18.0 mm (0.71"); **D** 57.2mm (2.25")

Package Dimensions

1TE Module and Base **H** 102.0 mm (4.01"); **W** 28.0 mm (1.10"); **D** 110.0 mm (4.33")
1TE Replacement Module **H** 102.0 mm (4.01"); **W** 28.0 mm (1.10"); **D** 110.0 mm (4.33")

*SPD2-550-1P0-R and SPD2-550-M are UL Listed only

Warranty – Visit **www.littelfuse.com/warranty** for details.

© 2020 Littelfuse, Inc.

Class II/Type 2/Type 1 CA Pluggable Multi-Pole

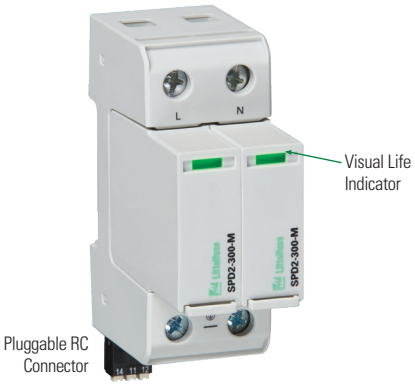

Internal Configuration

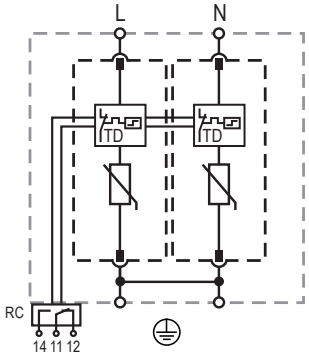

Legend

L *Line*
N *Neutral*
⏚ *Protective Earth*
RC *Remote Contacts*
TD *Thermal Disconnection*

Description

Surge protection devices (SPDs) provide equipment protection from transient overvoltage events lasting micro-seconds. By limiting the overvoltage to the equipment during these events, costly damage and downtime can be mitigated.

The surge protection devices for the 2+0 configuration are available for 120 V to 600 V nominal voltage sub-distribution board applications.

Features & Benefits

FEATURES	BENEFITS
Capability to clamp and withstand high-energy transients	Ensures low-residual voltage during high-energy surge events and higher nominal discharge current to prevent disruption, downtime, and degradation or damage to equipment
UL and VDE-IEC compliant in single part number	One component can be utilized globally, reducing inventory needs and simplifying allocation of parts
Interlocking tab mechanism	Secures module to withstand vibration
No additional overcurrent protection devices required in UL applications	Reduces the number of components and costs required for protection
Compact footprint	Increases panel design flexibility
Visual life indicator	Quick visual determines module replacement status to avoid loss of protection
Pluggable modules	Fast and simple to replace, minimizing maintenance and downtime. No tools required
Thermal protection	Eliminates catastrophic failure
IP20 protection rating	Finger-safe design increases worker protection

Module & Base Ordering Information

Ordering Number	IEC Electrical								UL Electrical				Single Unit Weight
	Nominal AC Voltage (50/60Hz) (U_o/U_n)	Maximum Continuous Operating AC Voltage (U_c)	Nominal Discharge Current (8/20 µs) (I_n)	Maximum Discharge Current (8/20 µs) (I_{max})	Voltage Protection Level (U_p)	Short-Circuit AC Current Rating (I_{SCCR})	TOV Withstand 5 s (U_T)	TOV 120 min (U_T) / Mode	Maximum Continuous AC Operating Voltage (MCOV)	Voltage Protection Rating (VPR)	Nominal Discharge Current (8/20 µs) (I_n)	Short-Circuit Current Rating (SCCR)	
SPD2-150-2P0-R	120 V	150 V	20 kA	50 kA	1250 V	25 kA / 50 kA	229 V	229 V / Withstand	150 V	600 V	20 kA	200 kA	252 g (0.556 lb)
SPD2-300-2P0-R	240 V	300 V	20 kA	50 kA	1500 V	25 kA / 50 kA	337 V	442 V / Safe Fail	300 V	900 V	20 kA	150 kA	266 g (0.587 lb)
SPD2-350-2P0-R	277 V	350 V	20 kA	50 kA	1750 V	25 kA / 50 kA	403 V	529 V / Safe Fail	350 V	1000 V	20 kA	200 kA	276 g (0.609 lb)
SPD2-480-2P0-R	400 V	480 V	20 kA	50 kA	2300 V	25 kA / 50 kA	581 V	762 V / Safe Fail	480 V	1500 V	20 kA	200 kA	286 g (0.631 lb)
SPD2-550-2P0-R*	480 V	550 V	20 kA	50 kA	2500 V	25 kA / 50 kA	697 V	915 V / Safe Fail	550 V	2000 V	20 kA	200 kA	290 g (0.639 lb)
SPD2-750-2P0-R	600 V	750 V	20 kA	35 kA	3400 V	25 kA / 50 kA	871 V	1143 V / Safe Fail	750 V	2500 V	20 kA	200 kA	318 g (0.702 lb)

© 2020 Littelfuse, Inc.

Module & Base Part Numbering System

SPD2 VVV XPZ R

- **Series** — SPD2
- **Maximum Continuous Operating AC Voltage** — VVV
- **Number of Poles** — X
- **Neutral** (1=yes or 0=no) — Z
- **Module & Base** — R

Module Only Part Numbering System

SPD2 VVV M

- **Series** — SPD2
- **Maximum Continuous Operating AC Voltage** — VVV
- **Module Only** — M

Replacement Module Ordering Information

Ordering Number	IEC Electrical								UL Electrical				Single Unit Weight
	Nominal AC Voltage (50/60Hz) (U_c/U_n)	Maximum Continuous Operating AC Voltage (U_c)	Nominal Discharge Current (8/20 µs) (I_n)	Maximum Discharge Current (8/20 µs) (I_{max})	Voltage Protection Level (U_p)	Short-Circuit AC Current Rating (I_{SCCR})	TOV Withstand 5 s (U_T)	TOV 120 min (U_T) / Mode	Maximum Continuous AC Operating Voltage (MCOV)	Voltage Protection Rating (VPR)	Nominal Discharge Current (8/20 µs) (I_n)	Short-Circuit Current Rating (SCCR)	
SPD2-150-M	120 V	150 V	20 kA	50 kA	1250 V	25 kA / 50 kA	229 V	229 V / Withstand	150 V	600 V	20 kA	200 kA	54 g (0.120 lb)
SPD2-300-M	240 V	300 V	20 kA	50 kA	1500 V	25 kA / 50 kA	337 V	442 V / Safe Fail	300 V	900 V	20 kA	150 kA	61 g (0.135 lb)
SPD2-350-M	277 V	350 V	20 kA	50 kA	1750 V	25 kA / 50 kA	403 V	529 V / Safe Fail	350 V	1000 V	20 kA	200 kA	66 g (0.146 lb)
SPD2-480-M	400 V	480 V	20 kA	50 kA	2300 V	25 kA / 50 kA	581 V	762 V / Safe Fail	480 V	1500 V	20 kA	200 kA	71 g (0.157 lb)
SPD2-550-M*	480 V	550 V	20 kA	50 kA	2500 V	25 kA / 50 kA	697 V	915 V / Safe Fail	550 V	2000 V	20 kA	200 kA	74 g (0.163 lb)
SPD2-750-M	600 V	750 V	20 kA	35 kA	3400 V	25 kA / 50 kA	871 V	1143 V / Safe Fail	750 V	2500 V	20 kA	200 kA	87 g (0.192 lb)

Specifications

Network Systems TN-S
Mode of Protection L-PE, N-PE
Nominal Discharge Current (8/20 µs) (I_n) 20 kA
Maximum Discharge Current (8/20 µs) (I_{max}) Up to 50 kA
Protective Elements High Energy MOV
Response Time (t_A) < 25 ns
Back-Up Fuse (max) 315 A/250 A Gg
Number of Ports 1

Mechanical & Environmental

Operating Temperature Range (T_a) -40 °C to +80 °C (-40 °F to +185 °F)
Permissible Operating Humidity (RH) 5% to 95%
Altitude (max) 4,000 m (13,123 ft)
Terminal Screw Torque) (M_{max}) 4.5 Nm (39.9 lbf-in)
Conductor Cross Section (max) 35 mm² (2 AWG) (Solid, Stranded)/ 25 mm² (4 AWG) (Flexible)
Mounting 35 mm DIN Rail, EN60715
Degree of Protection IP20 (built-in)
Housing Material Thermoplastic: Extinguishing Degree UL 94 V-0
Thermal Protection Yes
Operating State/Fault Indication Green Flag/No Green Flag
Remote Contact Switching Capacity AC: 250 V/1 A, 125 V/1 A; DC: 48 V/0.5 A, 24 V/0.5 A, 12 V/0.5 A
Remote Contact Conductor Cross Section (max) 1.5 mm² (16 AWG) (Solid)
Standards Passed* IEC 61643-11:2011
EN 61643-11:2012
UL 1449, 4th edition

Dimensions & Packaging

2TE Module and Base **H** 90.0 mm (3.54"); **W** 36.0 mm (1.42"); **D** 70.0 mm (2.76")
1TE Replacement Module **H** 45.0 mm (1.77"); **W** 18.0 mm (0.71"); **D** 57.2mm (2.25")

Package Dimensions

2TE Module and Base **H** 102.0 mm (4.01"); **W** 46.0 mm (1.81"); **D** 110.0 mm (4.33")
1TE Replacement Module **H** 102.0 mm (4.01"); **W** 28.0 mm (1.10"); **D** 110.0 mm (4.33")

*SPD2-550-2P0-R and SPD2-550-M are UL Listed only

Warranty – Visit **www.littelfuse.com/warranty** for details.

© 2020 Littelfuse, Inc.

Class II/Type 2/Type 1 CA Pluggable Multi-Pole

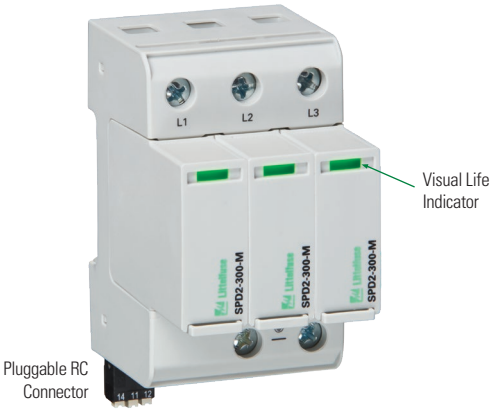

Internal Configuration

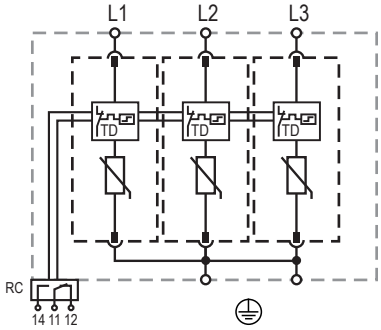

Legend

L *Line*
N *Neutral*
⏚ *Protective Earth*
RC *Remote Contacts*
TD *Thermal Disconnection*

Description

Surge protection devices (SPDs) provide equipment protection from transient overvoltage events lasting micro-seconds. By limiting the overvoltage to the equipment during these events, costly damage and downtime can be mitigated.

The surge protection devices for the 3+0 configuration are available for 120 V to 600 V nominal voltage sub-distribution board applications.

Features & Benefits

FEATURES	BENEFITS
Capability to clamp and withstand high-energy transients	Ensures low-residual voltage during high-energy surge events and higher nominal discharge current to prevent disruption, downtime, and degradation or damage to equipment
UL and VDE-IEC compliant in single part number	One component can be utilized globally, reducing inventory needs and simplifying allocation of parts
Interlocking tab mechanism	Secures module to withstand vibration
No additional overcurrent protection devices required in UL applications	Reduces the number of components and costs required for protection
Compact footprint	Increases panel design flexibility
Visual life indicator	Quick visual determines module replacement status to avoid loss of protection
Pluggable modules	Fast and simple to replace, minimizing maintenance and downtime. No tools required
Thermal protection	Eliminates catastrophic failure
IP20 protection rating	Finger-safe design increases worker protection

Module & Base Ordering Information

Ordering Number	IEC Electrical								UL Electrical				Single Unit Weight
	Nominal AC Voltage (50/60Hz) (U_o/U_n)	Maximum Continuous Operating AC Voltage (U_c)	Nominal Discharge Current (8/20 µs) (I_n)	Maximum Discharge Current (8/20 µs) (I_{max})	Voltage Protection Level (U_p)	Short-Circuit AC Current Rating (I_{SCCR})	TOV Withstand 5 s (U_T)	TOV 120 min (U_T) / Mode	Maximum Continuous AC Operating Voltage (MCOV)	Voltage Protection Rating (VPR)	Nominal Discharge Current (8/20 µs) (I_n)	Short-Circuit Current Rating (SCCR)	
SPD2-150-3P0-R	120 V	150 V	20 kA	50 kA	1250 V	25 kA / 50 kA	229 V	229 V / Withstand	150 V	600 V	20 kA	200 kA	355 g (0.783 lb)
SPD2-300-3P0-R	240 V	300 V	20 kA	50 kA	1500 V	25 kA / 50 kA	337 V	442 V / Safe Fail	300 V	900 V	20 kA	150 kA	376 g (0.829 lb)
SPD2-350-3P0-R	277 V	350 V	20 kA	50 kA	1750 V	25 kA / 50 kA	403 V	529 V / Safe Fail	350 V	1000 V	20 kA	200 kA	391 g (0.862 lb)
SPD2-480-3P0-R	400 V	480 V	20 kA	50 kA	2300 V	25 kA / 50 kA	581 V	762 V / Safe Fail	480 V	1500 V	20 kA	200 kA	406 g (0.896 lb)
SPD2-550-3P0-R*	480 V	550 V	20 kA	50 kA	2500 V	25 kA / 50 kA	697 V	915 V / Safe Fail	550 V	2000 V	20 kA	200 kA	414 g (0.913 lb)
SPD2-750-3P0-R	600 V	750 V	20 kA	35 kA	3400 V	25 kA / 50 kA	871 V	1143 V / Safe Fail	750 V	2500 V	20 kA	200 kA	454 g (1.001 lb)

© 2020 Littelfuse, Inc.

Module & Base Part Numbering System

SPD2 VVV XPZ R

- **Series** — SPD2
- **Maximum Continuous Operating AC Voltage** — VVV
- **Number of Poles** — X
- **Neutral** (1=yes or 0=no) — P
- **Module & Base** — R

Module Only Part Numbering System

SPD2 VVV M

- **Series** — SPD2
- **Maximum Continuous Operating AC Voltage** — VVV
- **Module Only** — M

Replacement Module Ordering Information

Ordering Number	IEC Electrical								UL Electrical				Single Unit Weight
	Nominal AC Voltage (50/60Hz) (U_c/U_n)	Maximum Continuous Operating AC Voltage (U_c)	Nominal Discharge Current (8/20 µs) (I_n)	Maximum Discharge Current (8/20 µs) (I_{max})	Voltage Protection Level (U_p)	Short-Circuit AC Current Rating (I_{SCCR})	TOV Withstand 5 s (U_T)	TOV 120 min (U_T) / Mode	Maximum Continuous AC Operating Voltage (MCOV)	Voltage Protection Rating (VPR)	Nominal Discharge Current (8/20 µs) (I_n)	Short-Circuit Current Rating (SCCR)	
SPD2-150-M	120 V	150 V	20 kA	50 kA	1250 V	25 kA / 50 kA	229 V	229 V / Withstand	150 V	600 V	20 kA	200 kA	54 g (0.120 lb)
SPD2-300-M	240 V	300 V	20 kA	50 kA	1500 V	25 kA / 50 kA	337 V	442 V / Safe Fail	300 V	900 V	20 kA	150 kA	61 g (0.135 lb)
SPD2-350-M	277 V	350 V	20 kA	50 kA	1750 V	25 kA / 50 kA	403 V	529 V / Safe Fail	350 V	1000 V	20 kA	200 kA	66 g (0.146 lb)
SPD2-480-M	400 V	480 V	20 kA	50 kA	2300 V	25 kA / 50 kA	581 V	762 V / Safe Fail	480 V	1500 V	20 kA	200 kA	71 g (0.157 lb)
SPD2-550-M*	480 V	550 V	20 kA	50 kA	2500 V	25 kA / 50 kA	697 V	915 V / Safe Fail	550 V	2000 V	20 kA	200 kA	74 g (0.163 lb)
SPD2-750-M	600 V	750 V	20 kA	35 kA	3400 V	25 kA / 50 kA	871 V	1143 V / Safe Fail	750 V	2500 V	20 kA	200 kA	87 g (0.192 lb)

Specifications

Network Systems TT, TN-S
Mode of Protection L-N, N-PE
Nominal Discharge Current (8/20 µs) (I_n) 20 kA
Maximum Discharge Current (8/20 µs) (I_{max}) Up to 50 kA
Protective Elements High Energy MOV
Response Time (L-N / N-PE t_A) < 25 ns
Back-Up Fuse (max) 315 A/250 A Gg
Number of Ports 1

Mechanical & Environmental

Operating Temperature Range (T_a) -40 °C to +80 °C (-40 °F to +185 °F)
Permissible Operating Humidity (RH) 5% to 95%
Altitude (max) 4,000 m (13,123 ft)
Terminal Screw Torque) (M_{max}) 4.5 Nm (39.9 lbf-in)
Conductor Cross Section (max) 35 mm² (2 AWG) (Solid, Stranded)/ 25 mm² (4 AWG) (Flexible)
Mounting 35 mm DIN Rail, EN60715
Degree of Protection IP20 (built-in)
Housing Material Thermoplastic: Extinguishing Degree UL 94 V-0
Thermal Protection Yes
Operating State/Fault Indication Green Flag/No Green Flag
Remote Contact Switching Capacity AC: 250 V/1 A, 125 V/1 A; DC: 48 V/0.5 A, 24 V/0.5 A, 12 V/0.5 A
Remote Contact Conductor Cross Section (max) 1.5 mm² (16 AWG) (Solid)
Standards Passed* IEC 61643-11:2011
EN 61643-11:2012
UL 1449, 4th edition

Product Dimensions

3TE Module and Base **H** 90.0 mm (3.54"); **W** 54.0 mm (2.13"); **D** 70.0 mm (2.76")
1TE Replacement Module **H** 45.0 mm (1.77"); **W** 18.0 mm (0.71"); **D** 57.2mm (2.25")

Package Dimensions

3TE Module and Base **H** 102.0 mm (4.01"); **W** 64.0 mm (2.52"); **D** 110.0 mm (4.33")
1TE Replacement Module **H** 102.0 mm (4.01"); **W** 28.0 mm (1.10"); **D** 110.0 mm (4.33")

*SPD2-550-3P0-R and SPD2-550-M are UL Listed only

Warranty – Visit **www.littelfuse.com/warranty** for details.

© 2020 Littelfuse, Inc.

Class II/Type 2/Type 1 CA Pluggable Multi-Pole

Internal Configuration

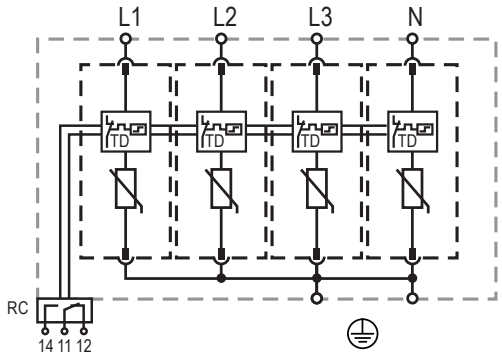

Legend

L *Line*
N *Neutral*
⏚ *Protective Earth*
RC *Remote Contacts*
TD *Thermal Disconnection*

Description

Surge protection devices (SPDs) provide equipment protection from transient overvoltage events lasting micro-seconds. By limiting the overvoltage to the equipment during these events, costly damage and downtime can be mitigated.

The surge protection devices for the 4+0 configuration are available for 120 V to 480 V nominal voltage sub-distribution board applications.

Features & Benefits

FEATURES	BENEFITS
Capability to clamp and withstand high-energy transients	Ensures low-residual voltage during high-energy surge events and higher nominal discharge current to prevent disruption, downtime, and degradation or damage to equipment
UL and VDE-IEC compliant in single part number	One component can be utilized globally, reducing inventory needs and simplifying allocation of parts
Interlocking tab mechanism	Secures module to withstand vibration
No additional overcurrent protection devices required in UL applications	Reduces the number of components and costs required for protection
Compact footprint	Increases panel design flexibility
Visual life indicator	Quick visual determines module replacement status to avoid loss of protection
Pluggable modules	Fast and simple to replace, minimizing maintenance and downtime. No tools required
Thermal protection	Eliminates catastrophic failure
IP20 protection rating	Finger-safe design increases worker protection

Module & Base Ordering Information

Ordering Number	IEC Electrical								UL Electrical				Single Unit Weight
	Nominal AC Voltage (50/60Hz) (U_c/U_n)	Maximum Continuous Operating AC Voltage (U_c)	Nominal Discharge Current (8/20 µs) (I_n)	Maximum Discharge Current (8/20 µs) (I_{max})	Voltage Protection Level (U_p)	Short-Circuit AC Current Rating (I_{SCCR})	TOV Withstand 5 s (U_T)	TOV 120 min (U_T) / Mode	Maximum Continuous AC Operating Voltage (MCOV)	Voltage Protection Rating (VPR)	Nominal Discharge Current (8/20 µs) (I_n)	Short-Circuit Current Rating (SCCR)	
SPD2-150-4P0-R	120 V	150 V	20 kA	50 kA	1250 V	25 kA / 50 kA	229 V	229 V / Withstand	150 V	600 V	20 kA	200 kA	477 g (1.052 lb)
SPD2-300-4P0-R	240 V	300 V	20 kA	50 kA	1500 V	25 kA / 50 kA	337 V	442 V / Safe Fail	300 V	900 V	20 kA	150 kA	505 g (1.114 lb)
SPD2-350-4P0-R	277 V	350 V	20 kA	50 kA	1750 V	25 kA / 50 kA	403 V	529 V / Safe Fail	350 V	1000 V	20 kA	200 kA	525 g (1.158 lb)
SPD2-480-4P0-R	400 V	480 V	20 kA	50 kA	2300 V	25 kA / 50 kA	581 V	762 V / Safe Fail	480 V	1500 V	20 kA	200 kA	545 g (1.202 lb)
SPD2-550-4P0-R*	480 V	550 V	20 kA	50 kA	2500 V	25 kA / 50 kA	697 V	915 V / Safe Fail	550 V	2000 V	20 kA	200 kA	557 g (1.228 lb)

© 2020 Littelfuse, Inc.

Module & Base Part Numbering System

SPD2 VVV XPZ R

- **Series** — SPD2
- **Maximum Continuous Operating AC Voltage** — VVV
- **Number of Poles** — X
- **Neutral** (1=yes or 0=no) — P
- **Module & Base** — R

Module Only Part Numbering System

SPD2 VVV M

- **Series** — SPD2
- **Maximum Continuous Operating AC Voltage** — VVV
- **Module Only** — M

Replacement Module Ordering Information

Ordering Number	IEC Electrical								UL Electrical				Single Unit Weight
	Nominal AC Voltage (50/60Hz) (U_d/U_n)	Maximum Continuous Operating AC Voltage (U_c)	Nominal Discharge Current (8/20 µs) (I_n)	Maximum Discharge Current (8/20 µs) (I_{max})	Voltage Protection Level (U_p)	Short-Circuit AC Current Rating (I_{SCCR})	TOV Withstand 5 s (U_T)	TOV 120 min (U_T) / Mode	Maximum Continuous AC Operating Voltage (MCOV)	Voltage Protection Rating (VPR)	Nominal Discharge Current (8/20 µs) (I_n)	Short-Circuit Current Rating (SCCR)	
SPD2-150-M	120 V	150 V	20 kA	50 kA	1250 V	25 kA / 50 kA	229 V	229 V / Withstand	150 V	600 V	20 kA	200 kA	54 g (0.120 lb)
SPD2-300-M	240 V	300 V	20 kA	50 kA	1500 V	25 kA / 50 kA	337 V	442 V / Safe Fail	300 V	900 V	20 kA	150 kA	61 g (0.135 lb)
SPD2-350-M	277 V	350 V	20 kA	50 kA	1750 V	25 kA / 50 kA	403 V	529 V / Safe Fail	350 V	1000 V	20 kA	200 kA	66 g (0.146 lb)
SPD2-480-M	400 V	480 V	20 kA	50 kA	2300 V	25 kA / 50 kA	581 V	762 V / Safe Fail	480 V	1500 V	20 kA	200 kA	71 g (0.157 lb)
SPD2-550-M*	480 V	550 V	20 kA	50 kA	2500 V	25 kA / 50 kA	697 V	915 V / Safe Fail	550 V	2000 V	20 kA	200 kA	74 g (0.163 lb)

Specifications

Network Systems TN-S
Mode of Protection L-PE, N-PE
Nominal Discharge Current (8/20 µs) (I_n) 20 kA
Maximum Discharge Current (8/20 µs) (I_{max}) Up to 50 kA
Protective Elements High Energy MOV
Response Time (t_A) < 25 ns
Back-Up Fuse (max) 315 A/250 A Gg
Number of Ports 1

Mechanical & Environmental

Operating Temperature Range (T_a) -40 °C to +80 °C (-40 °F to +185 °F)
Permissible Operating Humidity (RH) 5% to 95%
Altitude (max) 4,000 m (13,123 ft)
Terminal Screw Torque (M_{max}) 4.5 Nm (39.9 lbf-in)
Conductor Cross Section (max) 35 mm² (2 AWG) (Solid, Stranded)/ 25 mm² (4 AWG) (Flexible)
Mounting 35 mm DIN Rail, EN60715
Degree of Protection IP20 (built-in)
Housing Material Thermoplastic: Extinguishing Degree UL 94 V-0
Thermal Protection Yes
Operating State/Fault Indication Green Flag/No Green Flag
Remote Contact Switching Capacity AC: 250 V/1 A, 125 V/1 A; DC: 48 V/0.5 A, 24 V/0.5 A, 12 V/0.5 A
Remote Contact Conductor Cross Section (max) 1.5 mm² (16 AWG) (Solid)
Standards Passed* IEC 61643-11:2011, EN 61643-11:2012, UL 1449, 4th edition

Product Dimensions

4TE Module and Base **H** 90.0 mm (3.54"); **W** 72.0 mm (2.84"); **D** 70.0 mm (2.76")
1TE Replacement Module **H** 45.0 mm (1.77"); **W** 18.0 mm (0.71"); **D** 57.2mm (2.25")

Package Dimensions

4TE Module and Base **H** 102.0 mm (4.01"); **W** 82.0 mm (3.23"); **D** 110.0 mm (4.33")
1TE Replacement Module **H** 102.0 mm (4.01"); **W** 28.0 mm (1.10"); **D** 110.0 mm (4.33")

*SPD2-550-4P0-R and SPD2-550-M are UL Listed only

Warranty – Visit **www.littelfuse.com/warranty** for details.

© 2020 Littelfuse, Inc.

Class II/Type 2/Type 1 CA Pluggable Multi-Pole

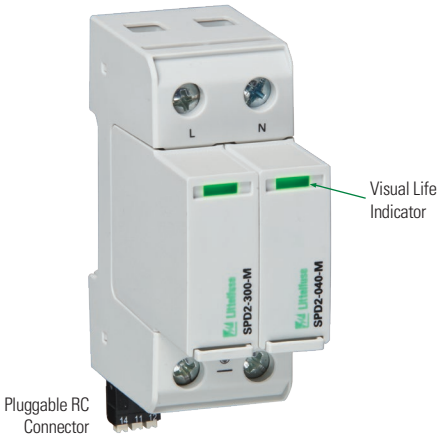

Internal Configuration

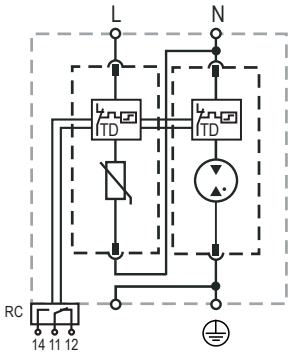

Legend

L *Line*
N *Neutral*
⏚ *Protective Earth*
RC *Remote Contacts*
TD *Thermal Disconnection*

Description

Surge protection devices (SPDs) provide equipment protection from overvoltage events lasting micro-seconds. By limiting the overvoltage to the equipment during these events, costly equipment damage and downtime can be mitigated.

The surge protection devices for the 1+1 configuration are available for 60 V to 277 V nominal voltage sub-distribution board applications.

Features & Benefits

FEATURES	BENEFITS
Capability to clamp and withstand high-energy transients	Ensures low-residual voltage during high-energy surge events and higher nominal discharge current to prevent disruption, downtime, and degradation or damage to equipment
UL and VDE-IEC compliant in single part number	One component can be utilized globally, reducing inventory needs and simplifying allocation of parts
Interlocking tab mechanism	Secures module to withstand vibration
No additional overcurrent protection devices required in UL applications	Reduces the number of components and costs required for protection
Compact footprint	Increases panel design flexibility
Visual life indicator	Quick visual determines module replacement status to avoid loss of protection
Pluggable modules	Fast and simple to replace, minimizing maintenance and downtime. No tools required
Thermal protection	Eliminates catastrophic failure
IP20 protection rating	Finger-safe design increases worker protection

Module & Base Ordering Information

Ordering Number	IEC Electrical										UL Electrical				Single Unit Weight
	Nominal AC Voltage (50/60Hz) (U_d/U_n)	Maximum Continuous Operating AC Voltage (L-N / N-PE U_c)	Nominal Discharge Current (8/20 µs) (L-N / N-PE I_n)	Maximum Discharge Current (8/20 µs) (L-N / N-PE I_{max})	Voltage Protection Level (L-N / N-PE U_p)	Follow Current Interrupt Rating (N-PE I_{fi})	Short-Circuit AC Current Rating (L-N I_{SCCR})	TOV Withstand 5 s (L-N U_T)	TOV 120 min (L-N U_T) / Mode	TOV Withstand 200 ms (N-PE U_T)	Maximum Continuous AC Operating Voltage (L-N / N-PE MCOV)	Voltage Protection Rating (L-N / N-PE VPR)	Nominal Discharge Current (8/20 µs) (L-N / N-PE I_n)	Short-Circuit Current Rating (L-N SCCR)	
SPD2-075-1P1-R	60 V	75 V / 305 V	20 kA / 40 kA	50 kA / 65 kA	800 V / 1500 V	100 A_{RMS}	25 kA / 50 kA	114 V	114 V / Withstand	1200 V	75 V / 305 V	330 V / 1000 V	20 kA / 20 kA	100 kA	124 g (0.274 lb)
SPD2-150-1P1-R	120 V	150 V / 305 V	20 kA / 40 kA	50 kA / 65 kA	1250 V / 1500 V	100 A_{RMS}	25 kA / 50 kA	229 V	229 V / Withstand	1200 V	150 V / 305 V	600 V / 1000 V	20 kA / 20 kA	200 kA	128 g (0.283 lb)
SPD2-300-1P1-R	240 V	300 V / 305 V	20 kA / 40 kA	50 kA / 65 kA	1500 V / 1500 V	100 A_{RMS}	25 kA / 50 kA	337 V	442 V / Safe Fail	1200 V	300 V / 305 V	900 V / 1000 V	20 kA / 20 kA	150 kA	135 g (0.298 lb)
SPD2-350-1P1-R	277 V	350 V / 305 V	20 kA / 40 kA	50 kA / 65 kA	1750 V / 1500 V	100 A_{RMS}	25 kA / 50 kA	403 V	529 V / Safe Fail	1200 V	350 V / 305 V	1000 V / 1000 V	20 kA / 20 kA	200 kA	140 g (0.309 lb)

© 2020 Littelfuse, Inc.

Module & Base Part Numbering System

SPD2 VVV XPZ R

- **Series** — SPD2
- **Maximum Continuous Operating AC Voltage** — VVV
- **Number of Poles** — X
- **Neutral** (1=yes or 0=no) — P
- **Module & Base** — R

Module Only Part Numbering System

SPD2 VVV M

- **Series** — SPD2
- **Maximum Continuous Operating AC Voltage** — VVV
- **Module Only** — M

Replacement Module Ordering Information

Ordering Number	IEC Electrical										UL Electrical				Single Unit Weight
	Nominal AC Voltage (50/60Hz) (U_c/U_n)	Maximum Continuous Operating AC Voltage (L-N / N-PE U_c)	Nominal Discharge Current (8/20 µs) (L-N / N-PE I_n)	Maximum Discharge Current (8/20 µs) (L-N / N-PE I_{max})	Voltage Protection Level (L-N / N-PE U_p)	Follow Current Interrupt Rating (N-PE I_{fi})	Short-Circuit AC Current Rating (L-N I_{SCCR})	TOV Withstand 5 s (L-N U_T)	TOV 120 min (L-N U_T) / Mode	TOV Withstand 200 ms (N-PE U_T)	Maximum Continuous AC Operating Voltage (L-N / N-PE MCOV)	Voltage Protection Rating (L-N / N-PE VPR)	Nominal Discharge Current (8/20 µs) (L-N / N-PE I_n)	Short-Circuit Current Rating (L-N SCCR)	
SPD2-040-M	0 V	40 V / 305 V	20 kA / 40 kA	50 kA / 65 kA	1500 V (N-PE)	100 A_{RMS}	25 kA / 50 kA	N/A	N/A	1200 V	305 V (N-PE)	1000 V (N-PE)	20 kA / 20 kA	N/A	42 g (0.093 lb)
SPD2-075-M	60 V	75 V / 305 V	20 kA / 40 kA	50 kA / 65 kA	800 V / 1500 V	100 A_{RMS}	25 kA / 50 kA	114 V	114 V / Withstand	1200 V	75 V / 305 V	330 V / 1000 V	20 kA / 20 kA	100 kA	50 g (0.111 lb)
SPD2-150-M	120 V	150 V / 305 V	20 kA / 40 kA	50 kA / 65 kA	1250 V / 1500 V	100 A_{RMS}	25 kA / 50 kA	229 V	229 V / Withstand	1200 V	150 V / 305 V	600 V / 1000 V	20 kA / 20 kA	200 kA	54 g (0.120 lb)
SPD2-300-M	240 V	300 V / 305 V	20 kA / 40 kA	50 kA / 65 kA	1500 V / 1500 V	100 A_{RMS}	25 kA / 50 kA	337 V	442 V / Safe Fail	1200 V	300 V / 305 V	900 V / 1000 V	20 kA / 20 kA	150 kA	61 g (0.135 lb)
SPD2-350-M	277 V	350 V / 305 V	20 kA / 40 kA	50 kA / 65 kA	1750 V / 1500 V	100 A_{RMS}	25 kA / 50 kA	403 V	529 V / Safe Fail	1200 V	350 V / 305 V	1000 V / 1000 V	20 kA / 20 kA	200 kA	68 g (0.146 lb)

Specifications

Network Systems TT, TN-S
Mode of Protection L-N, N-PE
Nominal Discharge Current (8/20 µs) (L-N / N-PE I_n) 20 kA/40 kA
Maximum Discharge Current (8/20 µs) (L-N / N-PE I_{max}) 50 kA/65 kA
Protective Elements High Energy MOV and GDT
Response Time (L-N / N-PE t_A) < 25 ns
Back-Up Fuse (max) 315 A/250 A Gg
Number of Ports 1

Mechanical & Environmental

Operating Temperature Range (T_a) -40 °C to +80 °C (-40 °F to +185 °F)
Permissible Operating Humidity (RH) 5% to 95%
Altitude (max) 4,000 m (13,123 ft)
Terminal Screw Torque) (M_{max}) 4.5 Nm (39.9 lbf-in)
Conductor Cross Section (max) 35 mm² (2 AWG) (Solid, Stranded)/ 25 mm² (4 AWG) (Flexible)
Mounting 35 mm DIN Rail, EN60715
Degree of Protection IP20 (built-in)
Housing Material Thermoplastic: Extinguishing Degree UL 94 V-0
Thermal Protection Yes
Operating State/Fault Indication Green Flag/No Green Flag
Remote Contact Switching Capacity AC: 250 V/1 A, 125 V/1 A; DC: 48 V/0.5 A, 24 V/0.5 A, 12 V/0.5 A
Remote Contact Conductor Cross Section (max) 1.5 mm² (16 AWG) (Solid)
Standards Passed IEC 61643-11:2011
EN 61643-11:2012
UL 1449, 4th edition

Product Dimensions

2TE Module and Base **H** 90.0 mm (3.54”); **W** 36.0 mm (1.42”); **D** 70.0 mm (2.76”)
1TE Replacement Module **H** 45.0 mm (1.77”); **W** 18.0 mm (0.71”); **D** 57.2mm (2.25”)

Package Dimensions

2TE Module and Base **H** 102.0 mm (4.01”); **W** 46.0 mm (1.81”); **D** 110.0 mm (4.33”)
1TE Replacement Module **H** 102.0 mm (4.01”); **W** 28.0 mm (1.10”); **D** 110.0 mm (4.33”)

Warranty – Visit **www.littelfuse.com/warranty** for details.

© 2020 Littelfuse, Inc.

Class II/Type 2/Type 1 CA Pluggable Multi-Pole

Description

Surge protection devices (SPDs) provide equipment protection from transient overvoltage events lasting micro-seconds. By limiting the overvoltage to the equipment during these events, costly damage and downtime can be mitigated.

The surge protection devices for the 3+1 configuration are available for 240 V to 277 V nominal voltage sub-distribution board applications.

Internal Configuration

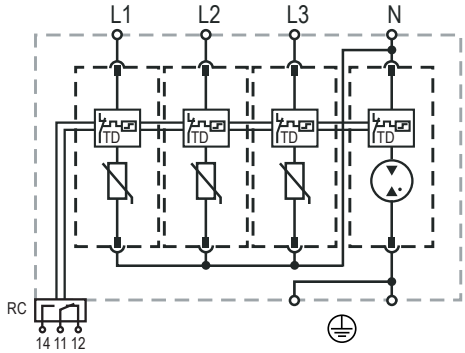

Legend

L *Line*
N *Neutral*
⏚ *Protective Earth*
RC *Remote Contacts*
TD *Thermal Disconnection*

Features & Benefits

FEATURES	BENEFITS
Capability to clamp and withstand high-energy transients	Ensures low-residual voltage during high-energy surge events and higher nominal discharge current to prevent disruption, downtime, and degradation or damage to equipment
UL and VDE-IEC compliant in single part number	One component can be utilized globally, reducing inventory needs and simplifying allocation of parts
Interlocking tab mechanism	Secures module to withstand vibration
No additional overcurrent protection devices required in UL applications	Reduces the number of components and costs required for protection
Compact footprint	Increases panel design flexibility
Visual life indicator	Quick visual determines module replacement status to avoid loss of protection
Pluggable modules	Fast and simple to replace, minimizing maintenance and downtime. No tools required
Thermal protection	Eliminates catastrophic failure
IP20 protection rating	Finger-safe design increases worker protection

Module & Base Ordering Information

Ordering Number	IEC Electrical										UL Electrical				Single Unit Weight
	Nominal AC Voltage (50/60Hz) (U_c/U_n)	Maximum Continuous Operating AC Voltage (L-N / N-PE U_c)	Nominal Discharge Current (8/20 µs) (L-N / N-PE I_n)	Maximum Discharge Current (8/20 µs) (L-N / N-PE I_{max})	Voltage Protection Level (L-N / N-PE U_p)	Follow Current Interrupt Rating (N-PE I_{fi})	Short-Circuit AC Current Rating (L-N I_{SCCR})	TOV Withstand 5 s (L-N U_T)	TOV 120 min (L-N U_T) / Mode	TOV Withstand 200 ms (N-PE U_T)	Maximum Continuous AC Operating Voltage (L-N / N-PE MCOV)	Voltage Protection Rating (L-N / N-PE VPR)	Nominal Discharge Current (8/20 µs) (L-N / N-PE I_n)	Short-Circuit Current Rating (L-N SCCR)	
SPD2-300-3P1-R	240 V	300 V/ 305 V	20 kA/ 40 kA	50 kA/ 65 kA	1500 V/ 1500 V	100 A_{RMS}	25 kA/ 50 kA	337 V	442 V/ Safe Fail	1200 V	300 V/ 305 V	900 V/ 1000 V	20 kA/ 20 kA	150 kA	486 g (1.072 lb)
SPD2-350-3P1-R	277 V	350 V/ 305 V	20 kA/ 40 kA	50 kA/ 65 kA	1750 V/ 1500 V	100 A_{RMS}	25 kA/ 50 kA	403 V	529 V/ Safe Fail	1200 V	350 V/ 305 V	1000 V/ 1000 V	20 kA/ 20 kA	200 kA	501 g (1.105 lb)

© 2020 Littelfuse, Inc.

Module & Base Part Numbering System

SPD2 VVV XPZ R

- **Series** — SPD2
- **Maximum Continuous Operating AC Voltage** — VVV
- **Number of Poles** — X
- **Neutral** (1=yes or 0=no) — P
- **Module & Base** — R

Module Only Part Numbering System

SPD2 VVV M

- **Series** — SPD2
- **Maximum Continuous Operating AC Voltage** — VVV
- **Module Only** — M

Replacement Module Ordering Information

Ordering Number	IEC Electrical										UL Electrical				Single Unit Weight
	Nominal AC Voltage (50/60Hz) (U_d/U_n)	Maximum Continuous Operating AC Voltage (L-N / N-PE U_c)	Nominal Discharge Current (8/20 µs) (L-N / N-PE I_n)	Maximum Discharge Current (8/20 µs) (L-N / N-PE I_{max})	Voltage Protection Level (L-N / N-PE U_p)	Follow Current Interrupt Rating (N-PE I_f)	Short-Circuit AC Current Rating (L-N I_{SCCR})	TOV Withstand 5 s (L-N U_T)	TOV 120 min (L-N U_T) / Mode	TOV Withstand 200 ms (N-PE U_T)	Maximum Continuous AC Operating Voltage (L-N / N-PE MCOV)	Voltage Protection Rating (L-N / N-PE VPR)	Nominal Discharge Current (8/20 µs) (L-N / N-PE I_n)	Short-Circuit Current Rating (L-N SCCR)	
SPD2-040-M	0 V	40 V / 305 V	20 kA / 40 kA	50 kA / 65 kA	1500 V (N-PE)	100 A_{RMS}	25 kA / 50 kA	N/A	N/A	1200 V	305 V (N-PE)	1000 V (N-PE)	20 kA / 20 kA	N/A	42 g (0.093 lb)
SPD2-300-M	240 V	300 V / 305 V	20 kA / 40 kA	50 kA / 65 kA	1500 V / 1500 V	100 A_{RMS}	25 kA / 50 kA	337 V	442 V / Safe Fail	1200 V	300 V / 305 V	900 V / 1000 V	20 kA / 20 kA	150 kA	61 g (0.135 lb)
SPD2-350-M	277 V	350 V / 305 V	20 kA / 40 kA	50 kA / 65 kA	1750 V / 1500 V	100 A_{RMS}	25 kA / 50 kA	403 V	529 V / Safe Fail	1200 V	350 V / 305 V	1000 V / 1000 V	20 kA / 20 kA	200 kA	66 g (0.146 lb)

Specifications

Network Systems	TT, TN-S
Mode of Protection	L-N, N-PE
Nominal Discharge Current (8/20 µs) (L-N / N-PE I_n)	20 kA/40 kA
Maximum Discharge Current (8/20 µs) (L-N / N-PE I_n)	50 kA/65 kA
Protective Elements	High Energy MOV and GDT
Response Time (L-N / N-PE t_A)	< 25 ns
Back-Up Fuse (max)	315 A/250 A Gg
Number of Ports	1
Mechanical & Environmental	
Operating Temperature Range (T_a)	-40 °C to +80 °C (-40 °F to +185 °F)
Permissible Operating Humidity (RH)	5% to 95%
Altitude (max)	4,000 m (13,123 ft)
Terminal Screw Torque) (M_{max})	4.5 Nm (39.9 lbf-in)
Conductor Cross Section (max)	35 mm² (2 AWG) (Solid, Stranded)/ 25 mm² (4 AWG) (Flexible)
Mounting	35 mm DIN Rail, EN60715
Degree of Protection	IP20 (built-in)
Housing Material	Thermoplastic: Extinguishing Degree UL 94 V-0
Thermal Protection	Yes
Operating State/Fault Indication	Green Flag/No Green Flag
Remote Contact Switching Capacity	AC: 250 V/1 A, 125 V/1 A; DC: 48 V/0.5 A, 24 V/0.5 A, 12 V/0.5 A
Remote Con Conductor Cross Section (max)	1.5 mm² (16 AWG) (Solid)
Standards Passed	IEC 61643-11:2011 EN 61643-11:2012 UL 1449, 4th edition
Product Dimensions	
4TE Module and Base	**H** 90.0 mm (3.54"); W 72.0 mm (2.84"); **D** 70.0 mm (2.76")
1TE Replacement Module	**H** 45.0 mm (1.77"); **W** 18.0 mm (0.71"); **D** 57.2 mm (2.25")
Package Dimensions	
4TE Module and Base	**H** 102.0 mm (4.01"); **W** 82.0 mm (3.23"); **D** 110.0 mm (4.33")
1TE Replacement Module	**H** 102.0 mm (4.01"); **W** 28.0 mm (1.10"); **D** 110.0 mm (4.33")

Warranty – Visit **www.littelfuse.com/warranty** for details.

© 2020 Littelfuse, Inc.

Class 2 (IEC)/Type 2 (EN)/Type 1CA (UL) Pluggable Multi-Pole for PV Systems

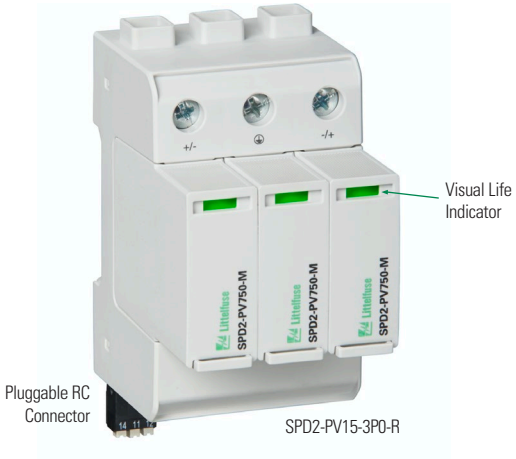

Description

Surge protective devices (SPDs) provide equipment protection from transient overvoltage events lasting micro-seconds. By limiting the overvoltage to the equipment during these events, costly damage and downtime can be mitigated.

The surge protective devices for solar string box and inverter applications are available in 1100 and 1500 V dc in the 3+0 configuration.

Internal Configuration

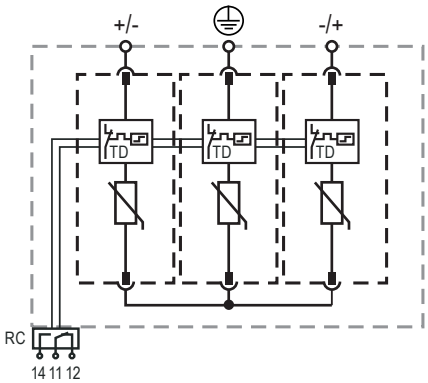

Legend

⏚ *Protective Earth*
RC *Optional Remote Contact*
TD *Thermal Disconnection*

Features & Benefits

FEATURES	BENEFITS
Capability to clamp and withstand high-energy transients	Ensures low-residual voltage during high-energy surge events and higher nominal discharge current to prevent disruption, downtime, and degradation or damage to equipment
No additional overcurrent protection devices required in UL applications	Reduces the number of components and costs required for protection
Compact footprint	Increases panel design flexibility
Visual life indicator	Quick visual determines module replacement status to avoid loss of protection
Pluggable modules	Fast and simple to replace, minimizing maintenance and downtime. No tools required
Thermal protection	Eliminates catastrophic failure
IP20 protection rating	Finger-safe design increases worker protection

Module & Base Ordering Information

Ordering Number	IEC Electrical						UL Electrical				Single Unit Weight
	Maximum Continuous Operating Dc Voltage (U_{CPV})	Nominal Discharge Current (8/20 µs) (I_n)	Maximum Discharge Current (8/20 µs) (I_{max})	Total Discharge Current (I_{Total})	Voltage Protection Level (U_p)	Short-Circuit Current Rating (I_{SCPV})	Maximum Permitted Dc Voltage (I_{pvdc})	Voltage Protection Rating (VPR)	Nominal Discharge Current (8/20 µs) (I_n)	Short-Circuit Current Rating (SCCR)	
SPD2-PV11-3P0 SPD2-PV11-3P0-R	1100 V	20 kA	40 kA	50 kA	4200 V	9 kA	1100 V	3000 V	20 kA	50 kA	333 g (0.734 lb)
SPD2-PV15-3P0 SPD2-PV15-3P0-R	1500 V	15 kA	40 kA	40 kA	4800 V	9 kA	1500 V	4000 V	20 kA	65 kA	363 g (0.800 lb)

© 2020 Littelfuse, Inc.

Module & Base Part Numbering System

SPD2 PV VV XPZ R

- Series
- Photovoltaic
- Maximum Continuous Operating Dc Voltage in Hundreds
- Number of Poles
- Neutral (1=yes or 0=no)
- Optional Remote Contact

Module Only Part Numbering System

SPD2 PV VVV M

- Series
- Photovoltaic
- Dc Voltage
- Module Only

Replacement Module Ordering Information

Ordering Number	IEC Electrical						UL Electrical				Single Unit Weight
	Maximum Continuous Operating Dc Voltage (U_{CPV})	Nominal Discharge Current (8/20 µs) (I_n)	Maximum Discharge Current (8/20 µs) (I_{max})	Total Discharge Current (I_{Total})	Voltage Protection Level (U_p)	Short-Circuit Current Rating (I_{SCPV})	Maximum Permitted Dc Voltage (I_{pvdc})	Voltage Protection Rating (VPR)	Nominal Discharge Current (8/20 µs) (I_n)	Short-Circuit Current Rating (SCCR)	
SPD2-PV550-M	1100 V	20 kA	40 kA	50 kA	4200 V	9 kA	1100 V	3000 V	20 kA	50 kA	61 g (0.134 lb)
SPD2-PV750-M	1500 V	15 kA	40 kA	40 kA	4800 V	9 kA	1500 V	4000 V	20 kA	65 kA	71 g (0.157 lb)

Specifications

Mode of Protection (+) - PE, (-) - PE, (+) - (-)
Nominal Discharge Current (8/20 µs) (I_n) 20 kA
Maximum Discharge Current (8/20 µs) (I_{max}) Up to 40 kA
Protective Elements High Energy MOV
Response Time (t_A) < 25 ns
Number of Ports 1

Mechanical & Environmental

Operating Temperature Range (T_a) -40 °C to +80 °C (-40 °F to +185 °F)
Permissible Operating Humidity (RH) 5% to 95%
Altitude (max) 4,000 m (13,123 ft)
Terminal Screw Torque) (M_{max}) 4.5 Nm (39.9 lbf-in)
Conductor Cross Section (max) 35 mm² (2 AWG) (Solid, Stranded)/ 25 mm² (4 AWG) (Flexible)
Mounting 35 mm DIN Rail, EN60715
Degree of Protection IP20 (built-in)
Housing Material Thermoplastic: Extinguishing Degree UL 94 V-0
Thermal Protection Yes
Operating State/Fault Indication Green Flag/No Green Flag
Remote Contact Switching Capacity Ac: 250 V/1 A, 125 V/1 A; Dc: 48 V/0.5 A, 24 V/0.5 A, 12 V/0.5 A
Remote Contact Conductor Cross Section (max) 1.5 mm² (16 AWG) (Solid)
Standards Passed EN 50539-11:2013+A1:2014 UL 1449 4th Edition; E320116

Product Dimensions

3TE Module and Base **H** 90.7 mm (3.57"); **W** 53.8 mm (2.11"); **D** 66.1 mm (2.60")
1TE Replacement Module **H** 45.0 mm (1.77"); **W** 18.0 mm (0.71"); **D** 57.2 mm (2.25")

Package Dimensions

3TE Module and Base **H** 102.0 mm (4.01"); **W** 64.0 mm (2.52"); **D** 110.0 mm (4.33")
1TE Replacement Module **H** 102.0 mm (4.01"); **W** 28.0 mm (1.10"); **D** 110.0 mm (4.33")

Warranty – Visit **www.littelfuse.com/warranty** for details.

© 2020 Littelfuse, Inc.

Surge Protection Devices

SPD2 SERIES CROSS-REFERENCE GUIDE

This cross-reference tool includes the most popular Type 2 surge protection devices. It is meant to serve as a guide for quick identification and product selection. Please check all applicable specifications prior to making a product substitution or selection.

Littelfuse Part Number	Surge Device Type	Nominal AC or DC Voltage	Number of Poles	Neutral	ABB Part Number	Bourns Part Number	Citel Part Number	DEHN Part Number	Phoenix Contact Part Number	Raycap Part Number
SPD2-075-1P0-R	2	75 V ac	1	No	OVR T2 15-75 P TS	—	—	DEHNguard S 48 FM	VAL-MS 60/FM	ProTec T2-75-1+0-R
SPD2-075-1P1-R	2	75 V ac	1	Yes	—	—	DS240S-75VDC	—	VAL-VS-48/40/1+1-FM	ProTec T2-75-1+1-R
SPD2-150-1P0-R	2	150 V ac	1	No	OVR T2 40-150 P TS U	1250-1S-120	DS41S-120	DEHNguard SU 1P 120 R	VAL-US-120/40/1+0-FM	ProTec T2-150-1+0-R
SPD2-150-2P0-R	2	150 V ac	2	No	OVR T2 1N 40-150 P TS U	1250-2S-120	DS42S-120	DEHNguard MU SP 240 3W+G R	VAL-US-120/40/2+0-FM	ProTec T2-150-2+0-R
SPD2-150-3P0-R	2	150 V ac	3	No	OVR T2 2N 40-150 P TS U	1250-3S-120	DS43S-120	DEHNguard MU 3PY 208 3W+G R	VAL-SEC-T2-3C-175-FM	ProTec T2-150-3+0-R
SPD2-150-4P0-R	2	150 V ac	4	No	OVR T2 3N 40-150 P TS U	1250-4S-120	DS44S-120	DEHNguard MU 3PY 208 4W+G R	VAL-US-120/40/3+1-FM	ProTec T2-150-4+0-R
SPD2-150-1P1-R	2	150 V ac	1	Yes	—	—	DS42S-120/G	—	VAL-SEC-T2-1S-175-FM	ProTec T2-150-1+1-R
SPD2-300-1P0-R	2	300 V ac	1	No	OVR T2 40-275 P TS QS	1250-1S-230	DS41S-230	DEHNguard SU 1P 240 R	VAL-US-277/40/1+0-FM	ProTec T2-300-1+0-R
SPD2-300-2P0-R	2	300 V ac	2	No	OVR T2 1N 40-275 P TS QS	1250-2S-230	DS42S-230	DEHNguard MU SP 480 3W+G R	VAL-MS 230/2+0-FM	ProTec T2-300-2+0-R
SPD2-300-3P0-R	2	300 V ac	3	No	OVR T2 3L 40-275 P TS QS	1250-3S-230	DS43S-230	DEHNguard M TNC 275 FM	VAL-CP-3C-350	ProTec T2-300-3+0-R
SPD2-300-4P0-R	2	300 V ac	4	No	OVR T2 4L 40-275 P TS QS	1250-4S-230	DS44S-230	DEHNguard M TNS 275 FM	VAL-US-277/40/4+0-FM	ProTec T2-300-4+0-R
SPD2-300-1P1-R	2	300 V ac	1	Yes	OVR T2 1N 40-275 P TS QS	—	DS42S-230/G	DEHNguard MU 3PY 480 4W+G R	VAL-MS 230/1+1-FM	ProTec T2-300-1+1-R
SPD2-300-3P1-R	2	300 V ac	3	Yes	OVR T2 3N 40-275 P TS QS	—	DS44S-230/G	DEHNguard M TT 275 FM	VAL-MS 230/3+1-FM	ProTec T2-300-3+1-R
SPD2-350-1P0-R	2	350 V ac	1	No	OVR T2 40-320 P TS U	1250-1S-400	DS41S-400	DEHNguard SU 1P 347 R	—	ProTec T2-350-1+0-R
SPD2-350-2P0-R	2	350 V ac	2	No	OVR T2 1N 40-320 P TS U	1250-2S-400	DS42S-400	—	VAL-SEC-T2-2C-350-FM	ProTec T2-350-2+0-R
SPD2-350-3P0-R	2	350 V ac	3	No	OVR T2 3L 40-320 P TS U	1250-3S-400	DS43S-400	DEHNguard MU 3PY 480 3W+G R	VAL-SEC-T2-3C-350-FM	ProTec T2-350-3+0-R
SPD2-350-4P0-R	2	350 V ac	4	No	OVR T2 3N 40-320 P TS U	1250-4S-400	DS44S-400	DEHNguard M TNS 385 FM	—	ProTec T2-350-4+0-R
SPD2-350-1P1-R	2	350 V ac	1	Yes	OVR T2 1N 40-350 P TS QS	—	—	DEHNguard M TT 2P 385 FM	VAL-SEC-T2-1S-350-FM	ProTec T2-350-1+1-R
SPD2-350-3P1-R	2	350 V ac	3	Yes	—	—	—	DEHNguard M TT 385 FM	VAL-SEC-T2-3S-350-FM	ProTec T2-350-3+1-R
SPD2-480-1P0-R	2	480 V ac	1	No	OVR T2 40-440 P TS U	1250-1S-480	DS41S-400	DEHNguard S 440 FM	VAL-US-347/30/1+0-FM	ProTec T2-480-1+0-R
SPD2-480-2P0-R	2	480 V ac	2	No	OVR T2 1N 40-440 P TS U	1250-2S-480	DS42S-400	—	VAL-US-347/30/1+1V-FM	ProTec T2-480-2+0-R
SPD2-480-3P0-R	2	480 V ac	3	No	OVR T2 3L 40-440 P TS U	1250-3S-480	DS43S-400	DEHNguard MU 3PY 600 3W+G R	VAL-US-347/30/3+0-FM	ProTec T2-480-3+0-R
SPD2-480-4P0-R	2	480 V ac	4	No	OVR T2 3N 40-440 P TS U	1250-4S-480	DS44S-400	DEHNguard MU 3PY 600 4W+G R	—	ProTec T2-480-4+0-R
SPD2-550-1P0-R	2	550 V ac	1	No	OVR T2 40-550 P TS U	—	DS41S-600	DEHNguard S 600 FM	VAL-US-480D/30/1+0-FM	ProTec T2-550-1+0-R
SPD2-550-2P0-R	2	550 V ac	2	No	OVR 1N 40-550 P TS U	—	—	—	VAL-US-480D/30/2+0-FM	ProTec T2-550-2+0-R
SPD2-550-3P0-R	2	550 V ac	3	No	OVR T2 3L 40-550 P TS U	—	—	DEHNguard MU 3PD 480 3W+G R	VAL-US-480D/30/3+0-FM	ProTec T2-550-3+0-R
SPD2-550-4P0-R	2	550 V ac	4	No	OVR T2 3N 40-550 P TS U	—	—	—	VAL-US-480HLD/30/3+1-FM	ProTec T2-550-4+0-R
SPD2-750-1P0-R	2	750 V ac	1	No	OVR T2 40-600 P TS QS	—	—	DEHNguard S WE 600 FM	—	ProTec T2-750-1+0-R
SPD2-750-2P0-R	2	750 V ac	2	No	—	—	—	—	—	ProTec T2-750-2+0-R
SPD2-750-3P0-R	2	750 V ac	3	No	OVR T2 3L 40-600 P TS QS	—	DS43S-690WD	DEHNguard M WE 600 FM	VAL-MS 750/30/3+0 FM	ProTec T2-750-3+0-R
SPD2-PV11-3P0-R	2	1100 V dc	3	No	OVR PV 40-800 P TS U	1420-PV-1000	DS50VGPVS-1000	DEHNguard M YPV 1200 FM	VAL-MS 1000 DC-PV/2+V-FM	ProTec T2-1100PV-3+0-R
SPD2-PV15-3P0-R	2	1500 V dc	3	No	OVR PV 40-1500H P TS U	—	DV50VGPVS-1500	DEHNguard M YPV 1500 FM	VAL-MB-T2 1500 DC-PV/2+V-FM	ProTec T2-1500PV-3+0-R

© 2020 Littelfuse, Inc.

LOCAL RESOURCES FOR A **GLOBAL** MARKET

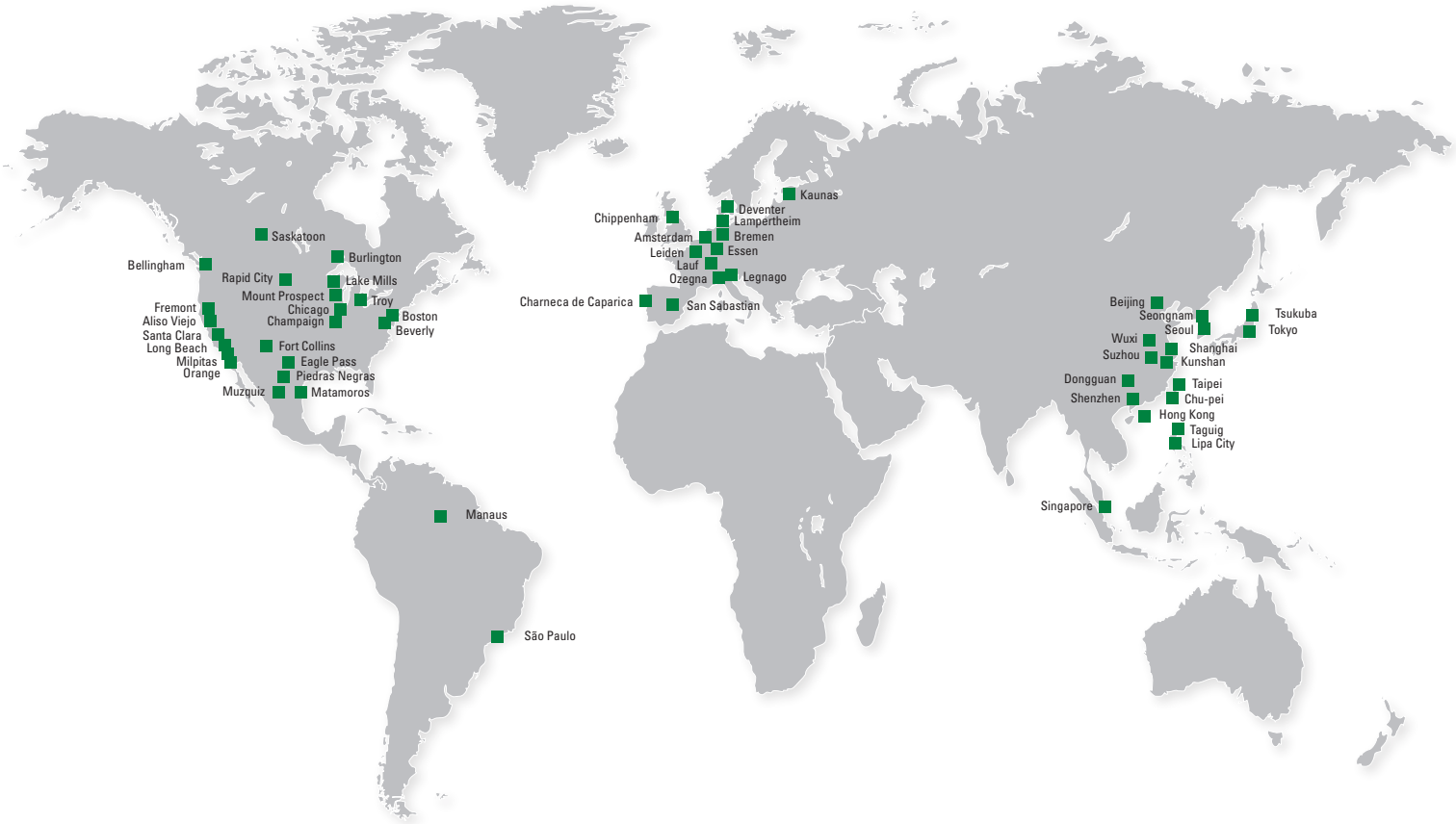

Your Partner for Dependable Protection, Safety & Control

The Industrial division of Littelfuse delivers vital products to address customer needs for protection, safe control and distribution of electrical power in industrial applications.

In addition to our surge protection devices, our product portfolio includes a comprehensive line of fuses, fuse holders, protection relays, and timers to minimize electrical safety hazards, limit equipment damage, improve productivity, and safeguard personnel from injury due to electrical faults.

Fuses & Fuse Holders

- Custom OEM Products
- Distributor & Splicer Blocks
- Electrical Switch Panels
- Fuse Blocks & Holders
- Medium Voltage Fuses
- POWR-*SPEED*® Fuses
- Solar Fuses
- UL Class Fuses
- 10 x 38 mm Fuses

Protection Relays & Controls

- Arc-Flash Protection Relays
- Feeder Protection
- Ground-Check Relays
- Ground-Fault Protection Relays
- Industrial Shock-Block® GFCI
- Motor & Pump Protection
- Resistance Grounding/ Monitoring
- Single-Function Relays
- Timers & Flashers

For a comprehensive list of products, visit **Littelfuse.com**

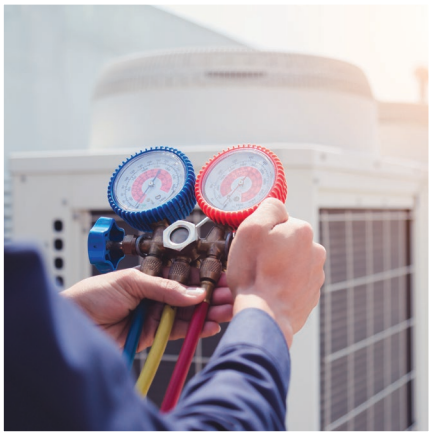

North America

Littelfuse World Headquarters
8755 West Higgins Road, Suite 500
Chicago, IL 60631, USA

Littelfuse SymCom
222 Disk Drive
Rapid City, SD 57701, USA

Littelfuse Startco
140 – 15 Innovation Boulevard
(The Galleria Building)
Saskatoon, SK S7N 2X8
Tel: +1-306-373-5505

Technical Support:
Tel: +1-800-TEC-FUSE
E-mail: techline@littelfuse.com

Customer Service:
Tel: +1-800-227-0029
E-mail: PG_CSG@littelfuse.com

Asia

Littelfuse
Unit 1604B Desay Building,
Gaoxin Nanyi Ave.
Hi-Tech Industrial Park
Nashan District
Shenzen, 518057, China
+86 755 8207 0760

Europe

Littelfuse
Julius-Bamberger-Str. 8a
Bremen, D-28279, Germany
+49 421 82 87 3 147

Littelfuse products are certified to many standards around the world. To check certifications on specific components, please refer to the specific product datasheet on Littelfuse.com.

Disclaimer Notice – Information furnished is believed to be accurate and reliable. However, users should independently evaluate the suitability of and test each product selected for their own applications. Littelfuse products are not designed for, and may not be used in, all applications. Read complete Disclaimer Notice at **www.littelfuse.com/product-disclaimer.**

© 2020 Littelfuse, Inc.

FORM PF612
Rev: 0-B-082020