SMF339KJT ✔ ACTIVE

CGS | CGS SM

TE Internal #: 5-1879022-1

39K ohm, Surface Mount Power Resistor, Metal Film, 3 W, 5 %, ±100 ppm/°C, Solder, 2 Terminations, 5 mm [.197 in] Height, CGS SM

View on TE.com >

Passive Components > Resistors > Surface Mount Resistors > SMD Power Resistor: 7 Watt, 200-2M Ohm

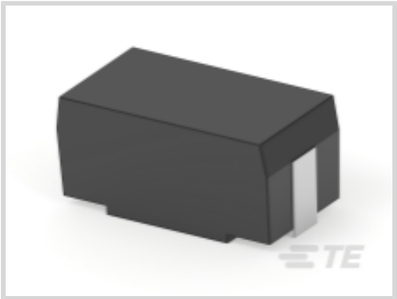

Resistance Value: **39K Ω**

Resistor Type: **Power Resistor**

Element Type: **Metal Film**

Power Rating: **3 W**

Resistance Class: **1kΩ – 1MΩ**

All SMD Power Resistor: 7 Watt, 200-2M Ohm (316)

Features

Product Type Features

Resistor Type	Power Resistor
Element Type	Metal Film

Configuration Features

Number of Resistors	1

Electrical Characteristics

Operating Voltage	500 V
Resistance Value	39K Ω
Power Rating	3 W
Resistance Class	1kΩ – 1MΩ
Passive Component Tolerance	5 %

Termination Features

Surface Mount Resistor Termination Type	Solder

Number of Terminations	2

Dimensions

Product Height	5 mm[.197 in]
Product Length	10.5 mm[.413 in]
Product Width	5.5 mm[.217 in]

Usage Conditions

Temperature Coefficient	±100 ppm/°C

Industry Standards

UL Flammability Rating	UL 94V-0
ESD HBM Classification	2
Moisture Sensitivity Level	1

Packaging Features

Packaging Method	Taped & Reeled

Product Compliance

For compliance documentation, visit the product page on TE.com>

EU RoHS Directive 2011/65/EU	Compliant
EU ELV Directive 2000/53/EC	Compliant
China RoHS 2 Directive MIIT Order No 32, 2016	No Restricted Materials Above Threshold
EU REACH Regulation (EC) No. 1907/2006	Current ECHA Candidate List: JAN 2025 (247) Candidate List Declared Against: JAN 2025 (247) Does not contain REACH SVHC
Halogen Content	Low Halogen - Br, Cl, F, I < 900 ppm per homogenous material. Also BFR/CFR/PVC Free
Solder Process Capability	Wave solder capable to 265°C

Product Compliance Disclaimer

This information is provided based on reasonable inquiry of our suppliers and represents our current actual knowledge based on the information they provided. This information is subject to change. The part numbers that TE has identified as EU RoHS compliant have a maximum concentration of 0.1% by weight in homogenous materials for lead, hexavalent chromium, mercury, PBB, PBDE, DBP, BBP, DEHP, DIBP, and 0.01% for cadmium, or qualify for an exemption to these limits as defined in the Annexes of Directive 2011/65/EU (RoHS2). Finished electrical and electronic equipment products will be CE marked as required by Directive 2011/65/EU. Components may not be CE marked. Additionally, the part numbers that TE has identified as EU ELV compliant have a maximum concentration of 0.1% by weight in homogenous materials for lead, hexavalent chromium, and mercury, and 0.01% for cadmium, or qualify for an exemption to these limits as defined in the Annexes of Directive 2000/53/EC (ELV). Regarding the REACH Regulation, the information TE provides on SVHC in articles for this part number is based on the latest European Chemicals Agency (ECHA) 'Guidance on

requirements for substances in articles' posted at this URL: https://echa.europa.eu/guidance-documents/guidance-on-reach

Compatible Parts

TE Part # 4-2176620-6
SMQF3W 39K 5%

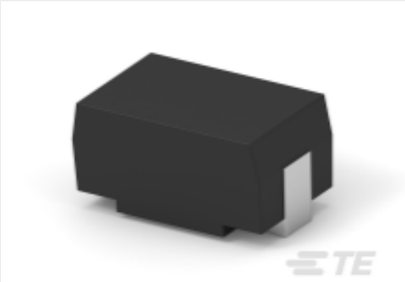

TE Part # CAT-C339-SM1
SMD Power Resistor: 7 Watt, 200-2M Ohm

TE Part # 1879233-9
SMW5 R22 5%

Also in the Series | CGS SM

Battery Holders(1)

Expanded Beam Fiber Optics(5)

LC Connectors(1)

RJ14 Connectors(1)

RJ22 Connectors(1)

RJ25 Connectors(1)

SC Connectors(2)

Customers Also Bought

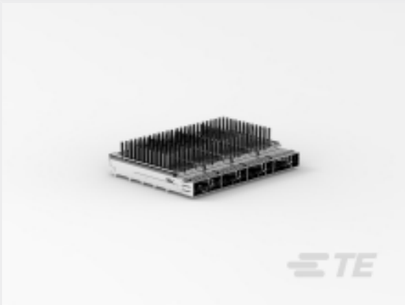

TE Part #2170745-3
CAGE ASSY, 1X4, QSFP28, SPRING, HS

TE Part #6-1879215-4
CPF 0402 21K 0.1% 25PPM 1K RL

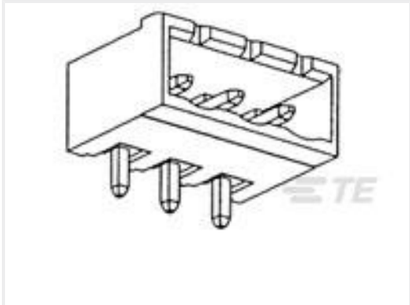

TE Part #796644-3
3POS 5.0MM CE R/A HDR,TRM BLK

TE Part #1825095-2
TP11CGPC204

TE Part #CAT-C339-SM1
SMD Power Resistor: 7 Watt, 200-2M Ohm

TE Part #1734366-1
Std USB Type A, VT, T/H

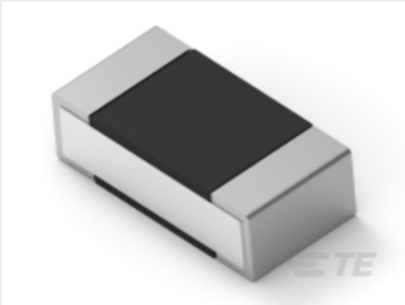

TE Part #7-2176311-7
RP 1E 0.1W 7K15 0.1% 25PPM 1K RL

TE Part #8-2176231-7
3522 39K 1% 3W

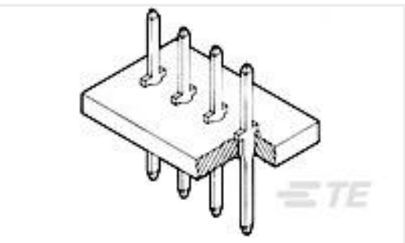

TE Part #2-5086182-2
MOD I POST LP, ROHS

Documents

Product Drawings

SMF3 39K 5%

English

CAD Files

3D PDF

3D

Customer View Model

ENG_CVM_CVM_5-1879022-1_BA.2d_dxf.zip

English

Customer View Model

ENG_CVM_CVM_5-1879022-1_BA.3d_igs.zip

English

Customer View Model

ENG_CVM_CVM_5-1879022-1_BA.3d_stp.zip

English

By downloading the CAD file I accept and agree to the Terms and Conditions of use.

Datasheets & Catalog Pages

1309350_PASSIVE_COMPONENT

English

8-1773459-4_POWER_FILTERING_AND_RESISTIVE_SOLUTIONS_FOR_ELEVATORS_AND_ESCALATORS

English

SMD Moulded Power Resistor - Type SM Series - Tyco Electronics Passives

English