REV.	ECN NO.	DATE	SIGN	DESCRIPTION
A	Initial Release	2017/07/27	Lingpeng	New Item.
B	LEN17A0081~96	2017-10-14	Lingpeng	Add The Label And Change The Title
C	N180019	2019-03-13	Peng	Add All Seals Product

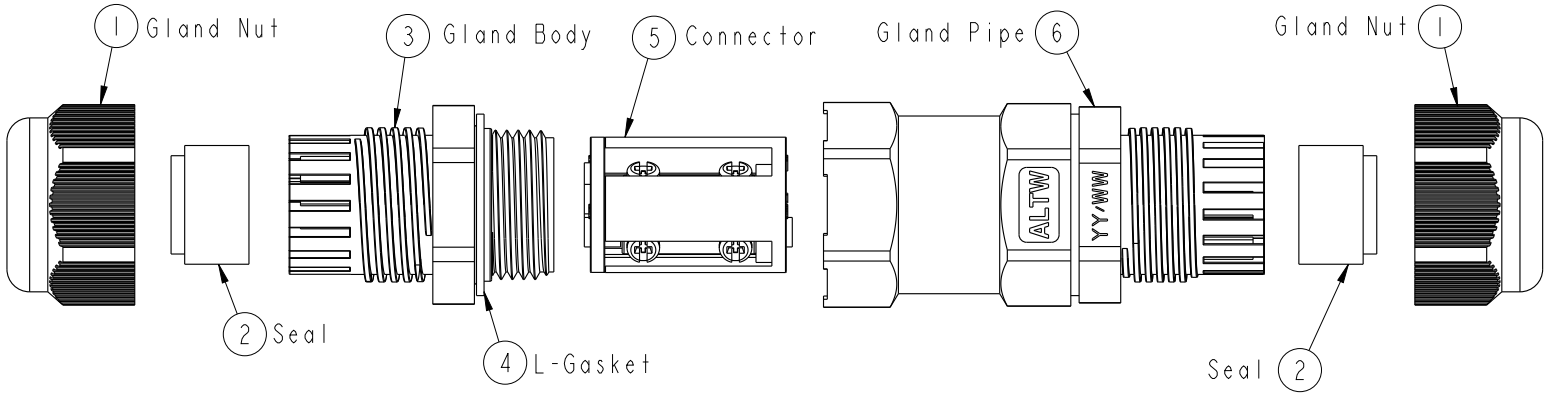

ALTW
CONFIDENTIAL
2019-03-13
R&D DEPT.

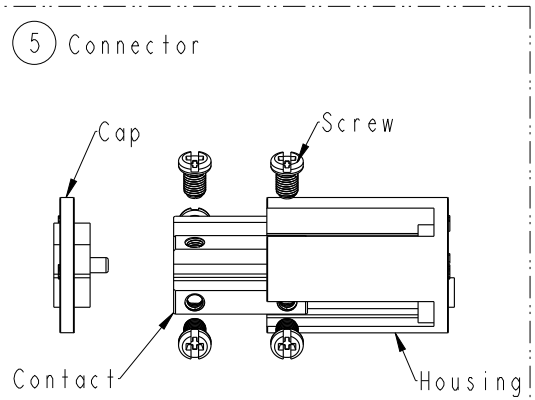

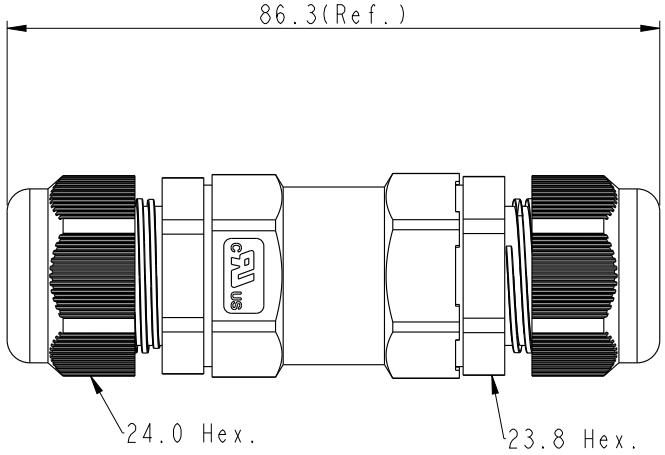

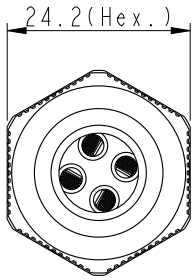

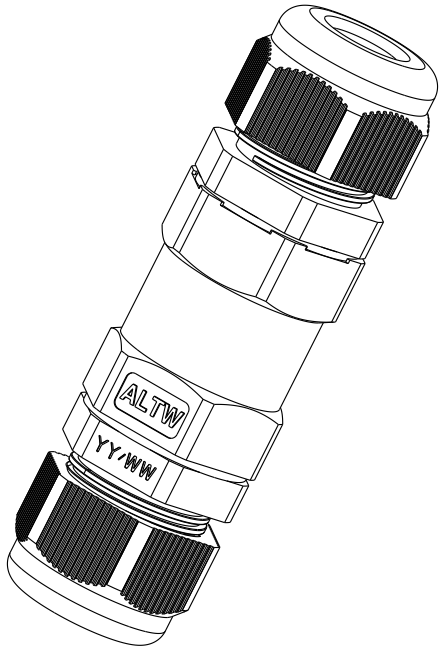

UNIT: mm	TITLE: (B) UL12 Cable Joiner Screw-in Type		ITEM NO	DRAWN BY: Lingpeng	DATE: 2019-03-14
TOLERANCE ±0.5mm	SCALE: 1:1	SIZE: A4	DWG NO: SC-L-UL12-XX-XX	CHECKED BY: MaFei	DATE: 2019-03-14
	REV.: C	WC-REV.: A.3	CUSTOMER: ALTW	APPROVED BY: Jerry	DATE: 2019-03-14
	SHEET 1 OF 2	(QC): Inspection item			

Amphenol LTW
安費諾亮泰企業股份有限公司

THIS DOCUMENT IS SUBJECT TO CHANGE WITHOUT NOTICE. IT IS CONFIDENTIAL AND A PROPERTY OF Amphenol LTW. DISCLOSURE TO THIRD PARTY HAS TO BE AUTHORIZED BY Amphenol LTW.

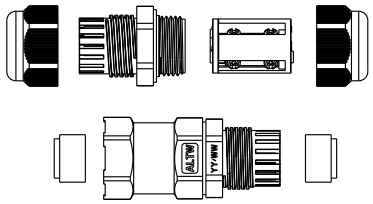

QTY: 1PCS

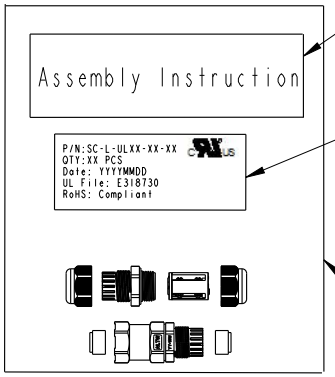

B

8 Instruction

10 Label

7 PE Bag

QTY: 120PCS

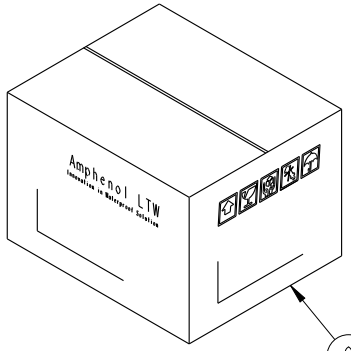

9 Carton

ALTW
CONFIDENTIAL
2019-03-14
R&D DEPT.

Both A Unassembled product And An Instruction Are In A PE Bag.
（將一套未組裝的產品和說明書，放置於一個PE袋，並封口）

SC-L-ULI2-XX-XX

L:Cable Joiner

Type: ULI2

No. of Condutor: 02-2Poles
03-3Poles
04-4Poles
05-5Poles

Seal's Color:

BL-Blue(藍色)	For Cable Range:	∅4.5~∅6.5mm
YW-Yellow(黃色)	For Cable Range:	∅6.5~∅8.5mm
GN-Green(綠色)	For Cable Range:	∅8.5~∅10.5mm
RD-Red(紅色)	For Cable Range:	∅10.5~∅11.5mm
C AA-All Seals	For Cable Range:	∅4.5~∅11.5mm

Note:

* QC Important Dimension To Check.
* Waterproof Rate: IP68 (50M,24H)
* Housing & Cap: PA66+GF, Black.
* Gland Pipe: PA66, Black.
* Gland Body: PA66, Black.
* Gland Nut: PA66, Black.
* Contact: Brass, Nickel Plated
* L-Gasket : Silicone, Yellow.
* Seal: Silicone, Blue & Yellow & Green & Red.
* Rated Voltage: 2~5 Pole 600V AC
* Rated Current: 2 & 3 Pole Max. 20A ,
  4 Pole Max. 15A.
  5 Pole Max. 8A.
* Operating Temperature: -40°~+105°.
* Gland Body Recommended Tightening Torque:
  8~10 Kgf.cm(0.78~0.98 N.m)
* Gland Nut Recommended Tightening Torque:
  8~10 Kgf.cm(0.78~0.98 N.m)
* Seal For Cable OD: ∅4.5~∅6.5mm, Blue.
  ∅6.5~∅8.5mm, Yellow.
  ∅8.5~∅10.5mm, Green .
  ∅10.5~∅11.5mm, Red.
* Screws for Wire connection recommended tightening torque: 2.00~4.50 kgf.cm / 0.196~0.44 N.m
* Applicable Wire gauge: 18AWG~12AWG(2~4 pole)
  18AWG~14AWG(5 pole)
* UL2238 Certification

Pole Assignments Front View

2 Pole

3 Pole

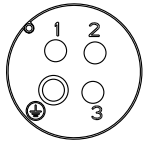

4 Pole

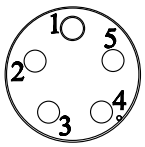

5 Pole

UNIT:mm	B ULI2 Cable Joiner Screw-in Type			ITEM NO	DRAWN BY Lingpeng	DATE 2019-03-14
TOLERANCE ±0.5mm	SCALE 1:1	SIZE A4	SHEET 2 OF 2	DWG NO SC-L-ULI2-XX-XX	CHECKED BY MaFei	DATE 2019-03-14
	REV. C	WC-REV. A.3	QC:Inspection item	CUSTOMER ALTW	APPROVED BY Jerry	DATE 2019-03-14

Amphenol LTW
安費諾亮泰企業股份有限公司

THIS DOCUMENT IS SUBJECT TO CHANGE WITHOUT NOTICE. IT IS CONFIDENTIAL AND A PROPERTY OF Amphenol LTW. DISCLOSURE TO THIRD PARTY HAS TO BE AUTHORIZED BY Amphenol LTW.