REV.	ECN NO.	DATE	SIGN	DESCRIPTION
E	LEN1790140~51	2017-08-29	Lingpeng	Change The Note
F	N180019	2017-08-29	Lingpeng	Add 5 Pole
G	C231483	2023-11-27	Wenxiang	G XI

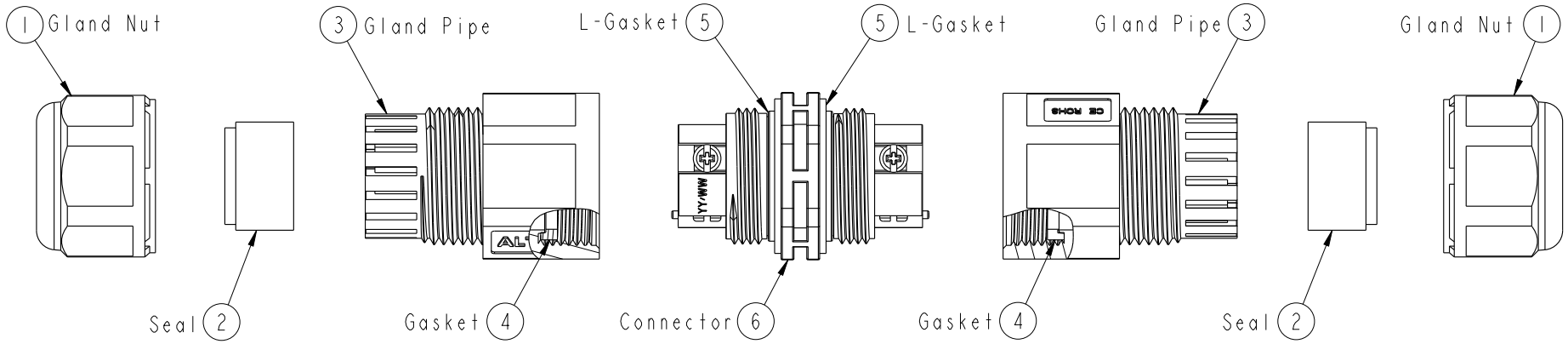

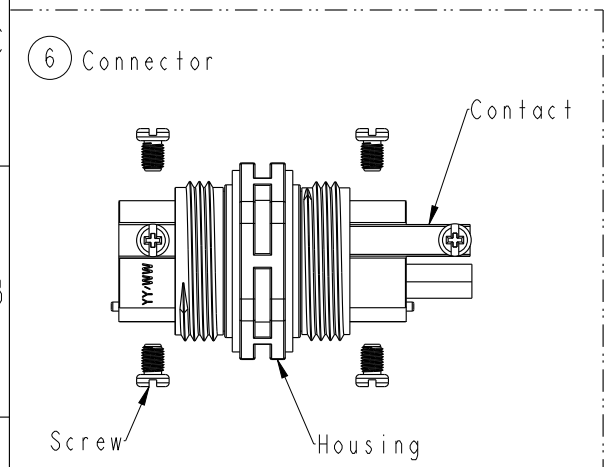

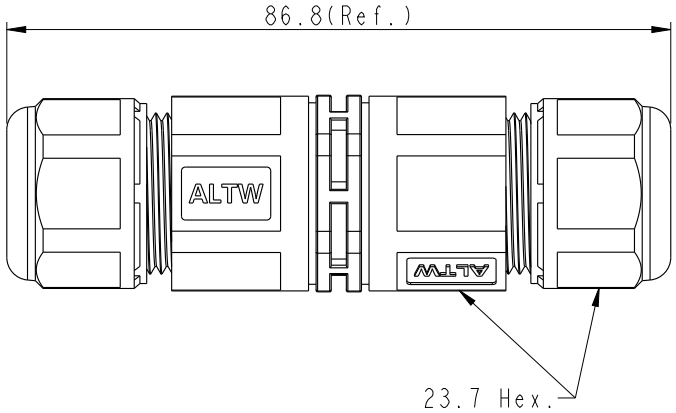

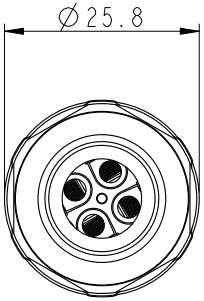

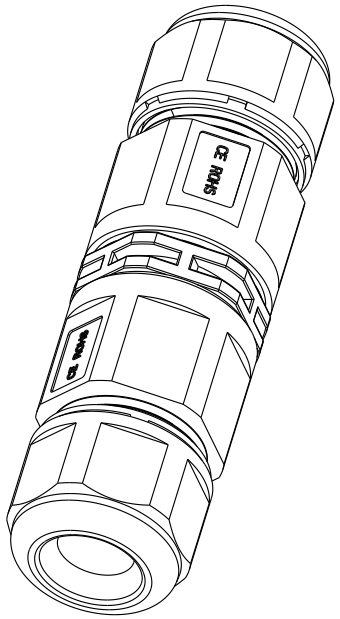

UNIT: mm	TITLE: PG11 Cable Joiner Screw-in Type	Amphenol LTW 安費諾亮泰企業股份有限公司	ITEM NO	DRAWN BY: Lingpeng	DATE: 2019-03-14
TOLERANCE ±0.5mm	SCALE: 1:1 / SIZE: A4 / SHEET 1 OF 2		DWG NO: SC-L-PG11-XX-XX	CHECKED BY: Ma Fei	DATE: 2019-03-14
	REV.: G / WC-REV.: A.13	QC: Inspection item	CUSTOMER: ALTW	APPROVED BY: Jerry	DATE: 2019-03-14

WI0814-03-RM01A2

THIS DOCUMENT IS SUBJECT TO CHANGE WITHOUT NOTICE. IT IS CONFIDENTIAL AND A PROPERTY OF Amphenol LTW. DISCLOSURE TO THIRD PARTY HAS TO BE AUTHORIZED BY Amphenol LTW.

D

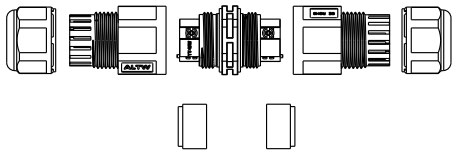

QTY: 1PCS

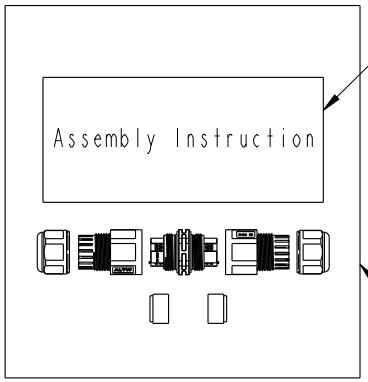

8 Instruction

7 PE Bag

QTY: 120PCS

G 料號尾綴是AA的料號
實物來料爲90pcs
其餘爲120PCS

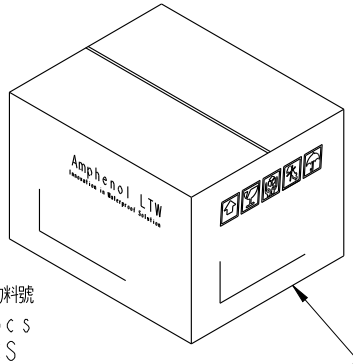

9 Carton

Both A Unassembled product And An Instruction Are In A PE Bag.
（將一套未組裝的產品和說明書，放置於一個PE袋，並封口）

SC-L-PGII-XX-XX

L:Cable Joiner

Type: PGII

No. of Condutor: 02-2Poles
03-3Poles
04-4Poles
05-5Poles

Seal's Color:

BL-Blue(藍色)	For Cable Range:	∅4.5~∅6.5mm
YW-Yellow(黃色)	For Cable Range:	∅6.5~∅8.5mm
GN-Green(綠色)	For Cable Range:	∅8.5~∅10.5mm
RD-Red(紅色)	For Cable Range:	∅10.5~∅12.5mm
F AA-All Seals	For Cable Range:	∅4.5~∅12.5mm

Note: E F

* QC Important Dimension To Check.
* Waterproof Rate: IP68 (50M,24H)
* Housing: PA66+GF, Black.
* Gland Nut: PA6+GF, Black.
* Gland Pipe: PA66, Black.
* Contact: Brass, Nickel Plated
* Gasket & L-Gasket : Silicone, Yellow.
* Seal: Silicone, Blue & Yellow & Green & Red.
* Rated Voltage: 2~4 Pole 450V AC
* Rated Current: 2 Pole Max. 30A ,
  3 & 4 Pole Max. 20A.
  5 Pole Max. 16A
* Operating Temperature: -40°~+105°.
* Gland Pipe Recommended Tightening Torque:
  8~10 Kgf.cm(0.78~0.98 N.m)
* Gland Nut Recommended Tightening Torque:
  8~10 Kgf.cm(0.78~0.98 N.m)
* Seal For Cable OD: ∅4.5~∅6.5mm, Blue.
  ∅6.5~∅8.5mm, Yellow.
  ∅8.5~∅10.5mm, Green .
  ∅10.5~∅12.5mm, Red.
* Screws for Wire connection recommended tightening torque: 2.00~4.50kgf.cm / 0.196~0.44 N.m
* Applicable Wire gauge (Stranded wire cross section)
  2~4Pole:0.75mm^2 (18AWG) ~ 2.5mm^2 (14AWG)
  5Pole:0.5mm^2 (20AWG) ~ 1.5mm^2 (16AWG)

Pole Assignments Front View

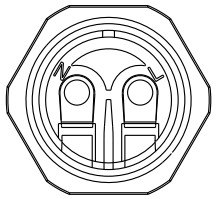

2 Pole

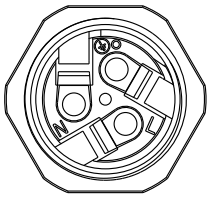

3 Pole

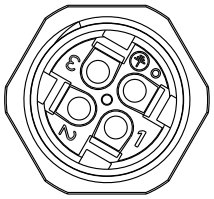

4 Pole

5 Pole

UNIT:mm	TITLE: PGII Cable Joiner Screw-in Type		ITEM NO	DRAWN BY: Lingpeng	DATE: 2019-03-14
TOLERANCE ±0.5mm	SCALE: 1:1 / SIZE: A4 / SHEET: 2 OF 2		DWG NO: SC-L-PGII-XX-XX	CHECKED BY: Ma Fei	DATE: 2019-03-14
	REV.: G / WC-REV.: A.13	QC:Inspection item	CUSTOMER: ALTW	APPROVED BY: Jerry	DATE: 2019-03-14

Amphenol LTW
安費諾亮泰企業股份有限公司

THIS DOCUMENT IS SUBJECT TO CHANGE WITHOUT NOTICE. IT IS CONFIDENTIAL AND A PROPERTY OF Amphenol LTW. DISCLOSURE TO THIRD PARTY HAS TO BE AUTHORIZED BY Amphenol LTW.