RN222-3-02-4M5 ✔ ACTIVE

Schaffner | Schaffner RN-Series

TE Internal #: 816568-SF

300 VDC, 3 A, PCB Terminal, PD2 Pollution Degree, IP00, Vertical, UL 94V-0, Board Mount, Schaffner RN-Series, EMC Chokes

View on TE.com >

EMI & EMC Solutions > EMC Chokes > EMC / RFI Chokes RN Series

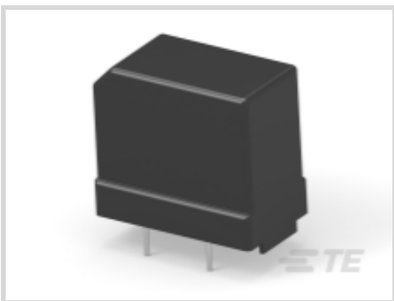
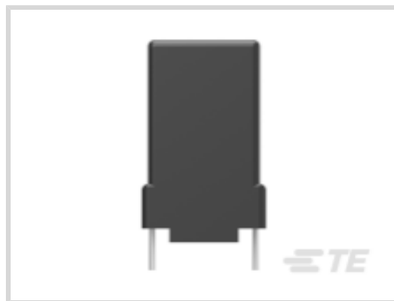

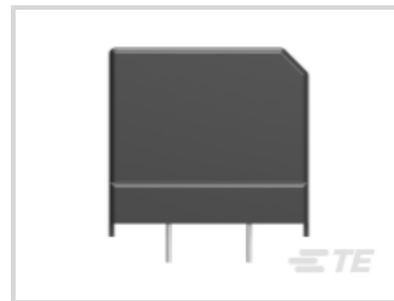

Operating Voltage (Max): **300 VDC**

Current Rating (Max): **3 A**

Input Termination Type: **PCB Terminal**

Output Termination Type: **PCB Terminal**

Pollution Degree: **PD2**

All EMC / RFI Chokes RN Series (149)

Features

Product Type Features

Input Termination Type	PCB Terminal
Output Termination Type	PCB Terminal

Electrical Characteristics

Overvoltage Category	II
Operating Voltage (Max)	300 VDC
Current Rating (Max)	3 A

Body Features

Product Weight	28 g[.99 oz]
Product Orientation	Vertical

Mechanical Attachment

Product Mount Type	Board Mount

Dimensions

Product Width	31 mm[1.22 in]

Product Length	18 mm[.7 in]
Product Height	29.3 mm[1.15 in]

Usage Conditions

Operating Temperature Range	-40 – 100 °C[-40 – 212 °F]

Operation/Application

Cooling Method	Natural Convection

Industry Standards

Certified To	IEC/EN 60938-1, UL 1283
Pollution Degree	PD2
IP Rating	IP00
UL Flammability Rating	UL 94V-0

Product Compliance

For compliance documentation, visit the product page on TE.com>

EU RoHS Directive 2011/65/EU	Compliant
EU ELV Directive 2000/53/EC	Compliant
China RoHS 2 Directive MIIT Order No 32, 2016	有害物质含量符合标准要求 No Restricted Substance(s) Above Threshold
EU REACH Regulation (EC) No. 1907/2006	Current ECHA Candidate List: JUNE 2025 (250) Candidate List Declared Against: JUNE 2025 (250) Does not contain REACH SVHC
Halogen Content	Not Yet Reviewed for halogen content
Solder Process Capability	Not reviewed for solder process capability

Product Compliance Disclaimer

This information is provided based on reasonable inquiry of our suppliers and represents our current actual knowledge based on the information they provided. This information is subject to change. The part numbers that TE has identified as EU RoHS compliant have a maximum concentration of 0.1% by weight in homogenous materials for lead, hexavalent chromium, mercury, PBB, PBDE, DBP, BBP, DEHP, DIBP, and 0.01% for cadmium, or qualify for an exemption to these limits as defined in the Annexes of Directive 2011/65/EU (RoHS2). Finished electrical and electronic equipment products will be CE marked as required by Directive 2011/65/EU. Components may not be CE marked.Additionally, the part numbers that TE has identified as EU ELV compliant have a maximum concentration of 0.1% by weight in homogenous materials for lead, hexavalent chromium, and mercury, and 0.01% for cadmium, or qualify for an exemption to these limits as defined in the Annexes of Directive 2000/53/EC (ELV). Regarding the REACH Regulations, TE's information on SVHC in articles for this part number is still based on the European Chemical Agency (ECHA) 'Guidance on requirements for substances in articles'(Version: 2, April 2011), applying the 0.1% weight on weight concentration threshold at the finished product level. TE is aware of the European Court of Justice ruling of September 10th, 2015 also known as O5A (Once An Article Always An Article) stating that, in case of 'complex object', the threshold for a SVHC must be applied to both the

product as a whole and simultaneously to each of the articles forming part of its composition. TE has evaluated this ruling based on the new ECHA "Guidance on requirements for substances in articles" (June 2017, version 4.0) and will be updating its statements accordingly.

Compatible Parts

TE Part # CAT-PA3-RN
EMC / RFI Chokes RN Series

Also in the Series | Schaffner RN-Series

EMC Chokes(149)

Customers Also Bought

TE Part #826942-6
6P MOD2 STIFT LEI

TE Part #1614349-9
RN 0603 10K 0.1% 10PPM CUT LENGTH

TE Part #2-1624113-9
3650 0805 10nH 5% 2K RL

TE Part #1676308-2
RN 0805 340R 0.1% 10PPM 1KRL

TE Part #7-1676481-8
CPF 0603 12K 0.1% 25PPM 1K RL

TE Part #1879217-2
CPF 0603 150K 0.1% 25PPM 1K RL

TE Part #3-1879223-0
CPF 0603 475R 0.1% 25PPM 1K RL

TE Part #8-1879224-6
CPF 0603 27K4 0.1% 25PPM 1K RL

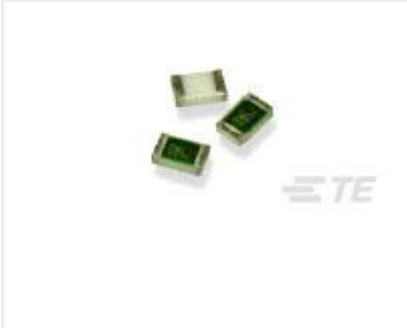

TE Part #7-1879225-6
CPF 0603 274K 0.1% 25PPM 1K RL

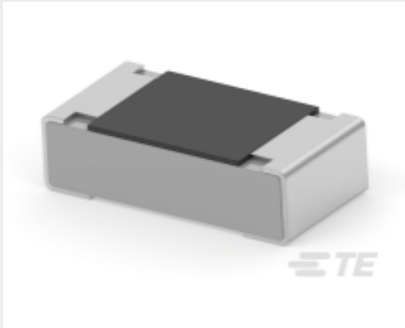

TE Part #3-2176340-1
CRGCQ 0603 100K 5%

Documents

CAD Files

Customer View Model
ENG_CVM_CVM_816568-SF_B.2d_dxf.zip
English

Customer View Model
ENG_CVM_CVM_816568-SF_B.3d_stp.zip
English

3D PDF
3D

Customer View Model
ENG_CVM_CVM_816568-SF_B.3d_igs.zip
English

By downloading the CAD file I accept and agree to the Terms and Conditions of use.

Datasheets & Catalog Pages

RFI Chokes RN series
English

Agency Approvals

VDE Certificate
English