QHL150 Series

DC-DC Converter

XP Power

150 Watts

- 180 - 425VDC Input Range
- Regulated Single Output
- Industry Standard Quarter Brick
- 3kVAC Isolation
- Output Trim -20% to +10%
- Remote On/Off
- Overtemperature Protection
- -40°C to +100°C Operation
- 3 Year Warranty

The QHL150 series offers a compact 150W DC-DC solution in an industry standard quarter brick package. This series of modules enables effective construction of distributed power architectures from AC front ends, PFC front ends and battery systems.

Dimensions:

QHL150:
2.28 x 1.45 x 0.5" (57.9 x 36.8 x 12.7 mm)

Models & Ratings

Input Voltage	Output Voltage	Output Current	Input Current[1]		Ripple & noise pk-pk	Efficiency at Vin Nominal with full load	Maximum Capacitive Load	Model Number
			No Load	Full Load at Vin Nominal				
300V (180-425V)	5V	30.0A	10mA	0.58A	100mV	86%	10000µF	QHL150300S05
	12V	12.5A		0.56A	150mV	89%	8800µF	QHL150300S12
	15V	10.0A		0.56A	150mV	89%	8800µF	QHL150300S15
	24V	6.30A		0.57A	100mV	88%	3300µF	QHL150300S24
	28V	5.40A		0.57A	100mV	89%	3300µF	QHL150300S28
	48V	3.20A		0.57A	200mV	89%	1000µF	QHL150300S48

Notes

1. Measured at 300V nominal input.
2. Peak to peak measured at 20MHz bandwidth and i) 10µF al. and 1µF ceramic capacitor across output for 48V model
ii) 10µF tantalum and 1µF ceramic capacitor across output for all other models
3. Recommended input capacitance of 150µF required to reduce input ripple voltage at -40°C operation or 68µF for operation to -20°C. See application notes.
4. Optional negative logic add suffix -N for module enable/disable function. See output table.

Mechanical Details

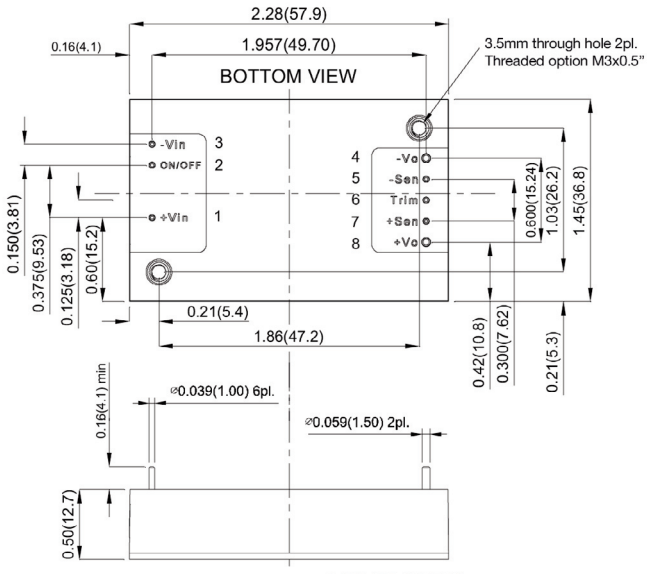

Pin Connections	
Pin	Function
1	+Vin
2	Remote On/Off
3	-Vin
4	-Vout
5	-Sense
6	Trim
7	+Sense
8	+Vout

Notes

1. All dimensions are in inches (mm)
2. Weight: 0.143 lbs (65.0 g) approx.
3. Tolerance: x.xx = ±0.02 (x.x = ±0.5)
x.xxx = ±0.01 (x.xx = ±0.25)
4. Optional M3 x 0.5 threaded baseplate fixing add suffix -T.

Input

Characteristic	Minimum	Typical	Maximum	Units	Notes & Conditions
Input Voltage Range	180		425	VDC	
Input Current			1	A	180VDC input, 100% load
Undervoltage Lockout		170		VDC	On
		160			Off
Lockout Hysteresis		10		VDC	
Input Transient Voltage			500	VDC	For 100ms
Idle Current		10		mA	No load
Standby Mode		3		mA	When module inhibited
Inrush Current			0.1	A^2s	ETS300 132-2
Recommended Input Fuse		2		A	Time delay type, see application note
Input Reflected Ripple Current		30		mA pk-pk	Through 12µH inductor

Output

Characteristic	Minimum	Typical	Maximum	Units	Notes & Conditions
Output Voltage	5		48	VDC	See Models and Ratings table
Output Trim	-20		+10	%	See Application Note
Initial Set Accuracy			±1	%	At full load
Minimum Load	0			%	No minimum load required
Line Regulation			±0.2	%	From minimum to maximum input at full load
Load Regulation			±0.2	%	From 0% to full load
Transient Response			±5.0	%	Maximum deviation, recovering to less than 1% in 250µs for 25% step load change.
Start Up Time		300		ms	
Output Voltage Rise Time		30		ms	
Ripple & Noise				mV pk-pk	See models and ratings table
Overload Protection	110	125	160	%	
Short Circuit Protection					Continuous hiccup mode, with auto recovery
Maximum Capacitive Load					See Models and Ratings table.
Temperature Coefficient			±0.02	%/°C	
Overvoltage Protection	115	125	140	%	Of nominal output voltage.
Remote On/Off	Output is on if remote on/off (pin 2) is open or high (3.5-75VDC) with respect to pin 4 or -Vin Output turns off if remote on/off (pin 2) is low (<1.2VDC max) with respect to pin 4 or -Vin Default positive logic, for negative logic add suffix -N				

General

Characteristic	Minimum	Typical	Maximum	Units	Notes & Conditions
Efficiency		88		%	See Models and Ratings table
Isolation: Input to Output	3000			VAC	60s reinforced
Isolation: Input to Case	2500			VAC	60s basic
Isolation: Output to Case	500			VAC	60s functional
Switching Frequency	330	360	390	kHz	Fixed PWM
Isolation Resistance	100			MΩ	
Case Material	Plastic (DAP) with aluminium base plate. UL94V-0 rated. Meets EN45545-2				
Potting Material	Epoxy UL94V-0				
Pin Material	Copper with nickel and matte tin plate				
Solder Profile			260	°C	With iron 450°C, 5s max. 1.5mm from case 10s max
Water Wash	Use deionized water, do not soak. Dry thoroughly				
Power Density			90	W/in^3	
Mean Time Between Failure	1000			kHrs	48V models, MIL-HDBK-217F, +25°C GB
	800				Others, MIL-HDBK-217F, +25°C GB
Weight		0.1943 (65.0)		lb (g)	

Environmental

Characteristic	Minimum	Typical	Maximum	Units	Notes & Conditions
Operating Base Plate Temperature	-40		+100	°C	
Storage Temperature	-55		+125	°C	
Thermal Protection		+105		°C	Auto recovery at 95 °C typical
Humidity			95	%RH	Non-condensing
Cooling					Baseplate-cooled
Altitude			2000	m	Operating. Storage to 12000 m
Shock and Vibration					EN61373/MIL-STD-810F

Safety Approvals

Agency	Standard	Notes & Conditions
UL	UL/cUL60950-1	ITE
EN	EN62368-1	
CE	Meets all applicable directives	
UKCA	Meets all applicable legislation	

EMC: Emissions

Phenomenon	Standard	Test Level	Notes & Conditions
Conducted	EN55032	Class A	See Application Notes
Radiated	EN55032	Class A	See Application Notes

EMC: Immunity

Phenomenon	Standard	Test Level	Criteria	Notes & Conditions
ESD Immunity	EN61000-4-2	±6kV/±8kV	A	Contact Discharge/Air Discharge
Radiated Immunity	EN61000-4-3	20v/m	A	
EFT/Burst	EN61000-4-4	±2kV	A	See application note
Surge	EN61000-4-5	±2kV	A	See application note
Conducted Immunity	EN61000-4-6	10Vrms	A	
Magnetic Fields	EN61000-4-8	3A/m	A	

Mechanical Details

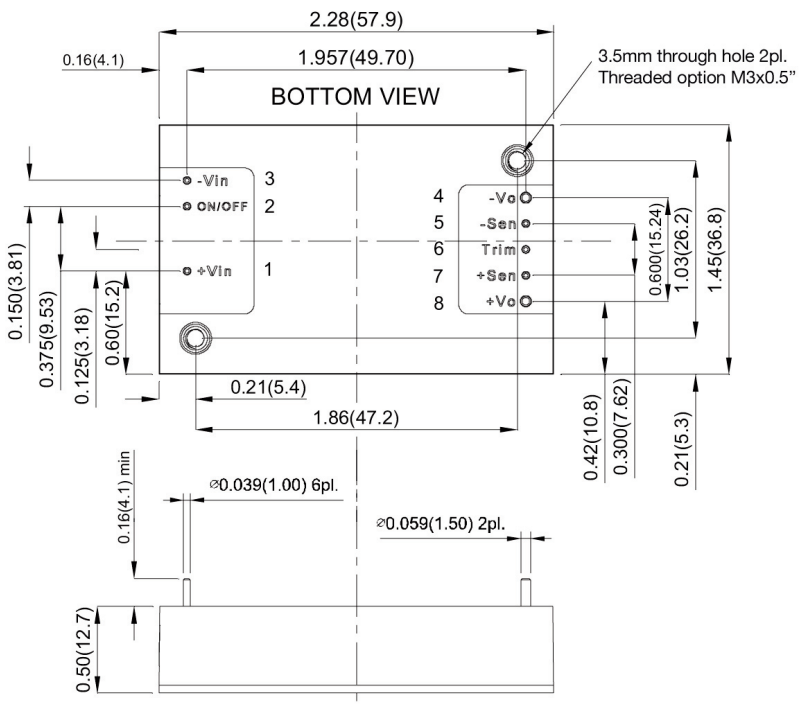

Pin Connections	
Pin	Function
1	+Vin
2	Remote On/Off
3	-Vin
4	-Vout
5	-Sense
6	Trim
7	+Sense
8	+Vout

Notes

1. All dimensions are in inches (mm)
2. Weight: 0.143 lbs (65.0 g) approx.
3. Tolerance: x.xx = ±0.02 (x.x = ±0.5)
   x.xxx = ±0.01 (x.xx = ±0.25)
4. Optional M3 x 0.5 threaded baseplate fixing add suffix -T.

Application Notes

Input Fusing and Safety Considerations

The QHL150 series converters have no internal fuse. For safety and system protection, always use an input line fuse. A 2.0A time delay fuse is recommended. It is also recommended the circuit has a transient voltage suppressor diode (TVS) across the input terminals to protect the unit against surges, spikes and input reverse voltage (as shown). A suitable part is SMCJ440A.

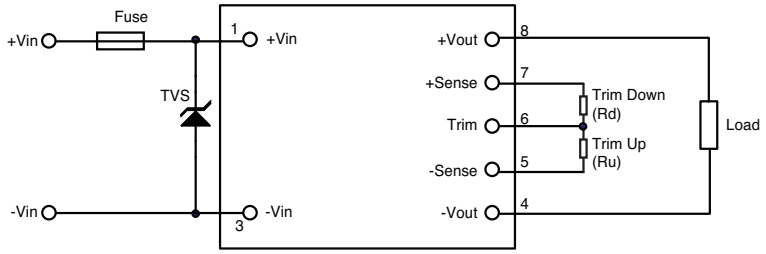

Suggested Basic Layout

Output Voltage Sensing

The module will automatically trim the output voltage via the sense pins to the default values either locally or at the load. If not required, the sense pins should be connected locally as indicated in the example EMC circuit.

Output Voltage Adjustment

The Trim input permits the user to adjust the output voltage up by 10% or down by 20%. This is accomplished by connecting an external resistor between the Trim pin and -sense to trim up, or between the trim pin and +sense to trim down.

To Trim Down (Rd)

Trim Down %	5V	12V	15V	24V	28V	48V
	Rd KΩ					
1	111.9	687.3	952	1704	2067	3295
2	53.88	327.1	452	807.8	987.5	1588
3	34.55	207	285.3	509.2	627.8	1020
4	24.88	147	202	359.9	447.9	735.1
5	19.08	111	152	270.3	340	564.5
6	15.21	86.97	118.6	210.6	268	450.8
7	12.45	69.82	94.85	168	216.6	369.5
8	10.38	56.95	77	136	178.1	308.6
9	8.77	46.95	63.11	111.1	148.1	261.2
10	7.48	38.94	52	91.17	124.1	223.3
11	6.425	32.39	42.9	74.88	104.5	192.2
12	5.547	26.93	35.33	61.31	88.17	166.4
13	4.803	22.32	28.92	49.82	74.33	144.5
14	4.166	18.36	23.42	39.98	62.47	125.8
15	3.613	14.93	18.66	31.44	52.19	109.5
16	3.13	11.93	14.5	23.98	43.2	95.28
17	2.704	9.277	10.82	17.39	35.26	82.74
18	2.324	6.923	7.556	11.54	28.21	71.58
19	1.985	4.817	4.632	6.298	21.9	61.61
20	1.68	2.921	2	1.583	16.22	52.63

To Trim Up (Ru)

Trim Up %	5V	12V	15V	24V	28V	48V
	Ru KΩ					
1	114.2	154.1	160.7	164.1	167.1	147.4
2	56.2	74.95	77.01	78.65	80.73	71.3
3	36.87	48.56	49.1	50.18	51.93	45.93
4	27.2	35.37	35.15	35.95	37.52	33.25
5	21.4	27.46	26.78	27.41	28.88	25.64
6	17.53	22.18	21.19	21.71	23.12	20.56
7	14.77	18.41	17.21	17.65	19.01	16.94
8	12.7	15.58	14.22	14.6	15.92	14.22
9	11.09	13.38	11.89	12.22	13.52	12.11
10	9.8	11.63	10.03	10.33	11.6	10.42

Application Notes

Thermal Resistance Information

Airflow Derating Graph – Without Heatsink

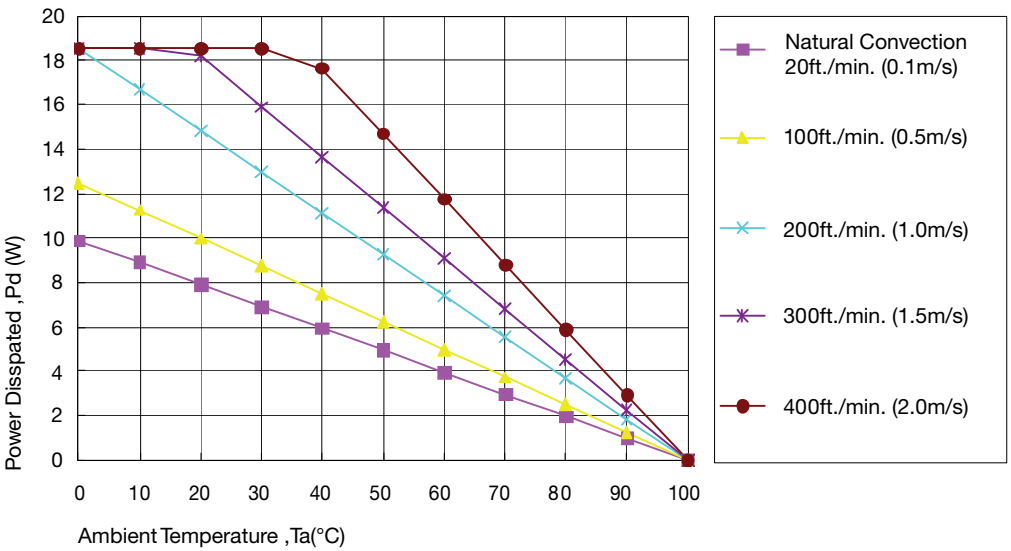

Air Flow Rate	Typical Rca
Natural Convection 20ft/min (0.1m/s)	10.1°C/W
100ft/min (0.5m/s)	8.0°C/W
200ft/min (1.0m/s)	5.4°C/W
300ft/min (1.5m/s)	4.4°C/W
400ft/min (2.0m/s)	3.4°C/W

Example (Without Heatsink)

To determine the minimum airflow necessary for a QHL150300S12 operating at an input voltage of 300V, an output current of 12.5A, and a maximum ambient temperature of 40°C:

Determine Power dissipation (Pd): $Pd = Pi - Po = Po(1-\eta)/\eta$,

$Pd = 12V \times 12.5A \times (1-0.89) / 0.89 = 18.54$

Where Pi = Input power, Po = Output Power and η = Efficiency

Determine airflow from airflow derating graph using data points for Pd = 18.54W and Ta = 40°C

Minimum airflow = 400ft./min.

To check that the maximum case temp of 100°C is not exceeded:
Maximum temperature rise is
$\Delta T = Pd \times Rca = 18.54 \times 3.40 = 63.4°C$.
Maximum case temperature is
$Tc = Ta + \Delta T = 40 + 63 = 103°C < 100°C$.
Where: Rca is the thermal resistance from case to ambient environment. Ta is ambient temperature and Tc is case temperature.

Example Efficiency Curve

Example based on QHL150300S12

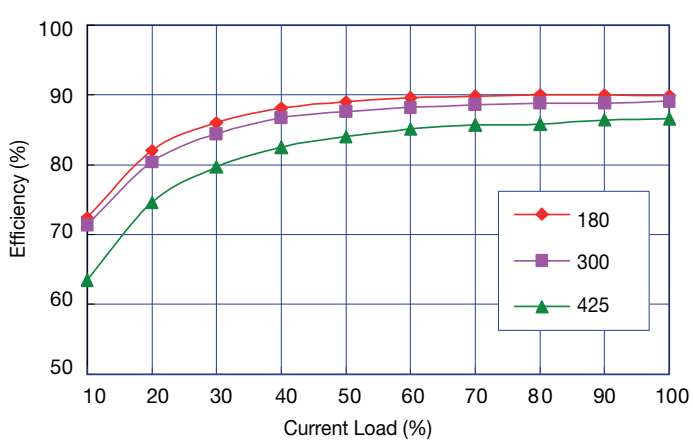

Application Notes

Conducted and Radiated Emissions – Class A

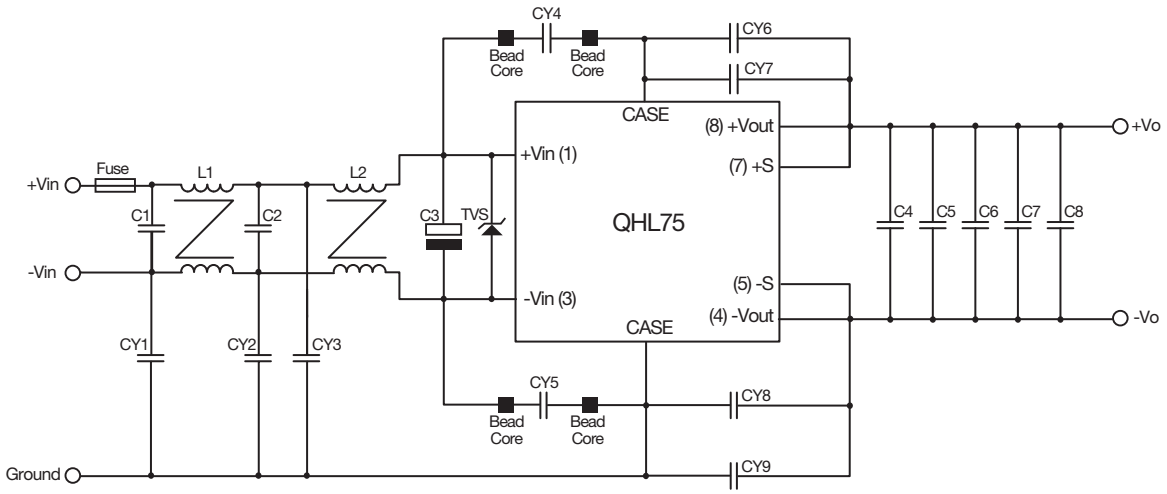

Notes

Part Number	Value
C1	0.47uF/520V Polyester Film Capacitor
C2	0.1uF/630V 1812 X7R
C3	Recommended 150µF, 450V aluminium capacitor for operation to -40°C type Nippon Chemi-Con KXG Series or equivalent. The value of C3 can be reduced to 68µF for operation to -20°C.
C4,C5	4.7uF/100V X7R 1812
C6,C7,C8	0.47uF/250V X7R 1210
CY1,CY2	100pF CD Type
CY3	1000pF CD Type
CY4,CY5	1500pF CD Type
CY6,CY7,CY8,CY9	4700pF CD Type
L1, L2	5mH Common Choke
Bead Core	Bead Core 2.8*1.7*2 SM
Fuse	2A time delay
TVS	$440V_R$ I_{PP} 2.1A example, SMCJ440A