PRASA1-16F-BB0CW ✔ ACTIVE

ALCOSWITCH

TE Internal #: 1-1571076-1

High Power Rocker Switch, Panel Mount, 13 x 19.2 mm [.514 x .754 in] Panel Cutout, Silver Contact Plating

View on TE.com >

Switches > Rocker Switches

Switch Type: **High Power Rocker Switch**

Product Mount Type: **Panel Mount**

Indicator/Imprint Legend: **O I**

Panel Cutout Size: **13 x 19.2 mm [.514 x .754 in]**

Switch Contact Plating Material: **Silver**

Features

Product Type Features

Switch Type	High Power Rocker Switch
Actuator Type	Top
Actuator Style	Rocker
Switch Connection Type	Quick Connect Terminal

Configuration Features

Indicator/Imprint Legend	O I
Panel Cutout Size	13 x 19.2 mm[.514 x .754 in]
Configuration (Pole-Throw)	Single Pole - Single Throw
Operating Function	On Off

Electrical Characteristics

Contact Current Rating	16 A
Operating Voltage Range	125 VAC

Body Features

Product Orientation	Vertical

Actuator Color	Black

Contact Features

Terminal Tab Width	4.75 mm[.187 in]
Switch Contact Plating Material	Silver

Mechanical Attachment

Product Mount Type	Panel Mount

Housing Features

Process Sealed	No

Industry Standards

Compatible With Agency/Standards Products	VDE
Compatible With Approved Standards Products	UL E46765

Product Compliance

For compliance documentation, visit the product page on TE.com>

EU RoHS Directive 2011/65/EU	Compliant
EU ELV Directive 2000/53/EC	Compliant
China RoHS 2 Directive MIIT Order No 32, 2016	有害物质含量符合标准要求 No Restricted Substance(s) Above Threshold
EU REACH Regulation (EC) No. 1907/2006	Current ECHA Candidate List: JUNE 2025 (250) Candidate List Declared Against: JAN 2025 (247) Does not contain REACH SVHC
Halogen Content	Low Halogen - Br, Cl, F < 900 ppm per homogenous material. Also BFR/CFR/PVC Free
Solder Process Capability	Not applicable for solder process capability

Product Compliance Disclaimer

This information is provided based on reasonable inquiry of our suppliers and represents our current actual knowledge based on the information they provided. This information is subject to change. The part numbers that TE has identified as EU RoHS compliant have a maximum concentration of 0.1% by weight in homogenous materials for lead, hexavalent chromium, mercury, PBB, PBDE, DBP, BBP, DEHP, DIBP, and 0.01% for cadmium, or qualify for an exemption to these limits as defined in the Annexes of Directive 2011/65/EU (RoHS2). Finished electrical and electronic equipment products will be CE marked as required by Directive 2011/65/EU. Components may not be CE marked. Additionally, the part numbers that TE has identified as EU ELV compliant have a maximum concentration of 0.1% by weight in homogenous materials for lead, hexavalent chromium, and mercury, and 0.01% for cadmium, or qualify for an exemption to these limits as defined in the Annexes of Directive 2000/53/EC (ELV). Regarding the REACH Regulation, the information TE provides on SVHC in articles for this part number is based on the latest European Chemicals Agency (ECHA) 'Guidance on requirements for substances in articles' posted at this URL: https://echa.europa.eu/guidance-documents/guidance-on-reach

Compatible Parts

TE Part # 1-1571079-4
PRASD4-16F-BB0FW=POWER ROCKER

TE Part # 1-1571079-6
PRASD5-16F-BB0KW=POWER ROCKER

TE Part # 1-1571076-4
PRASA1-16L-BB0CW=POWER ROCKER

TE Part # 1571079-4
PRASD1-16F-BB000=POWER ROCKER

TE Part # 1571083-2
PRASC1-16F-BBR00=POWER ROCKER

TE Part # 1571076-9
PRASA1-16F-BB000=POWER ROCKER

TE Part # 1571078-4
PRASB2-16F-BBR00=POWER ROCKER

TE Part # 1571079-9
PRASD3-16F-BB0GW=POWER ROCKER

TE Part # 1-1571076-2
PRASA1-16L-BB000=POWER ROCKER

TE Part # 1571079-7
PRASD3-16F-BB000=POWER ROCKER

TE Part # 1-1571076-0
PRASA1-16F-BB0BW=POWER ROCKER

Customers Also Bought

TE Part #CONSMA002-L-G
SMA Jack 50 Ohm PCB Through Hole

TE Part #CSE-SMBM-152-SMBM
SMB to SMB 152mm RG316

TE Part #2-215079-0
MICRO-MATCH FOB.20P

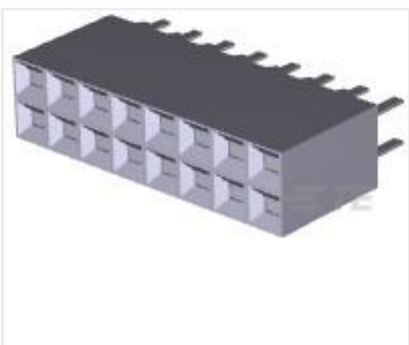

TE Part #5-534998-8
16 MODIV VRT DR CE 100/125

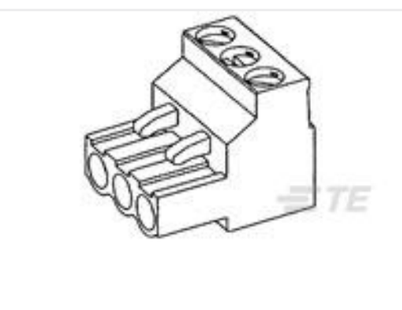

TE Part #796634-2
2 POS 5.08MM R/A PLUG,TRM BLK

TE Part #796634-3
3 POS 5.08MM R/A PLUG,TRM BLK

TE Part #1622837-1
CRG0603 1% 120R

TE Part #1-1879499-4
CRGH2010 5% 3R6 1W

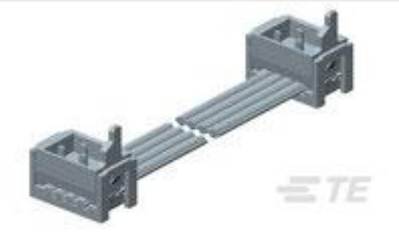

TE Part #2205076-3
CA MICRO-MATCH MOW-MOW 20POS

TE Part #ES4835-000
ECTI-5112-IT02

Documents

Product Drawings

PRASA1-16F-BB0CW=POWER ROCKER

English

CAD Files

Customer View Model

ENG_CVM_CVM_1-1571076-1_N.3d_igs.zip

English

Customer View Model

ENG_CVM_CVM_1-1571076-1_N.3d_stp.zip

English

Customer View Model

ENG_CVM_CVM_1-1571076-1_N.2d_dxf.zip

English

3D PDF

3D

By downloading the CAD file I accept and agree to the Terms and Conditions of use.

Datasheets & Catalog Pages

SWITCHES_CORE_PROGRAM_CATALOG

English

1654742_HOUSEHOLD_APPLIANCES_RAST5

English

8-1773450-9_SWITCHES_CATALOG_SECTION_F_ROCKER/PADDLE_SWITCHES

English