TAOGLAS®

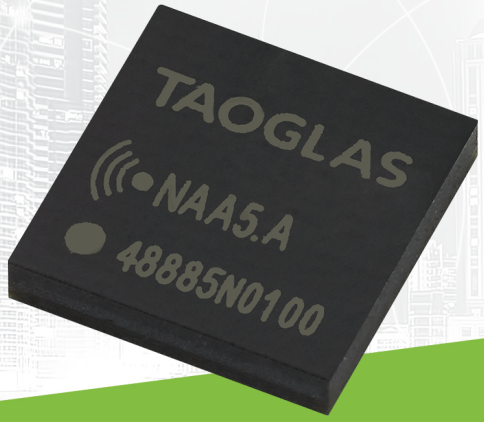

Datasheet

NFC Chip Antenna

Part No: NAA5.A
(Long Part Number: NCA5S2210)

Description:

Taoglas Active NFC Chip Antenna

Features:

Includes Integrated Active Boost Transmission
Tiny footprint allows system PCB size reduction
Low power consumption
Performs efficiently, even in shielded environments
Dimensions: 5 x 5 x 1mm
RoHS & Reach Compliant

1.	Introduction	3
2.	Specifications	4
3.	Antenna Package & Dimensions (Unit: mm)	6
4.	Application Circuit Diagram	7
5.	System Block Diagram	8
6.	Reflow Solder Mechanical Integration	9
7.	Mechanical Drawing	10
8.	Application Note	12
9.	Ground Plane Clearance Considerations	13
10.	EVB Test Setup	14
11.	Ground Plane Clearance Analysis	15
12.	NAA5.A with Various Ground Plane Sizes	18
13.	Summary of Integration Considerations	21
	Changelog	22

Taoglas makes no warranties based on the accuracy or completeness of the contents of this document and reserves the right to make changes to specifications and product descriptions at any time without notice. Taoglas reserves all rights to this document and the information contained herein.

Reproduction, use or disclosure to third parties without express permission is strictly prohibited.

Copyright © Taoglas Ltd.

Ireland ISO 9001: 2015 Certified

Taiwan ISO 9001: 2015 Certified

1. Introduction

The Taoglas NAA5.A is an active NFC chip antenna, ideal for NFC Tag services that require active boost transmission technology. With a tiny form factor 5*5*1mm the NAA5.A is the ideal antenna for NFC applications where size can be a limitation. The product integrates all components including an NFC front end, embedded antenna and it's matching components. The NAA5.A has a max read distance of 50mm and consumes battery power due to being an active antenna.

It significantly eases the design effort and reduces the PCB footprint of system, thus allowing NFC functionality in an ultra-small size. The footprint size can be as low as 7*7mm as at least 2mm of clearance from other elements to the chip is required. The NAA5.A is a revoloutionary product created to match the performance of the current Taoglas FXR series but in an almost 3 times smaller form factor.

Typical Use-Case Applications include:

:: Smartphones
:: Access control or other closed loop application on smart devices
:: Wearable Devices
:: Automotive keyless entry
:: Payment Terminals

The integrated NFC front end and its antenna provide the active transmission and boosts the response signal to the NFC reader/initiator while improving the receiving sensitivity, in order to realize the excellent contactless performance on this device. Performance can be further enhanced by use of Taoglas's FXR series discrete NFC antennas.

This innovative solution provides an All-in-One application system together with NFC functions and solves proximity communication problems typical of an ultra-compact NFC device. Compared to conventional passive NFC tags, the Taoglas NAA5.A solution has a much less system BOM cost, stand-by power consumption and smaller PCB footrint. Taoglas NAA5.A offers reliable NFC tag performance even when the mechanical construction of the host device partially shields the radio signals.

For more information or help on how to integrate the antenna into your device, please contact you regional Taoglas Customer Support team.

2. Specifications

Electrical Specifications – Operating Conditions				
Symbol	Parameter	Min	Max	Unit
VCC	Positive Supply Voltage	2.7	3.6	V
GPVCC	GPIO Supply Voltage	2.7	3.6	V
SCVCC	ISO7816 Supply Voltage	2.7	3.6	V
VSS	Negative Supply Voltage	0	0	V
T_{AMB}	Junction Temperature	-25	85	°C
T_{STRG}	Storage Temperature	-40	125	°C

System Specifications – VCC = 3C, Temperature @ 25°C				
Symbol	Parameter	Typ.	Max	Unit
ICCL	Contactless Operating Mode	30	50	mA
ICPD	Contactless off Mode (Standby Mode)	15		uA

Environmental	
Moisture Sensitivity Level (MSL)	3 (168 Hours)

NAA5.A (78CAFX Boosted Antenna)			
Pin	Pin Name	Pin Type	Description
1	(RES)	N.A.	Reserved for internal purpose only
2	(RES)	N.A.	Reserved for internal purpose only
3	(RES)	N.A.	Reserved for internal purpose only
4	(RES)	N.A.	Reserved for internal purpose only
5	(RES)	N.A.	Reserved for internal purpose only
6	(RES)	N.A.	Reserved for internal purpose only
7	(RES)	N.A.	Reserved for internal purpose only
8	(RES)	N.A.	Reserved for internal purpose only
9	(RES)	N.A.	Reserved for internal purpose only
10	(RES)	N.A.	Reserved for internal purpose only
11	(RES)	N.A.	Reserved for internal purpose only
12	(RES)	N.A.	Reserved for internal purpose only
13	GND	Ground	Ground
14	GND	Ground	Ground
15	SCVCC	Internal Supply Pad	SE _VCC
16	(RES)	N.A.	Reserved for internal purpose only
17	(RES)	N.A.	Reserved for internal purpose only
18	(RES)	N.A.	Reserved for internal purpose only
19	VDDSE	Analog output	Internal positive supply for SE 3V
20	VCC	Supply Pad	External positive supply 3V
21	GPVCC	Internal Supply Pad	SE VCC
22	SCSLP	Digital Input	SE enable
23	(RES)	N.A.	Reserved for internal purpose only
24	(RES)	N.A.	Reserved for internal purpose only

3. Antenna Package & Dimensions (Unit: mm)

Top View

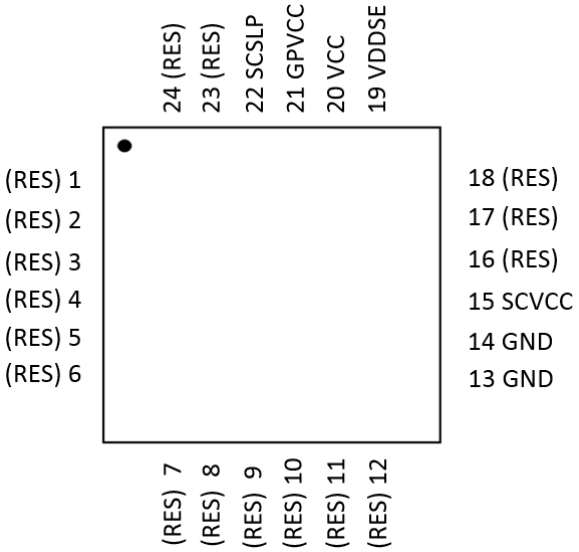

Bottom View

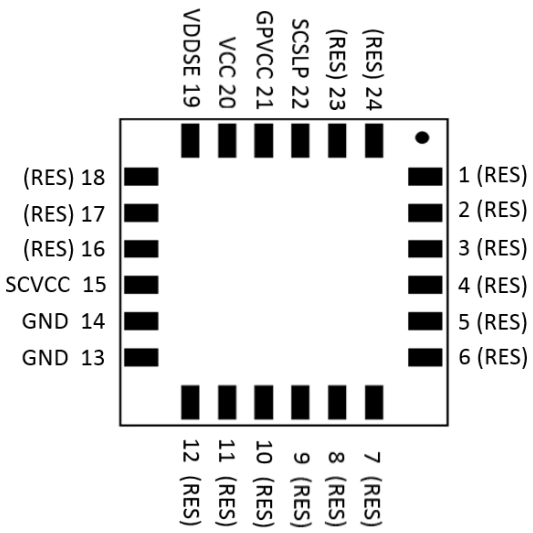

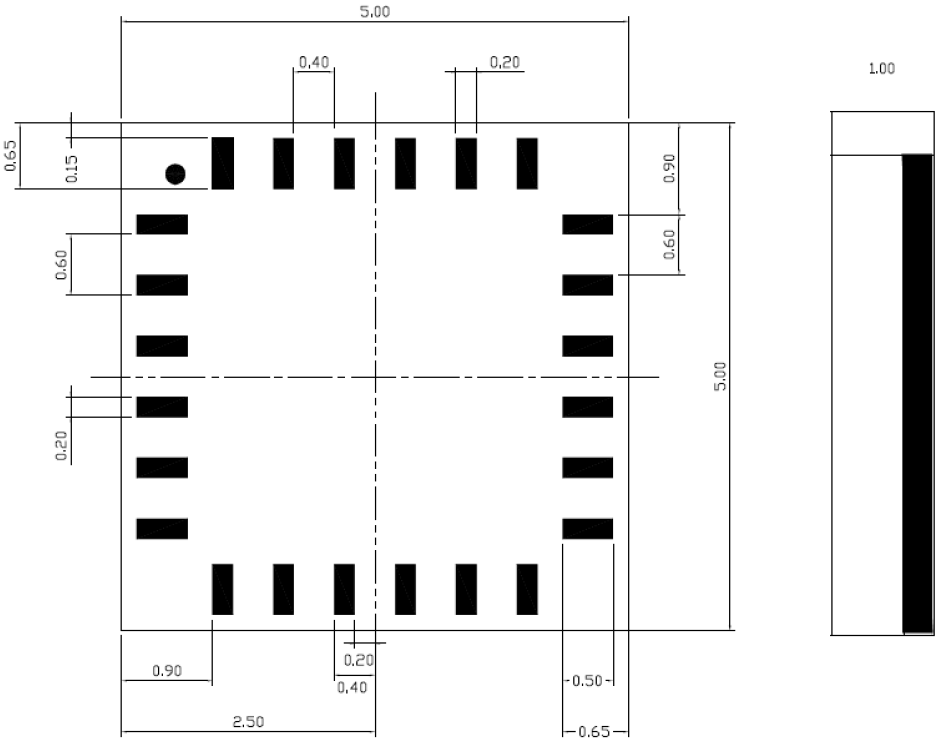

4. Application Circuit Diagram

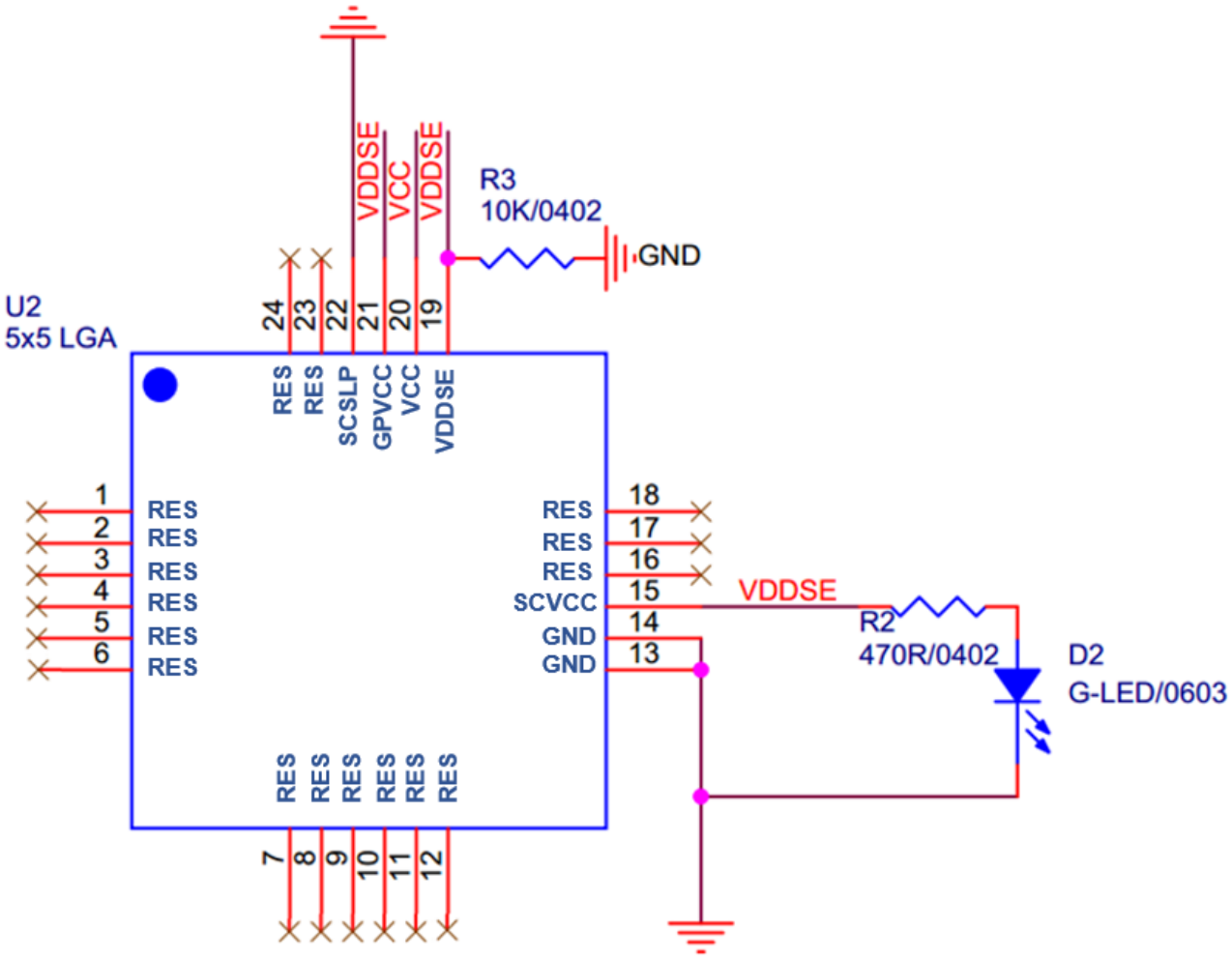

5. System Block Diagram

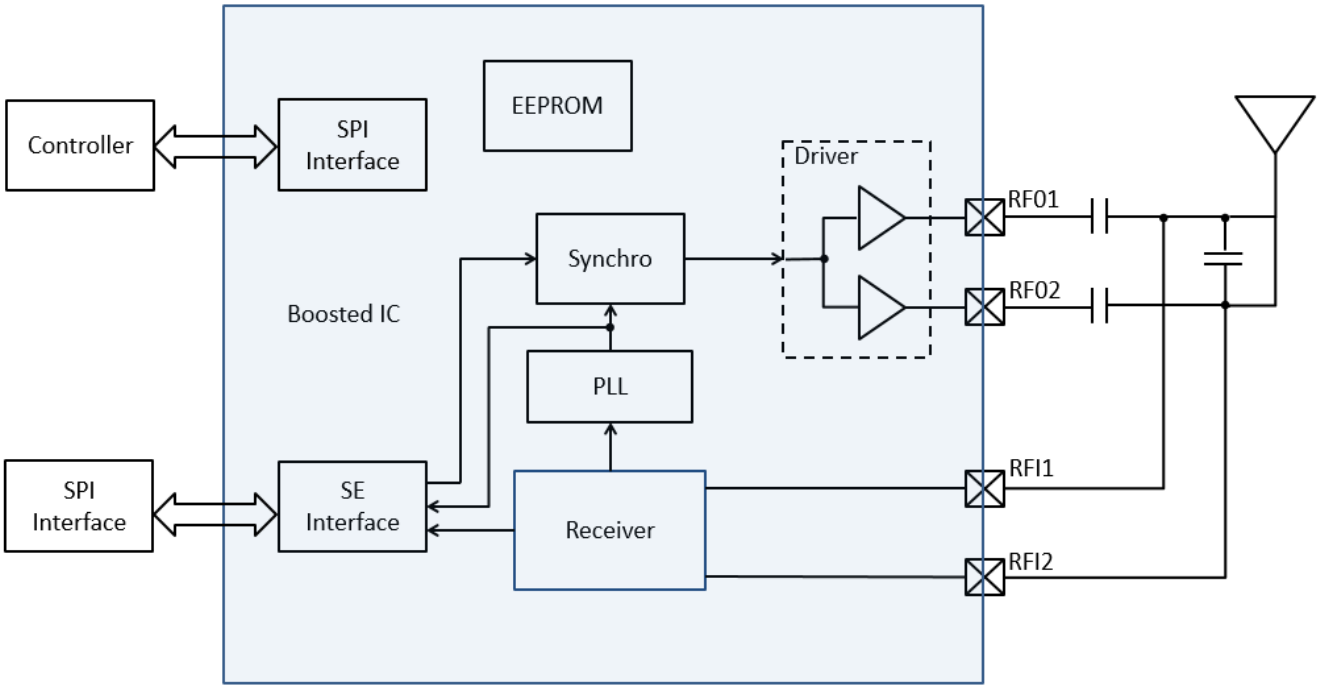

6. Reflow Solder Mechanical Integration

6.1 Manual Reflow Soldering

Manually, Reflow Soldering 250-260 degrees Celsius using a hot air gun. Ensure pin 1 is facing the correct pad on the PCB layout. The surface tension of the solder should pull the chip into place and align the chip during the reflow process and PCB solder mask will ensure that there are no shorts to adjacent pin leads. 30 seconds on each side is recommended so that the lead-free solder paste melts the Active NFC Chip into place.

6.2 Industrial Reflow Soldering

The Taoglas NAA5.A can be assembled following either Sn-Pb or Pb-Free assembly processes. The recommended soldering temperatures are as follows according to industry standard JEDEC (J-STD-001F) solder profile for ICs which will work well as usual once the component is placed correctly on pad layout using pickand place robot. Temperature profile is provided below.

Phase	Profile Features	Sn-Pb Assembly	Pb-Free Assembly (SnAgCu)
Ramp-Up	Avg Ramp-Up Rate (Tsmax to Tp)	3°C/second (max)	3°C/second (max)
Preheat	Temperature Min (Tsmin) Temperature Max (Tsmax) Time (tsmin to tsmax)	100°C 150°C 60-120 seconds	150°C 200°C 60-120 seconds
Reflow	Temperature (T_L) Total Time Above T_L b(t_L)	183°C 60-150 seconds	217°C 60-150 seconds
Peak	Temperature (Tp) Time (tp)	235°C 10-30 seconds	260°C 20-40 seconds
Ramp-Down	Rate	6°C/second (max)	6°C/second (max)
Time from 25°C to peak Temperature		6 minutes max	8 minutes max

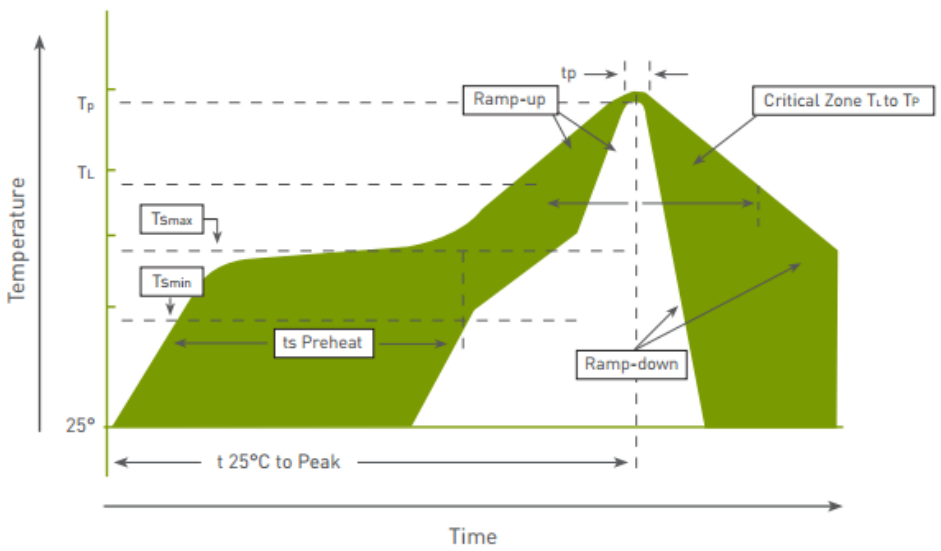

7. Mechanical Drawing

7.1 Antenna Drawing & Pin Definitions

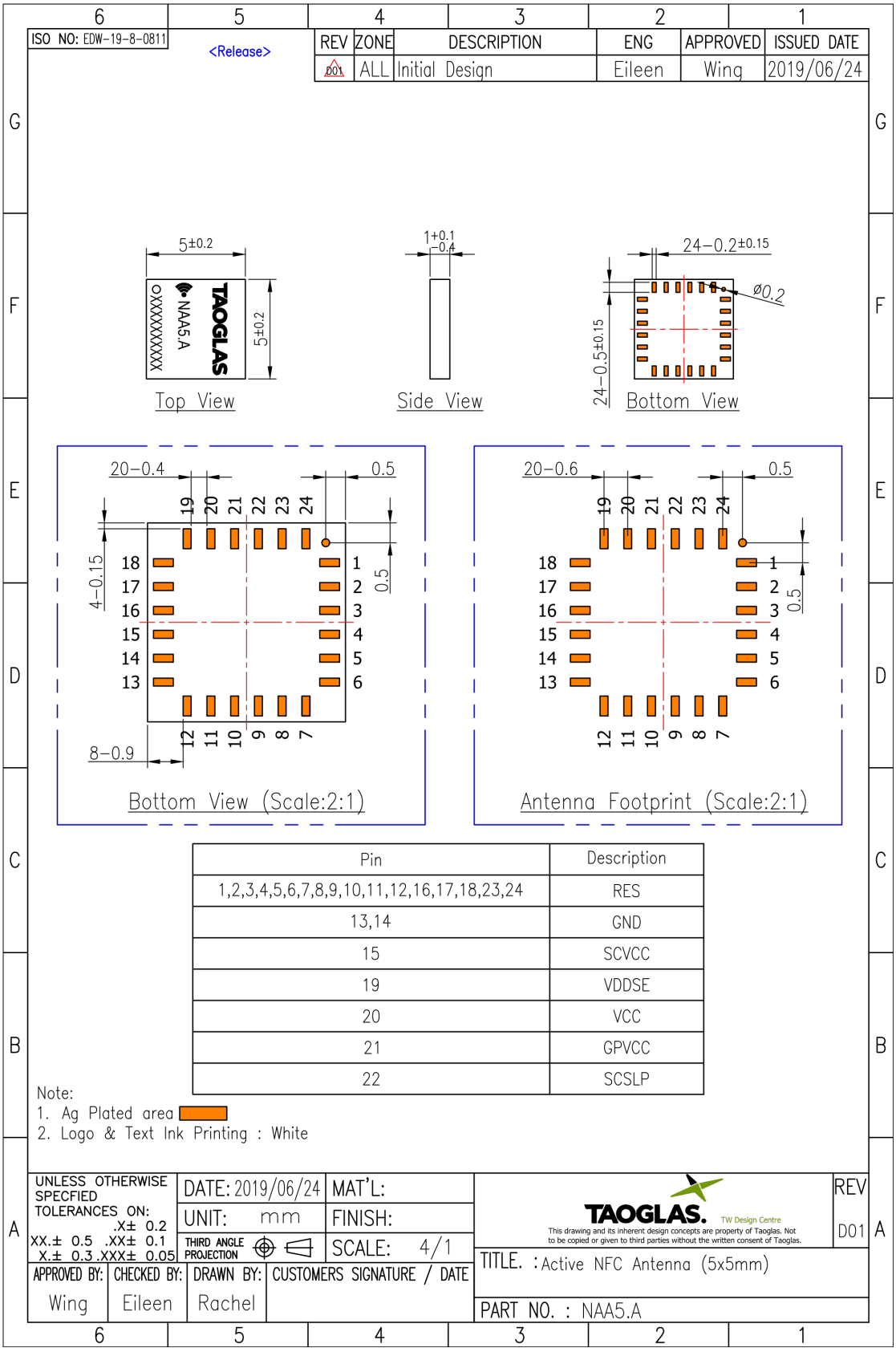

Pin	Description
1,2,3,4,5,6,7,8,9,10,11,12,16,17,18,23,24	RES
13,14	GND
15	SCVCC
19	VDDSE
20	VCC
21	GPVCC
22	SCSLP

7.2 Evaluation Board

ISO NO: EDW-19-8-1266	<Release>	REV	ZONE	DESCRIPTION	ENG	APPROVED	ISSUED DATE
		D01	ALL	Initial Design	Adam	Aaron	2019/08/26

(Front)

Silkscreen (White)		PTH
Au Plated	Soldermask (Glossy Black)	
Copper Lay (1oz)		
FR-4 (NP-140 0.7t)		

Cross Section (Back)

Notes
1. This drawing is strictly confidential.
2. All related parts and material must be RoHS compliance.
3. Dimensions marked on drawing (copper lay only) are important. Need to be included in QC check.
4. Open short test required for QC.
5. No burrs, spots or scratches.
6. Unmarked the traces on copper layer have tolerances of +/−0.15.
7. Unmarked the pads on plate layer have tolerances of ±0.30.

Top View

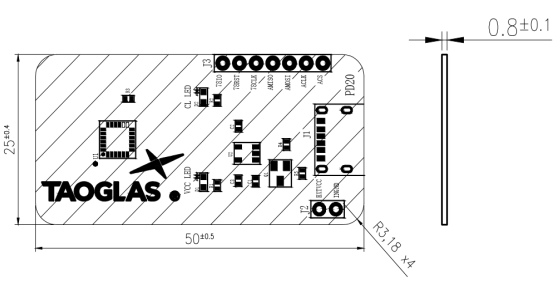

Ref. Des	Part Type / Spec.	Q'ty
U1	LC55S210/LC55C200	1
U2	LDS3985M33R/SOT23-5L	1
R1,R2	470R/0402	2
R4	1M/0402	1
C1	220nF/0402	1
C2	33nF/0402	1
C3	2.2uF/0402	1
D1	RED LED/0603	1
D2	GREEN LED/0603	1
Q1	NMOS STN2300A/SOT23	1
PCB	PD20(NAA5D.A)	1
J1	USB Type-C 6P female	1
J2	Pin Header 1x2 pin pitch:2.54mm	1

Silkscreen Lay And Soldermask Lay

Soldermask (Glossy Black) Silkscreen (White)

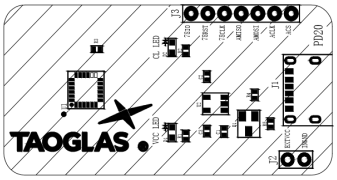

UNLESS OTHERWISE SPECFIED TOLERANCES ON: .X± 0.2 XX.± 0.5 .XX± 0.1 X.± 0.3 .XXX± 0.05	DATE: 2019/08/26	MAT'L:	TAOGLAS. TW Design Centre This drawing and its inherent design concepts are property of Taoglas. Not to be copied or given to third parties without the written consent of Taoglas.
	UNIT: mm	FINISH:	REV D01
	THIRD ANGLE PROJECTION	SCALE: 1/1	TITLE. : Active NFC Antenna (5x5mm) on Evaluation Board
APPROVED BY: Aaron / CHECKED BY: Aaron / DRAWN BY: Adam / CUSTOMERS SIGNATURE / DATE			PART NO. : NAA5D.A

8. Application Note

Typical NFC antennas are usually FPCB polymide on plastic housing or directly etched inductor coils on PCB, and whilst those work quite well they do occupy a lot of space increasing overall product volume. The traditional NFC antenna would almost always need clearance from metal objects to preserve the electromagnetic flux needed for operation and even if ferrite backed on metal to redirect flux they are still not always suitable for integration environments that demand very small form factor due to spatial constraints given the demand for cheaper lower form factor devices with additional wireless technology applications in same volume.

This Application Note describes functionality of the active Taoglas NAA5.A NFC antenna with spatial integration , ground plane size concerns, evaluation board LGA pin layout, reflow solder considerations and circuit schematics for completeness.

The NAA5.A offers a high level of design/ customer integration flexibility and thermal performance due to smaller form factor and very little thickness overall. The Taoglas NAA5.A NFC active chip antenna is an SMT antenna that comes with a total volume of 5x5x1mm^3 consisting of a LGA (Land grid array Package) evaluation board with 24 pins for interconnecting to PCB power, digital and RF planes. This design flexibility allows for a smaller, lighter and more reliable product for RF, power supply and digital interface on same PCB for multi-wireless protocol devices with cellular MIMO, Wi-Fi/BT or GNSS combined.

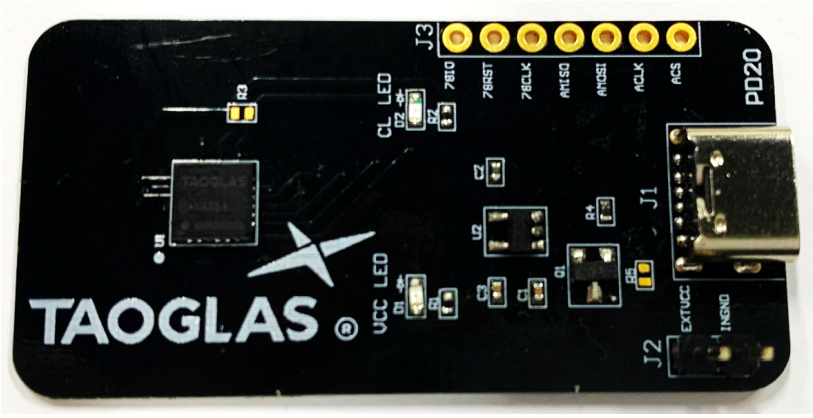

Figure 1 NAA5D.A NFC Evaluation Board

One major advantage of the Taoglas NAA5.A NFC chip is that it can be placed anywhere on the main PCB whilst only occupying 5x5x1mm volume and without requiring coaxial cable to connect to an IPEX/ Hirose receptacle on the PCB radio module as is the case with an FPCB NFC antenna. Also in contrast, the typical highest performing etched PCB requires at least 60x60mm PCB space for a comparable read range. Taoglas has completed a performance study of the 13.56 MHz NAA5.A Taoglas NFC chip antenna EVB (Evaluation Board) for various ground plane sizes and ground plane aperture clearances surrounding the NFC chip evaluation board.

9. Ground Plane Clearance Considerations

The antenna presented in the black block below is tested in the following scenarios for a 2 layer PCB, however the clearance distances in all 4 planar directions are also translated to a multi-layer PCB.

Test Scenario 1

NAA5.A tested with ground plane aperture clearance of 0mm 1mm, and 2mm at top and bottom of PCB.

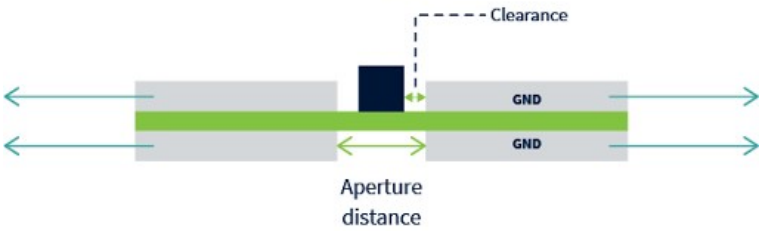

Figure 2 Test Scenario 1

Test Scenario 2

NAA5.A tested with ground plane aperture clearance of 0mm, 1mm and 2mm, continuous ground plane at bottom of PCB.

Figure 3 Test Scenario 2

Test Scenario 3

NAA5.A tested with different ground plane size based on Test Scenario 1 & 2 with ground plane extension in lateral sides indicated by blue arrows.

10. EVB Test Setup

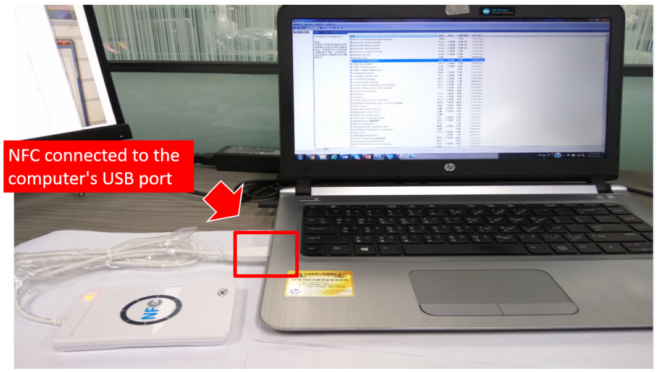

Figure 4 Reader setup for the NFC chip antenna

The reader is connected to the computer's USB port. When the reader is registered, the light on the reader is bright red, see Figure 4.

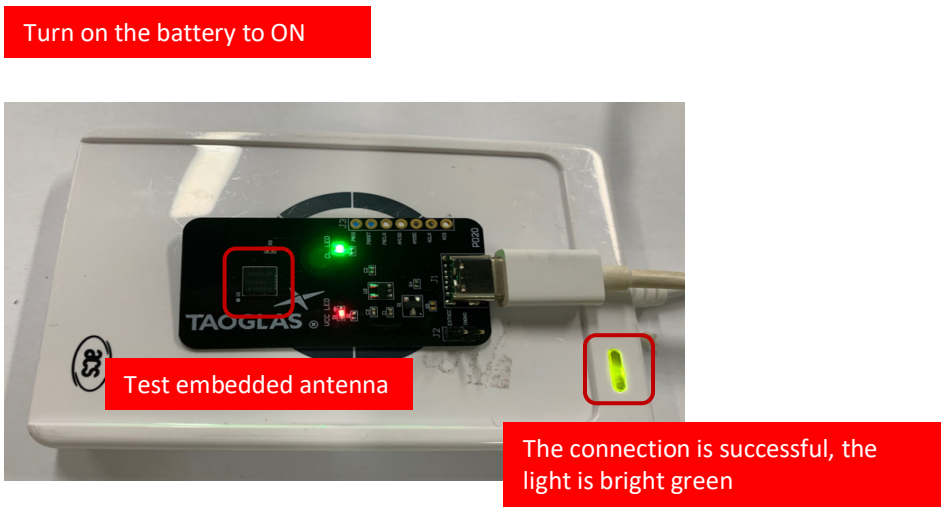

Figure 5 NFC chip set testing

Place the NFC chip evaluation board in the centre above the reader, and if a communication link is successfully setup, the light on the reader will turn bright green, see Figure 5.

11. Ground Plane Clearance Analysis

11.1 EVB Clearance Analysis: Scenario 1

In general applications the NFC chip antenna (NAA5.A) is mounted on a PCB with other discrete components and a ground plane. For correct functioning of the NAA5.A an aperture through all layers of a PCB is required in ground plane at the location of the NAA5.A, see Figure 6.

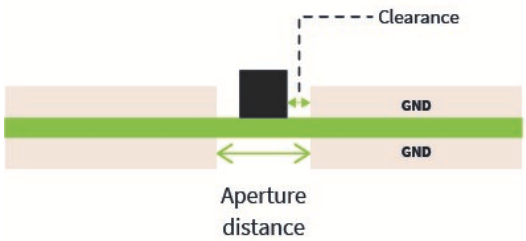

Figure 6 Scenario 1: NFC chip set integrated on the PCB with apertures on both side of the ground planes

Copper has been adhered to NAA5D.A Taoglas le EVB to illustrate a general use case, Scenario 1 (shown in Figure 7). Apertures in ground plane have been made surrounding the NAA5.A chip antenna location with clearances of 0mm, 1mm and 2mm.

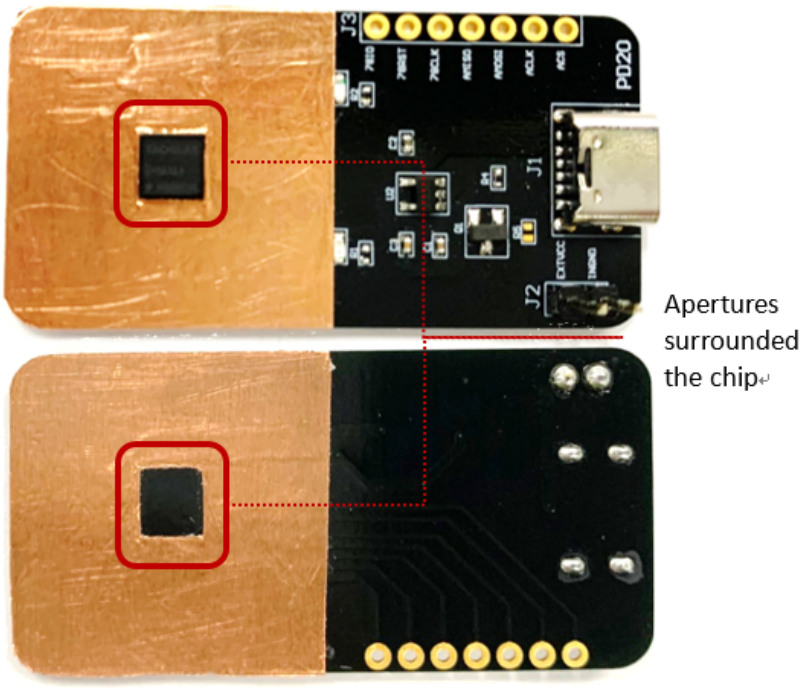

Figure 7 Ground plane on the evaluation board

11.2 Scenario 1: Aperture clearance of 0mm,1mm and 2mm

Aperture edge clearance distances of 0mm, 1mm, and 2mm surrounding the NAA5.A are shown in figures 5, 6 and 7 respectively. Each scenario was tested to find associated interrogation distances. The test result is summarized in Table.1 below with **50mm maximum read distance.** Taoglas recommends a minimum *"clearance between the NAA5.A and the ground edge"* of 1mm to **achieve 50mm read distance** which is the best performance of the NAA5.A. The peripheral components are recommended to be at least **2mm away** from the chip and the closest components should be lower than **2mm in height**, to not affect the performance of the chip.

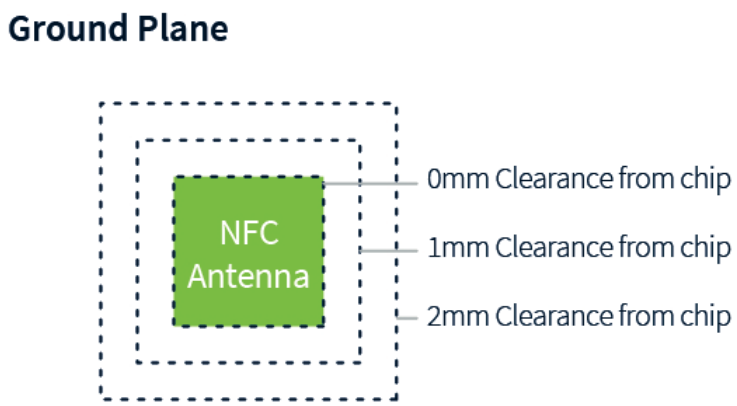

Figure 8 Clearance between the ground plane and the NAA5.A - Duplicated: Top and bottom side of PCB

	NAA5.A EVB Interrogation Distance		NAA5.A 100x100mm GP Interrogation Distance		NAA5.A 200x200mm GP Interrogation Distance	
Clearance	Scenario 1	Scenario 2	Scenario 1	Scenario 2	Scenario 1	Scenario 2
0mm	25mm	25mm	-	-	-	-
1mm	50mm	30mm	50mm	30mm	30mm	25mm
2mm	50mm	30mm	-	-	-	-

Table 1. Ground plane aperture clearance (mm) and associated interrogation distance (mm) as explained below.

11.3 Clearance Analysis Scenario 2

In some applications, the NAA5.A is mounted with a PCB which has an entire ground plane in at least onelayer of the PCB. In the worst case, there is a metal housing and there is only one aperture on the top side of the PCB, for instance, if the antenna is integrated inside a mobile phone with metal housing. An aperture is reserved on the back cover for the communication with the reader, while the front side of the phone is an LCD screen with a big shielded ground plane. A simplified mock up is done as below in Figure10. The aperture on the top represents the apertures on the back cover of the phone, while the back side of the chip antenna is a whole piece of ground plane representing the big ground for the LCD screens/ground plane of the PCB.

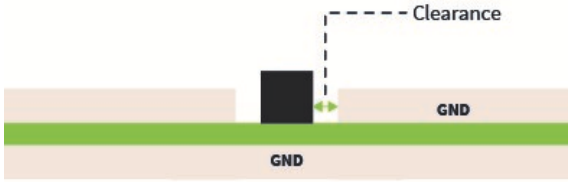

Figure 9 Scenario 2: NAA5.A integrated on the PCB with one aperture on the top, complete grounding at bottom of PCB

11.4 Scenario 2: Aperture clearance of 0mm,1mm and 2mm only on top layer.

Similarly, to the previous section, the clearance between the chip and the ground edge is set to 2mm, 1mm and 0mm. Associated interrogation distance of the NAA5.A when the ground plane aperture clearance surrounding the NFC card module is 2mm, 1mm, and 0mm respectively, summarized in Table.1.

Taoglas recommends a minimum *"clearance between the* NAA5.A *and the ground edge" of 1mm* to achieve a **maximum of 30mm read distance** in this case. The peripheral components are recommended to be at **least 2mm away** from the chip and the closest components should be lower than **2mm in height**, as not to affect the performance of the chip.

12. NAA5.A with Various Ground Plane Sizes

In its simplest integration form, the NAA5.A can function with no peripheral ground plane and only needs the various QFP connection lines to respective system assembly to work such as the case with the Taoglas EVB. Chapter 13 studies the performance of the NAA5D.A EVB with ground extensions. Generally, NFC functions are required in mobile devices or portable devices, but they do come in various shapes and sizes and they would typically consist of a large continuous RF ground plane, power and signal planes for other wireless protocols on same device. Hence, Taoglas has tested the NAA5.A on various ground planes up to 200mm*200mm. Minimum 1mm NFC to ground plane clearance was used as is recommended.

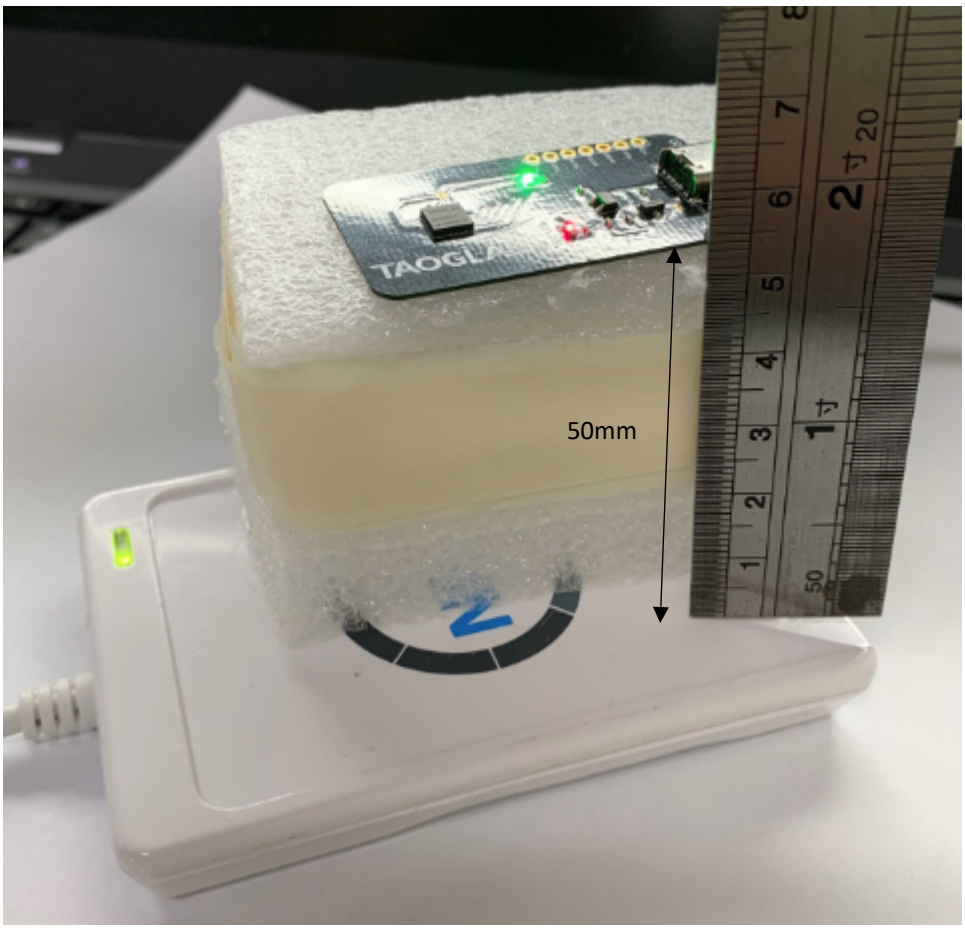

Figure 10 NFC card module testing without ground plane

12.1 100*100mm Ground plane

- In **Scenario 1,** the ground plane has a clearance of 1mm clearance at both the top and bottom ground plane.
- In **Scenario 2**, the ground plane has a clearance of 1mm clearance at the top ground plane, and the bottom ground plane is an entire piece of metal. The tested results are shown in Table 1, Section 10

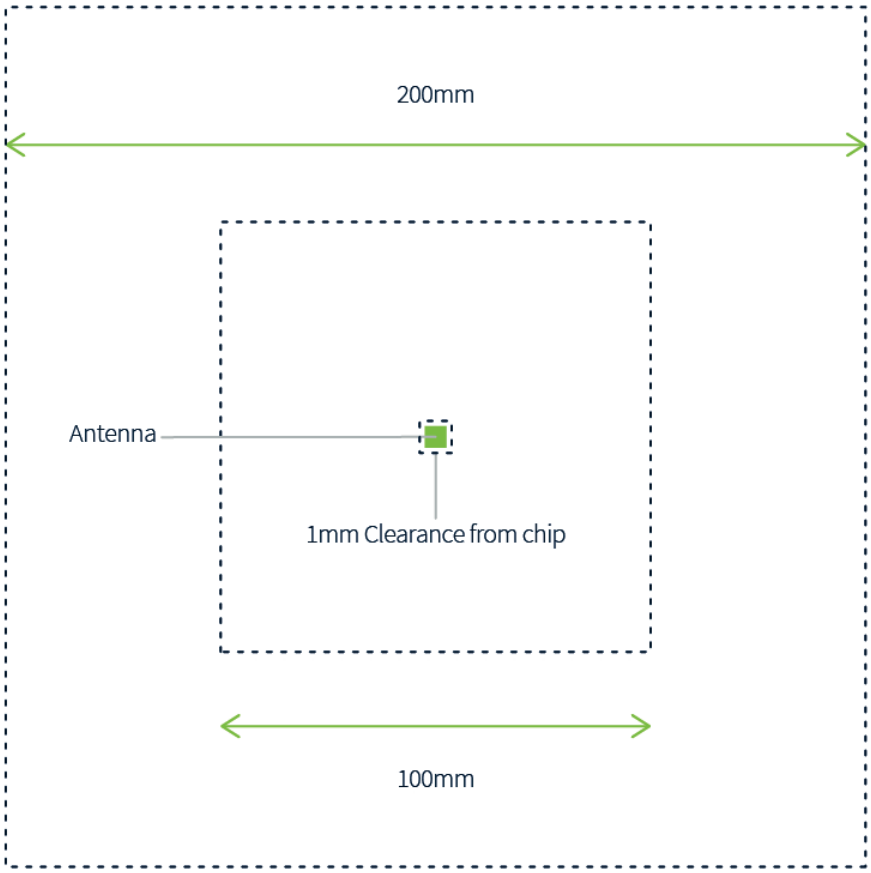

Figure 12. Ground planes of 100 and 200mm with 1mm clearance

12.2 200*200mm Ground plane

Scenario 1 & 2

Scenario 1 Scenario 2

- In **Scenario 1,** the ground plane has a clearance of 1mm clearance at both the top and bottom ground plane.
- In **Scenario 2**, the ground plane has a clearance of 1mm clearance at the top ground plane, and the bottom ground plane is an entire piece of metal. The tested results are shown in Table 1, Section 10

The NAA5.A tests show that the NAA5.A has a high tolerance for the size of the ground plane.

13. Summary of Integration Considerations

Taoglas recommends the following;

1. If there are **no ground planes** in the PCB in the case of the NAA5.A only integration, **50mm maximum readout distance** is achieved when the communication link is established and always repeatable. The peripheral components are recommended to be at least **2mm away** from the chip and the most closely located components should be lower than **2mm** in order not affecting the performance of the chip. The next largest components are recommended to be **8mm away** from the NAA5.A.

2. When there is ground plane with apertures on both side of the PCB, Taoglas recommends a minimum "clearance between the NAA5.A and the ground edge" of 1mm to achieve, **30mm maximum readout distance** of the NFC chip. The peripheral components are recommended to be at **least 2mm away** from the chip and the most closet components should **be lower than 2mm** in order not affecting the performance of the chip. The next largest components are recommended to be **8mm away** from the NAA5.A.

3. When there is an entire ground plane on the back side of the chip and an aperture on the top side of the PCB, Taoglas recommends a minimum "clearance between the NAA5.A and the ground edge" of 1mm to achieve **25mm maximum readout distance**. The peripheral components are recommended to be at least 2mm away from the chip and the most closet components should be lower than 2mm in order not affecting the performance of the chip. The next largest components are recommended to be **8mm away** from the NAA5.A.

4. Lastly, the NAA5.A performance is not sensitive to the size of the ground plane. It works well with different sizes of ground planes up to 200mm*200mm (tested) if 1mm clearance to ground plane edge in all directions are observed. It also works well without ground plane for a **50mm maximum readout distance** as per NAA5D.A EVB kit tests.

Changelog for the datasheet

SPE-19-8-010 – NAA5.A

Revision: B (Current Release)	
Date:	2021-09-15
Notes:	Added MSL and Environmental section
Author:	Erik Landi

Previous Revisions

Revision: A (Original First Release)	
Date:	2019-10-17
Notes:	Datasheet & Application note
Author:	Jack Conroy

TAOGLAS®

www.taoglas.com

© Taoglas