MIL-DTL-5015, Matrix

CRIMP REAR RELEASE SERIES

Amphenol Aerospace

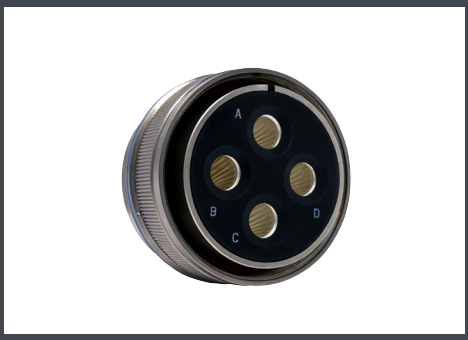

CRIMP REAR RELEASE

About Amphenol® Aerospace

Your Source for Interconnect Products

Amphenol Aerospace

Amphenol Aerospace, Amphenol Commercial Air,
and Amphenol Industrial Operations Main Facility in Sidney, NY USA

Contact Us:

Amphenol Aerospace
40-60 Delaware Avenue
Sidney, NY 13838-1395

Customer Service:
Mon - Fri 8AM - 5PM
Phone: (800) 678-0141
Fax: (607) 563-5157
Online: www.amphenol-aerospace.com

About Amphenol Aerospace:

Amphenol Aerospace, a Division of Amphenol Corporation, is one of the largest manufacturers of interconnect products in the world for the Military, Commercial Aerospace and Industrial markets. Amphenol designs, manufactures and markets circular and rectangular, electronic, fiber optic, EMI/EMP filter, and a variety of special applications connectors and interconnect systems.

Our state-of-the-art facility is nestled at the foothills of the Catskill Mountains in Sidney, NY. The Amphenol complex houses many technologies including CNC machining, die-casting, molding, impact and extruding, plating, screw machining and process controls. Our fully equipped material evaluation lab and engineering organization utilize the latest in computer aided design software and analysis tools, allowing us to design, test, and qualify advanced interconnect systems. Amphenol's interconnect products are supplied to thousands of OEMs worldwide and are supported by our worldwide sales and engineering force, including the largest global network of electronic distributors.

CARE

Customer-Centric:
Our **#1 priority** is our customers who deserve quality product on time.

Accountable:
Clear owners, clear actions, clear results.

Reliable:
What we build matters and quality is imperative.

Enthusiastic:
Challenges create rewarding opportunities. Enthusiasm is contagious and we will spread it.

Quality Assurance:

Amphenol Aerospace has been awarded both AS9100 - Revision C and ISO9001:2008 Quality Assurance Certifications.

MIL-DTL-5015, Matrix®

TABLE OF CONTENTS FOR SECTION M

Design Characteristics, Customer Options 4
Additional MIL-DTL-5015 connectors offered by Amphenol 5
Insert Availability and Identification 6, 7
Insert Arrangement Drawings 8-14
Class Descriptions, Performance Specifications. 15
Insert Alternate Positioning 16
How to Order, Military and Commercial 17

Shell Styles:
Wall mounting receptacle threaded MS3450 (9440) 18
Cable connecting receptacle threaded MS3451 (9441). 19
Box mounting receptacle threaded MS3452 (9442). 20
Jam nut receptacle threaded MS3454 (9444) 21
Straight plug threaded MS3456 (9446) 22
Straight plug, self-locking threaded MS3459 (9816) 23
Quick disconnect plug push-pull coupling (9817/9818). 24
Contact information, sealing plugs, tools 25
Protection caps, dust caps 26-28

MIL-DTL-5015 with Crimp Rear Release Contacts

MS3450
WALL MOUNTING RECEPTACLE

MS3451
CABLE CONNECTING RECEPTACLE

MS3452
BOX MOUNTING RECEPTACLE

MS3454
JAM NUT RECEPTACLE

MS3456
PLUG WITH THREADEDCOUPLING

MS3459
PLUG WITH SELF-LOCKING COUPLING NUT

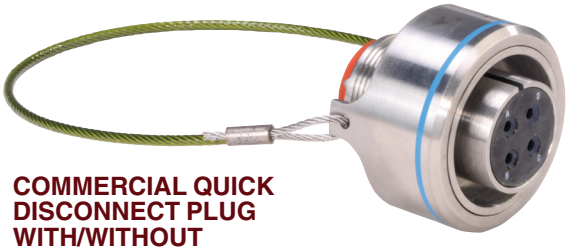

COMMERCIAL QUICK DISCONNECT PLUG WITH/WITHOUT LANYARD

AMPHENOL BROADENS THEIR MS/STANDARD FAMILY OF CONNECTORS WITH THE MIL-DTL-5015 CRIMP REAR RELEASE SERIES

This series provides an improved alternative to the older MIL-C-5015 solder type. It bridges the gap between an old connector standard and the environmental and high performance needs of current technologies.

DESIGN CHARACTERISTICS

- Medium to heavy weight enviornmental cylindrical
- MS345( ) series intermateable with existing MIL-DTL-5015 solder or crimp versions on existing equipment
- Captive coupling nut mechanism, utilizes retaining rings in combination with “L” washers to prevent inadvertent disassembly
- Multiple interlock systems ensure permanent insert retention
- Positive control of dielectric separation with guaranteed ease of contact insertion
- Positive contact retention provided by a closely toleranced damage-proof metal retention clip
- Completely sealed against environmental extremes with -
  - Individual contact seals (conical risers on pin interface)
  - Interfacial seals between contacts
  - Peripheral gasket shell-to-shell seals
  - Redundant rear wire seals and insert-to-shell seals

CUSTOMER OPTIONS

- Seven mounting styles, in shell sizes 8 to 40
- Threaded coupling or self-locking plug (MS3459) with an internal ratcheting mechanism to prevent unmating due to vibration and shock, eliminating the need for safety wiring
- Proprietary quick disconnect plug, with or without lanyard available
- Classes include aluminum or stainless steel shells, or firewall capability
- Mil-Spec and custom proprietary versions available
- Some styles are supplied to McDonnell Douglas Specification BAN 7025, DC60 Series
- Accommodation of contact sizes 0 to 16
- Over 100 insert arrangement patterns available, accommodating from a minimum of 1 to a maximum of 85 circuits
- Alternate positioning available
- High power RADSOK socket contacts available

NOTE: MIL-C-5015 is superseded to MIL-DTL-5015 for all Amphenol/Matrix rear release crimp type contacts.

Amphenol Matrix 5015 Connector With RADSOK® Contacts

Amphenol Aerospace

FOR HIGH POWER APPLICATIONS

- Completely environmentally sealed with contact seals, gaskets, wire seals and insert-to-shell seals
- Special design enhanced with RADSOK contacts in the plug or receptacle instead of standard rear release crimp contacts
- All the shell styles and finishes of the Matrix 5015 family are available, including firewall styles and non-decoupling style
- Recommended for applications up to 150° operating temperature
- Up to 40% increased current carrying capability
- RADSOK contacts provide high amperage capability with minimal voltage loss and low insertion forces
- The RADSOK contact has a hyperbolic, stamped grid configuration with the socket circular. As a male pin is inserted, axial members in the female socket deflect, enabling high current flow across the connection with minimal voltage loss

RADSOK

Standard Contacts	
Size	Amps
8	46
4	80
0	150

RADSOK Contacts		
Size	Amps	Cartridge size
8	70	3.6 MM
4	120	5.7MM
0	250	9.1MM

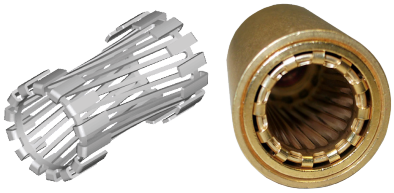

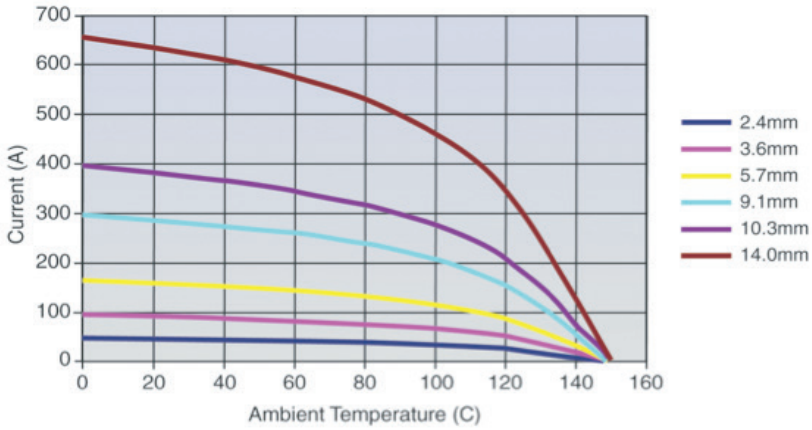

NEW RoHS FINISHES

BLACK ZINC NICKEL IS AMPHENOL'S 2ND RoHS COMPLIANT PLATING ALTERNATIVE TO CADMIUM

Amphenol is now offering a new RoHS compliant alternative to Cadmium. Black Zinc Nickel is a non-reflective and conductive black finish approved for 500 hrs salt spray making it an excellent choice for harsh environments. Black Zinc Nickel has been qualified by the DLA. Black Zinc Nickel is compatible with other platings and available on a wide variety of accessories.

AMPHENOL'S DURMALON™

Durmalon, like Olive-Drab Cadmium plating (Class W), meets 500 hours of dynamic salt spray, combined with 500 mating cycles and meets specified millivolt drop shell-to-shell conductivity. Durmalon also meets a 200° C temperature rating. Durmalon has been proven to meet this requirement as well as Potassium Formate-Deicer fluid testing performed by Boeing.

BLACK ZINC NICKLE FINISH

Insert Availability and Identification

Insert Arrangement	Service Rating	Total Contacts	Contact Size				
			0	4	8	12	16
8S-1	A	1					1
10S-2	A	1					1
10SL-3	A	3					3
10SL-4	A	2					2
12S-1	A	2					2
12S-2	A	2					2
12S-3	A	2					2
12S-4	D	1					1
12-5	D	1				1	
14S-2	Inst.	4					4
14-3	A	1			1		
14S-5	Inst.	5					5
14S-6	Inst.	6					6
14S-7	A	3					3
14S-9**	A	2					2
14S-10	Inst.	4					4
14S-11	Inst.	4					4
14S-12	A	3					3
14S-13	A	3					3
16S-1	A	7					7
16-2*	E	1				1	
16S-8	A	5					5
16-9	A	4				2	2
16-10	A	3				3	
16-11	A	2				2	
16-12	A	1		1			
16-13	A	2				2	
18-1	A/Inst.	10					10
18-4	D	4					4
18-5 •	D	3				2	1
18-6*	D	1		1			
18-8	A	8				1	7
18-9	Inst.	7				2	5
18-10**	A	4				4	
18-11	A	5				5	
18-12	A	6					6
18-13	A	4			1	3	
18-15	A	4				4	
18-17	Inst.	7				2	5
18-18	Inst.	7				2	5
18-19**	A	10					10
18-22**	D	3					3
18-23	A/Inst.	10					10

Insert Arrangement	Service Rating	Total Contacts	Contact Size				
			0	4	8	12	16
18-24	A/Inst.	10					10
18-27•	D	3				2	1
18-28•	D	3				2	1
20-2	D	1	1				
20-4	D	4				4	
20-7	D/A	8					8
20-8	Inst.	6			2		4
20-14	A	5			2	3	
20-15	A	7				7	
20-16	A	9				2	7
20-17	A	6				5	1
20-18	A	9				3	6
20-19	A	3			3		
20-21	A	9				1	8
20-22	A	6			3		3
20-24	A	4			2		2
20-27	A	14					14
20-29	A	17					17
20-32	D/A	8					8
20-33	A	11					11
22-2	D	3			3		
22-5	D	6				2	4
22-6*	D	3			2		1
22-7*	E	1	1				
22-10*	E	4					4
22-11*	B	2					2
22-14	A	19					19
22-19	A	14					14
22-21	A	3	1				2
22-22	A	4			4		
22-23	D/A	8				8	
22-30	A	19					19
22-32	D	6				2	4
24-2	D	7				7	
24-5**	A	16					16

* Consult Amphenol Aerospace for availability
** Inactive for new design
• Socket Only

Insert Availability and Identification

Amphenol Aerospace

Insert Arrangement	Service Rating	Total Contacts	Contact Size				
			0	4	8	12	16
24-7	A	16				2	14
24-10	A	7			7		
24-11	A	9			3	6	
24-12	A	5		2		3	
24-15	A	16					16
24-20	D	11				2	9
24-22	D	4			4		
24-24	A	16					16
24-28	Inst.	24					24
28-1	D/A	9			3	6	
28-2	D	14				2	12
28-9	D	12				6	6
28-10	D/A	7		2	2	3	
28-11	A	22				4	18
28-12	A	26					26
28-13	A	26					26
28-15	A	35					35
28-17	B/D/A	15					15
28-19*	B/D/A	10				4	6
28-20	A	14				10	4
28-21	A	37					37
28-22	D	6		3			3
32-1	E/D	5	2			3	
32-6	A	23		2	3	2	16
32-7	Inst./A	35				7	28
32-9	D	14		2			12
32-13	D	23				5	18
32-15	D	8	2			6	
32-16	A	23		2	3	2	16
32-17	D	4		4			
32-19	E/D	5	2			3	

Insert Arrangement	Service Rating	Total Contacts	Contact Size				
			0	4	8	12	16
32-63	D	5		5			
32-73	A	46					46
36-3	D	6	3			3	
36-5	A	4	4				
36-6	A	6	2	4			
36-7	A	47				7	40
36-8	A	47				1	46
36-9	A	31		1	2	14	14
36-10	A	48					48
36-11	A	48					48
36-12	A	48					48
36-15	D/A	35					35
36-16	A	47				7	40
36-17	A	47				7	40
36-18	A	31		1	2	14	14
36-21	A	31		1	2	14	14
36-52	A	52					52
40-1	D	30				6	24
40-9	A	47			1	22	24
40-56	A	85					85

* Consult Amphenol Aerospace for availability
** Inactive for new design

Insert Arrangements

Front Face of Pin Insert or Rear Face of Socket Insert Illustrated

100° Rotation of 12S-3

250° Rotation of 12S-3

Insert Arrangement	8S-1	10S-2	10SL-3	10SL-4	12S-1	12S-2	12S-3
Service Rating	A	A	A***	A	A	A	A
Number of Contacts	1	1	3	2	2	2	2
Contact Size	16	16	16	16	16	16	16

Insert Arrangement	12S-4	12-5	14S-2	14-3	14S-5	14S-6
Service Rating	D	D	Inst.	A	Inst.	Inst.
Number of Contacts	1	1	4	1	5	6
Contact Size	16	12	16	8	16	16

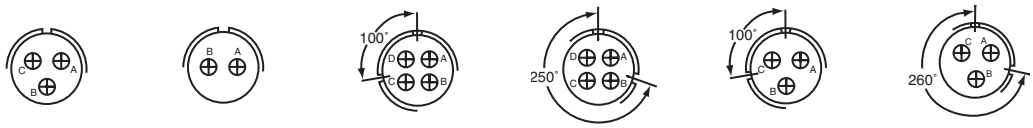

100° Rotation of 14S-2

250° Rotation of 14S-2

100° Rotation of 14S-1

260° Rotation of 14S-1

Insert Arrangement	14S-7	14S-9**	14S-10	14S-11	14S-12	14S-13
Service Rating	A	A	Inst.	Inst.	A	A
Number of Contacts	3	2	4	4	3	3
Contact Size	16	16	16	16	16	16

Insert Arrangement	16S-1	16-2*	16S-8	16-9		16-10	16-11
Service Rating	A	E	A	A		A	A
Number of Contacts	7	1	5	2	2	3	2
Contact Size	16	12	16	12	16	12	12

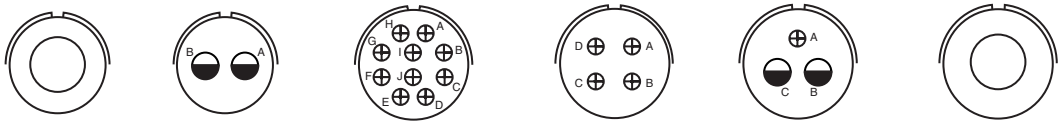

Insert Arrangement	16-12	16-13	18-1	18-4	18-5 •		18-6*
Service Rating	A	A	B, C, F, G = A; Bal. = Inst.	D	D		D
Number of Contacts	1	2†	10	4	2	1	1
Contact Size	4	12	16	16	12	16	4

* Consult Amphenol Aerospace for availability.
** Inactive for new design
*** Service rating Inst. Class K
• Socket only
† One Iron contact and one Constantan contact

CONTACT LEGEND

16 12 8 4 0

Insert Arrangements

Amphenol Aerospace

Front Face of Pin Insert or Rear Face of Socket Insert Illustrated

Insert Arrangement	18-8*		18-9		18-10**	18-11	18-12	18-13	
Service Rating	A		Inst.		A	A	A	A	
Number of Contacts	1	7	2	5	4	5	6	1	3
Contact Size	12	16	12	16	12	12	16	8	12

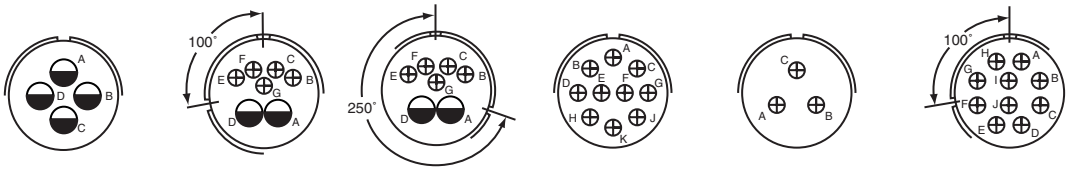

100° Rotation of 18-9

250° Rotation of 18-9

100° Rotation of 18-1

Insert Arrangement	18-15	18-17		18-18		18-19**	18-22**	18-23
Service Rating	A	Inst.		Inst.		A	D	B, C, F, G = A; Bal. = Inst.
Number of Contacts	4††	2	5	2	5	10	3	10
Contact Size	12	12	16	12	16	16	16	16

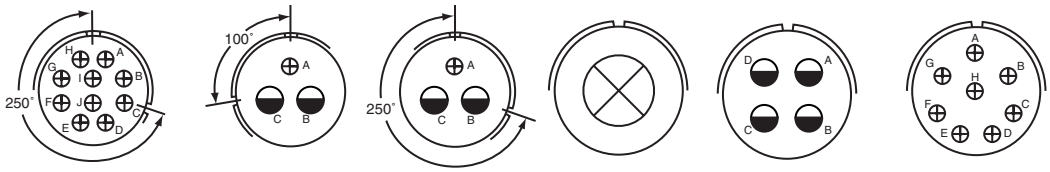

250° Rotation of 18-1

100° Rotation of 18-5

250° Rotation of 18-5

Insert Arrangement	18-24	18-27 •		18-28 •		20-2	20-4	20-7
Service Rating	B, C, F, G = A; Bal. = Inst.	D		D		D	D	A, B, G, H = D C, D, E, F = A
Number of Contacts	10	2	1	2	1	1	4	8
Contact Size	16	12	16	12	16	0	12	16

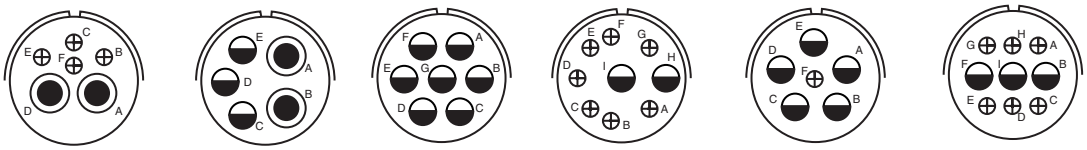

Insert Arrangement	20-8*		20-14		20-15	20-16		20-17		20-18	
Service Rating	Inst.		A		A	A		A		A	
Number of Contacts	2	4	2	3	7	2	7	5	1	3	6
Contact Size	8	16	8	12	12	12	16	12	16	12	16

* Consult Amphenol Aerospace for availability.
** Inactive for new design
• Socket only
†† A, C = Iron; B, D = Constantan

CONTACT LEGEND

16 **12** **8** **4** **0**

5015 MATRIX

Insert Arrangements

Front Face of Pin Insert or Rear Face of Socket Insert Illustrated

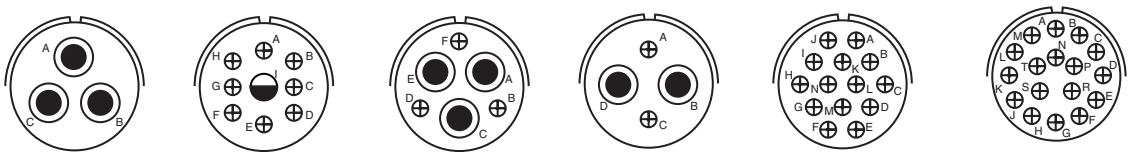

Insert Arrangement	20-19	20-21		20-22		20-24		20-27	20-29
Service Rating	A	A		A		A		A	A
Number of Contacts	3	1	8	3	3	2	2	14	17
Contact Size	8	12	16	8	16	8	16	16	16

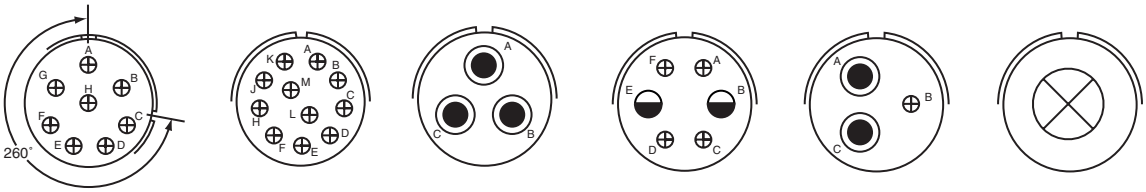

260° Rotation of 20-7

Insert Arrangement	20-32	20-33	22-2	22-5		22-6**		22-7*
Service Rating	A, B, G, H = D; Bal. = A	A	D	D		D		E
Number of Contacts	8	11	3	2	4	2	1	1
Contact Size	16	16	8	12	16	8	16	0

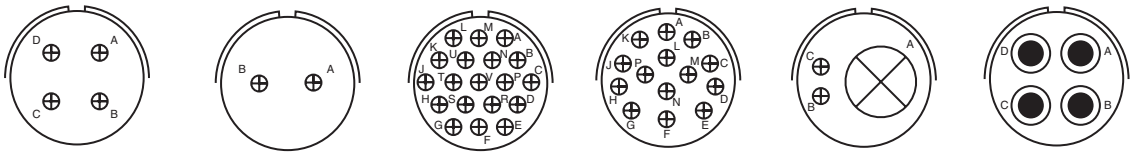

Insert Arrangement	22-10*	22-11*	22-14	22-19	22-21		22-22
Service Rating	E	B	A	A	A		A
Number of Contacts	4	2	19	14	1	2	4
Contact Size	16	16	16	16	0	16	8

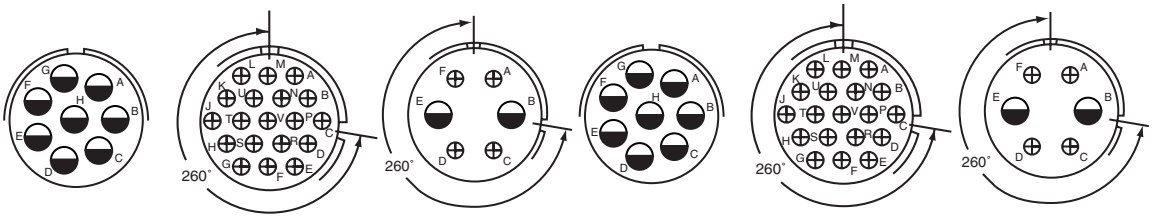

260° Rotation of 22-14 | 260° Rotation of 22-5 | 260° Rotation of 22-14 | 260° Rotation of 22-5

Insert Arrangement	22-23	22-30	22-32		22-23	22-30	22-32	
Service Rating	H = D; Bal. = A	A	D		H = D; Bal. = A	A	D	
Number of Contacts	8	19	2	4	8	19	2	4
Contact Size	12	16	12	16	12	16	12	16

*Consult Amphenol Aerospace for availability.
** Inactive for new design

CONTACT LEGEND

16 12 8 4 0

Insert Arrangements

Amphenol Aerospace

Front Face of Pin Insert or Rear Face of Socket Insert Illustrated

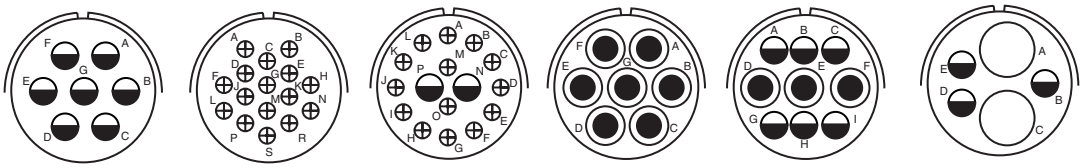

Insert Arrangement	24-2	24-5**	24-7		24-10	24-11		24-12	
Service Rating	D	A	A		A	A		A	
Number of Contacts	7	16	2	14	7	3	6	2	3
Contact Size	12	16	12	16	8	8	12	4	12

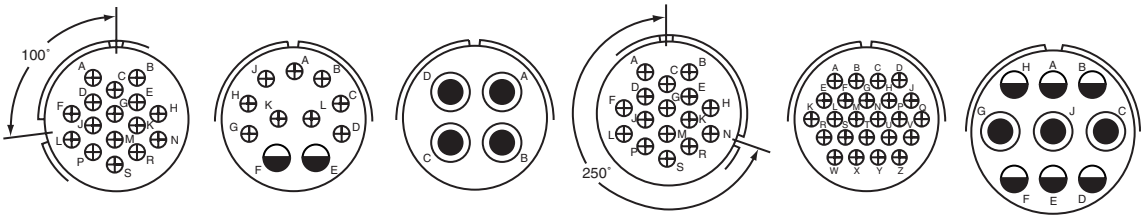

100° Rotation of 24-5

250° Rotation of 24-5

Insert Arrangement	24-15		24-20	24-22	24-24	24-28	28-1	
Service Rating	A		D	D	A	Inst.	A, J, E = D; Bal. = A	
Number of Contacts	16	1	9	4	16	24	2	7
Contact Size	16	8	16	8	16	16	12	6

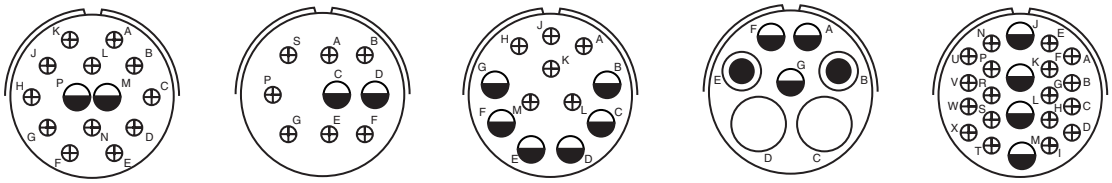

Insert Arrangement	28-2		28-4*		28-9		28-10			28-11	
Service Rating	D		G, P, S = E; Bal. = D		D		G = D, Bal. = A			A	
Number of Contacts	2	12	2	7	6	6	2	2	3	4	18
Contact Size	12	16	12	16	12	16	4	8	12	12	16

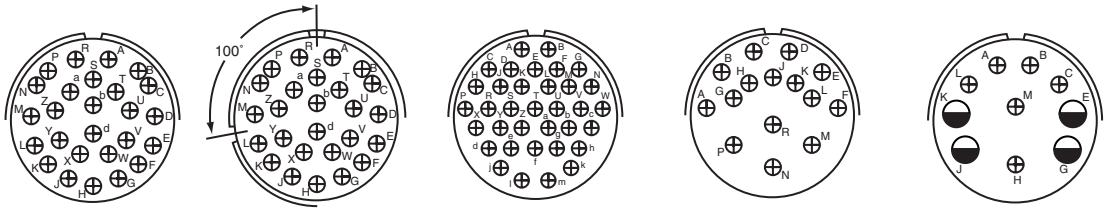

100° Rotation of 28-12

Insert Arrangement	28-12	28-13	28-15	28-17	28-19*	
Service Rating	A	A	A	R = B; M, N, P = D; Bal. = A	H, M = B; A, B = D; Bal. = A	
Number of Contacts	26	26	35	15	4	6
Contact Size	16	16	16	16	12	16

*Consult Amphenol Aerospace for availability.

** Inactive for new design

CONTACT LEGEND

16 12 8 4 0

5015 MATRIX

Insert Arrangements

Front Face of Pin Insert or Rear Face of Socket Insert Illustrated

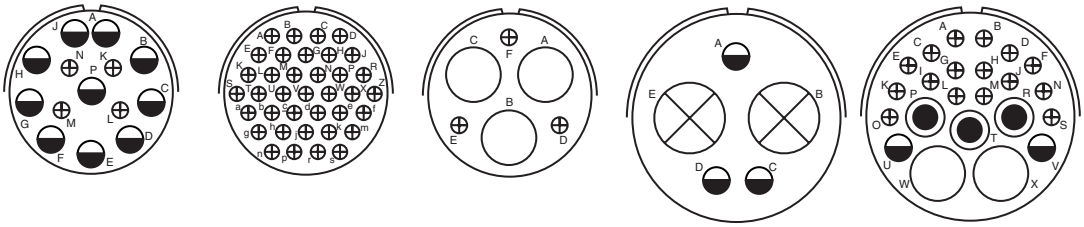

Insert Arrangement	28-20		28-21	28-22		32-1		32-6			
Service Rating	A		A	D		A = E; B, C, D, E = D		A			
Number of Contacts	10	4	37	3	3	2	3	2	3	2	16
Contact Size	12	16	16	4	16	0	12	4	8	12	16

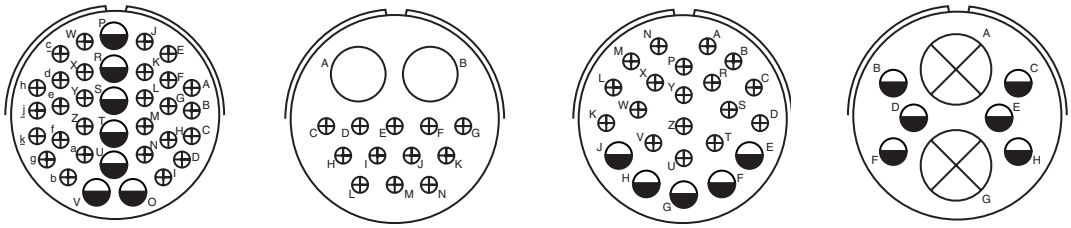

Insert Arrangement	32-7		32-9		32-13		32-15	
Service Rating	A, B, h, j = Inst.; Bal. = A		D		D		D	
Number of Contacts	7	28	2	12	5	18	2	6
Contact Size	12	16	4	16	12	16	0	12

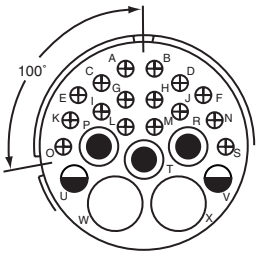

100° Rotation
of 32-6

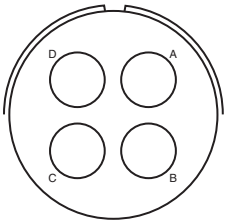

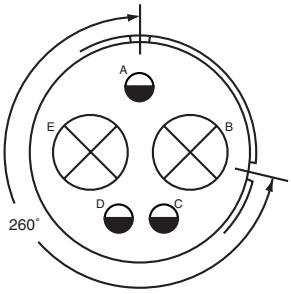

260° Rotation
of 32-1

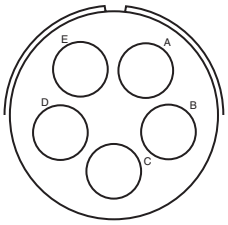

Insert Arrangement	32-16				32-17	32-19		32-63
Service Rating	A				D	A = E, Bal. = D		D
Number of Contacts	2	3	2	16	4	2	3	5
Contact Size	4	8	12	16	4	0	12	4

CONTACT LEGEND **16** **12** **8** **4** **0**

5015

MATRIX

Insert Arrangements

Amphenol Aerospace

Front Face of Pin Insert or Rear Face of Socket Insert Illustrated

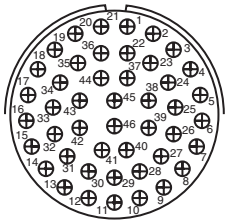
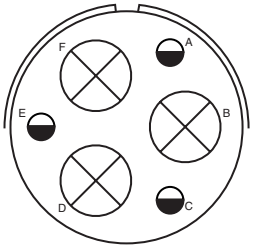
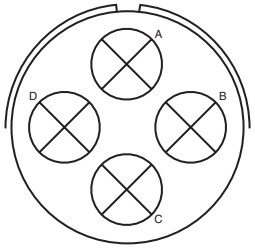
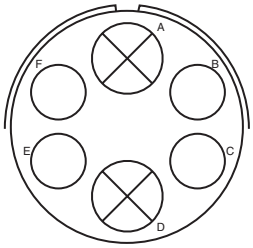

Insert Arrangement	32-73	36-3		36-5	36-6	
Service Rating	A	D		A	A	
Number of Contacts	46	3	3	4	2	4
Contact Size	16	0	12	0	0	4

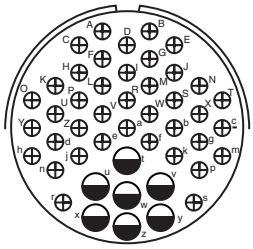
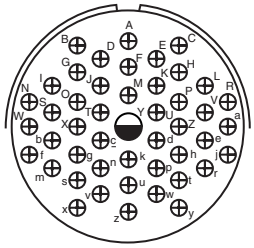
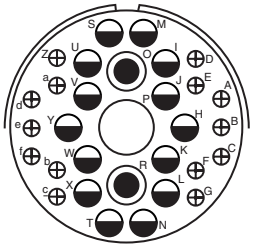
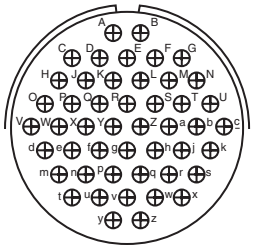

Insert Arrangement	36-7		36-8		36-9				36-10
Service Rating	A		A		A				A
Number of Contacts	7	40	1	46	1	2	14	14	48
Contact Size	12	16	12	16	4	8	12	16	16

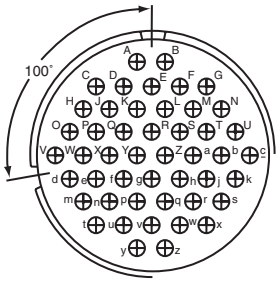

100° Rotation of 36-10

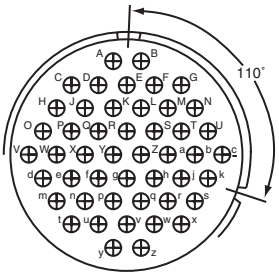

110° Rotation of 36-10

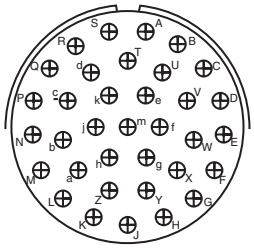

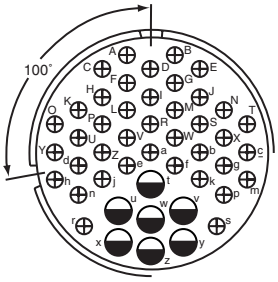

100° Rotation of 36-7

Insert Arrangement	36-11	36-12	36-15	36-16	
Service Rating	A	A	M = D, Bal. = A	A	
Number of Contacts	48	48	35	7	40
Contact Size	16	16	16	12	16

CONTACT LEGEND

16 12 8 4 0

5015 MATRIX

Insert Arrangements

110° Rotation of 36-7

Front Face of Pin Insert or Rear Face of Socket Insert Illustrated

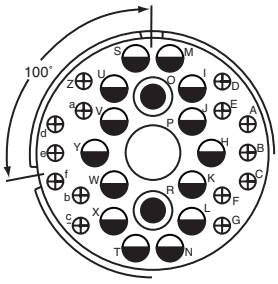

100° Rotation of 36-9

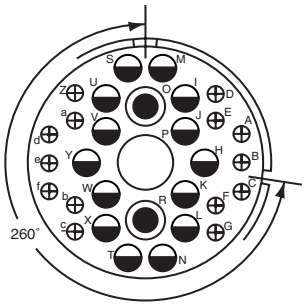

260° Rotation of 36-9

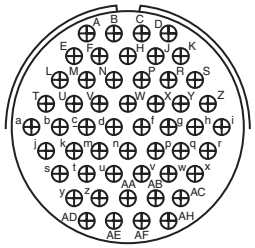

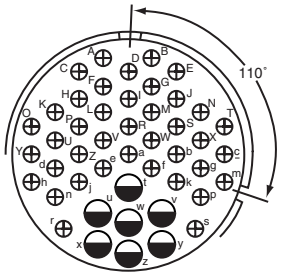

Insert Arrangement	36-18				36-21				36-52	36-17	
Service Rating	A				A				A	A	
Number of Contacts	1	2	14	14	1	2	14	14	52	7	40
Contact Size	4	8	12	16	4	8	12	16	16	12	16

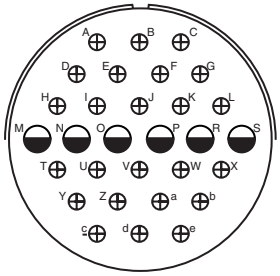

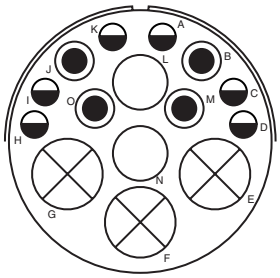

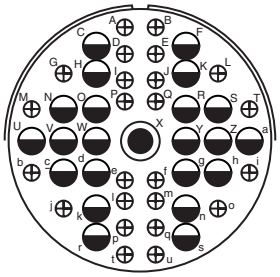

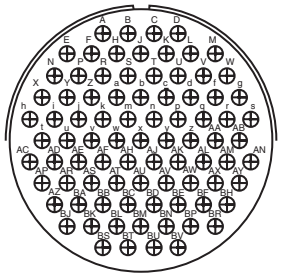

Insert Arrangement	40-1		40-5*				40-9			40-56
Service Rating	D		A				A			A
Number of Contacts	6	24	3	2	4	6	1	22	24	85
Contact Size	12	16	0	4	8	2	6	12	16	16

* Consult Amphenol Aerospace for availability.

CONTACT LEGEND

16 12 8 4 0

Amphenol Aerospace

CLASS DESCRIPTIONS

MILITARY MIL-DTL-5015	
Class L*	Aluminum shell, electroless nickel finish, fluid resistant insert
Class W	Aluminum shell, cadmium olive drab finish, fluid resistant insert
Class LS	Stainless steel shell, passivated, fluid resistant insert
Class KT**	Firewall, steel shell, cadmium olive drab finish, non-flammable hard dielectric and fluid resistant insert
Class KS	Firewall, stainless steel shell, passivated, non-flammable hard dielectric and fluid resistant insert

* Class L inactivates older Class U (aluminum, electroless nickel)
** Class KT (ferrous alloy, cadmium/olive drab) inactivates older Class K (ferrous alloy, electroless nickel)

AMPHENOL/MATRIX	
Class A	Aluminum shell, black anodize finish, fluid resistant insert
Class F	Aluminum shell, electroless nickel finish, fluid resistant insert
Class W	Aluminum shell, cadmium/olive drab finish, fluid resistant insert
Class FS	Stainless steel shell, passivated, fluid resistant insert
Class KT	Firewall, steel shell, cadmium olive drab finish, non-flammable hard dielectric and fluid resistant insert
Class KS	Firewall, stainless steel shell, passivated, non-flammable hard dielectric and fluid resistant insert
Class DT	Aluminum shell, Durmalon (Nickle PTFE)
Class DZ	Aluminum shell, Black Zinc Nickel*

* Not available in size 36 or 40

PERFORMANCE SPECIFICATIONS

VOLTAGE RATING						
Altitude	Inst.	A	D	E	B	C
Sea Level	1000	2000	2800	3500	4500	7000
50,000 ft.	400	600	675	750	825	975
70,000 ft.	260	360	400	440	480	560
110,000 ft.	200	200	200	200	200	200

SHOCK

Wired, mated connectors are subjected to one shock in each of three mutually perpendicular axes with pulse of an approximate half sine wave of 50g magnitude for a duration of 11 milliseconds. All contacts wired in series circuit with 100 ±10 Milliamperes of current flow.

OPERATING TEMPERATURE RANGE

Classes L, LS and KS have temperature range of
–55°C (–75°F) to 200°C (392°F)
Classes W and KT have temperature range of
–55°C (–75°F) to 175°C (347°F)

ENVIRONMENTAL SEAL

Wired, mated connectors with the specified accessory attached will meet the altitude immersion test specified in MIL-DTL-5015.

DURABILITY

Minimum of 100 mating cycles.

Insert Alternate Positioning

To avoid cross-plugging problems in applications requiring the use of more than one connector of the same size and arrangement, alternate rotations are available as indicated in the accompanying charts.

As shown in the diagram below, the front face of the pin insert is rotated within the shell in a clockwise direction from the normal shell key. The socket insert would be rotated counter-clockwise the same number of degrees in respect to the normal shell key.

The charts give the W, X, Y, Z positions for the alternate rotations available for the insert arrangements of the rear release MIL-DTL-5015 series of connectors. If an insert arrangement number is not given, then there is no available alternate rotation for that pattern.

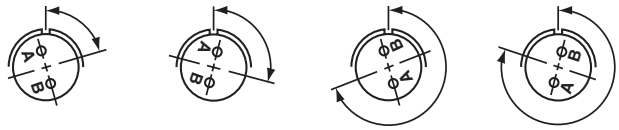

Position W Position X Position Y Position Z

View looking into front face of pin insert or rear of socket insert.

The following insert arrangements have the same alternate insert rotations for W, X, Y and Z, which are:

Degrees			
W	X	Y	Z
80	110	250	280

16-7	20-22	24-4	28-4	28-21	40-3
18-5	22-6	24-5	28-8	32-1	40-4
18-9	22-12	24-6	28-9	32-3	40-5
18-13	22-14	24-7	28-10	32-6	40-6
18-14	22-15	24-12	28-11	32-9	40-7
20-7	22-17	24-16	28-15	32-13	40-11
20-8	22-18	24-20	28-16	32-22	
20-9	22-19	24-21	28-17	36-7	
20-14	22-21	24-28	28-19	36-8	
20-16	24-1	28-1	28-20	40-2	

Insert Arrangement	Degrees			
	W	X	Y	Z
12S-3	70	145	215	290
14S-2	–	120	240	–
14S-5	–	110	–	–
14S-7	90	180	270	–
14S-9	70	145	215	290
16S-1	80	–	–	280
16S-4	35	110	250	325
16S-8	–	170	265	–
16-9	35	110	250	325
16-10	90	180	270	–
16-11	35	110	250	325
16-13	35	110	250	325
18-1	70	145	215	290
18-4	35	110	250	325
18-8	70	–	–	290
18-10	–	120	240	–
18-11	–	170	265	–
18-12	80	–	–	280
18-15	–	120	240	–
18-19	–	120	240	–
18-22	70	145	215	290
20-4	45	110	250	–
20-15	80	–	–	280

Insert Arrangement	Degrees			
	W	X	Y	Z
20-17	90	180	270	–
20-18	35	110	250	325
20-19	90	180	270	–
20-21	35	110	250	325
20-24	35	110	250	325
20-27	35	110	250	325
20-29	80	–	–	280
22-2	70	145	215	290
22-4	35	110	250	325
22-5	35	110	250	325
22-9	70	145	215	290
22-10	35	110	250	325
22-11	35	110	250	325
22-22	–	110	250	–
22-23	35	–	250	–
22-27	80	–	250	280
22-36	90	–	270	–
24-2	80	–	–	280
24-10	80	–	–	280
24-11	35	110	250	325
24-22	45	110	250	–
24-27	80	–	–	280
24-80	35	145	240	300

Insert Arrangement	Degrees			
	W	X	Y	Z
28-2	35	110	250	325
28-3	70	145	215	290
28-5	35	110	250	325
28-12	90	180	270	–
28-18	70	145	215	290
28-22	70	145	215	290
32-2	70	145	215	290
32-7	80	125	235	280
32-15	35	110	250	280
32-17	45	110	250	–
32-73	36	–	–	–
36-3	70	145	215	290
36-5	–	120	240	–
36-6	35	110	250	325
36-9	80	125	235	280
36-10	80	125	235	280
36-15	60	125	245	305
36-52	72	144	216	288
36-66	110	250	260	280
40-1	65	130	235	300
40-9	65	125	255	310
40-10	65	125	255	310
40-56	72	144	216	288
40-62	30	130	220	290

How to Order

Amphenol Aerospace

MIL-DTL-5015 with rear release crimp contacts	1. Connector Type	2. Shell Style	3. Service class	4. Shell Size–Insert Arrangement	5. Contact Types	6. Alternate Positions	7. Modification Number
MILITARY	MS	3456	L	16S–8	P	W	NA
COMMERCIAL	944	6	F	16S–8	P	W	(XXX)

1. MILITARY CONNECTORY TYPE

MS	Designates Military Standard

2. SHELL STYLE - THREADED COUPLING

3450	Wall mounting receptacle
3451	Cable connecting receptacle
3452	Box mounting receptacle
3454	Jam nut receptacle
3456	Straight plug
3459	Straight plug with self-locking coupling nut

3. SERVICE CLASS

L	Aluminum shell, electroless nickel finish, fluid resistant insert
W	Aluminum shell, cadmium olive drab finish, fluid resistant insert
LS	Stainless steel shell, passivated, fluid resistant insert

FIREWALL STYLES ONLY AVAILABLE FOR 3450, 3456, 3459 PER MIL SPEC:

KT	Firewall, steel shell, cadmium/olive drab finish, non-flammable hard dielectric and fluid resistant insert
KS	Firewall, stainless steel shell, passivated, non-flammable hard dielectric and fluid resistant insert

Note: Class L inactivates older Class U.
Class K is inactive and has been replaced by Class KT for all applications.

4. SHELL SIZE & INSERT ARRANGEMENT SEE PAGES 3-13

First number represents Shell Size, second number is the Insert Arrangement.

5. CONTACT TYPE

P	Pin
S	Socket
A	Less pins
B	Less sockets

6. ALTERNATE POSITIONS

"W", "X", "Y", "Z" designate that insert is rotated in its shell from normal position. No letter required for normal (no rotation) position. See page 16 for description of alternate positions.

1. COMMERCIAL CONNECTOR TYPE

944	Designates Amphenol/Matrix Commercial Series
981	Designates self locking/Quick disconnect (+)(-) lanyard

2. SHELL STYLE - THREADED COUPLING

0	Wall mounting receptacle
1	Cable connecting receptacle
2	Box mounting receptacle
4	Jam nut receptacle
6	Straight plug

2. SELF LOCKING/QUICK DISCONNECT (981)

6	Straight plug with self-locking coupling nut
7	Quick disconnect plug with lanyard
8	Quick disconnect plug without lanyard

3. SERVICE CLASS

A	Aluminum shell, black anodize finish, fluid resistant insert (not MIL-Spec)
F	Aluminum shell, electroless nickel finish, fluid resistant insert
FS	Stainless steel shell, passivated, fluid resistant insert
RS	Fluid resistant insert
KT	Firewall, steel shell, cadmium/olive drab finish, non-flammable hard dielectric and fluid resistant insert
KS	Firewall, stainless steel shell, passivated, non-flammable hard dielectric and fluid resistant insert
NEW DT	Aluminum shell, Durmalon (Nickle PTFE)
NEW DZ	Aluminum shell, Black Zinc Nickel*

* Not available in size 36 or 40

4. SHELL SIZE & INSERT ARRANGEMENT SEE PAGES 3-13

First number represents Shell Size, second number is the Insert Arrangement.

5. CONTACT TYPE

P	Pin
S	Socket

6. ALTERNATE POSITIONS

"W", "X", "Y", "Z" designate that insert is rotated in its shell from normal position. No letter required for normal (no rotation) position. See page 16 for description of alternate positions.

7. MODIFICATION NUMBER

Consult Amphenol Aerospace for information.
For strain reliefs use the following modification codes:

(189)	E-nut M85049/31 configuration
(190)	Straight strain relief M85049/52 configuration
(191)	90° strain relief M85049/51 configuration
NEW (988)	RADSOK sockets (sizes 0-8 guage only)

Wall Mounting Receptacle

Military (MS3450), Commercial (9440)

PART NUMBER BUILDER PAGE M16

MILITARY
MS3450

COMMERCIAL
9440

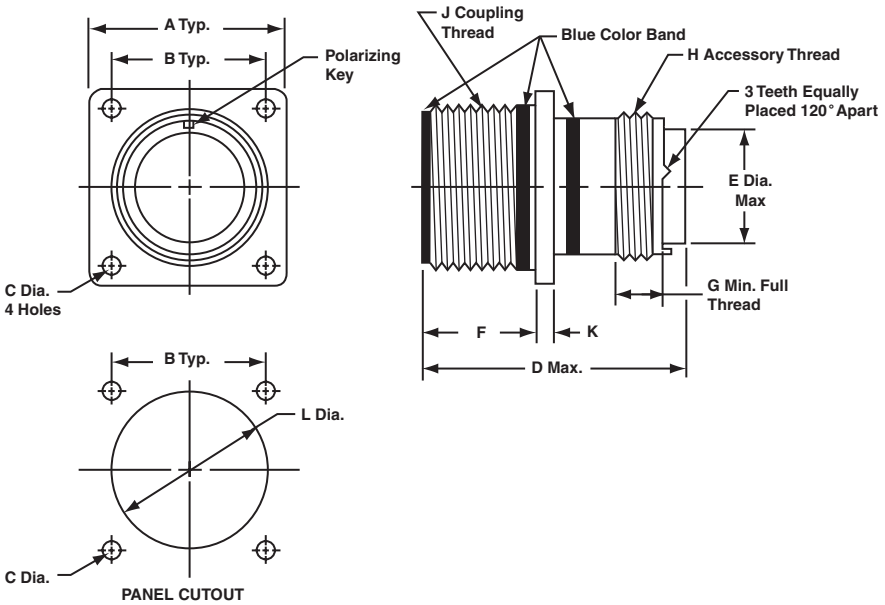

Shell Size*	A ±.031	B	C Dia. +.010 −.005		D Max.		E Dia. Max.	F	G Min.	H Thread Class 2A	J Thread Class 2A	K	L Dia. ±.010
			Class A, F, R, W	Class K	Size 16 & 12 Contacts	Size 8, 4, 0 Contacts							
8S	.875	.594	.120	.150	2.031	–	.305	.593/.562	.290	.5000-20 UNEF	.5000-28 UNEF	.083	.562
10S	1.000	.719	.120	.150	2.031	–	.405	.593/.562	.290	.6250-24 UNEF	.6250-24 UNEF	.083	.688
10SL	1.000	.719	.120	.150	2.031	–	.405	.593/.562	.290	.6250-24 UNEF	.6250-24 UNEF	.083	.688
12	1.094	.812	.120	.150	2.125	–	.549	.781/.750	.290	.7500-20 UNEF	.7500-20 UNEF	.083	.812
12S	1.094	.812	.120	.150	2.031	–	.549	.593/.562	.290	.7500-20 UNEF	.7500-20 UNEF	.083	.812
14	1.188	.906	.120	.150	2.125	–	.665	.781/.750	.290	.8750-20 UNEF	.8750-20 UNEF	.083	.938
14S	1.188	.906	.120	.150	2.031	–	.665	.593/.562	.290	.8750-20 UNEF	.8750-20 UNEF	.083	.938
16	1.281	.969	.120	.150	2.125	2.500	.790	.781/.750	.290	1.0000-20 UNEF	1.0000-20 UNEF	.083	1.062
16S	1.281	.969	.120	.150	2.031	–	.790	.593/.562	.290	1.0000-20 UNEF	1.0000-20 UNEF	.083	1.062
18	1.375	1.062	.120	.177	2.125	2.500	.869	.781/.750	.290	1.0625-18 UNEF	1.1250-18 UNEF	.125	1.188
20	1.500	1.156	.120	.177	2.125	2.500	.994	.781/.750	.290	1.1875-18 UNEF	1.2500-18 UNEF	.125	1.312
22	1.625	1.250	.120	.177	2.125	2.500	1.119	.781/.750	.290	1.3125-18 UNEF	1.3750-18 UNEF	.125	1.438
24	1.750	1.375	.147	.177	2.125	2.500	1.244	.843/.812	.290	1.4375-18 UNEF	1.5000-18 UNEF	.125	1.562
28	2.000	1.562	.147	.177	2.125	2.500	1.465	.843/.812	.467	1.7500-18 UNS	1.7500-18 UNS	.125	1.812
32	2.250	1.750	.173	.209	2.125	2.500	1.715	.906/.875	.467	2.0000-18 UNS	2.0000-18 UNS	.125	2.062
36	2.500	1.938	.173	.209	2.125	2.500	1.930	.906/.875	.467	2.2500-16 UN	2.2500-16 UN	.125	2.312
40	2.750	2.188	.173	.209	2.125	2.500	2.145	.906/.875	.467	2.5000-16 UN	2.5000-16 UN	.125	2.562

* Consult Amphenol Aerospace for availability of shell sizes 44 and 48.

Cable Connecting Receptacle

Military (MS3451), Commercial (9441)

Amphenol Aerospace

PART NUMBER BUILDER PAGE M16

MILITARY
MS3451

COMMERCIAL 9441

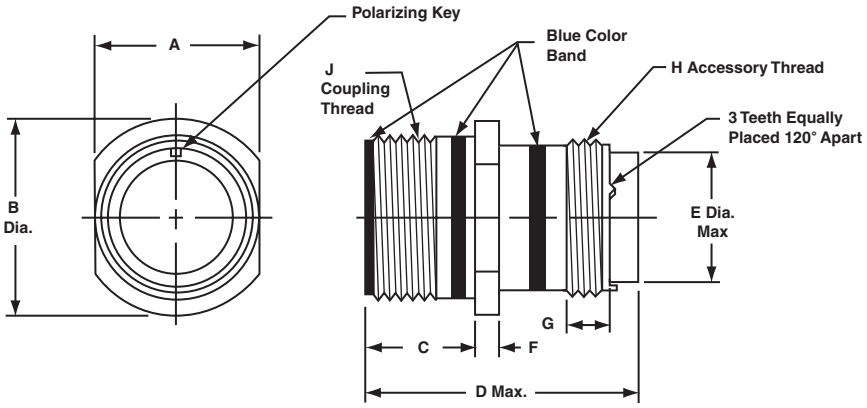

Shell Size	A	B Dia. ±.031	C	D Max.		E Dia. Max.	F ±.015	G Min.	H Thread Class 2A	J Thread Class 2A
				Size 16 & 12 Contacts	Size 8, 4, 0 Contacts					
8S	.504/.496	.729	.577/.562	2.031	–	.305	.083	.290	.5000-20 UNEF	.5000-28 UNEF
10S	.629/.621	.854	.577/.562	2.031	–	.405	.083	.290	.6250-24 UNEF	.6250-24 UNEF
10SL	.629/.621	.854	.577/.562	2.031	–	.405	.083	.290	.6250-24 UNEF	.6250-24 UNEF
12	.754/.746	.974	.765/.750	2.125	–	.549	.083	.290	.7500-20 UNEF	.7500-20 UNEF
12S	.754/.746	.974	.577/.562	2.031	–	.549	.083	.290	.7500-20 UNEF	.7500-20 UNEF
14	.879/.871	1.099	.765/.750	2.125	–	.665	.083	.290	.8750-20 UNEF	.8750-20 UNEF
14S	.879/.871	1.099	.577/.562	2.031	–	.665	.083	.290	.8750-20 UNEF	.8750-20 UNEF
16	1.005/.996	1.224	.765/.750	2.125	2.500	.790	.083	.290	1.0000-20 UNEF	1.0000-20 UNEF
16S	1.005/.996	1.224	.577/.562	2.031	–	.790	.083	.290	1.0000-20 UNEF	1.0000-20 UNEF
18	1.131/1.121	1.349	.765/.750	2.125	2.500	.869	.125	.290	1.0625-18 UNEF	1.1250-18 UNEF
20	1.256/1.246	1.474	.765/.750	2.125	2.500	.994	.125	.290	1.1875-18 UNEF	1.2500-18 UNEF
22	1.381/1.371	1.599	.765/.750	2.125	2.500	1.119	.125	.290	1.3125-18 UNEF	1.3750-18 UNEF
24	1.506/1.496	1.715	.827/.812	2.125	2.500	1.244	.125	.290	1.4375-18 UNEF	1.5000-18 UNEF
28	1.756/1.746	1.974	.827/.812	2.125	2.500	1.465	.125	.467	1.7500-18 UNS	1.7500-18 UNS
32	2.007/1.996	2.224	.890/.870	2.125	2.500	1.715	.125	.467	2.0000-18 UNS	2.0000-18 UNS
36	2.257/2.246	2.474	.890/.870	2.125	2.500	1.930	.125	.467	2.2500-16 UN	2.2500-16 UN
40	2.511/2.456	2.724	.890/.870	2.125	2.500	2.145	.125	.467	2.5000-16 UN	2.5000-16 UN

* Consult Amphenol Aerospace for availability of shell sizes 44 and 48.

Box Mounting Receptacle

Military (MS3452), Commercial (9442)

PART NUMBER BUILDER PAGE M16

MILITARY
MS3452

COMMERCIAL
9442

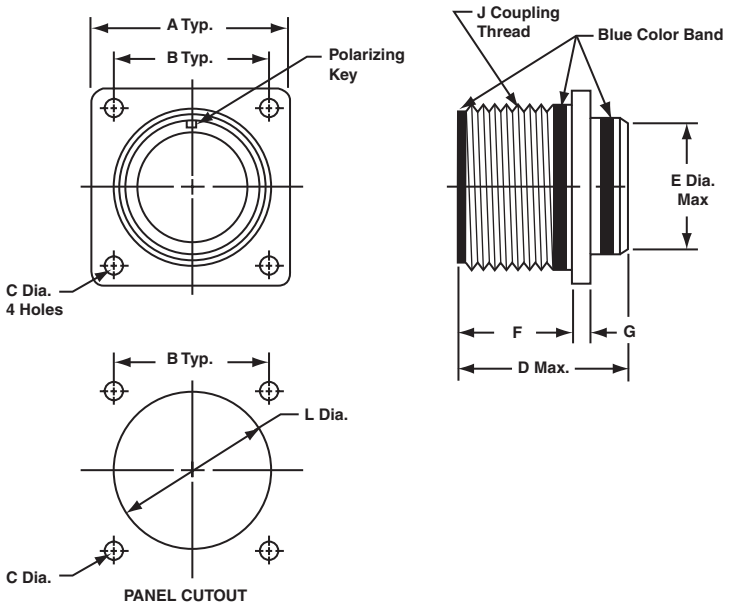

Shell Size*	A ±.031	B	C Dia.	D Max. Size 16 & 12 Contacts	D Max. Size 8, 4, 0 Contacts	E Dia. ±.016	F	G ±.015	J Thread Class 2A	L Dia. ±.010
8S	.875	.594	.130/.115	1.662	–	.500	.578/.562	.083	.5000-28 UNEF	.562
10S	1.000	.719	.130/.115	1.662	–	.625	.578/.562	.083	.6250-24 UNEF	.688
10SL	1.000	.719	.130/.115	1.662	–	.625	.578/.562	.083	.6250-24 UNEF	.688
12	1.094	.812	.130/.115	1.662	–	.750	.765/.750	.083	.7500-20 UNEF	.812
12S	1.094	.812	.130/.115	1.662	–	.750	.578/.562	.083	.7500-20 UNEF	.812
14	1.188	.906	.130/.115	1.662	–	.875	.765/.750	.083	.8750-20 UNEF	.938
14S	1.188	.906	.130/.115	1.662	–	.875	.577/.562	.083	.8750-20 UNEF	.938
16	1.281	.969	.130/.115	1.662	1.937	1.000	.765/.750	.083	1.0000-20 UNEF	1.062
16S	1.281	.969	.130/.115	1.662	–	1.000	.577/.562	.083	1.0000-20 UNEF	1.062
18	1.375	1.062	.130/.115	1.662	1.937	1.062	.765/.750	.125	1.1250-18 UNEF	1.188
20	1.500	1.156	.130/.115	1.662	1.937	1.187	.765/.750	.125	1.2500-18 UNEF	1.312
22	1.625	1.250	.130/.115	1.662	1.937	1.312	.765/.750	.125	1.3750-18 UNEF	1.438
24	1.750	1.375	.157/.142	1.662	1.937	1.437	.827/.812	.125	1.5000-18 UNEF	1.562
28	2.000	1.562	.157/.142	1.662	1.937	1.750	.827/.812	.125	1.7500-18 UNS	1.812
32	2.250	1.750	.183/.168	1.662	1.937	2.000	.988/.875	.125	2.0000-18 UNS	2.062
36	2.500	1.938	.183/.168	1.662	1.937	2.250	.988/.875	.125	2.2500-16 UN	2.312
40	2.750	2.188	.183/.168	1.662	1.937	2.500	.988/.875	.125	2.5000-16 UN	2.562

* Consult Amphenol Aerospace for availability of shell sizes 44 and 48.

Jam Nut Receptacle

Military (MS3454), Commercial (9444)

Amphenol Aerospace

PART NUMBER BUILDER PAGE M16

MILITARY MS3454

COMMERCIAL 9444

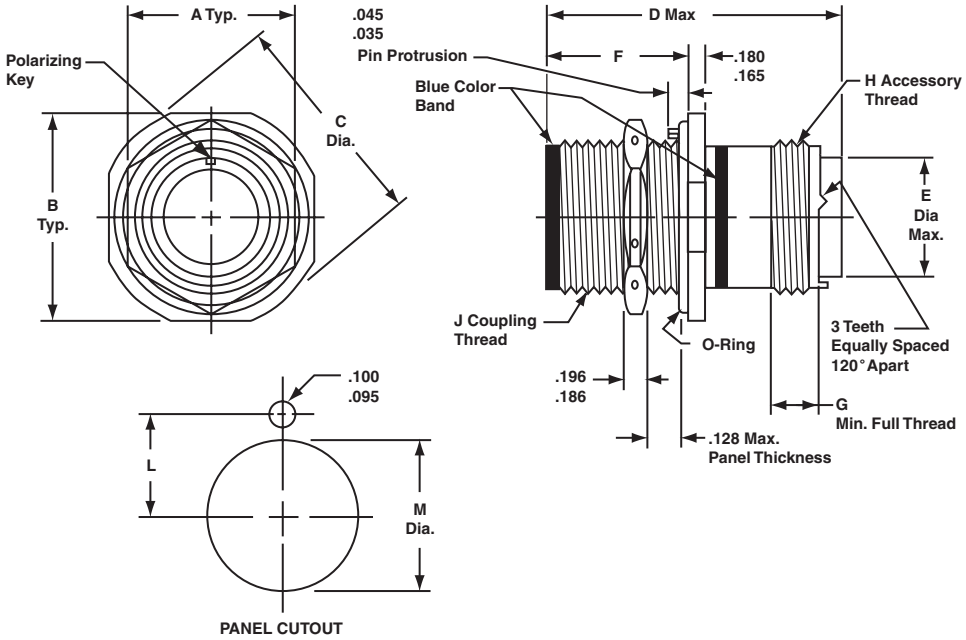

Shell Size*	A ±.010	B ±.005	C Dia. ±.005	D Max. Size 16 & 12 Contacts	D Max. Size 8, 4, 0 Contacts	E Dia. Max.	F ±.005	G Min.	H Thread Class 2A	J Thread Class 2A	Panel Cutout Dimensions L ±.005	Panel Cutout Dimensions M Dia. +.015 –.000
8S	.687	1.187	1.272	2.031	–	.305	.720	.290	.5000-20 UNEF	.5000-28 UNEF	.323	.505
10S	.812	1.312	1.397	2.031	–	.405	.720	.290	.6250-24 UNEF	.6250-24 UNEF	.385	.630
10SL	.812	1.312	1.397	2.031	–	.405	.720	.290	.6250-24 UNEF	.6250-24 UNEF	.385	.630
12	.937	1.437	1.522	2.125	–	.549	.970	.290	.7500-20 UNEF	.7500-20 UNEF	.448	.755
12S	.937	1.437	1.522	2.031	–	.549	.720	.290	.7500-20 UNEF	.7500-20 UNEF	.448	.755
14	1.125	1.562	1.647	2.125	–	.665	.970	.290	.8750-20 UNEF	.8750-20 UNEF	.510	.880
14S	1.125	1.562	1.647	2.031	–	.665	.720	.290	.8750-20 UNEF	.8750-20 UNEF	.510	.880
16	1.250	1.687	1.772	2.125	2.500	.790	.970	.290	1.0000-20 UNEF	1.0000-20 UNEF	.573	1.005
16S	1.250	1.687	1.772	2.031	–	.790	.720	.290	1.0000-20 UNEF	1.0000-20 UNEF	.573	1.005
18	1.375	1.812	1.897	2.125	2.500	.869	.970	.290	1.0625-18 UNEF	1.1250-18 UNEF	.635	1.130
20	1.500	1.937	2.022	2.125	2.500	.994	.970	.290	1.1875-18 UNEF	1.2500-18 UNEF	.698	1.255
22	1.625	2.156	2.241	2.125	2.500	1.119	.970	.290	1.3125-18 UNEF	1.3750-18 UNEF	.760	1.380
24	1.750	2.281	2.366	2.125	2.500	1.244	.970	.290	1.4375-18 UNEF	1.5000-18 UNEF	.823	1.505
28	2.000	2.531	2.616	2.125	2.500	1.465	.970	.467	1.7500-18 UNS	1.7500-18 UNS	.948	1.755
32	2.375	2.781	2.866	2.125	2.500	1.715	.970	.467	2.0000-18 UNS	2.0000-18 UNS	1.073	2.005
36	2.625	3.031	3.116	2.125	2.500	1.930	.970	.467	2.2500-16 UN	2.2500-16 UN	1.198	2.255
40	2.875	3.281	3.366	2.125	2.500	2.145	.970	.467	2.5000-16 UN	2.5000-16 UN	1.323	2.505

* Consult Amphenol Aerospace for availability of shell sizes 44 and 48.

Straight Plug

Military (MS3456), Commercial (9446)

PART NUMBER BUILDER PAGE M16

MILITARY
MS3456

COMMERCIAL **9446**

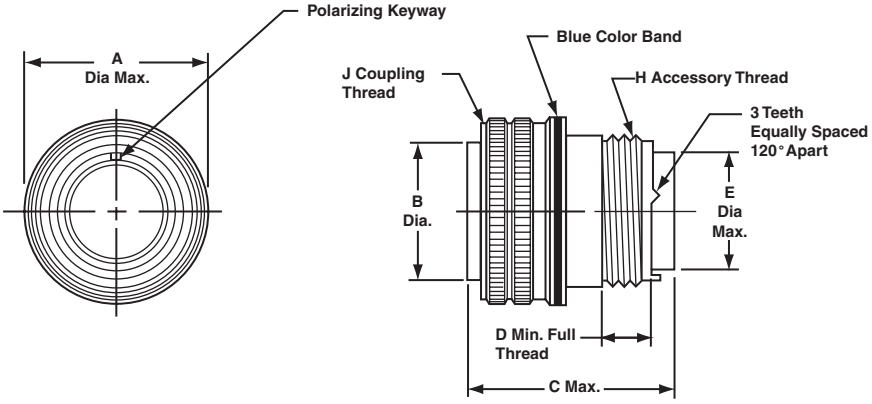

Shell Size*	A Dia. Max.	B Dia. ±.005	C Max.		D Min.	E Dia. Max.	H Thread Class 2A	J Thread Class 2B
			Size 16 & 12 Contacts	Size 8, 4, 0 Contacts				
8S	.844	.360	2.031	–	.290	.305	.5000-20 UNF	.5000-28 UNEF
10S	.969	.435	2.031	–	.290	.405	.6250-24 UNEF	.6250-24 UNEF
10SL	.969	.441**	2.031	–	.290	.405	.6250-24 UNEF	.6250-24 UNEF
12	1.062	.550	2.125	–	.290	.549	.7500-20 UNEF	.7500-20 UNEF
12S	1.062	.550	2.031	–	.290	.549	.7500-20 UNEF	.7500-20 UNEF
14	1.156	.670	2.125	–	.290	.665	.8750-20 UNEF	.8750-20 UNEF
14S	1.156	.670	2.031	–	.290	.665	.8750-20 UNEF	.8750-20 UNEF
16	1.250	.800	2.125	2.500	.290	.790	1.0000-20 UNEF	1.0000-20 UNEF
16S	1.250	.800	2.031	–	.290	.790	1.0000-20 UNEF	1.0000-20 UNEF
18	1.344	.925	2.125	2.500	.290	.869	1.0625-18 UNEF	1.1250-18 UNEF
20	1.469	1.045	2.125	2.500	.290	.994	1.1875-18 UNEF	1.2500-18 UNEF
22	1.594	1.170	2.125	2.500	.290	1.119	1.3125-18 UNEF	1.3750-18 UNEF
24	1.719	1.295	2.125	2.500	.290	1.244	1.4375-18 UNEF	1.5000-18 UNEF
28	1.969	1.515	2.125	2.500	.467	1.465	1.7500-18 UNS	1.7500-18 UNS
32	2.219	1.765	2.125	2.500	.467	1.715	2.0000-18 UNS	2.0000-18 UNS
36	2.469	1.975	2.125	2.500	.467	1.930	2.2500-16 UN	2.2500-16 UN
40	2.719	2.225	2.125	2.500	.467	2.145	2.5000-16 UN	2.5000-16 UN

* Consult Amphenol Aerospace for availability of shell sizes 44 and 48.
** Tolerance on this dimension is +.000 –.006

Straight Plug with Self-locking Coupling Nut

Military (MS3459), Commercial (9816)

Amphenol Aerospace

PART NUMBER BUILDER PAGE M16

MILITARY MS3459

COMMERCIAL 9816

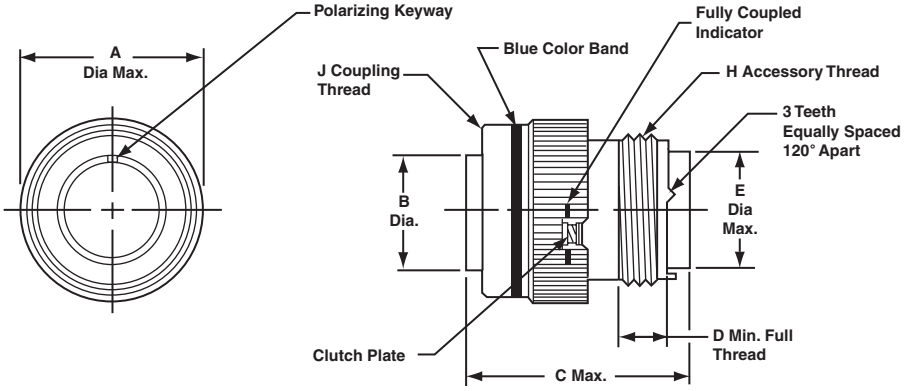

Shell Size*	A Dia. Max.	B Dia. ±.005	C Max. Size 16 & 12 Contacts	C Max. Size 8, 4, 0 Contacts	D Min.	E Dia. Max.	H Thread Class 2A	J Thread Class 2B
8S	.963	.360	1.510	–	.290	.305	.5000-20 UNEF	.5000-28 UNEF
10S	1.088	.435	1.510	–	.290	.405	.6250-24 UNEF	.6250-24 UNEF
10SL	1.088	.441**	1.510	–	.290	.405	.6250-24 UNEF	.6250-24 UNEF
12	1.213	.550	1.780	–	.290	.549	.7500-20 UNEF	.7500-20 UNEF
12S	1.213	.550	1.510	–	.290	.549	.7500-20 UNEF	.7500-20 UNEF
14	1.358	.670	1.780	–	.290	.665	.8750-20 UNEF	.8750-20 UNEF
14S	1.358	.670	1.510	–	.290	.665	.8750-20 UNEF	.8750-20 UNEF
16	1.463	.800	1.780	2.500	.290	.790	1.0000-20 UNEF	1.0000-20 UNEF
16S	1.463	.800	1.510	–	.290	.790	1.0000-20 UNEF	1.0000-20 UNEF
18	1.588	.925	1.850	2.500	.290	.869	1.0625-18 UNEF	1.1250-18 UNEF
20	1.713	1.045	1.850	2.500	.290	.994	1.1875-18 UNEF	1.2500-18 UNEF
22	1.788	1.170	1.850	2.500	.290	1.119	1.3125-18 UNEF	1.3750-18 UNEF
24	1.963	1.295	1.850	2.500	.290	1.244	1.4375-18 UNEF	1.5000-18 UNEF
28	2.213	1.515	1.850	2.500	.467	1.465	1.7500-18 UNS	1.7500-18 UNS
32	2.463	1.765	1.850	2.500	.467	1.715	2.0000-18 UNS	2.0000-18 UNS
36	2.713	1.975	1.850	2.500	.467	1.930	2.2500-16 UN	2.2500-16 UN
40	2.963	2.225	1.850	2.500	.467	2.145	2.5000-16 UN	2.5000-16 UN

* Consult Amphenol Aerospace for availability of shell sizes 44 and 48.

** Tolerance on this dimension is +.000 –.006

Quick Disconnect Plug, with/without Lanyard

Commercial (9817)

PART NUMBER BUILDER PAGE M16

COMMERCIAL

9818
9817

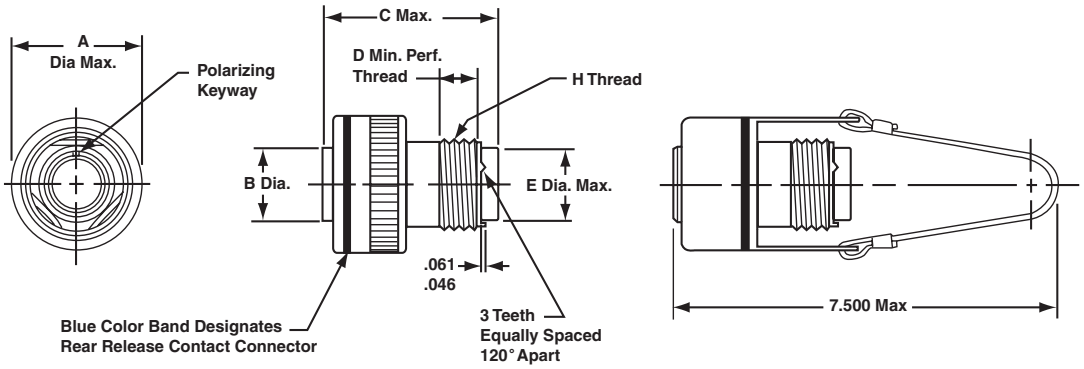

9818 CONNECTOR **9817 CONNECTOR WITH LANYARD**

Shell Size*	A Dia. Max.	B Dia.	C Max. Size 16 & 12 Contacts	C Max. Size 8, 4, 0 Contacts	D Min.	E Dia. Max.	H Thread Class 2A	Amphenol/ Matrix Part Number for Adapter Ring
8S	1.087	.360	2.031	–	.290	.305	.5000-20 UNF	2500-008-0X08
10S	1.224	.435	2.031	–	.290	.405	.6250-24 UNEF	2500-008-0X10
10SL	1.224	.441	2.031	–	.290	.405	.6250-24 UNEF	2500-008-0X10
12	1.355	.550	2.125	–	.290	.549	.7500-20 UNEF	2500-008-0X12
12S	1.355	.550	2.031	–	.290	.549	.7500-20 UNEF	2500-008-0X13
14	1.482	.670	2.125	–	.290	.665	.8750-20 UNEF	2500-008-0X14
14S	1.482	.670	2.031	–	.290	.665	.8750-20 UNEF	2500-008-0X15
16	1.609	.800	2.125	2.500	.290	.790	1.0000-20 UNEF	2500-008-0X16
16S	1.609	.800	2.031	–	.290	.790	1.0000-20 UNEF	2500-008-0X17
18	1.817	.925	2.125	2.500	.290	.869	1.0625-18 UNEF	2500-008-0X18
20	1.942	1.045	2.125	2.500	.290	.994	1.1875-18 UNEF	2500-008-0X20
22	2.075	1.170	2.125	2.500	.290	1.119	1.3125-18 UNEF	2500-008-0X22
24	2.203	1.295	2.125	2.500	.290	1.244	1.4375-18 UNEF	2500-008-0X24
28	2.516	1.515	2.125	2.500	.467	1.465	1.7500-18 UNS	2500-008-0X28
32	2.735	1.765	2.125	2.500	.467	1.715	2.0000-18 UNS	2500-008-0X32
36	3.015	1.975	2.125	2.500	.467	1.930	2.2500-16 UN	2500-008-0X36
40	3.306	2.225	2.125	2.500	.467	2.145	2.5000-16 UN	2500-008-0X40

* Consult Amphenol Aerospace for availability of shell sizes 44 and 48.
Receptacle Adapter Ring

Required to mate the quick disconnect plug with receptacle. Not furnished with the quick disconnect plug and must be ordered separately.
Note: Use Locktite Material on the threads for a permanent installation to the shell. How to Order Adapter Ring

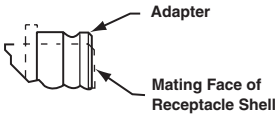

Part Number
2500-008-0 X XX

Shell Size (varies from connector shell size designation, see last column of table at left)

Finish
0 - Electroless Nickel
1 - Black Anodize
2 - Cadmium/Olive Drab
3 - Stainless Steel, Passivated

Contact Information, Sealing Plugs, Crimping and Insertion/Removal Tools

Amphenol Aerospace

MS/STANDARD CRIMP REAR RELEASE CONTACTS

Contact Size	Wire Range		Socket Contacts		Pin Contacts	
	AWG	mm²	Military Part Number	Amphenol/Matrix Part Number	Military Part Number	Amphenol/Matrix Part Number
16S*	20–16	0.5–1.4	M39029/30-217	M5100-033-1601L	M39029/29-212	M5000-029-0016L
16	20–16	0.5–1.4	M39029/30-218	M5100-033-1602L	M39029/29-212	M5000-029-0016L
12	14–12	2–3	M39029/30-219	M5100-033-0012	M39029/29-213	M5000-029-0012
8	10–8†	5–8.5	M39029/30-220	M5100-033-0008	M39029/29-214	M5000-029-0008
4	6–4†	13–21	M39029/30-221	M5100-033-0004	M39029/29-215	M5000-029-0004
0	2–0†	34–60	M39029/30-222	M5100-033-0000	M39029/29-216	M5000-029-0000

* Shorter wire barrel

† Use MS3348 bushing kit to accommodate smaller wire.

Note: For information on thermocouple contacts, consult Amphenol Aerospace

CONTACT CURRENT RATING AND RETENTION

Contact Size**	Current Rating			Contact Retention	
				Axial Load	
	Amperes Max.	RADSOK Amps Max.	Voltage Drops Millivolts	lb.	N
16	13	N/A	50	25	111.2
12	23	N/A	50	30	133.4
8	46	70	25	50	222.4
4	80	120	14	60	266.9
0	150	150	12	75	333.6

** Organize individual circuits to maintain heat rise within operating temperature requirements.

SEALING PLUGS

Contact Size	Sealing Plugs	
	Military Part Number	Amphenol/Matrix Part Number
16S	MS27488-16-3	10-405996-163
16	MS27488-16-3	10-405996-163
12	MS27488-12-3	10-405996-123
8	MS27488-8-3	10-405996-083
4	MS27488-4-3	10-405996-043
0	MS27488-0-3	10-405996-003

CRIMPING TOOLS

Contact Size	Wire Range		Finished Wire Dia. Range		Color Code	Crimping Tool Part Number	Turret or Positioner Part Number
	AWG	mm²	Inch	mm			
16S	20–16	0.5–1.4	.053–.103	1.34–2.62	Red/White	M22520/1-01	M22520/1-02
16	20–16	0.5–1.4	.053–.103	1.34–2.62	Blue/White	M22520/1-01	M22520/1-02
12	14–12	2–3	.085–.158	2.15–4.01	Yell./White	M22520/1-01	M22520/1-02
8	10–8	5–8.5	.132–.255	3.35–6.48	White/Red	M22520/23-01	M22520/23-02
4	6–4	13–21	.237–.370	6.01–9.40	White/Blue	M22520/23-01	M22520/23-04
0	2–0	34–60	.360–.550	9.14–13.97	White/Yell.	M22520/23-01	M22520/23-05

INSERTION/REMOVAL TOOLS

Contact Size	Color Code	Military Part Number	Amphenol/Matrix Part Number
16	Blue/White	M81969/14-03	10-538988-016
12	Yellow/White	M81969/14-04	10-538988-012
8	Red	M81969/14-06	6500-018-0008
4	Blue	M81969/14-07	6500-018-0004
0	Yellow	M81969/14-08	6500-018-0000

Amphenol installation instructions, L-2106, gives information on insertion, removal and crimping of contacts for Matrix MIL-DTL-5015 connectors.

Accessories

Protection Caps – Plug

PLUG PROTECTION CAP 10-329393-

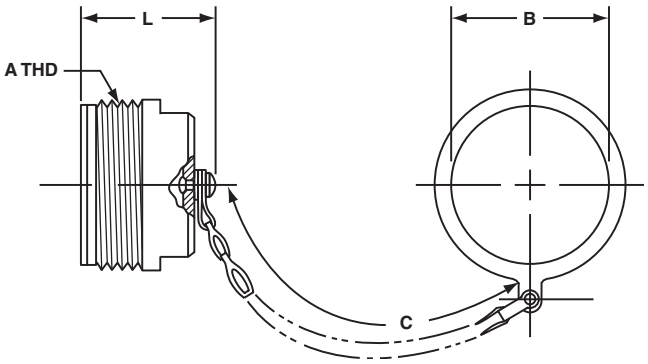

PLUG PROTECTION CAP MS25042-XXDA*

Assembly Number	A Thread Class 2A	B Dia. +.010 –.000	C Approx.	L Max.
10-329393-10 (*)	.625-24UNEF	.641	3.5	1.312
10-329393-11(*)	.625-24UNEF	.641	3.5	1.312
10-329393-12(*)	.750-20UNEF	.766	3.5	1.500
10-329393-14(*)	.875-20UNEF	.891	3.5	1.500
10-329393-16(*)	1.000-20UNEF	1.016	3.5	1.500
10-329393-18(*)	1.125-18UNEF	1.141	3.5	1.500
10-329393-20(*)	1.250-18UNEF	1.266	4.0	1.500
10-329393-22(*)	1.375-18UNEF	1.391	4.0	1.500
10-329393-24(*)	1.500-18UNEF	1.641	4.5	1.500
10-329393-28(*)	1.750-18UNS	1.891	4.5	1.500
10-329393-32(*)	2.000-18UNS	2.078	5.0	1.500
10-329393-36(*)	2.250-16UN	2.328	5.0	1.500
10-329393-40(*)	2.500-16UN	2.641	5.0	1.500

* 3 = OD Cadmium Plating
G = Electroless Nickel Plating

Assembly Number	A Thread Class 2A	B Dia. +.010 –.000	C Approx.	L Max.
10-329393-44(*)	2.750-16UN	2.891	6.0	1.500

XX*

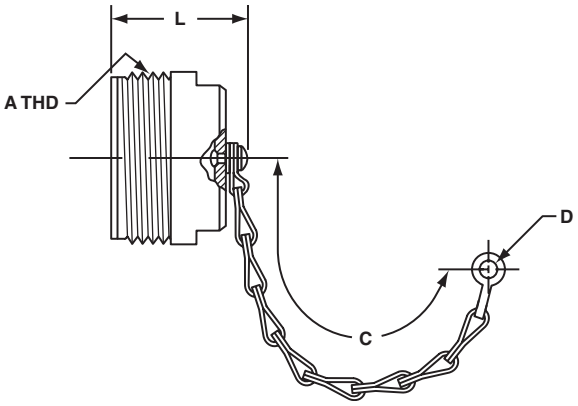

Assembly Number	A Thread Class 2A	C Approx.	D Ref.	L Max.
10-229125-10	.625-24NEF	3.0	.140	1.233
10-229125-12	.750-20UNEF	3.5	.140	1.421
10-229125-14	.875-20UNEF	3.5	.140	1.421
10-229125-16	1.000-20UNEF	3.5	.140	1.421
10-229125-18	1.125-18NEF	3.5	.140	1.421
10-229125-20	1.250-18NEF	3.5	.193	1.421
10-229125-22	1.375-18NEF	3.5	.193	1.421
10-229125-24	1.500-18NEF	4.5	.193	1.421

Assembly Number	A Thread Class 2A	C Approx.	D Ref.	L Max.
10-229125-28	1.750-18NS	4.5	.193	1.421
10-229125-32	2.000-18NS	5.0	.193	1.421
10-229125-36	2.250-16UN	5.0	.193	1.421
10-229125-40	2.500-16UN	5.0	.193	1.421

PLUG PROTECTION CAP 10-229125-XX*

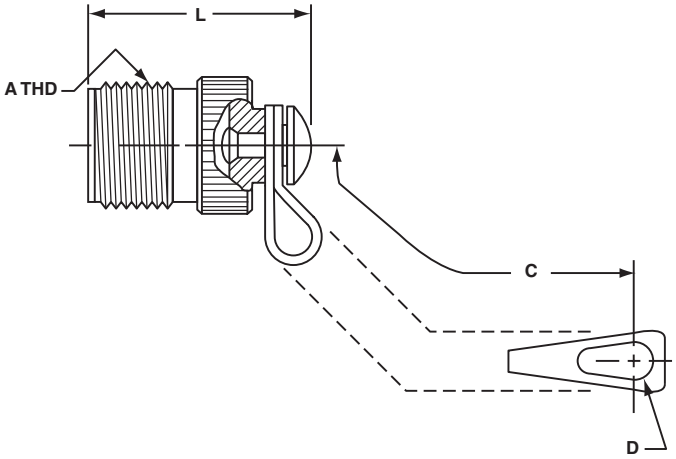

MS Number	A Thread Class 2A	B Dia. +.010 –.005	C Approx.	L Max.
MS25042-8DA	.500-28UNEF	.156	4.00	.969
MS25042-10DA	.625-24UNEF	.156	4.00	.969
MS25042-12DA	.750-20UNEF	.156	4.50	1.156
MS25042-14DA	.875-20UNEF	.156	4.50	1.156
MS25042-16DA	1.000-20UNEF	.156	4.50	1.156
MS25042-18DA	1.125-18UNEF	.156	4.50	1.156
MS25042-20DA	1.250-18UNEF	.187	5.00	1.156
MS25042-22DA	1.375-18UNEF	.187	5.00	1.156
MS25042-24DA	1.500-18UNEF	.187	5.50	1.156
MS25042-28DA	1.750-18UNS	.187	7.75	1.156
MS25042-32DA	2.000-18UNS	.218	7.75	1.156
MS25042-36DA	2.250-16UN	.218	7.75	1.156
MS25042-40DA	2.500-16UN	.218	7.75	1.156

* Protective caps are illustrated with sash chains and are available with beaded chains or without chains. Optional terminations are also available. Consult Amphenol Aerospace when ordering.

Protection Caps – Receptacle

Amphenol Aerospace

RECEPTACLE PROTECTION CAP MS25043-XXDA*

Assembly Number	A Thread Class 2B	B Dia. Min.	C Approx.	D Dia. Max.	L Max.
10-329394-10	.625-24UNEF	.641	3.5	.875	.793
10-329394-12	.750-20UNEF	.766	3.5	1.000	.793
10-329394-14	.875-20UNEF	.891	3.5	1.125	.793
10-329394-16	1.000-20UNEF	1.016	3.5	1.250	.793
10-329394-18	1.125-18UNEF	1.094	3.5	1.375	1.024
10-329394-20	1.250-18UNEF	1.203	4.0	1.500	1.024
10-329394-22	1.375-18UNEF	1.343	4.0	1.625	1.024
10-329394-24	1.500-18UNEF	1.453	4.5	1.750	1.024
10-329394-28	1.750-18UNS	1.766	4.5	2.000	1.024
10-329394-32	2.000-18UNS	2.016	5.0	2.250	1.024
10-329394-36	2.250-16UN	2.266	5.0	2.500	1.024
10-329394-40	2.500-16UN	2.516	5.0	2.656	1.024
10-329394-44	2.750-16UN	2.766	6.0	2.938	1.024

RECEPTACLE PROTECTION CAP 10-329394-XX*

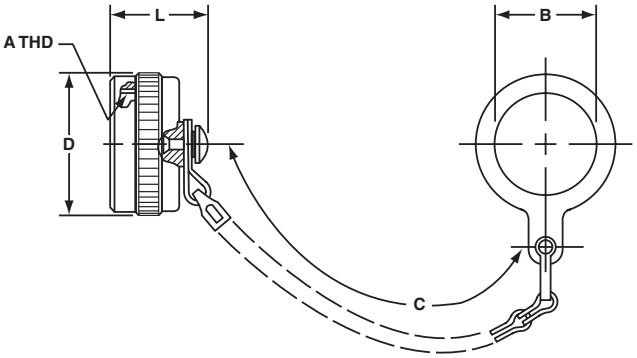

Assembly Number	A Thread Class 2B	B Ref.	C Approx.	D Dia. Max.	L Max.
10-422905-103	.625-24UNEF	.140	3.0	.875	.812
10-422905-123	.750-20UNEF	.140	3.5	1.000	.812
10-422905-143	.875-20UNEF	.140	3.5	1.125	.812
10-422905-163	1.000-20UNEF	.140	3.5	1.250	.812
10-422905-183	1.125-18UNEF	.193	3.5	1.375	1.031
10-422905-203	1.250-18UNEF	.193	4.0	1.500	1.031
10-422905-223	1.375-18UNEF	.193	4.0	1.625	1.031
10-422905-243	1.500-18UNEF	.193	4.5	1.750	1.031
10-422905-283	1.750-18UNS	.193	4.5	2.000	1.031
10-422905-323	2.000-18UNS	.193	5.0	2.250	1.031

RECEPTACLE PROTECTION CAP 10-422905-

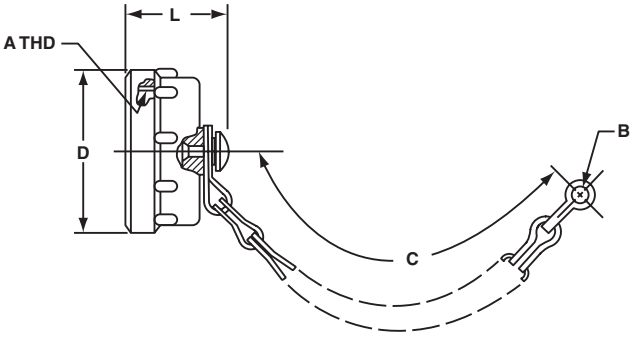

Assembly Number	A Thread Class 2B	B Ref.	C Approx.	D Dia. Max.	L Max.
10-422905-363	2.250-16UN	.193	5.0	2.500	1.031
10-422905-403	2.500-16UN	.193	5.0	2.656	1.031

MS Number	A Thread Class 2B	B +.010 –.005	C Approx.	D Dia. Max.	L Max.
MS25043-8DA	.500-28UNEF	.140	4.00	.688	.750
MS25043-10DA	.625-24UNEF	.140	4.00	.815	.750
MS25043-12DA	.750-20UNEF	.140	4.50	1.000	.750
MS25043-14DA	.875-20UNEF	.140	4.50	1.125	.750
MS25043-16DA	1.000-20UNEF	.140	4.50	1.188	.750
MS25043-18DA	1.125-18UNEF	.140	4.50	1.344	.750
MS25043-20DA	1.250-18UNEF	.140	5.00	1.469	.750
MS25043-22DA	1.375-18UNEF	.140	5.00	1.594	.750
MS25043-24DA	1.500-18UNEF	.171	5.50	1.719	.750
MS25043-28DA	1.750-18UNS	.171	7.75	1.969	.812
MS25043-32DA	2.000-18UNS	.187	7.75	2.219	.812
MS25043-36DA	2.250-16UN	.187	7.75	2.469	.812
MS25043-40DA	2.500-16UN	.187	7.75	2.719	.812

XXX*

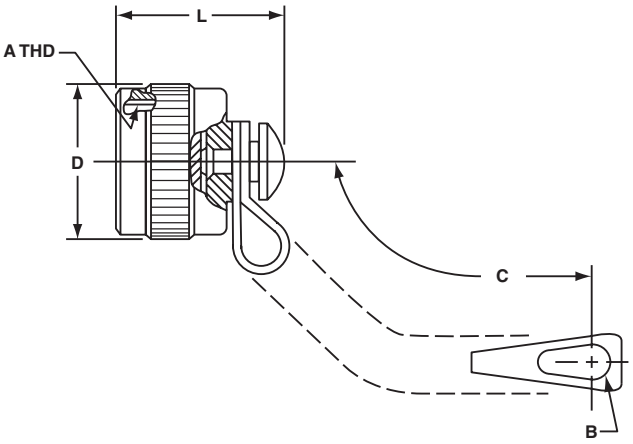

* Protective caps are illustrated with sash chains and are available with beaded chains or without chains. Optional terminations are also available. Consult Amphenol Aerospace when ordering.

MIL-DTL-5015 Accessories

Dust Caps

10-70500 RECEPTACLE DUST CAP FOR EXTERNAL THREADS

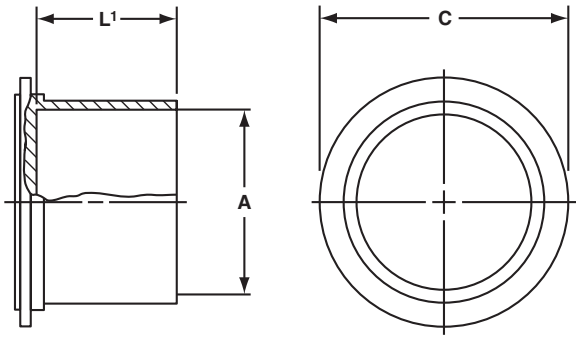

MS Shell Size	Order Number	A Dia. Nominal Thread	C Dia. ±.031	L[1] ±.062
8S	10-70500-8	.500	.750	.500
10S	10-70500-10	.625	.875	.500
10SL	10-70500-10	.625	.875	.500
12S	10-70500-12	.750	1.000	.500
12	10-70500-12	.750	1.000	.500
14S	10-70500-14	.875	1.125	.500
14	10-70500-14	.875	1.125	.500
16S	10-70500-16	1.000	1.250	.500
16	10-70500-16	1.000	1.250	.500
18	10-70500-18	1.125	1.375	.562
20	10-70500-20	1.250	1.500	.562
22	10-70500-22	1.375	1.625	.562
24	10-70500-24	1.500	1.750	.562
28	10-70500-28	1.750	1.938	.562
32	10-70500-32	2.000	2.250	.562
36	10-70500-36	2.250	2.500	.625
40	10-70500-40	2.500	2.750	.625

10-70506 PLUG DUST CAP FOR INTERNAL THREADS

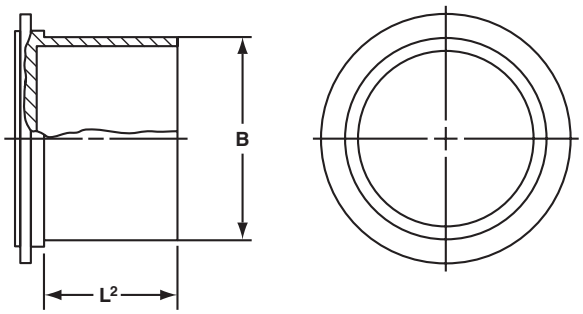

MS Shell Size	Order Number	B Dia. Min.	L[2] ±.125
8S	10-70506-8S	.469	.625
10S	10-70506-10S	.587	.625
10SL	10-70506-10S	.587	.625
12S	10-70506-12	.704	.625
12	10-70506-12	.704	.625
14S	10-70506-14	.828	.625
14	10-70506-14	.828	.625
16S	10-70506-16	.953	.625
16	10-70506-16	.953	.625
18	10-70506-18	1.072	.625
20	10-70506-20	1.197	.625
22	10-70506-22	1.322	.625
24	10-70506-24	1.447	.625
28	10-70506-28	1.697	.625
32	10-70506-32	1.947	.625
36	10-70506-36	2.190	.625
40	10-70506-40	2.440	.625

Notes

Notes

Amphenol

Amphenol Aerospace Operations
40-60 Delaware Avenue
Sidney, NY 13838
800-678-0141

Amphenol Commercial Air Division
40-60 Delaware Avenue
Sidney, NY 13838
1-800-687-0141

Amphenol Nexus Technologies
50 Sunnyside Avenue
Stamford, CT 06902
203-327-7300

Amphenol PCD
72 Cherry Hill Drive
Beverly, MA 01915
978-624-3400

Amphenol SV Microwave
2400 Centrepark West Drive
West Palm Beach, FL
561-840-1800

Amphenol Times Microwave, Inc.
358 Hall Avenue
Wallingford, CT 06492
800-867-2629

Amphenol Fiber Systems International
1300 Central Expressway North, Suite 100
Allen, TX 75013
214-547-2400

Amphenol Borisch Technologies
4511 East Paris AVE
Grand Rapids, MI 49512
616-554-9820

Amphenol Printed Circuits
91 Northeastern Boulevard
Nashua, NH 03062
603-324-4500

Amphenol Canada
605 Milner Avenue
Toronto, ON Canada M1B 5X6
416-291-4401

Amphenol Invotec
Unit 1-3, Hedging Lane Industrial Estate
Dosthill, Tamworth, B77 5HH United Kingdom
+44 (0) 1827 263250

Amphenol Ionix Systems
Prospect House, Taylor Business Park
Risley, Warrington, WA3 6HP United Kingdom
+44 (0) 1942 685200

Amphenol Limited
Thanet Way
Whitstable, Kent, CT5 3JF United Kingdom
+44 (0) 1227 773200

Amphenol Socapex
948 Promenade De L'Arve – BP 29
74311 Thyez France
+33 (0) 4 50 89 28 00

Amphenol Air LB SAS
2 Rue Clément Ader, Zac de Wé
08110 Carignan France
+33 (0) 03 24 22 78 49

Amphenol AirLB GmbH
Am Kleinbahnhof 4
D-66740 Saarlouis Germany
+49 (0) 68 31/98 10 0

Amphenol SEFEE
Z.I. des Cazes – BP243
12402 Saint-Affrique Cedex France
+33 (0) 5 65 98 11 00

Amphenol Interconnect India
105, Bhosari Industrial Area
Pune – 411 026 India
+91 20 27120363

Amphenol Japan, Ltd.
471-1, Deba, Ritto-City
Shiga, 520 3041 Japan
+81 77 553 8501

Amphenol Martec Limited
St. Augustines Business Park
Swalecliffe, Whitstable, Kent
CT5 2QJ United Kingdom
+44 (0) 1227 793 733

Amphenol Optimize
Carretera Internacional Km 6.5
Col. Parque Industrial
Nogales, Sonora, México. C.P. 84094
+52 (631) 311-160

Amphenol Ionix Systems OÜ
Pikk Street 59b
Kuressaare 93815 Estonia
+372 4521 780

AMAO – European Sales Operations
Via Barbaiana 5
20020 Lainate Milano, Italy
+39 02 932 541

Amphenol Bar-Tec Ltd.
3 Hagavish st
POB 2479 Kfar-Saba 44641
Israel
+972-9-7644100

Notice: Specifications are subject to change without notice. Contact your nearest Amphenol Corporation Sales Office for the latest specifications. All statements, information and data given herein are believed to be accurate and reliable but are presented without guarantee, warranty, or responsibility of any kind expressed or implied. Statements or suggestions concerning possible use of our products are made without representation or warranty that any such use is free of patent infringement and are not recommendations to infringe any patent. The user should not assume that all safety measures are indicated or that other measures may not be required. Specifications are typical and may not apply to all connectors. © 2019 Amphenol Corp. Printed in U.S.A. 1-2019

AMPHENOL CORPORATION
40-60 Delaware Avenue, Sidney, NY 13838-1395 • 800-678-0141
www.amphenol-aerospace.com • www.amphenolmao.com