MIL-DTL-38999, Series I LJT, II JT, III TV

Insert Availability and Identification Chart

Series JT II	Series LJT I	Series TV III	Military TV III	JT/LJT Solder	Crimp	Hermetics Class H	Hermetics Class Y	Hermetics TV*	Service Rating	Total Contacts	Contact Size 22D	22M	22	20	16	12	12 (Coax)	10 (Power)	8 (Coax)	8†† (Twinax)
8-2■				P					M	2				2						
8-3■				X	NA	P	P		M	3				3						
	9-3■			X																
		9-5★■							Grounded	1										1
8-6				X	X	P	P		M	6		6								
	9-6			X	X	P	P													
	9-7■			X					M	7		7								
	9-22■			X					I	2				2						
8-35					X	P	P		M	6	6									
	9-35	9-35	A35		X	P	P	P												
8-44					X	P	P		M	4			4							
	9-44				X															
		9-94 ■			✦				M	2				2						
8-97■				X					M	4		2		2						
8-98				S	X	P	P		I	3				3						
	9-98	9-98	A98	X	X	P	P	P												
	11-2★	11-2★	B2		X	P**			I	2					2					
10-4					3				I	4				4						
	11-4	11-4		X	S/2															
10-5				X	X	P	P		I	5				5						
	11-5	11-5	B5	X	X			P												
	11-6■			S					I	6				6						
10-13				X	X	P/S	P/S		M	13		13								
	11-13			X	X	P/S	P/S													
10-35					X	P/S	P/S		M	13	13									
	11-35	11-35	B35		X	P/S	P/S	P												
		11-54 ■			X ✦				II	4	4									
10-98				X	X	P/S	P/S		I	6				6						
	11-98	11-98	B98	X	X	P/S	P/S	P												
10-99					X	P	P		I	7				7						
	11-99	11-99	B99		P X			P												
12-3				X	X ✦	P	P		II	3					3					
	13-3■				P															
12-4				X	X	P	P		I	4					4					
	13-4★	13-4★	C4	X	X	P	P	P												
12-8				X	X	P	P		I	8				8						
	13-8	13-8	C8	X	X	P	P	P												
		13-13■							I, Fiber Optic	4					2**	2				
12-22					X	P/S	P/S		M	22		22								
	13-22			X	X	P/S	P/S													
12-35					X	P/S	P/S		M	22	22									
	13-35	13-35	C35		X	P/S	P/S	P												
		13-63■			✦				I	4					2	2				
12-98				X	X	P/S	P/S		I	10				10						
	13-98	13-98	C98	X	X	P/S	P/S	P												
14-4■					2				I	4						4				
	15-4■	15-4■			2 ✦															
14-5				X	X	P	P		II	5					5					
	15-5★	15-5★	D5	X	X	P	P	P												
14-15				X	X	P	P		I	15				14	1					
	15-15	15-15	D15	X	X	P/S	P/S	P	I	15				14	1					

X Completely tooled.
• Majority of tooling is completed (contact Amphenol Aerospace for availability).
✦ Not tooled for 02-R.
P Available with Pin contacts only
S Available with Socket contacts only
P/S Available with Pin contacts or Socket contacts
★ Ground plane proprietary option available. Arrg. 9-5 is exclusively ground plane type.
■ Not Mil-Qualified.
✧ 21-75 is Mil-Qualified with twinax contacts only.
Note: MS connector 21-75 is supplied with size 8 twinax.
Commercial connector 21-75 is supplied with size 8 coax.

* Hermetic inserts - solder termination standard. (Contact Amphenol Aerospace for optional PCB or eyelet termination).
** Two size 16 contacts dedicated to fiber optics. See the Fiber Optic section for more information.
*** For use in MIL-STD-1760 applications (see pages 40 & 41).
† For RG 180/U and RG 195/U cables only.
†† Size 8 Coax and Twinax are interchangeable.
(2) Not Tooled for RP or 02RE
(3) Pin inserts only, not tooled for RP or 02RE (Consult Sidney, NY for avail.)
(5) MS Connector 21-79 has provision for two size 8 coax contacts. Coax contacts are not supplied unless specified by customer.

MIL-DTL-38999, Series I LJT, II JT, III TV

Insert Availability and Identification Chart

Amphenol Aerospace

Series	Series	Series	Military	JT/LJT		Hermetics					Contact Size									
JT II	LJT I	TV III	TV III	Solder	Crimp	Class H	Class Y	TV*	Service Rating	Total Contacts	22D	22M	22	20	16	12	12 (Coax)	10 (Power)	8 (Coax)	8†† (Twinax)
14-18				X	X	P/S	P/S		I	18				18						
	15-18	15-18	D18	X	X	P/S	P/S	P												
14-19■				X	X				I	19				19						
	15-19	15-19	D19		X	P	P	P												
14-35					X	P	P		M	37	37									
	15-35	15-35	D35		X	P/S	P/S	P												
14-37				X	X	P	P		M	37		37								
	15-37			X	X	P	P													
14-68■					2	P	P		1	8					8					
	15-68■			X	2															
14-97■					X	P	P		I	12				8	4					
	15-97	15-97	D97	X	X	P	P	P												
	17-2	17-2	E2		X ✦				M	39	38									1
16-6					X	P	P		I	6						6				
	17-6	17-6	E6		X	P	P	P												
16-8				X	X	P	P		II	8					8					
	17-8★	17-8★	E8	X	X	P/S	P/S	P												
16-13■					2				I	13					13					
	17-13■				2															
	17-22■	17-22★■			✦				Coax	4							2		2	
	17-25■				2				M	24	22								2	
16-26				X	X	P/S	P/S		I	26				26						
	17-26	17-26	E26	X	X	P/S	P/S	P												
16-35					X	P	P		M	55	55									
	17-35	17-35	E35	X	X	P	P	P												
16-42					X				M	42			42							
	17-42■				P															
		17-52■			X ✦				M	2										2
16-55				X	X	P/S	P/S		M	55		55								
	17-55			X	X	P/S	P/S													
		17-60■			X				I/Coax	10	8								2	
16-99				X	X	P	P		I	23				21	2					
	17-99	17-99	E99	X	X	P	P													
		19-AD■			X ✦				Inst.	17				16						1
18-11				X	X	P	P		II	11					11					
	19-11★	19-11★	F11	X	X	P	P	P												
	19-18	19-18	F18		2 X				M	18	14									4
18-28				X	X				I	28				26	2					
	19-28■	19-28	F28	X	P X															
18-30				X	X				I	30				29	1					
	19-30■			X	P															
		19-31 ■			X				M	15	12					1			2	
18-32				X	X	P/S	P/S		I	32				32						
	19-32	19-32	F32	X	X	P/S	P/S	P												
18-35					X	P	P		M	66	66									
	19-35	19-35	F35		X	P	P	P												
18-53				X	X				M	53			53							
	19-53■				P															
18-66				X	X	P	P		M	66		66								
	19-66				X	P	P													
	19-67■			X	3	S	S		M	67		67								
18-68■					2				I	18					18					
	19-68■				3															
18-96■					2				I	9						9				
20-1					X	P	P		M	79		79								
	21-1				X	P/S	P/S													
20-2					X				M	65			65							
	21-2■				X															
20-11■					3				I	11						11				
	21-11★	21-11★	G11		X															

MIL-DTL-38999, Series I LJT, II JT, III TV

Insert Availability and Identification Chart

Series	Series	Series	Military	JT/LJT		Hermetics					Contact Size									
JT II	LJT I	TV III	TV III	Solder	Crimp	H	Y	TV*	Service Rating	Total Contacts	22D	22M	22	20	16	12	12 (Coax)	10 (Power)	8 (Coax)	8†† (Twinax)
20-16				X	X	P/S	P/S		II	16					16					
	21-16★	21-16★	G16	X	X	P	P	P												
	21-25■			X					I	25				25						
	21-27■			X					I	27				27						
		21-29 ■			X				I	27				19	4	4				
20-35					X	P	P		M	79	79									
	21-35	21-35	G35		X	P/S	P/S	P												
20-39				X	X	P	P		I	39				37	2					
	21-39	21-39	G39	X	X	P	P	P												
20-41				X	X	P	P		I	41				41						
	21-41	21-41	G41	X	X	P/S	P/S	P												
	21-75★	21-75★✧	G75		2 X				N M	4									4	(4)
	21-79■	21-79 ■			2 X				II	19	17								2	(5)
22-1					X	P/S	P/S		M	100		100								
	23-1				X	P	P													
22-2				X	X	P	P		M	85			85							
	23-2			X	X	P	P													
	23-6★■	23-6★■			P				M	6										6
22-14■					2 ✦				I	14						14				
	23-14■	23-14 ■			2 ✦															
22-21				X	X	P	P		II	21					21					
	23-21★	23-21★	H21	X	X	P	P	P												
22-32				X	X	P	P		I	32				32						
	23-32■			X	P															
	23-34■			X					I	34				34						
22-35					X	P/S	P/S		M	100	100									
	23-35	23-35	H35		X	P	P	P												
22-53■					P				I	53				53						
	23-53	23-53	H53	X	X	P/S	P/S	P												
		23-54 ■			X				M	53	40				9	4				
22-55				X	X	P	P		I	55				55						
	23-55	23-55	H55		X			P												
	23-97■			X					II	16					16					
	23-99■			X					II	11					11					
24-1					X	P	P		M	128		128								
	25-1				X	P	P													
24-2					X				M	100			100							
	25-2				X															
24-4					X	P	P		I	56				48	8					
	25-4	25-4	J4		X			P												
	25-7■	25-7	J7		X				M Twinax	99	97								2	
		25-8★	J8		✦				Twinax	8										8
		25-11***	J11		2 ✦				N	11				2				9		
		25-17 ■			✦				M	42	36									6
24-19■					X	P	P		I	19						19				
	25-19★	25-19★	J19		X			P												
	25-20■	25-20***	J20		2 ✦				N	30				10	13		4			3
24-24					X	P	P		I	24					12	12				
	25-24★	25-24★	J24		X	P	P													
		25-26 ■			✦				I	25				16		5			4	
24-29					X				I	29					29					
	25-29★	25-29★	J29	X	X															

X Completely tooled.
• Majority of tooling is completed (contact Amphenol Aerospace for availability).
✦ Not tooled for 02-R.
P Available with Pin contacts only
S Available with Socket contacts only
P/S Available with Pin contacts or Socket contacts
★ Ground plane proprietary option available. Arrg. 9-5 is exclusively ground plane type.
■ Not Mil-Qualified.
✧ 21-75 is Mil-Qualified with twinax contacts only.
* Hermetic inserts - solder termination standard. (Contact Amphenol Aerospace for optional PCB or eyelet termination).

** Two size 16 contacts dedicated to fiber optics. See the Fiber Optic Section for more information.
*** For use in MIL-STD-1760 applications (see pages 40 & 41).
† For RG 180/U and RG 195/U cables only.
†† Size 8 Coax and Twinax are interchangeable.
(2) Not Tooled for RP or 02RE
(3) Pin inserts only, not tooled for RP or 02RE (Consult Sidney, NY for avail.)
(4) MS connector 21-75 is supplied with size 8 twinax. Commercial connector 21-75 is supplied with size 8 coax.
(5) MS Connector 21-79 has provision for two size 8 coax contacts. Coax contacts are not supplied unless specified by customer.

Amphenol Aerospace

Series	Series	Series	Military	JT/LJT		Hermetics					Contact Size										
JT II	LJT I	TV III	TV III	Solder	Crimp	H	Y	TV*	Service Rating	Total Contacts	22D	22M	22	20	16	12	12 (Coax)	10 (Power)	8 (Coax)	8†† (Twinax)	8 Quadrax
24-35					X	P	P		New	128	128										
	25-35	25-35	J35		X	P	P	P	M												
24-37					X				I	37					37						
	25-37★	25-37★	J37		X																
24-43■					3				I	43				23	20						
	25-43	25-43	J43	X	2 ✦																
	25-46	25-46	J46		2 ✦				I	46				40	4				2		
24-61				X	X	P	P		I	61				61							
	25-61	25-61	J61	X	X	P	P	P													
		25-62■			X ✦				I	12					8						4
		25-90■			✦				I	46				40	4					2	
		25-F4 ■			X				M/I	66	49				13	4					

X Completely tooled.
✦ Not tooled for 02-R.
P Pin inserts only (contact Amphenol Aerospace for socket availability).
★ Ground plane proprietary option available. Arrg. 9-5 is exclusively ground plane type.
■ Not Mil-Qualified.

TV Series III

Select Shell Size - Special Insert Arrangement

(Not Mil-Spec Qualified)

Shell Size-Insert Arrg.	Crimp	Hermetics*	Service Rating	Total Contacts	Comments	Contact Size 22D	20	16	12	8†† (Twinax)
9-2	X		I	2	Formerly Pyle		2			
15-4	X		II	4	Formerly Pyle			4		
15-25	X		M	25	Formerly Pyle	22		3		
17-20	X		M	20	Formerly Pyle		16	4		
21-12	X		I	12	Formerly Pyle		3		9	
21-21	X		M/Inst.	41	Improved sealing	32			9	
21-99	X		M	16	Formerly Pyle	5			11	
25-92	X		M	101	Formerly Pyle	92		9		
25-97	X		M	42	Formerly Pyle	26		3	13	

Select Non-Standard Shell Size

- Special Insert Arrangement

Shell Size-Insert Arrg.	Crimp	Hermetics*	Service Rating	Total Contacts	Contact Size 22D	20	8	4	0
25-16	X		M	8		6		2	
25L-3	X		II	3			1	2	
25L-7	X		II	7			7		
33-3	X		II	3				1	2
33-5	X		II	5				5	
33-6	X		II	6			2	4	
37-5	X		II	4					4

(Insert arrangements requiring non-standard shells or larger contacts)

X Completely tooled.
• Majority of tooling is completed (contact Amphenol Aerospace for availability).
✦ Not tooled for 02-R.
P Pin inserts only (contact Amphenol Aerospace for socket availability).
★ Ground plane proprietary option available. Arrangement 9-5 is exclusively ground plane type.
■ Not Mil-Qualified.
* Hermetic inserts - solder termination standard. (Contact Amphenol Aerospace for optional PCB or eyelet termination).
** Two size 16 contacts dedicated to fiber optics. See the Fiber Optic section for more information.
*** For use in MIL-STD-1760 applications (pgs. 40 & 41).
† For RG 180/U and RG 195/U cables only.
†† Size 8 Coax and Twinax are interchangeable.
Note: 25L-3 and 25L-7 require longer shells.

MIL-DTL-38999, Series I LJT, II JT, III TV

Insert Arrangements

Front face of pin inserts illustrated

Shell Size & Insert Arrg. for:											
Series II JT	8-2	8-3		8-6			8-35	8-44		8-97	8-98
Series I LJT		9-3		9-6	9-7	9-22	9-35	9-44			9-98
Series III TV			9-5				9-35		9-94		9-98
Service Rating	M	M	Grounded	M	M	I	M	M	M	M	I
Number of Contacts	2	3	1	6	7	2	6	4	2	2 2	3
Contact Size	20	20	8 Twinax	22M	22M	20	22D	22	20	22M 20	20

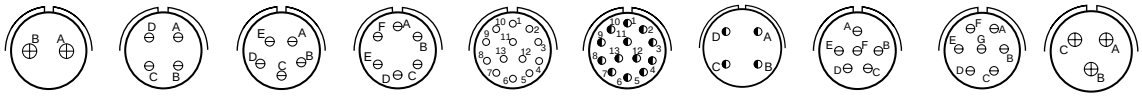

Shell Size & Insert Arrg. for:										
Series II JT		10-4	10-5		10-13	10-35		10-98	10-99	12-3
Series I LJT	11-2	11-4	11-5	11-6	11-13	11-35		11-98	11-99	13-3
Series III TV	11-2	11-4	11-5			11-35	11-54	11-98	11-99	
Service Rating	I	I	I	I	M	M	II	I	I	II
Number of Contacts	2	4	5	6	13	13	4	6	7	3
Contact Size	16	20	20	20	22M	22D	22D	20	20	16

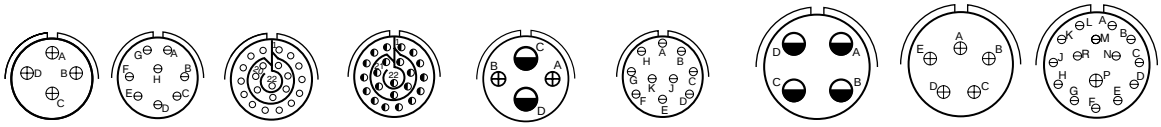

Shell Size & Insert Arrg. for:										
Series II JT	12-4	12-8	12-22	12-35		12-98	14-4	14-5	14-15	
Series I LJT	13-4	13-8	13-22	13-35		13-98	15-4	15-5	15-15	
Series III TV	13-4	13-8		13-35	13-63	13-98	15-4	15-5	15-15	
Service Rating	I	I	M	M	I	I	I	II	I	
Number of Contacts	4	8	22	22	2 2	10	4	5	14	1
Contact Size	16	20	22M	22D	16 12	20	12	16	20	16

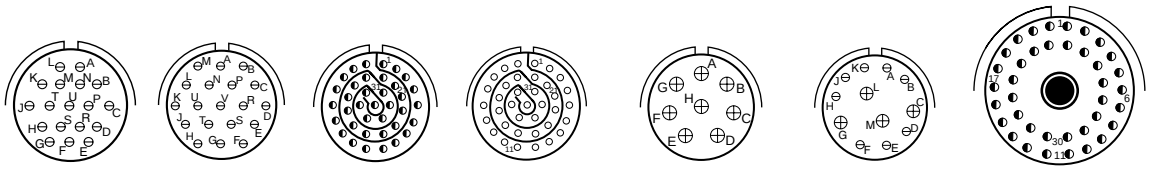

Shell Size & Insert Arrg. for:								
Series II JT	14-18	14-19	14-35	14-37	14-68	14-97		
Series I LJT	15-18	15-19	15-35	15-37	15-68	15-97	17-2	
Series III TV	15-18	15-19	15-35			15-97	17-2	
Service Rating	I	I	M	M	I	I	M	
Number of Contacts	18	19	37	37	8	8 4	38	1
Contact Size	20	20	22D	22M	16	20 16	22D	8 Twinax

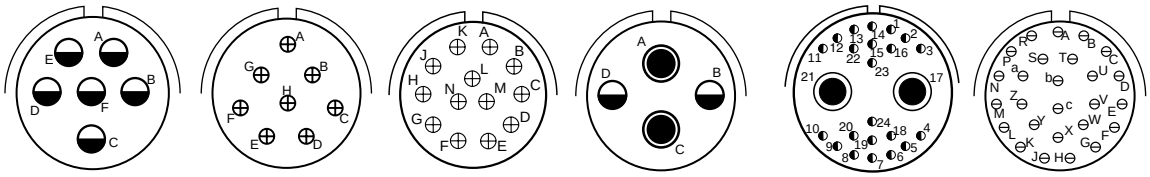

Shell Size & Insert Arrg. for:							
Series II JT	16-6	16-8	16-13				16-26
Series I LJT	17-6	17-8	17-13	17-22	17-25		17-26
Series III TV	17-6	17-8		17-22			17-26
Service Rating	I	II	I	Coax	M		I
Number of Contacts	6	8	13	2 2	22	2	26
Contact Size	12	16	16	12 Coax 8 Coax	22D	8 Coax	20

CONTACT LEGEND 8 10 12 16 20 22 22M 22D

Amphenol Aerospace

Front face of pin inserts illustrated

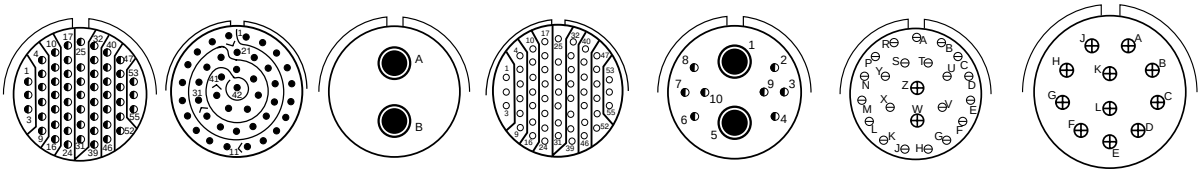

Shell Size & Insert Arrg. for:									
Series II JT	16-35	16-42		16-55			16-99		18-11
Series I LJT	17-35	17-42		17-55			17-99		19-11
Series III TV	17-35		17-52			17-60	17-99		19-11
Service Rating	M	M	M	M		I/Coax	I		II
Number of Contacts	55	42	2	55	8	2	21	2	11
Contact Size	22D	22	8 Twinax	22M	22D	8 Coax	20	16	16

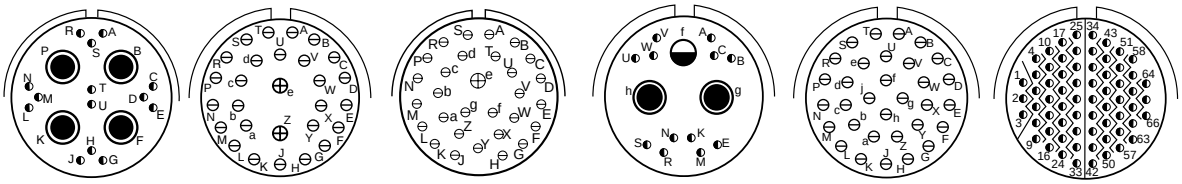

Shell Size & Insert Arrg. for:											
Series II JT			18-28		18-30					18-32	18-35
Series I LJT		19-18	19-28		19-30					19-32	19-35
Series III TV		19-18	19-28					19-31		19-32	19-35
Service Rating		M	M		I			M		I	M
Number of Contacts	14	4	26	2	29	1	2	1	12	32	66
Contact Size	22D	8 Twinax	20	18	20	16	8 Coax	12	22D	20	22D

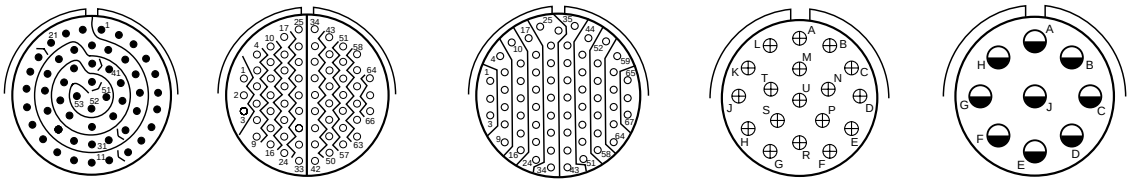

Shell Size & Insert Arrg. for:					
Series II JT	18-53	18-66		18-68	18-96
Series I LJT	19-53	19-66	19-67	19-68	
Series III TV					
Service Rating	M	M	M	I	I
Number of Contacts	53	66	67	18	9
Contact Size	22	22M	22M	16	12

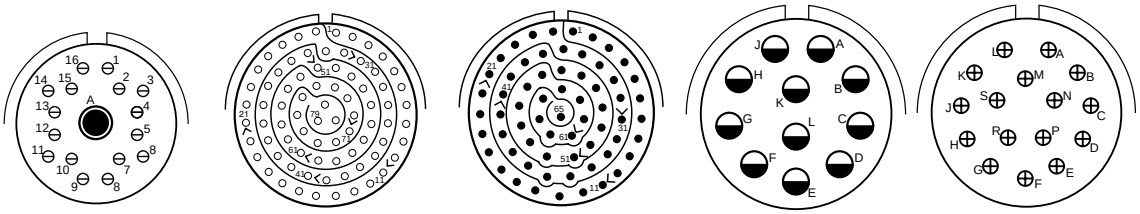

Shell Size & Insert Arrg. for:						
Series II JT			20-1	20-2	20-11	20-16
Series I LJT			21-1	21-2	21-11	21-16
Series III TV		19-AD			21-11	21-16
Service Rating		Inst.	M	M	I	II
Number of Contacts	16	1	79	65	11	16
Contact Size	20	8 Twinax	22M	22	12	16

CONTACT LEGEND 8 10 12 16 20 22D

Front face of pin inserts illustrated

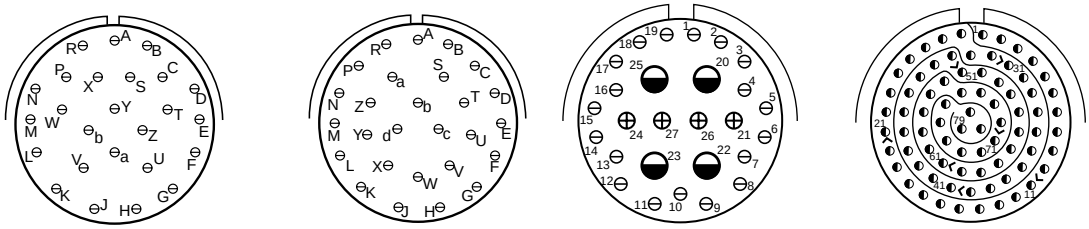

Shell Size & Insert Arrg. for:						
Series II JT						20-35
Series I LJT	21-25	21-27				21-35
Series III TV			21-29			21-35
Service Rating	I	I	I			M
Number of Contacts	25	27	19	4	4	79
Contact Size	20	20	20	16	12	22D

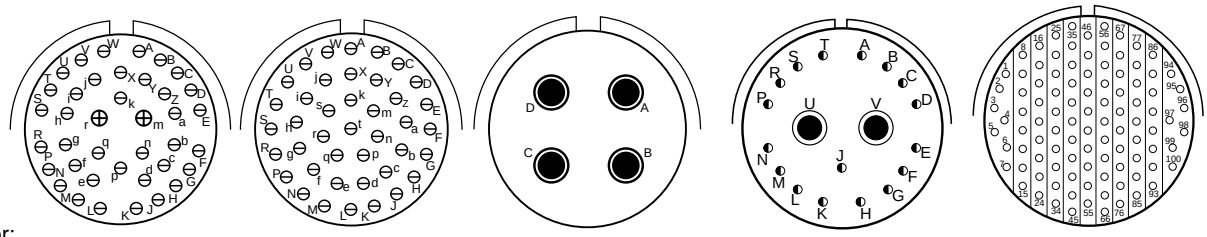

Shell Size & Insert Arrg. for:					
Series II JT	20-39	20-41			22-1
Series I LJT	21-39	21-41	21-75	21-79	23-1
Series III TV	21-39	21-41	21-75	21-79	
Service Rating	I	I	N	II	M
Number of Contacts	37 2	41	4	17 (See Note)	100
Contact Size	20 16	20	(See Note)	22D	22M

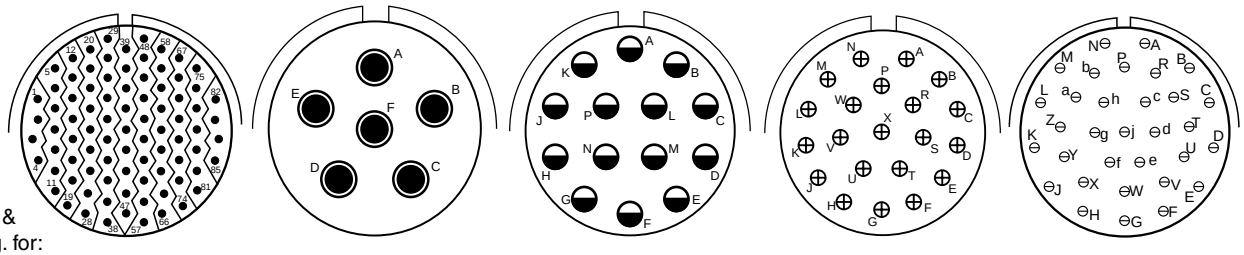

Shell Size & Insert Arrg. for:					
Series II JT	22-2		22-14	22-21	22-32
Series I LJT	23-2	23-6	23-14	23-21	23-32
Series III TV		23-6	23-14	23-21	
Service Rating	M	M	I	II	I
Number of Contacts	85	6	14	21	32
Contact Size	22	8 Twinax	12	16	20

Note: MS connector 21-75 is supplied with four size 8 twinax contacts.
Commercial connector 21-75 is supplied with four size 8 coax contacts.
MS connector 21-79 has provision for two size 8 coax contacts.
Coax contacts are not supplied unless specified by customers.

CONTACT LEGEND	8	10	12	16	20	22D

Amphenol Aerospace

Front face of pin inserts illustrated

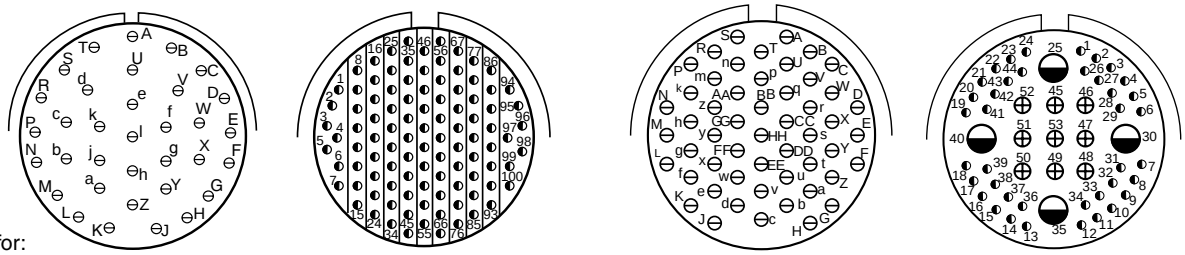

Shell Size & Insert Arrg. for:

Series II JT		22-35	22-53			
Series I LJT	23-34	23-35	23-53			
Series III TV		23-35	23-53	23-54		
Service Rating	I	M	I	M		
Number of Contacts	34	100	53	40	9	4
Contact Size	20	22D	20	22D	16	12

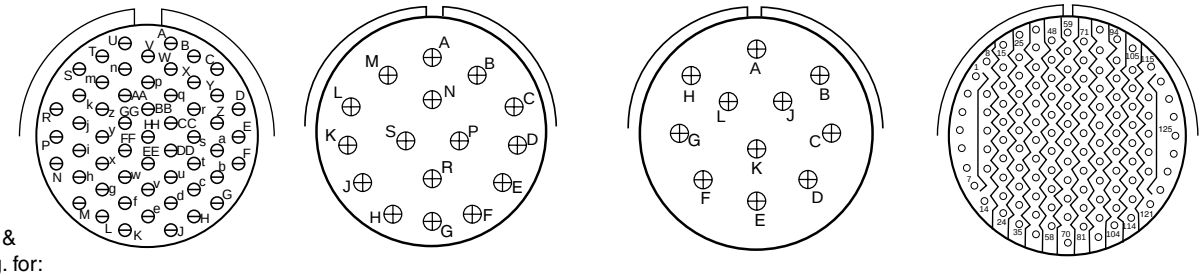

Shell Size & Insert Arrg. for:

Series II JT	22-55			24-1
Series I LJT	23-55	23-97	23-99	25-1
Series III TV	23-55			
Service Rating	I	II	II	M
Number of Contacts	55	16	11	128
Contact Size	20	16	16	22M

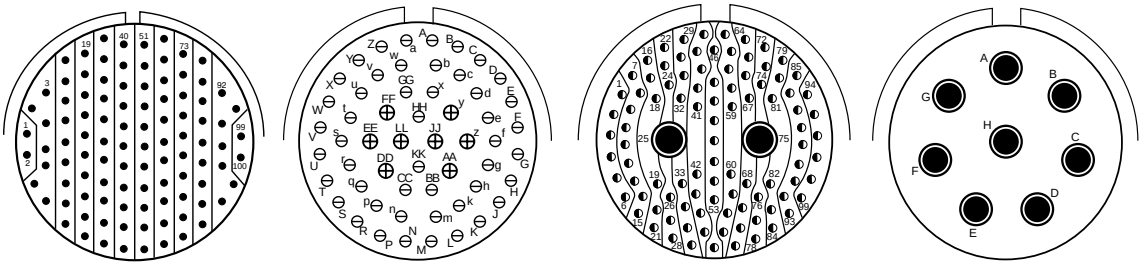

Shell Size & Insert Arrg. for:

Series II JT	24-2	24-4			
Series I LJT	25-2	25-4		25-7	
Series III TV		25-4		25-7	25-8
Service Rating	M	I		M	Twinax
Number of Contacts	100	48	8	97 2	8
Contact Size	22	20	16	22D 8 Twinax	8 Twinax

*** For use in MIL-STD-1760 applications (see pages 40 and 41).

CONTACT LEGEND 8 10 12 16 20 22D

Front face of pin inserts illustrated

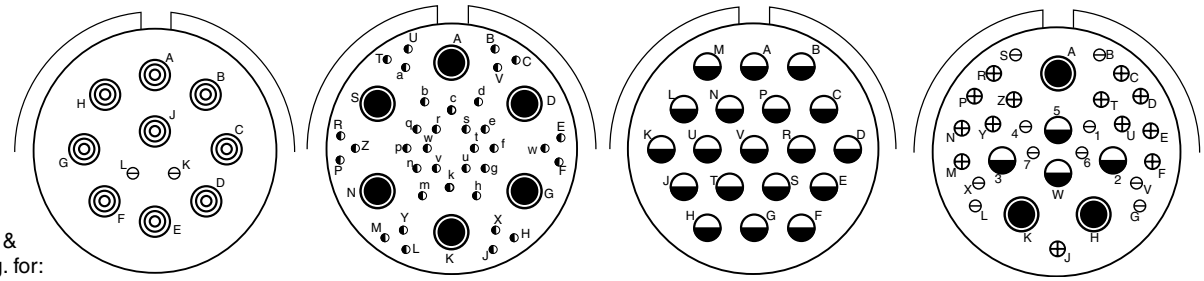

Shell Size & Insert Arrg. for:									
Series II JT					24-19				
Series I LJT	25-11				25-19			25-20	
Series III TV	25-11***		25-17		25-19			25-20***	
Service Rating	N		M		I			N	
Number of Contacts	2	9	36	6	19	10	13	3	4
Contact Size	20	10	22D	8 Twinax	12	20	16	8 Twinax	12 Coax

(With Matched Impedance)

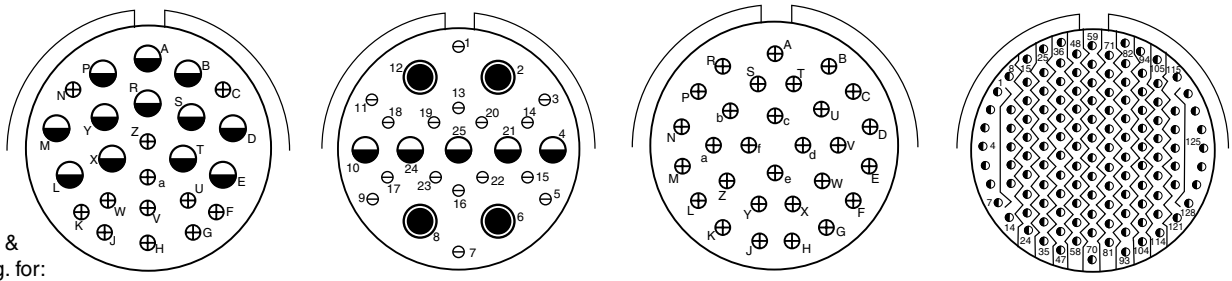

Shell Size & Insert Arrg. for:							
Series II JT	24-24				24-29	24-35
Series I LJT	25-24				25-29	25-35
Series III TV	25-24		25-26		25-29	25-35
Service Rating	I		I		I	M
Number of Contacts	12	12	16	5	4	29	128
Contact Size	16	12	20	12	8 Coax	16	22D

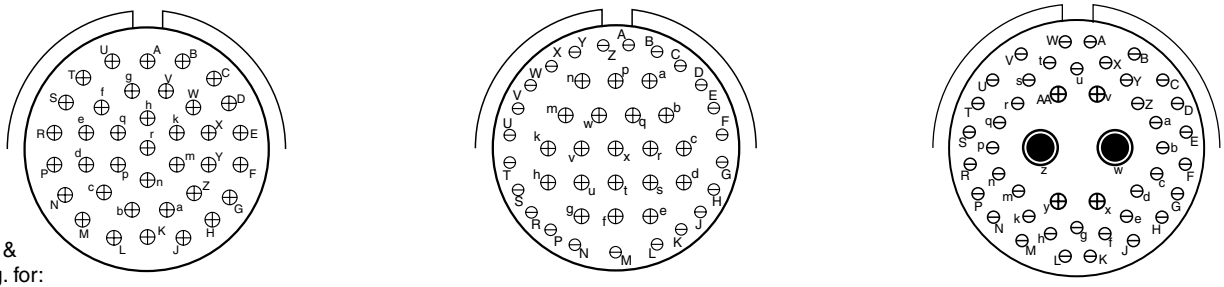

Shell Size & Insert Arrg. for:								
Series II JT	24-37		25-43					
Series I LJT	25-37		25-43			25-46		
Series III TV	25-37		25-43			25-46		
Service Rating	I		I			I		
Number of Contacts	37		23	20		40	4	2
Contact Size	16		20	16		20	16	8 Coax

† Coax contacts for RG180/U or RG195/U cable.

CONTACT LEGEND	8	10	12	16	20	22D

Amphenol Aerospace

CONTACT RATING

Contact Size	Test Current (Amps)		Maximum Millivolt Drop Crimp*	Maximum Millivolt Drop	
	Crimp	Hermetic		Solder*	Hermetic*
22M	3	2	45	20	60
22D	5	3	73		85
22	5	3	73	20	85
20	7.5	5	55	20	60
16	13	10	49	20	85
12	23	17	42	20	85
10 (Power)	33	NA	33	NA	NA
8 (Power)	46	NA	26	NA	NA
4	80	NA	23	NA	NA
0	150	NA	21	NA	NA

*When tested using silver plated wire.

Contact Size	Crimp Well Data		Solder Well Data	
	Well Diameter	Normal Well Depth	Well Diameter	Nominal Well Depth
22M	.028 ± .001	.141	.029 +.004 – .000	
22D	.0345 ± .0010	.141	.036 +.004 -.000	.094
22	.0365 ± .0010	.141	.036 +.004 -.000	.094
20	.047 ± .001	.209	.044 +.004 -.004	.125
16	.067 ± .001	.209	.078 +.000 -.004	.141
12	.100 ± .002	.209	.116 +.004 -.002	.141
10 (Power)	.137 ± .002	.355	NA	NA
8	.181 ± .002	.490	NA	NA
4	.281 ± .002	.490	NA	NA
0	.453 ± .002	.585	NA	NA

SERVICE RATING**

Service Rating	Suggested Oper. Voltage (Sea Level)		Test Voltage (Sea Level)	Test Voltage 50,000 Ft.	Test Voltage 70,000 Ft	Test Voltage 110,000 Ft.
	AC (RMS)	DC				
M	400	500	1300 VRMS	550 VRMS	350 VRMS	200 VRMS
N	300	450	1000 VRMS	400 VRMS	260 VRMS	200 VRMS
I	600	850	1800 VRMS	600 VRMS	400 VRMS	200 VRMS
II	900	1250	2300 VRMS	800 VRMS	500 VRMS	200 VRMS

**Please note that the establishment of electrical safety factors is left entirely in the designer's hands, since he is in the best position to know what peak voltage, switching surges, transients, etc. can be expected in a particular circuit.

MIL-DTL-38999 Series III STANDARD 500 CYCLE CONTACTS FOR TV AND CTV, P & S

Contact Size	TV/CTV Pins		TV/CTV Sockets	
	Military No.	Supersedes	Military No.	Supersedes
8 (Coax)*	M39029/60-367	MS27536	M39029/59-366	MS27535
8 (Power)	Contact Factory	"	"	"
8 (Twinax)	M39029/90-529**	N/A	M39029/91-530	N/A
10 (Power)	M39029/58-528	N/A	M39029/56-527	N/A
12	M39029/58-365	MS27493-12	M39029/56-353	MS27490-12
16	M39029/58-364	MS27493-16	M39029/56-352	MS27490-16
20	M39029/58-363	MS27493-20	M39029/56-351	MS27490-20
22D	M39029/58-360	MS27493-22D	M39029/56-348	MS27490-22D
4	N/A	N/A	N/A	N/A
0	N/A	N/A	N/A	N/A

** For use with M17/M176-00002 cable.
† Optional design - see slash sheet MS39029.
For other contact options available for use in Tri-Start connectors, (wire wrap, thermocouple, fiber optic) consult Amphenol. Wire wrap data given on next page.

Above part numbers include standard 500 cycle finish designation - gold plating over suitable underplate in accordance with SAE AS39029. For other finish variations, consult Sidney, NY.
*For use with RG180B/U and RG195A/U cable. For other size 8 coax or optional sizes 12 and 16 coax contacts available for use in Tri-Start connectors, see High Speed Contact section of this catalog or consult Amphenol, Sidney, NY.

MIL-DTL-38999 Series III 1500 CYCLE CONTACTS FOR CTV, CLASSES H & J

Contact Size	CTV Pins			CTV Sockets		
	Commercial No.	Military No.	Supersedes	Commercial No.	Military No.	Supersedes
12	10-597072-2X	M39029/107-623	–	10-597073-2X	M39029/106-617	–
16	10-597068-2X	M39029/107-622	–	10-597069-2X	M39029/106-616	–
20	10-597064-2X	M39029/107-621	–	10-597065-2X	M39029/106-615	–
22D	10-597058-3X	M39029/107-620	–	10-597061-2X	M39029/106-614	–

MIL-DTL-38999 Series II JT/ Series I LJT CRIMP CONTACTS

Contact Size	JT/LJT Pins MS No.	JT Socket MS No.	LJT Sockets MS No.
8 (Coax)*	M39029/60-367	NA	M39029/59-366
8 (Twinax)	M39029/90-529**	NA	M39029/91-530
10 (Power)	M39029/58-528	NA	M39029/56-527
12	M39029/58-365	M39029/57-359	M39029/56-353
16	M39029/58-364	M39029/57-358	M39029/56-352
20	M39029/58-363	M39029/57-357	M39029/56-351
22	M39029/58-362	M39029/57-356	M39029/56-350
22M	M39029/58-361	M39029/57-355	M39029/56-349
22D	M39029/58-360	M39029/57-354	M39029/56-348

FINISH DATA MIL-DTL-38999, Tri-Start Series III TV

Aluminum Shell Components Non-Hermetic		
Finish	Service Class	
	Military	Commercial
Anodic Coating (Non-Conductive)	C	RX**
Electroless Nickel	F (Metal)	RF
	M (Composite)	
Olive Drab Cadmium Plate Nickel Base	W (Metal)	RW
	J (Composite)	
Stainless Steel with Nickel Plate	S	RS
Stainless Steel	K	RK
Durmalon plated	T	DT
Zinc-Nickel Plated	Z	ZN

Hermetic Shell Components		
Material/Finish	Service Class	
	Military	Commercial
Stainless Steel	Y	Y
Stainless Steel with Nickel Plate	N	YN

**Add Suffix (005) to part number.

FINISH DATA MIL-DTL-38999, Series I LJT, II JT

Aluminum Shell Components Non-Hermetic					
Finish	Suffix			Indicated Finish Standard for JT Types Listed Below	Indicated Finish Standard for LJT Types Listed Below
	Military	Commercial	Finish Plus "SR" Suffix		
Cadmium Plated Nickel Base	MS (A)	–	(SR)	JT/JTG/JTL/JTP	LJT/LJTP
Anodic Coating (Alumilite)	MS (C)	(005)	(300)	JTS/JTPS/JTLS	LJTPS/LJTS
Chromate Treated (Iridite 14-2)		(011)	(344)	JTN/JTPN/JTLN	LJTN/LJTPN
Olive Drab Cadmium Plate Nickel Base	MS (B)	(014)	(386)		
Electroless Nickel	MS (F)	(023)	(424)		
Nickel-PTFE		(038)			

Hermetic Connectors				
Finish	Suffix		Indicated Finish Standard for JT Types Listed Below	Indicated Finish Standard for LJT Types Listed Below
	Military	Commercial		
Carbon Steel Shell Tin Plated Shell and Contacts			JT( )H / JT( )Y JTL( )H / JTL( )Y	LJT( )Y LJT( )H
Carbon Steel Shell Tin Plated Shell and Gold Plated Contacts	MS (D)			
Stainless Steel Shell Gold Plated Contacts	MS (E)	(162)	JTS( )Y JTLS( )Y	LJTS( )Y

Features & Benefits

Amphenol® LJT and JT Series subminiature cylindrical connectors are qualified to MIL-DTL-38999*, Series I and II respectively. These connectors were developed to meet the needs of the aerospace industry, and provided the impetus for development of the MIL-C-38999 specifications, which has been superseded by MIL-DTL-38999. Meeting or exceeding MIL-DTL-38999 requirements, Amphenol® JT/LJT connectors feature:

- **Lightweight, Space Saving Design**
- **Contact Protection -** 100% scoop-proof LJT design prevents bent pins and short circuits during mating
- **Quick Positive Coupling** - 3 point bayonet lock system
- **Mismating Eliminated** - with 5 key/keyway design
- **Error Proof Alternate Positioning** - insured by different key/keyway locations
- **EMI Shielding** - grounding fingers standard in LJT Series; optional in JT Series
- **Nine Shell Sizes and a Variety of Shell Styles**
- **Contact Options** - size 8, 10, 12, 16, 20, 22M and 22D Crimp, Solder, PCB, Wire wrap, Coax, Twinax, Triax, Thermocouple, Fiber Optic and Filter
- **Fixed Solder Contacts** - Amphenol MIL-DTL-38999 Series I LJT and II JT, are available in solder versions as both Commercial and Military qualified to MIL-DTL-27599
- **Hermetic** - air leakage limited to 1 X 10^{-7} cm^3 per second optional
- **"Breakaway" Lanyard Release Style** - available in LJT plugs. Provides quick disconnect of the connector plug and receptacle with axial pull on the lanyard. See pages 78-80.
- **Inventory Support Commonality** - uses standard MIL-DTL-38999 contacts, insert arrangements and application tools.
- **RoHS Compliant Product Available -** Consult Amphenol Aerospace Operations.

Where proof of high reliability and lot control is required, MS approved equivalents to most proprietary JT and LJT connectors are available.

* MIL-DTL-38999 Series I supersedes MIL-C-38999 Series I.
MIL-DTL-38999 Series II supersedes MIL-C-38999 Series II.

Components

Shell components are impact extruded or machined bar stock aluminum. Standard plating on shell components is cadmium over nickel. Many finishes are optional (see "Specifications" page 16). Hermetic seal receptacles are available in carbon steel or stainless steel shells. Dependable 5 key/keyway polarization with bayonet lock coupling is incorporated to aid and assure positive mating.

Insert material is a rigid dielectric with excellent electrical characteristics, providing durable protection for molded-in solder type contacts. Contrasting letter or number designations are used on insert faces.

A fluorinated silicone interfacial seal wafer is featured on the mating face of "crimp type pin" inserts. This assures complete electrical isolation of pins when connector halves are mated. In addition, a main joint gasket is installed in the receptacle for moisture sealing between connector halves. Both features are also available for hermetic receptacles.

Contacts

Maximum design flexibility is built into the JT/LJT Series, with a minimum of 2 to a maximum of 128 circuits per connector in a wide variety of contact arrangements. Contacts are available in sizes 8, 10, 12, 16, 20, 22, 22D and 22M with standard 50 micro inch minimum gold plating (100 micro inches optional). All socket contacts are probe proof. Crimp type rear removable contacts are featured in JT-R and LJT-R connectors. Solder termination contacts are also available, as well as PCB, wire wrap, thermocouple, fiber optic, coaxial, triaxial and twinax contact options.

Optional Features

High temperature capability of 392°F is available only in JTS or LJTS crimp type connectors. High temperature versions feature gold plated contacts, high temperature shell plating, stainless steel coupling nut spring, and epoxy inserts/fluorinated silicone grommet combination. Standard temperature capability for both solder and crimp is 302°F.

The JTN or LJTN type connectors are available for N_2O_4resistance provided they are mated, and un-grommeted rear faces are suitably protected.
For complete listing and definition of connector types, shell styles and service classes, see How to Order, page 46. For information on Fail-Safe Lanyard Release style plugs, see pages 78–80.

How to Order (Commercial)

Easy Steps to build a commercial part number... Series I and II

Commercial

1. Connector Type Series I	Type II	2. Shell Style	3. Service Class	4. Shell Size-Insert Arrangement	5. Contact Type	6. Alternate Position	7. Strain Relief/Finish Variation Suffix	
LJT	JT	00	RT	9-35	P	B	SR	(014)

Step 1. Select a Connector Type

1. Connector Type	2. Shell Style	3. Service Class	4. Shell Size-Insert Arrg.	5. Contact Type	6. Alternate Position	7. Special Variations
JT						

Series I	Series II	Designates
	JT	Standard Junior Tri-Lock
LJT		Long Junior Tri-Lock
LJTS	JTS	High temperature connector
LJTN	JTN	Chemical and fuel resistant
	JTL	Miniature mounting dimensions
	JTLN	Miniature mounting dimensions–Chemical resistant
	JTLS	Miniature mounting dimensions– High temperature
LJTPQ	JTPQ	Back panel mounted wall mounting receptacle
LJTP	JTP	Back panel mounted box mounting receptacle
LJTPN	JTPN	Back panel mounted–Chemical resistant
LJTPS	JTPS	Back panel mounted–High temperature
	JTG	Plug with grounding fingers*
	JTNG	Plug with grounding fingers* –Chemical resistant

*Grounding fingers standard on all LJT plugs

Step 2. Select a Shell Style... Series I & II

1. Connector Type	2. Shell Style	3. Service Class	4. Shell Size-Insert Arrg.	5. Contact Type	6. Alternate Position	7. Special Variations
	00					

Lanyard Release Connector (See pages 78-80 for ordering)

	Designates
00	Wall mount receptacle
01	Line mount receptacle
02	Box mount receptacle
06	Straight plug
07	Jam nut receptacle
08	90 degree plug
I	Solder mount receptacle- hermetic
88	Fail safe lanyard release plug with corrosion resistant olive drab cadmium plate over nickel shells
91	Fail safe lanyard release plug with electroless nickel plated aluminum shells.

Series I LJT

Wall Mounting Receptacle

Line Receptacle

Jam Nut Receptacle

Straight Plug

Solder Mounting Receptacle

Lanyard Release Plug

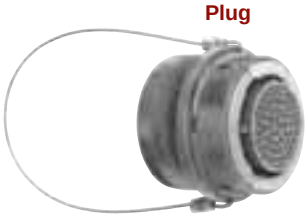

Series II JT

Wall Mounting Receptacle

Box Mounting Receptacle

Straight Plug

Jam Nut Receptacle

90° Plug

Solder Mounting Receptacle

Amphenol Aerospace

How to Order (Commercial)

Step 3. Select a Service Class

1.	2.	3.	4.	5.	6.	7.
Connector Type	Shell Style	Service Class	Shell Size-Insert Arrg.	Contact Type	Alternate Position	Special Variations
		RX				

Commercial	Solder Contacts/Connectors
P	Potting applications: These connectors are supplied with a potting boot. All shells are designed with integral features to retain potting boots.
A	General Applications
A (SR)	Threaded rear design with strain relief†
C	Pressurized applications
C (SR)	Threaded rear design with strain relief.†
E	Box mount and thru-bulkhead only with no backend threads.
H	Hermetic applications- Fused compression glass sealed inserts. Leadage rate less than .01 micron cu. ft./hr. (1 x 10-7 cc/sec.) at 15 psi differential.
Y	Same as "H" with interfacial seal.
T	MS27599A applications-general duty, pressurized (receptacle only)
Commercial	**Crimp Contacts/Connectors**
RP	Potting crimp applications. Supplied with spacer grommet and potting boot.††
RE	Environmental crimp applications. Supplied with a grommet and compression nut.† Can be supplied with strain relief integral with compression nut "RE(SR)". (JT Series only)
RGF	Electroless nickel plated ground plane aluminum, 200°C
RGW	Olive drab cadmium plated ground plane aluminum, 175°C
RT	Environmental applications. Supplied without rear accessories. Design provides serrations on rear threads of shells.

† Not applicable to box mounting style or LJT Series I.
†† Not applicable to box mounting style.

Step 4. Select a Shell Size & Insert Arrangement see page 4-7

Shell Size & Insert Arrangements are on pages 4-7.
First number represents Shell Size,
second number is the Insert Arrangement.

1.	2.	3.	4.	5.	6.	7.
Connector Type	Shell Style	Service Class	Shell Size-Insert Arrg.	Contact Type	Alternate Position	Special Variations
			22-2			

Step 5. Select a Contact Type

1.	2.	3.	4.	5.	6.	7.
Connector Type	Shell Style	Service Class	Shell Size-Insert Arrg.	Contact Type	Alternate Position	Special Variations
				P		

	Designates
P	Pin Contacts
S	Socket Contacts

How to Order (Commercial)

1.	2.	3.	4.	5.	6.	7.
Connector Type	Shell Style	Service Class	Shell Size Insert Arrg.	Contact Type	Alternate Position	Special Variations
					A	

Step 6. Select an Alternate Keying Position

"A" designates Alternate keying connector assembly. Other basic alternate keys are "B", "C" and "D". No letter required for normal rotation (no rotation) position.

A plug with a given rotation letter will mate with a receptacle with the same rotation letter. The AB angle for a given connector is the same whether it contains pins or sockets. Only the master key/keyway rotates in the shell, and the minor keys are fixed.

AB angles shown are viewed from the front face of the connector, a receptacle is shown below. The angles for the plug are exactly the same except the direction of rotation is opposite of that shown for the receptacle.

The "N" designation is not referenced in part number, it is omitted.

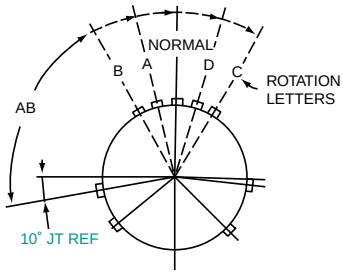

RELATIVE POSSIBLE POSITION OF ROTATED MASTER KEYWAY (front face of receptacle shown)

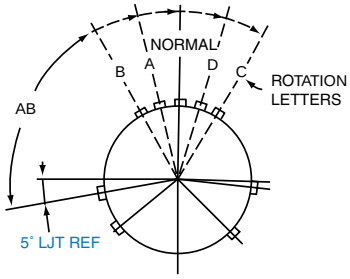

RELATIVE POSSIBLE POSITION OF ROTATED MASTER KEYWAY (front face of receptacle shown)

JT Key/Keyway Rotation

AB ANGLE OF ROTATION (Degrees)					
Shell Size	Normal	A	B	C	D
8	100°	82°	-	-	118°
10	100°	86°	72°	128°	114°
12	100°	80°	68°	132°	120°
14	100°	79°	66°	134°	121°
16	100°	82°	70°	130°	118°
18	100°	82°	70°	130°	118°
20	100°	82°	70°	130°	118°
22	100°	85°	74°	126°	115°
24	100°	85°	74°	126°	115°

LJT Key/Keyway Rotation

AB ANGLE OF ROTATION (Degrees)					
Shell Size	Normal	A	B	C	D
9	95°	77°	-	-	113°
11	95°	81°	67°	123°	109°
13	95°	75°	63°	127°	115°
15	95°	74°	61°	129°	116°
17	95°	77°	65°	125°	113°
19	95°	77°	65°	125°	113°
21	95°	77°	65°	125°	113°
23	95°	80°	69°	121°	110°
25	95°	80°	69°	121°	110°

1.	2.	3.	4.	5.	6.	7.
Connector Type	Shell Style	Service Class	Shell Size-Insert Arrg.	Contact Type	Alternate Position	Special Variations
						( )

Step 7. Select a Strain Relief Option or Finish Variation Suffix

Strain Relief Options: "SR" designates a strain relief clamp. Strain reliefs are available only on Service Class "A", "C" and "RE" (see step 3. Service Class)

Finish Variation Suffix: See finish variations available in table to your right.

Finish	Military Finish Data	Finish Suffix	Finish Plus "SR" Suffix
Cadmium plated nickel base 175° C	A		(SR)
Olive drab cadmium plate nickel base 175° C	B	(014)	(386)
Electroless nickel 200° C	F	(023)	(424)
Electroless nickel, space compatible 200° C		(453)	(467)
Anodic coating (Alumilite) 200° C	C	(005)	(300)
Chromate treated (Iridite 14-2) 125° C		(011)	(344)
Passivated steel 200° C	E	-	-
Nickel-PTFE 175° C		(038)	

Amphenol Aerospace

How to Order (Commercial)

Easy Steps to build a Military part number... Series I and II

Military

1.	2.	3.	4.	5.	6.	7.
MS Number	Service Class	Shell Size	Finish	Insert Arrangement	Contact Style (P or S)	Alternate Keying Position
MS27473	E	14	A	18	P	A

Step 1. Choose your Military Connector Type

1.	2.	3.	4.	5.	6.	7.
MS Number	Service Class	Shell Size	Finish	Insert Arrangement	Contact Style (P or S)	Alternate Position
MS27473						

Series II JT

	Designates
MS27472	Crimp Wall Mount Receptacle
MS27497	Crimp Wall Mount Receptacle Back Panel Mounting
MS27499	Crimp Box Mounting Receptacle
MS27513	Crimp Box Mounting Receptacle with grommet and compression nut
MS27508	Crimp Box Mounting Receptacle (Back Panel Mounting)
MS27473	Crimp Straight Plug
MS27484	Crimp Straight Plug with Grounding Fingers
MS27474	Crimp Jam Nut Receptacle
MS27500	Crimp 90° plug
MS27475	Hermetic Wall Mounting Receptacle
MS27476	Hermetic Box Mounting Receptacle
MS27477	Hermetic Jam Nut Receptacle
MS27478	Hermetic Solder Mounting Receptacle
MS27334	Solder Wall Mount Receptacle
MS27335	Solder Box Mounting Receptacle
MS27336	Solder Straight Plug
MS27337	Solder Jam Mounting Receptacle

Series I LJT

	Designates
MS27466	Crimp Wall Mount Receptacle
MS27656	Crimp Wall Mount Receptacle Back Panel Mounting
MS27496	Crimp Box Mounting Receptacle
MS27505	Crimp Box Mounting Receptacle (Back Panel Mounting)
MS27467	Crimp Straight Plug
MS27468	Crimp Jam Nut Receptacle
MS27469	Hermetic Wall Mounting Receptacle
MS27470	Hermetic Jam Nut Receptacle
MS27471	Hermetic Solder Mounting Receptacle
MS20026	Solder Wall Mounting Receptacle
MS20027	Solder Line Receptacle
MS20028	Solder Straight Plug
MS20029	Solder Jam Nut Receptacle

Step 2. Select a Military Service Class

1.	2.	3.	4.	5.	6.	7.
MS Number	Service Class	Shell Size	Finish	Insert Arrangement	Contact Style (P or S)	Alternate Position
	E					

Military	Service Class
E	Environmental crimp applications. Supplied with a grommet and compression nut.† Can be supplied with strain relief integral with compression nut "RE(SR)". (JT Series only). Box Mount versions using spacer grommets are not environmental.
P	Potting crimp applications. Supplied with spacer grommet and potting boot.††
T	Environmental applications. Supplied without rear accessories. Design provides serrations on rear threads of shells. (MS27599 applications)- General duty-pressurized (receptacles only)
Y	Hermetically interfacial seal

† Not applicable to box mounting style or LJT Series I.
†† Not applicable to box mounting style.

How to Order (Military)

Step 3 & 5. Select a Shell Size and Insert Arrangement from Pages 4-7

1. MS Number	2. Service Class	3. Shell Size	4. Finish	5. Insert Arrangement	6. Contact Style (P or S)	7. Alternate Position
		14		18		

Shell Size & Insert Arrangement are on pages 4-7. First number represents Shell Size, second number is the Insert Arrangement. Place Shell Size in box 3 and Insert Arrangement in box 5.

Step 4. Select a Military Finish

1. MS Number	2. Service Class	3. Shell Size	4. Finish	5. Insert Arrangement	6. Contact Style (P or S)	7. Alternate Position
			A			

Finish	Military Finish Data	Finish Suffix	Finish Plus "SR" Suffix
Cadmium plated nickel base 175° C	A		(SR)
Olive drab cadmium plate nickel base 175° C	B	(014)	(386)
Electroless nickel 200° C	F	(023)	(424)
Electroless nickel, space compatible 200° C		(453)	(467)
Anodic coating (Alumilite) 200° C	C	(005)	(300)
Chromate treated (Iridite 14-2) 125° C		(011)	(344)
Passivated steel 200° C	E	-	-
Nickel-PTFE 175° C		(038)	

Step 6. Select a Military Contact Type

	Designates
P	Pin Contacts
S	Socket Contacts

1. MS Number	2. Service Class	3. Shell Size	4. Finish	5. Insert Arrangement	6. Contact Style (P or S)	7. Alternate Position
					P	

Step 7. Select an Alternate Keying Position

See pg 48 for information, No letter required for normal position

1. MS Number	2. Service Class	3. Shell Size	4. Finish	5. Insert Arrangement	6. Contact Style (P or S)	7. Alternate Position
						A

Amphenol
MIL-DTL-38999, Series I, LJT

TABLE OF CONTENTS

Combined MIL-DTL-38999 Series I, II, III

- Shell Size & Insert Arrangements Availability 4-7
- Insert Arrangement Drawings 8-14
- Specifications - Contact Ratings, Service Ratings, Finish Data 15, 16

MIL-DTL-38999, Series II JT and Series I LJT

- Features and Benefits 45
- How to Order (Commercial). 46-48
- How to Order (Military). 49, 50

LJT Shell Styles:

- Table of Contents 67
- Crimp Wall Mounting Receptacle LJT00R (MS27466) 68
- Crimp Wall Mount Recept. for Back Panel Mounting LJTPQ00R (MS27656). . . 69
- Crimp Line Receptacle LJT01R 70
- Crimp Box Mounting Receptacle LJT02R (MS27496),
  Crimp Box Mounting Receptacle for Back Panel Mounting LJTP02R (MS27505) 71
- Crimp Straight Plug LJT06R (MS27467). 72
- Crimp Jam Nut Receptacle LJT07R (MS27468). 73
- Hermetic Wall Mounting Receptacle LJT00 (MS27469) 74
- Hermetic Jam Nut Receptacle LJT07 (MS27470),
  Hermetic Solder Mounting Receptacle LJTL (MS27471) 75
- Solder Wall Mounting Receptacle LJT00 (MS20026),
  Solder Line Receptacle LJT01 (MS20027) 76
- Solder Straight Plug LJT06 (MS20028),
  Solder Jam Nut Receptacle LJT07 (MS20029) 77
- Breakaway Fail-Safe Lanyard Release Plug 88-5388/91-5388 (MS27661) . . 78, 79
- Breakaway Fail-Safe How to Order (Military /Commercial). 80
- Accessories, Contacts, and Tools see pages 89-108

MIL-DTL-38999 Series I Typical Markets:

- Military & Commercial Aviation
- Military Vehicles
- Missiles & Ordnance
- C4ISR

Amphenol Aerospace

PART #

Part number reference. To complete, see how to order pages 46-50.

Commercial

Connector Type	Shell Style	Service Class	Shell Size & Insert Arrg	Contact Type	Alternate Position	Special Variations
LJT	**00**	RE	22-2	P	A	(XXX)

Military

MS Number	Service Class	Shell Size	Finish	Insert Arrg	Contact Style (P or S)	Alternate Position
MS27466	E	14	A	18	P	A

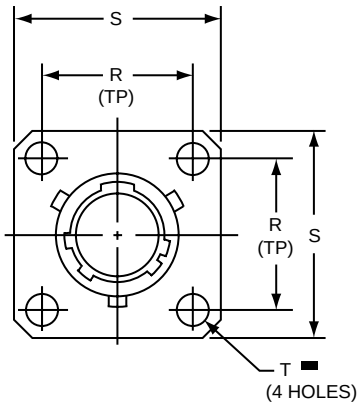

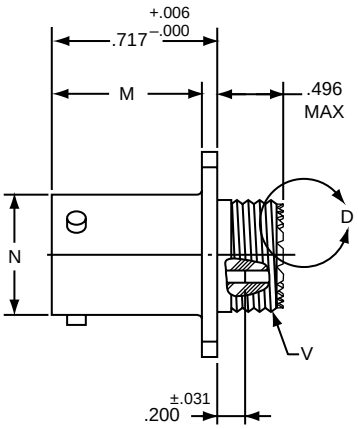

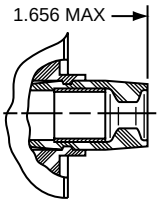

VIEW D ENLARGED
FOR COAXIAL USE ONLY

LJT00RE-XX-XXX (MS27466E)
LJT00RT-XX-XXX (MS27466T)

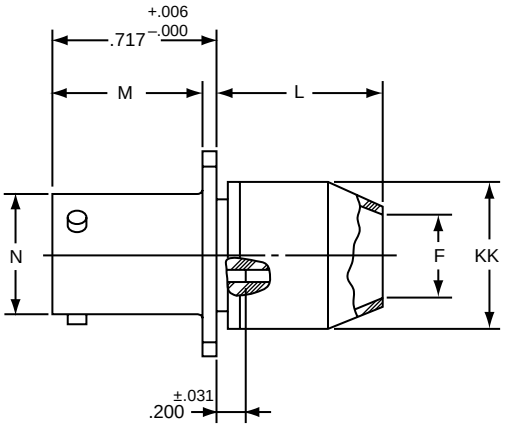

LJT00RP-XX-XXX (MS27466P)

■ ⊕ .005 DIA Ⓜ

Shell Size	F Dia. ±.010	L Max.	M +.000 –.005	N +.001 –.005	R (TP)	S ±.016	T Dia. ±.005	V Thread Class 2A (Plated)	KK Dia. Max
9	.444	.813	.632	.572	.719	.938	.128	.4375-28 UNEF	.608
11	.558	.813	.632	.700	.812	1.031	.128	.5625-24 UNEF	.734
13	.683	.813	.632	.850	.906	1.125	.128	.6875-24 UNEF	.858
15	.808	.813	.632	.975	.969	1.219	.128	.8125-20 UNEF	.984
17	.909	.813	.632	1.100	1.062	1.312	.128	.9375-20 UNEF	1.110
19	1.034	.813	.632	1.207	1.156	1.438	.128	1.0625-18 UNEF	1.234
21	1.159	.906	.602	1.332	1.250	1.562	.128	1.1875-18 UNEF	1.360
23	1.284	.906	.602	1.457	1.375	1.688	.147	1.3125-18 UNEF	1.484
25	1.409	.906	.602	1.582	1.500	1.812	.147	1.4375-18 UNEF	1.610

All dimensions for reference only.

Amphenol Aerospace

PART #

Part number reference. To complete, see how to order pages 46-50.

Commercial

Connector Type	Shell Style	Service Class	Shell Size & Insert Arrg	Contact Type	Alternate Position	Special Variations
LJTPQ	00	RE	22-2	P	A	(XXX)

Military

MS Number	Service Class	Shell Size	Finish	Insert Arrg	Contact Style (P or S)	Alternate Position
MS27656	E	14	A	18	P	A

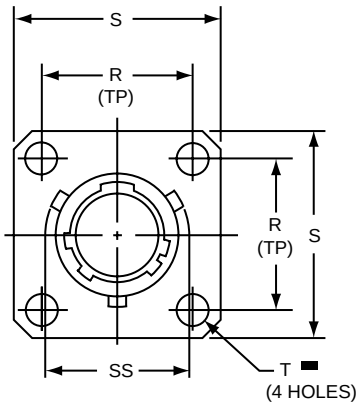

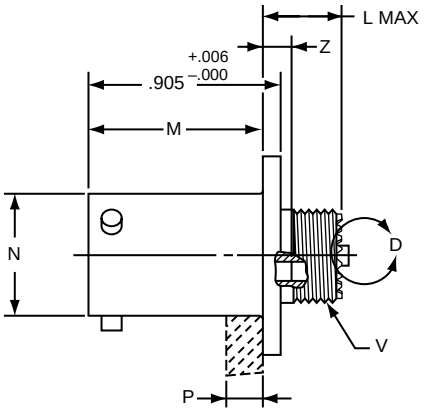

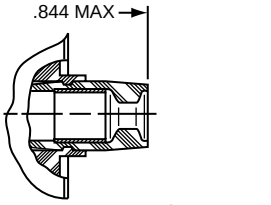

LJTPQ00RE-XX-XXX (MS27656E)
LJTPQ00RT-XX-XXX (MS27656T)

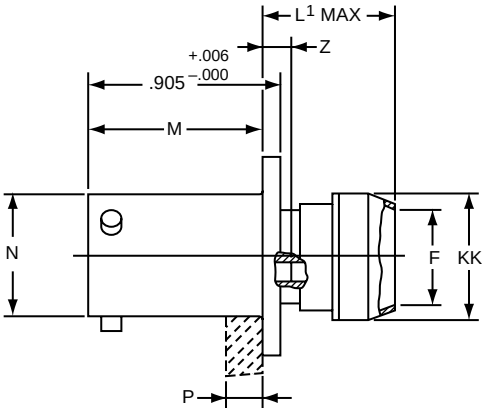

LJTPQ00RP-XX-XXX (MS27656P)

▬ ⊕ .005 DIA Ⓜ

Shell Size	F Dia. ±.010	L Max.	L[1] Max.	M +.000 –.005	N Dia.	P Max. Panel Thickness	R (TP)	S +.011 –.010	T Dia. ±.005	V Thread Class 2A (Plated)	Z Max	KK Dia. Max	SS Dia. +.000 –.016
9	.444	.453	.641	.820	.572	.234	.719	.938	.128	.4375-28 UNEF	.138	.625	.662
11	.558	.453	.641	.820	.700	.234	.812	1.031	.128	.5625-24 UNEF	.138	.750	.810
13	.683	.453	.641	.820	.850	.234	.906	1.125	.128	.6875-24 UNEF	.138	.875	.960
15	.808	.453	.641	.820	.975	.234	.969	1.219	.128	.8125-20 UNEF	.138	1.000	1.085
17	.909	.453	.641	.820	1.100	.234	1.062	1.312	.128	.9375-20 UNEF	.138	1.125	1.210
19	1.034	.453	.641	.820	1.207	.234	1.156	1.438	.128	1.0625-18 UNEF	.138	1.250	1.317
21	1.159	.484	.672	.790	1.332	.204	1.250	1.562	.128	1.1875-18 UNEF	.168	1.375	1.442
23	1.284	.484	.672	.790	1.457	.204	1.375	1.688	.147	1.3125-18 UNEF	.168	1.500	1.567
25	1.409	.484	.672	.790	1.582	.193	1.500	1.812	.147	1.4375-18 UNEF	.168	1.625	1.692

All dimensions for reference only.
Note: MS27656 superseded MS 27515.

PART #
Commercial

Part number reference. To complete, see how to order pages 46-50.

Connector Type	Shell Style	Service Class	Shell Size & Insert Arrg	Contact Type	Alternate Position	Special Variations
LJT	**01**	*RE*	*22-2*	*P*	*A*	*(XXX)*

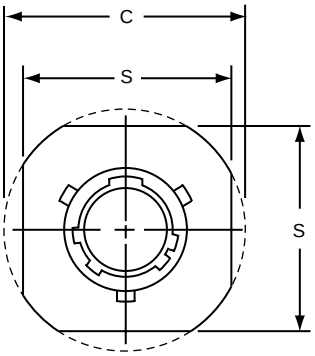

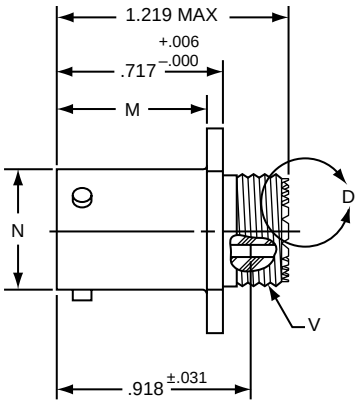

LJT01RE-XX-XXX
LJT01RT-XX-XXX

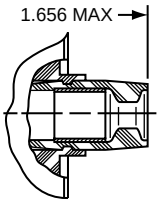

VIEW D ENLARGED
FOR COAXIAL USE ONLY

Shell Size	C Max.	M +.000 −.005	N +.001 −.005	S ±.016	V Thread Class 2A (Plated)
9	1.094	.632	.572	.938	.4375-28 UNEF
11	1.188	.632	.700	1.031	.5625-24 UNEF
13	1.281	.632	.850	1.125	.6875-24 UNEF
15	1.375	.632	.975	1.219	.8125-20 UNEF
17	1.469	.632	1.100	1.312	.9375-20 UNEF
19	1.594	.632	1.207	1.438	1.0625-18 UNEF
21	1.719	.602	1.332	1.562	1.1875-18 UNEF
23	1.844	.602	1.457	1.688	1.3125-18 UNEF
25	1.969	.602	1.582	1.812	1.4375-18 UNEF

All dimensions for reference only.

Amphenol Aerospace

Box Mounting Receptacle (Back Panel Mounting)

PART #

Part number reference. To complete, see how to order pages 46-50.

Commercial

Connector Type	Shell Style	Service Class	Shell Size & Insert Arrg	Contact Type	Alternate Position	Special Variations
LJT/LJTP	02	RE	22-2	P	A	(XXX)

Military

MS Number	Service Class	Shell Size	Finish	Insert Arrg	Contact Style (P or S)	Alternate Position
MS27496	E	14	A	18	P	A
MS27505	E	14	A	18	P	A

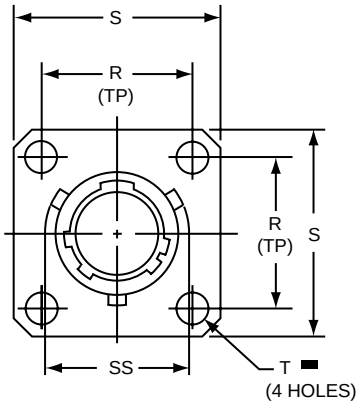

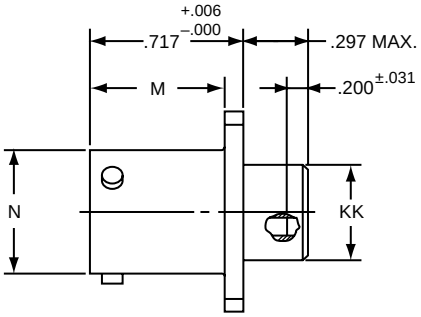

LJT02RE-XX-XXX (MS27496E)

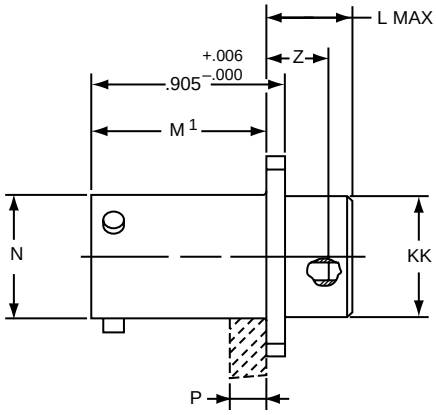

LJTP02RE-XX-XXX (MS27505E)

■ ⊕ .005 DIA Ⓜ

Shell Size	L Max.	M +.000 –.005	M[1] +.001 –.005	N Dia +.001 –.005	P Max. Panel Thickness	R (TP)	S +.011 –.010	T Dia. ±.005	Z ±.031	KK Dia. +.006 –.005	SS Dia. +.000 –.016
9	.203	.632	.820	.572	.234	.719	.938	.128	.107	.433	.662
11	.203	.632	.820	.700	.234	.812	1.031	.128	.107	.557	.810
13	.203	.632	.820	.850	.234	.906	1.125	.128	.107	.676	.960
15	.203	.632	.820	.975	.234	.969	1.219	.128	.107	.801	1.085
17	.203	.632	.820	1.100	.234	1.062	1.312	.128	.107	.926	1.210
19	.203	.632	.820	1.207	.234	1.156	1.438	.128	.107	1.032	1.317
21	.234	.602	.790	1.332	.204	1.250	1.562	.128	.137	1.157	1.442
23	.234	.602	.790	1.457	.204	1.375	1.688	.147	.137	1.282	1.567
25	.234	.602	.790	1.582	.193	1.500	1.812	.147	.137	1.407	1.692

All dimensions for reference only.

LJT06R (MS27467) Series I – Crimp
Straight Plug

PART #

Commercial

Part number reference. To complete, see how to order pages 46-50.

Connector Type	Shell Style	Service Class	Shell Size & Insert Arrg	Contact Type	Alternate Position	Special Variations
LJT	**06**	RE	22-2	P	A	(XXX)

Military

MS Number	Service Class	Shell Size	Finish	Insert Arrg	Contact Style (P or S)	Alternate Position
MS27467	E	14	A	18	P	A

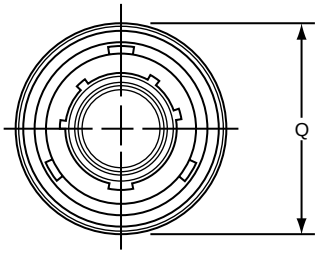

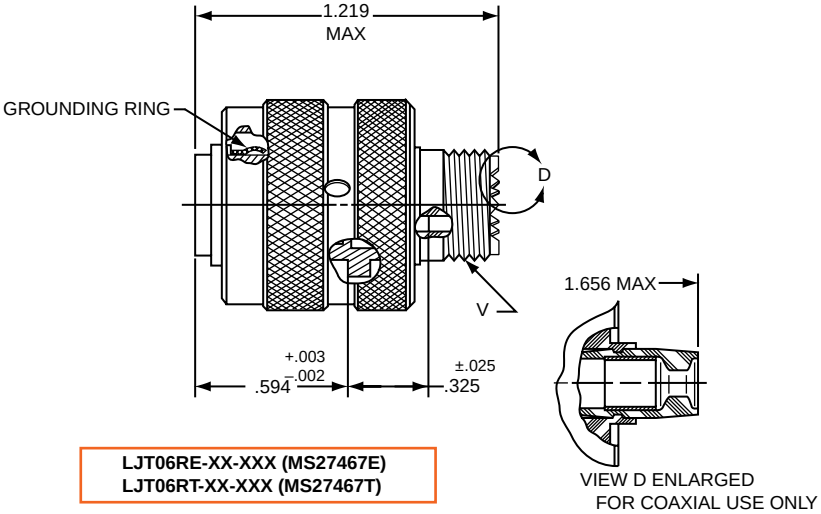

LJT06RE-XX-XXX (MS27467E)
LJT06RT-XX-XXX (MS27467T)

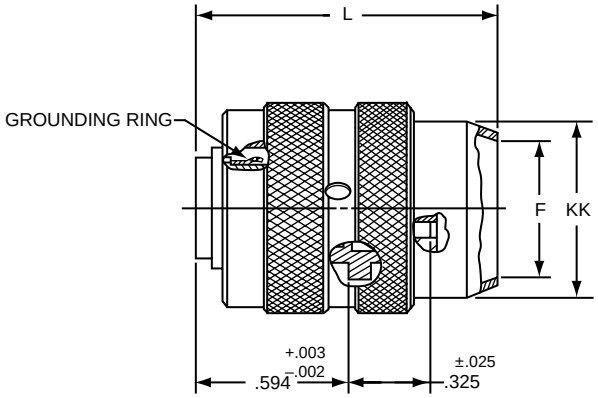

LJT06RP-XX-XXX (MS27467P)

Shell Size	F Dia. ±.010	L Max.	Q Max.	V Thread Class 2A (Plated)	KK Dia. Max.
9	.444	1.531	.844	.4375-28 UNEF	.608
11	.528	1.531	.969	.5625-24 UNEF	.734
13	.683	1.531	1.141	.6875-24 UNEF	.858
15	.808	1.531	1.266	.8125-20 UNEF	.984
17	.909	1.531	1.391	.9375-20 UNEF	1.110
19	1.034	1.531	1.500	1.0625-18 UNEF	1.234
21	1.159	1.625	1.625	1.1875-18 UNEF	1.360
23	1.284	1.625	1.750	1.3125-18 UNEF	1.484
25	1.409	1.625	1.875	1.4375-18 UNEF	1.610

All dimensions for reference only.

Amphenol Aerospace

PART #
Commercial

Part number reference. To complete, see how to order pages 46-50.

Connector Type	Shell Style	Service Class	Shell Size & Insert Arrg	Contact Type	Alternate Position	Special Variations
LJT	07	RE	22-2	P	A	(XXX)

Military

MS Number	Service Class	Shell Size	Finish	Insert Arrg	Contact Style (P or S)	Alternate Position
MS27498	E	14	A	18	P	A

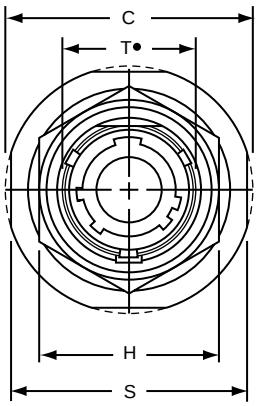

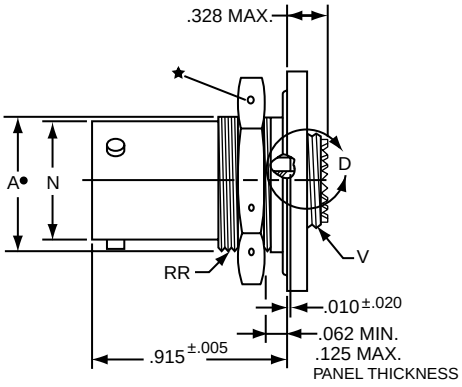

LJT07RE-XX-XXX (MS27468E)
LJT07RT-XX-XXX (MS27468T)

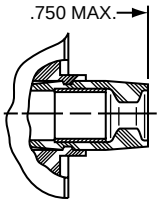

VIEW D ENLARGED
FOR COAXIAL USE ONLY

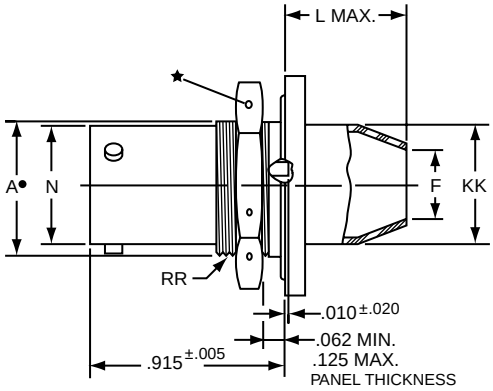

LJT07RP-XX-XXX (MS27468P)

★ .059 Dia. Min. 3 lockwire holes.
Formed lockwire hole design (6 holes) is optional.
• "D" shaped mounting hole dimensions.

Shell Size	A• +.000 –.010	C Max.	F Dia. ±.010	H Hex +.017 –.016	L Max.	N +.001 –.005	S ±.016	T• +.010 –.000	V Thread Class 2A (Plated)	KK Dia. Max.	RR Thread Class 2A (Plated)
9	.669	1.199	.444	.875	.625	.572	1.062	.697	.4375-28 UNEF	.608	.6875-24 UNEF
11	.769	1.386	.558	1.000	.625	.700	1.250	.822	.5625-24 UNEF	.734	.8125-20 UNEF
13	.955	1.511	.683	1.188	.625	.850	1.375	1.007	.6875-24 UNEF	.858	1.0000-20 UNEF
15	1.084	1.636	.808	1.312	.625	.975	1.500	1.134	.8125-20 UNEF	.984	1.1250-18 UNEF
17	1.208	1.761	.909	1.438	.625	1.100	1.625	1.259	.9375-20 UNEF	1.110	1.2500-18 UNEF
19	1.333	1.949	1.034	1.562	.656	1.207	1.812	1.384	1.0625-18 UNEF	1.234	1.3750-18 UNEF
21	1.459	2.073	1.159	1.688	.750	1.332	1.938	1.507	1.1875-18 UNEF	1.360	1.5000-18 UNEF
23	1.580	2.199	1.284	1.812	.750	1.457	2.062	1.634	1.3125-18 UNEF	1.484	1.6250-18 UNEF
25	1.709	2.323	1.409	2.000	.750	1.582	2.188	1.759	1.4375-18 UNEF	1.610	1.7500-18 UNS

All dimensions for reference only.

LJT00 (MS27469) Series I – Hermetic
Wall Mounting Receptacle

PART #
Commercial

Part number reference. To complete, see how to order pages 46-50.

Connector Type	Shell Style	Service Class	Shell Size & Insert Arrg	Contact Type	Alternate Position	Special Variations
LJT/LJTS	**00**	*Y*	*22-2*	*P*	*A*	*(XXX)*

Military

MS Number	Service Class	Shell Size	Finish	Insert Arrg	Contact Style (P or S)	Alternate Position
MS27469	**Y**	*14*	*D*	*18*	*P*	*A*

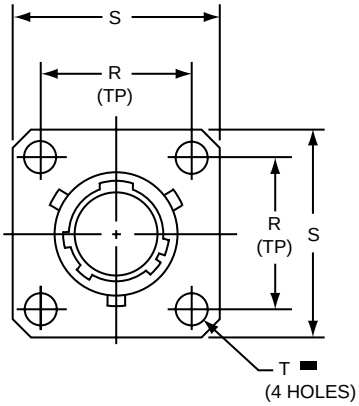

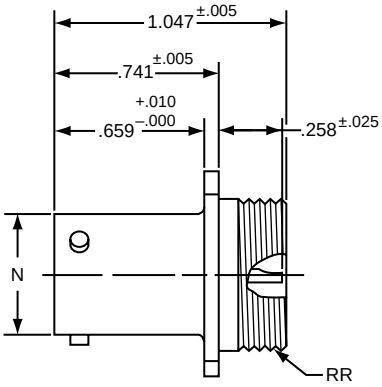

*** LJT00H-XX-XXX**
**** LJT00Y-XX-XXX (MS27469YXXD)**
***** LJTS00Y-XX-XXX (MS27469YXXE)**

▬ ⊕ .005 DIA Ⓜ

* Long Junior Tri-Lock
** Interfacial seal wafer
*** High temperature version, interfacial seal wafer with stainless steel shell

Shell Size	N Dia. +.001 –.005	R (TP)	S ±.016	T Dia. ±.005	RR Thread Class 2A
9	.572	.719	.938	.128	.6875-24 UNEF
11	.700	.812	1.031	.128	.8125-20 UNEF
13	.850	.906	1.125	.128	.9375-20 UNEF
15	.975	.969	1.219	.128	1.0625-18 UNEF
17	1.100	1.062	1.312	.128	1.1875-18 UNEF
19	1.207	1.156	1.438	.128	1.3125-18 UNEF
21	1.332	1.250	1.562	.128	1.4375-18 UNEF
23	1.457	1.375	1.688	.147	1.5625-18 UNEF
25	1.582	1.500	1.812	.147	1.6875-18 UNEF

All dimensions for reference only.

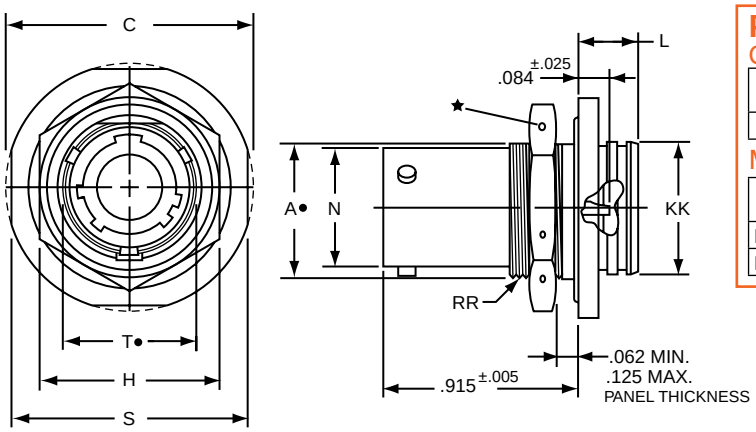

PART #

Commercial

Part number reference. To complete, see how to order pages 46-50.

Connector Type	Shell Style	Service Class	Shell Size & Insert Arrg	Contact Type	Alternate Position	Special Variations
LJT/LJTS	H	RE	22-2	P	A	(XXX)

Military

MS Number	Service Class	Shell Size	Finish	Insert Arrg	Contact Style (P or S)	Alternate Position
MS27470	Y	14	A	18	P	A
MS27471	Y	14	A	18	P	A

Shell Size	A• +.000 –.010	C Max.	H Hex +.017 –.016	L Max.	N +.000 –.005	S ±.016	T• +.010 –.000	KK +.011 –.000	RR Thread Class 2A (Plated)
9	.669	1.199	.875	.297	.572	1.062	.697	.642	.6875-24 UNEF
11	.769	1.386	1.000	.297	.700	1.250	.822	.766	.8125-20 UNEF
13	.955	1.511	1.188	.297	.850	1.375	1.007	.892	1.0000-20 UNEF
15	1.084	1.636	1.312	.297	.975	1.500	1.134	1.018	1.1250-18 UNEF
17	1.208	1.761	1.438	.297	1.100	1.625	1.259	1.142	1.2500-18 UNEF
19	1.333	1.949	1.562	.328	1.207	1.812	1.384	1.268	1.3750-18 UNEF
21	1.459	2.073	1.688	.328	1.332	1.938	1.507	1.392	1.5000-18 UNEF
23	1.580	2.199	1.812	.328	1.457	2.062	1.634	1.518	1.6250-18 UNEF
25	1.709	2.328	2.000	.328	1.582	2.188	1.759	1.642	1.7500-18 UNS

All dimensions for reference only.

* LJT07H-XX-XXX
** LJT07Y-XX-XXX (MS27470YXXD)
*** LJTS07Y-XX-XXX (MS27470YXXE)

★ .059 Dia. Min. 3 lockwire holes. Formed lockwire hole design (6 holes) is optional.
• "D" shaped mounting hole dimensions.
* *Long Junior Tri-Lock
** Interfacial seal wafer
*** High temperature version, interfacial seal wafer with stainless steel shell

LJTI (MS27471) Series I

– Hermetic Solder Mounting Receptacle

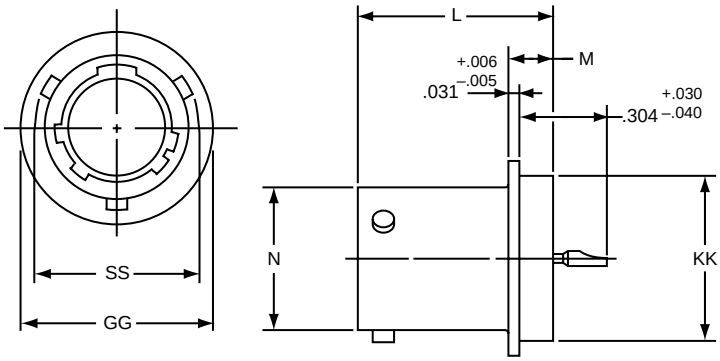

* Long Junior Tri-Lock
** Interfacial seal wafer
*** High temperature version, interfacial seal wafer with stainless steel shell

Shell Size	N Dia. +.001 –.005	SS Dia. +.000 –.016	L +.011 –.000	M +.006 –.005	GG Dia. +.011 –.010	KK Dia. +.001 –.005
9	.572	.662	.789	.125	.750	.672
11	.700	.810	.789	.125	.844	.781
13	.850	.960	.789	.125	.969	.906
15	.975	1.085	.789	.125	1.094	1.031
17	1.100	1.210	.789	.125	1.218	1.156
19	1.207	1.317	.789	.125	1.312	1.250
21	1.332	1.442	.789	.125	1.438	1.375
23	1.457	1.567	.821	.156	1.563	1.500
25	1.582	1.692	.821	.156	1.688	1.625

* LJTIH-XX-XXX
** LJTIY-XX-XXX (MS27471YXXD)
*** LJTSIY-XX-XXX (MS27471YXXE)

All dimensions for reference only.
Weld mounting hermetic receptacle also available.
Consult Amphenol, Sidney, NY for availability and dimensions.

LJT00 (MS20026) Series I – Solder
Wall Mounting Receptacle

Military qualified to MIL-DTL-27599

PART #

Part number reference. To complete, see how to order pages 46-50.

Commercial

Connector Type	Shell Style	Service Class	Shell Size & Insert Arrg	Contact Type	Alternate Position	Special Variations
LJT	00	P	22-2	P	A	(XXX)

Military

MS Number	Service Class	Shell Size	Finish	Insert Arrg	Contact Style (P or S)	Alternate Position
MS20026	T	14	A	18	P	A
MS20027	T	14	A	18	P	A

LJT00T-XX-XXX (MS20026T)

LJT00P-XX-XXX

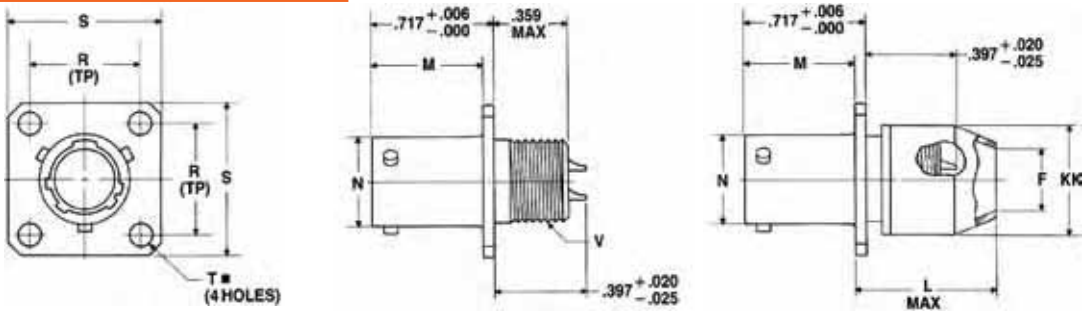

■ ⊕ .005 DIA Ⓜ

NOTE: For availability of back panel mounting types, check with nearest sales office or call Amphenol, Sidney, NY.

Shell Size	F Dia.	L Max.	M +.000 –.005	N +.001 –.005	R (TP)	S ±.016	T Dia. ±.005	V Thread Class 2A UNEF (Plated)	KK Dia. Max.
9	.327	.625	.632	.572	.719	.938	.128	.4375-28	.608
11	.444	.625	.632	.700	.812	1.031	.128	.5625-24	.734
13	.558	.625	.632	.850	.906	1.125	.128	.6875-24	.858
15	.683	.625	.632	.975	.969	1.219	.128	.8125-20	.984
17	.808	.625	.632	1.100	1.062	1.312	.128	.9375-20	1.110
19	.909	.625	.632	1.207	1.156	1.438	.128	1.0625-18	1.234
21	1.034	.703	.602	1.332	1.250	1.562	.128	1.1875-18	1.360
23	1.159	.703	.602	1.457	1.375	1.688	.147	1.3125-18	1.484
25	1.284	.703	.602	1.582	1.500	1.812	.147	1.4375-18	1.610

LJT01 (MS20027) Series I – Solder
Line Receptacle

Military qualified to MIL-DTL-27599

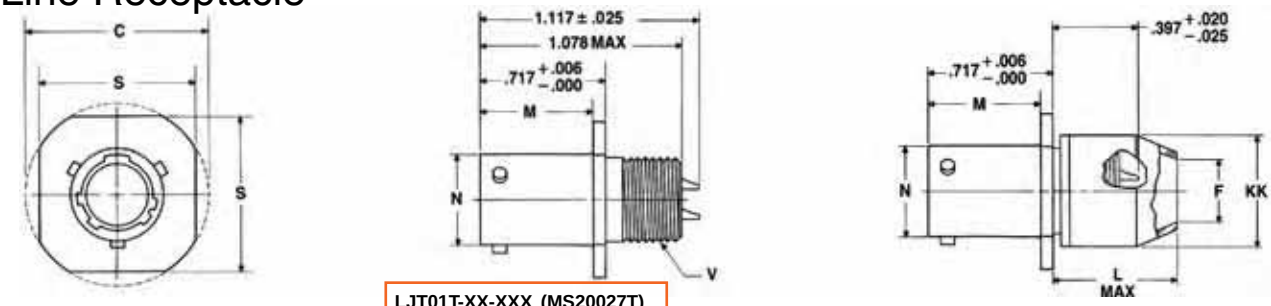

LJT01T-XX-XXX (MS20027T)

LJT01P-XX-XXX

Shell Size	C Max.	F Dia.	L Max.	M +.000 –.005	N +.001 –.005	S ±.016	V Thread Class 2A UNEF (Plated)	KK Dia. Max.
9	1.094	.327	.625	.632	.572	.938	.4375-28	.608
11	1.188	.444	.625	.632	.700	1.031	.5625-24	.734
13	1.281	.558	.625	.632	.850	1.125	.6875-24	.858
15	1.375	.683	.625	.632	.975	1.219	.8125-20	.984
17	1.469	.808	.625	.632	1.100	1.312	.9375-20	1.110
19	1.594	.909	.625	.632	1.207	1.438	1.0625-18	1.234
21	1.719	1.034	.703	.602	1.332	1.562	1.1875-18	1.360
23	1.844	1.159	.703	.602	1.457	1.688	1.3125-18	1.484
25	1.969	1.284	.703	.602	1.582	1.812	1.4375-18	1.610

All dimensions for reference only.

LJT06 (MS20028) Series I – Solder

Straight Plug

Military qualified to MIL-DTL-27599

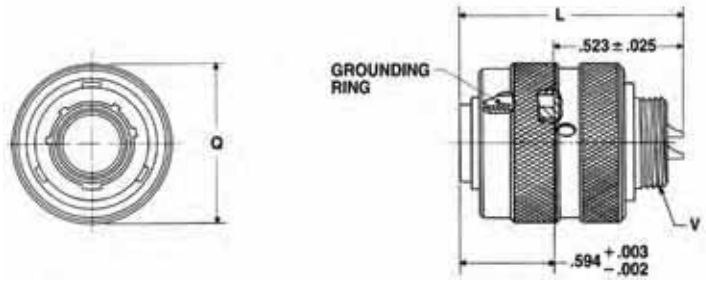

PART #

Commercial

Part number reference. To complete, see how to order pages 46-50.

Connector Type	Shell Style	Service Class	Shell Size & Insert Arrg	Contact Type	Alternate Position	Special Variations
LJT	06	T	22-2	P	A	(XXX)

Military

MS Number	Service Class	Shell Size	Finish	Insert Arrg	Contact Style (P or S)	Alternate Position
MS20028	**T**	14	A	18	P	A
MS20029	T	14	A	18	P	A

LJT06T-XX-XXX (MS20028T)

Shell Size	F Dia.	L Max.	L¹ Max.	Q Max.	V Thread Class 2A UNEF (Plated)	KK Dia. Max.
9	.327	1.128	1.488	.844	.4375-28	.608
11	.444	1.128	1.488	.969	.5625-24	.734
13	.558	1.128	1.488	1.141	.6875-24	.858
15	.683	1.128	1.488	1.266	.8125-20	.984
17	.808	1.128	1.488	1.391	.9375-20	1.110
19	.909	1.128	1.488	1.500	1.0625-18	1.234
21	1.034	1.128	1.566	1.625	1.1875-18	1.360
23	1.159	1.128	1.566	1.750	1.3125-18	1.484
25	1.284	1.191	1.644	1.875	1.4375-18	1.610

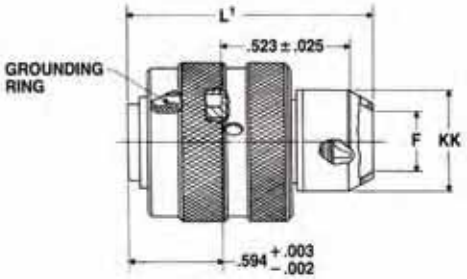

LJT06P-XX-XXX

LJT07 (MS20029) Series I – Solder

Military qualified to MIL-DTL-27599

Jam Nut Receptacle

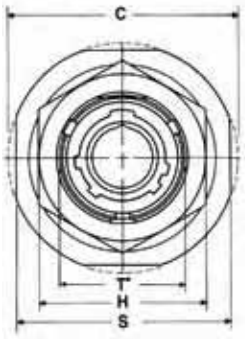

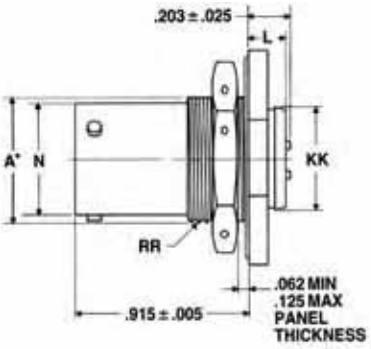

LJT07T-XX-XXX (MS20029T)

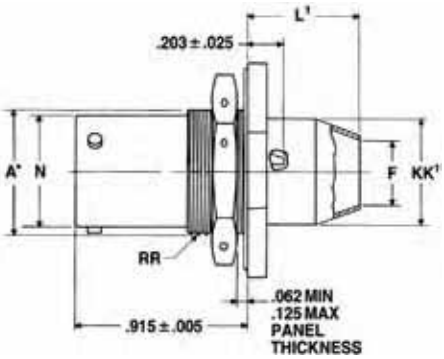

LJT07P-XX-XXX (MS20029P)

- "D" shaped mounting hole dimensions

Shell Size	A• +.000 −.010	C Max.	F Dia.	H Hex +.017 −.016	L Max.	L¹ Max.	N +.001 −.005	S ±.016	T• +.010 −.000	KK +.011 −.000	KK¹ Dia. Max.	RR Thread Class 2A (Plated)
9	.669	1.199	.327	.875	.234	.625	.572	1.062	.697	.516	.608	.6875-24UNEF
11	.769	1.386	.444	1.000	.234	.625	.700	1.250	.822	.642	.734	.8125-20UNEF
13	.955	1.511	.558	1.188	.234	.625	.850	1.375	1.007	.766	.858	1.0000-20UNEF
15	1.084	1.636	.683	1.312	.234	.625	.975	1.500	1.134	.892	.984	1.1250-18UNEF
17	1.208	1.761	.808	1.438	.234	.625	1.100	1.625	1.259	1.018	1.110	1.2500-18UNEF
19	1.333	1.949	.909	1.562	.266	.625	1.207	1.812	1.384	1.142	1.234	1.3750-18UNEF
21	1.459	2.073	1.034	1.688	.266	.656	1.332	1.938	1.507	1.268	1.360	1.5000-18UNEF
23	1.580	2.199	1.159	1.812	.266	.750	1.457	2.062	1.634	1.392	1.484	1.6250-18UNEF
25	1.709	2.323	1.284	2.000	.266	.750	1.582	2.188	1.759	1.518	1.610	1.7500-18UNS

All dimensions for reference only.

Series I, LJT Breakaway Fail Safe
Lanyard Release Plug Insert Availability

INSERT AVAILABILITY

Shell Size / Insert Arrangement	Service Rating	Total Contacts	Contact Size						
			22D	20	16	12	12 Coax	8 Coax*	8 Twinax
11-2	I	2			2				
11-35	M	13	13						
11-98	I	6		6					
13-4	I	4			4				
13-8	I	8		8					
13-35	M	22	22						
13-98	I	10		10					
15-5	II	5			5				
15-15	I	15		14	1				
15-18	I	18		18					
15-19	I	19		19					
15-35	M	37	37						
15-97	I	12		8	4				
17-6	I	6				6			
17-8	II	8			8				
17-26	I	26		26					
17-35	M	55	55						
17-99	I	23		21	2				
19-11	II	11			11				
19-32	I	32		32					
19-35	M	66	66						
21-11	I	11				11			
21-16	II	16			16				
21-35	M	79	79						
21-39	I	39		37	2				
21-41	I	41		41					
23-21	II	21			21				
23-35	M	100	100						
23-53	I	53		53					
23-54	M	53	40		9	4			
23-55	I	55		55					
25-4	I	56		48	8				
25-19	I	19				19			
25-20	N	30		10	13		4		3
25-24	I	24			12	12			
25-29	I	29			29				
25-35	M	128	128						
25-43	I	43		23	20				
25-46	I	46		40	4			2*	
25-61	I	61		61					

LJT Lanyard Separation Forces		
Shell Size	Straight Plug (lbs. max.)	15 Degree Pull (lbs. Max.)
11 13 15	45	55
17 19 21 23 25	90	100

* For RG 180/U and RG 195/U cables only. (Check Amphenol Aerospace, Sidney, NY for other cable applications). For availability of other insert arrangements and accessories consult Amphenol Aerospace.

TABLE I
INSERT ARRANGEMENT CODE

Basic Part Number	MIL-DTL-38999 Insert Arrangement
88/91-538808	11-2
06	11-35
07	11-98
10	13-4
11	13-8
13	13-98
14	13-35
18	15-5
23	15-15
22	15-18
19	15-19
20	15-35
27	17-6
28	17-8
29	17-26
30	17-35
31	17-99
37	19-11
39	19-32
40	19-35
47	21-11
48	21-16
49	21-35
50	21-41
51	21-39
57	23-21
58	23-35
59	23-53
61	23-54
60	23-55
66	25-19
74	25-20
67	25-29
68	25-35
69	25-43
70	25-61
71	25-46
72	25-2
74	25-4

TABLE II LANYARD LENGTH CODES

Lanyard Length (in.) ±.250	MS	Commercial Code
4.000		40
4.250		41
4.500		42
4.750		43
5.000		50
5.250		51
5.500		52
5.750		53
6.000	No	60
6.250	Code	61
6.500		62
6.750	Std.	63
7.000	Length	70
7.250	6.250	71
7.500		72
7.750		73
8.000		80
8.250		81
8.500		82
8.750		83
9.000		90
9.250		91
9.500		92
9.750		93

Amphenol Aerospace

HOW TO ORDER - BY MILITARY PART NUMBER FAIL SAFE MS27661

1. MS Number	2. Service Class	3. Shell Size	4. Finish	5. Insert Arrg.	6. Contact Style	7. Alternate Position
MS27661	T	17	B	35	P	A

1. MS27661 Number

MS Number designates MIL-DTL-38999, Series I LJT Lanyard Release Plug

2. Select a Service Class

E	For environmental crimp applications (inactive for new design)
T	For environmental crimp applications with serrations on rear threads of shell

3. Select a Shell Size

MIL-DTL-38999, sizes 11 through 25, see chart on page 78.

4. Select a Finish

B	Designates corrosion resistant olive drab cadmium plated aluminum, 500 hour extended salt spray, EMI shielding effectiveness –50dB @ 10 GHz specification min., 175°C
F	Designates electroless nickel plated aluminum, 48 hour salt spray, EMI shielding effectiveness –65dB @10 GHz500 specification min., 200°C

These are standard finishes. Consult Amphenol Aerospace for variations.

5. Select an Insert Arrangement

MIL-DTL-38999, see insert identification chart on page 78.

6. Select a Contact Style

P	Designates Lanyard Release plug with pin contacts
S	Designates Lanyard Release plug with socket contacts

7. Alternate Keying Position

For alternate Position of connector (to prevent cross-mating) see LJT key/keyway rotation below. (No letter is required for normal)

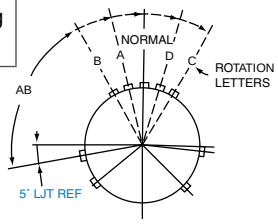

RELATIVE POSSIBLE POSITION OF ROTATED MASTER KEYWAY (front face of receptacle shown)

LJT Key/Keyway Rotation

AB ANGLE OF ROTATION (Degrees)					
Shell Size	Normal	A	B	C	D
9	95°	77°	-	-	113°
11	95°	81°	67°	123°	109°
13	95°	75°	63°	127°	115°
15	95°	74°	61°	129°	116°
17	95°	77°	65°	125°	113°
19	95°	77°	65°	125°	113°
21	95°	77°	65°	125°	113°
23	95°	80°	69°	121°	110°
25	95°	80°	69°	121°	110°

HOW TO ORDER - BY COMMERCIAL PART NUMBER FAIL SAFE 88-5388 OR 91-5388

1. Finish	2. Connector Type Identification	3. Shell Size & Insert Arrangement	4. Lanyard Length Code	5. Contact Type Alternate Rotation of Insert
88	5388	29	40	P

1. Select a Finish

88	Designates corrosion resistant olive drab cadmium plate over nickel, 500 hour extended salt spray, EMI –50dB @ 10 GHz specification min., 175°C
91	Designates electroless nickel plated aluminum, optimum EMI shielding effectiveness –65dB @ 10 GHz specification min., 48 hour salt spray, 200°C

These are standard finishes. Consult Amphenol Aerospace, Sidney, NY for variations.

2. Connector Type Identification

5388	Designates MIL-DTL-38999, Series I LJT Lanyard Release Plug

3. Select a Shell Size and Insert Arrangement

Shell sizes are MIL-DTL-38999, Series III from sizes 11 thru 25. The basic part number selected specifies the insert arrangement. See Table I (page 78) for coded part number that correlates to insert arrangement.

4. Select a Lanyard Length Code

See Table II (page 78) for lanyard length code number.

5. Select a Contact Type/Alternate Rotation of Insert

P	Designates Lanyard Release plug with pin contacts
S	Designates Lanyard Release plug with socket contacts

When an alternate position of the connector is required to prevent cross-mating, a different letter (other than P or S) is used. See alternate positioning for LJT (to your left), then convert to Amphenol commercial coding by the following chart below.

Pin Contacts		Socket Contacts	
MS Letter	Amphenol Letter	MS Letter	Amphenol Letter
P	P (normal)	S	S (normal)
PA	E	SA	F
PB	R	SB	T
PC	W	SC	X
PD	Y	SD	Z

Amphenol LJT Breakaway Fail Safe Connectors provide unequaled performance in environments requiring instant disengagement.

Designed to provide quick disconnect of a connector plug and receptacle with an axial pull on the lanyard, the "Breakaway" Fail Safe connector family offers a wide range of electrical and mechanical features:

- Instant decoupling and damage free separation
- Completely intermateable with standard LJT receptacles
- Inventory support commonality through the use of standard insert arrangements and contacts

Breakaway un-mating is initiated by applying a pull force to the lanyard which causes the operating sleeve on the plug to move away from the receptacle. Coupling segments on the plug then move away from the mating receptacle while expanding, thus releasing the receptacle. After completion of the un-mating sequence, spring compression returns the sleeve and segments to their original positions. Un-mating of the plug may also be accomplished by normal rotation of the coupling ring without affecting the breakaway capability.

The LJT Breakaway Fail Safe connector features which provide EMI EMP shielding in excess of MIL-DTL-38999 Series I requirements:

- Solid metal-to-metal coupling
- EMI grounding fingers
- Conductive finishes

Contact Amphenol Aerospace for more information on breakaway, quick-disconnect connectors. Other Amphenol cylindrical families (MIL-DTL-38999 Series III, MIL-DTL-26482, MIL-DTL-83723) also offer breakaway quick-disconnect connectors.

PART #
Commercial

Part number reference. To complete, see how to order pages 79.

Connector Type	Shell Style	Service Class	Shell Size & Insert Arrg	Contact Type	Alternate Position	Special Variations
88/91	**5388**	T	22-2	P	A	(XXX)

Military

MS Number	Service Class	Shell Size	Finish	Insert Arrg	Contact Style (P or S)	Alternate Position
MS27661	**T**	14	A	18	P	A

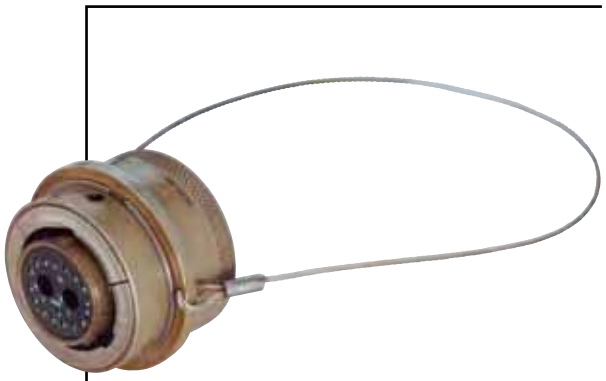

LJT Breakaway Fail Safe

In addition to standard Breakaway connectors, Amphenol also manufactures custom breakaway connectors including those with:

- Increased pull-force capability
- Custom lanyard lengths and backshells
- Low force separation capabilities
- Low insertion/separation force contacts
- Non-cadmium finishes
- Custom JT Series Breakaway designs have been developed for special applications; however the LJT Series is recommended over the JT Series for the quick-disconnect breakaway style.

LJT Fail Safe 88-5388/91-5388 (MS27661)

Lanyard Release Plug

* To complete order number see page 79.

Shell Size	A Dia. Max.	B Max.	D Max. Accessory Dia.	L Max.	V Thread UNEF Class 2A (Plated)
11	1.393	1.797	.740	1.703	.5625-24
13	1.558	1.969	.926	1.703	.6875-24
15	1.669	2.078	1.051	1.703	.8125-20
17	1.797	2.203	1.176	1.703	.9375-20
19	1.926	2.323	1.300	1.703	1.0625-18
21	2.054	2.469	1.426	1.703	1.1875-18
23	2.183	2.594	1.551	1.703	1.3125-18
25	2.293	2.703	1.676	1.766	1.4375-18

All dimensions for reference only.

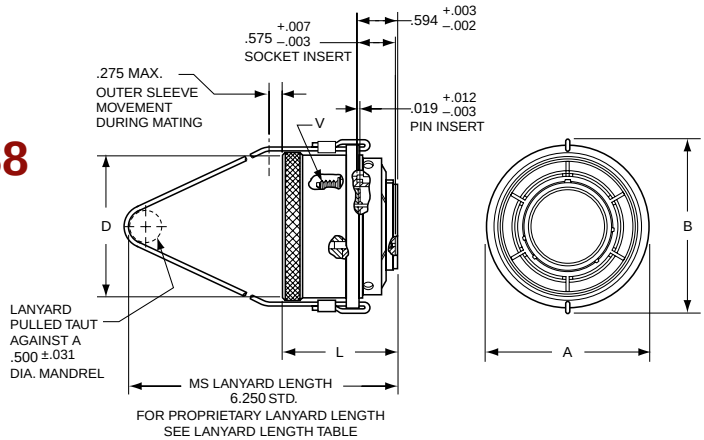

Amphenol Aerospace
New, Featured Products

Amphenol Aerospace

Amphenol has become the leader in interconnection products through its long history of engineering expertise for product solution solving. New and innovative solutions are under development every day within our highly skilled engineering departments who are teamed with marketing product managers and production specialists. They are always striving to meet new customer requirements in ever changing markets. The teams have a customer-driven approach to produce the end result: quality interconnect products that meet or exceed customer demands.

New/Featured

Breakaway Hybrid, Low Profile Lanyard Release Plug
Page 42

New Hybrid Lanyard Breakaway Fail Safe Connector with a composite thermoplastic outer operating sleeve for greater durability.

Solution: Navy F-18 program needed a break away plug that would have greater durability in weapons release application.

New/Featured

New HD38999 (High Density, Crimp) Plugs and receptacles
Page 43, 44

The HD38999 family of connectors was designed to work with existing Mil-specified 38999 shells. The HD38999 has 30% more contacts, it still performs to minimum electrical requirements of standard 38999 connectors.

Solution: 30% more contact density in 38999 Series III Shells

New/Featured

Matrix MIL-DTL-5015 with RADSOK® Contacts
Page 193

A special design of the Matrix MIL-DTL-5015, Series II connectors has added high amperage with the RADSOK® contacts in the plug instead of standard rear release crimp contacts.

Solution: Higher amperage capability in Matrix MIL-DTL-5015

New/Featured

Filter Connector with High Density Patterns
Page 289

New High Density Patterns are available in Filter 38999 connectors in standard Mil-Spec or filter length shells. They provide 30% more contact that standard insert arrangement patterns. See page 43 for ordering information.

Solution: Higher contact density and custom stand-off shell designs

New/Featured

ARINC 801 Connectors
Page 356

Designed for use in Amphenol ARINC 801 fiber optic connectors - manufactured to comply with ARINC 801. Genderless terminus allows for use on both sides of a connector.

Solution: Fiber Optic Termini & Connector that meet ARINC specifications

New/Featured

MT Ferrule Connectors
Page 359

Amphenol offers a multi-channel circular connector with high density MT fiber optics. High fiber density in a relatively small circular connector package with all the advantages of the MIL-DTL-38999 series III connector.

Solution: Higher Density Fiber Optics in MIL-DTL-38999

Amphenol Aerospace

Amphenol Aerospace is the leader in Interconnect solutions and provides companies with a product portfolio of connectors, accessories, cable assemblies and system integration for most applications across various industries. With connectors conforming to Military, Aerospace and Industrial standards in US, Europe and Asia, Amphenol assumes the leadership in meeting the interconnect needs of these market segments.

MIL-DTL-38999 Series III TV Tri-Start

- Backshells Accessories
- Dummy Contacts
- Wire Combs
- Receptacle Protection Cap
- Plug Protection Cap
- Dummy Receptacle
- Cable Clamps
- Contacts-Printed Circuit Board Wire Wrap
- Header Assembly

Application Tools

- Crimp Tools
- Insertion Tools
- Removal Tools

MIL-DTL-38999 Series II JT

- Receptacle Protection Cap
- Plug Protection Cap
- Strain Relief (Solder/Crimp Type)
- Contacts-Printed Circuit Board Wire Wrap
- Header Assembly

Application Tools

- Crimp Tools
- Insertion Tools
- Removal Tools

MIL-DTL-38999 Series I LJT

- Receptacle Protection Cap
- Plug Protection Cap
- Dummy Receptacle
- Cable Clamps
- Contacts-Printed Circuit Board Wire Wrap
- Header Assembly

Application Tools

- Crimp Tools
- Insertion Tools
- Removal Tools

SJT

- Receptacle Protection Cap
- Plug Protection Cap
- Dummy Receptacle
- Cable Clamps

Application Tools

- Crimp Tools
- Insertion Tools
- Removal Tools

MIL-DTL-38999, Series II JT
MIL-DTL-38999, Series I LJT

Strain relief (crimp type)

Series II JT **Series I LJT**

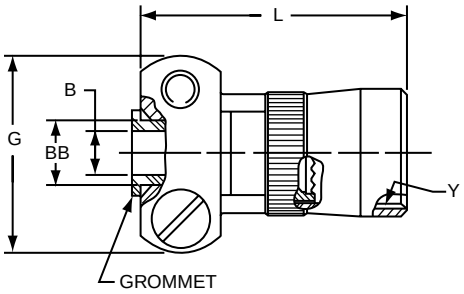

*** 10-405982-XXX (MS27506XXX-2 reference M85049/49)**

For MS stamping identification, accessories must be ordered by MS part number.
If ordered by 10-part number, they will be stamped with said number.

*To complete order number, add shell size and suffix number.

Finish	10-Number Suffix	MS27506 Suffix	M85049/49 Suffix
Chromate treat	-XX0		NA
Anodic coating	-XX5	CXX-2	(-2-XXA)
Cadmium plate nickel base	-XX7	AXX-2	NA
Olive drab, cadmium, nickel base	-XX9	BXX-2	(-2-XXW)
Electroless nickel	-XXG	FXX-2	(-2-XXN)

For example: Shell size 10 with cadmium plate, nickel base would be 10-405982-107 or M85049/49-2-10W

Shell Size	B Dia. +.010–.025	G Max.	L Max.	Y Thread (Modified)		BB Dia. +.000 –.011	Screw Size
				Size Class 2B	Modified Minor Dia.		
8	.125	.775	.984	.4375-28UNEF	.399 – .405	.250	6-32UNC
10	.188	.837	.984	.5625-24UNEF	.524 – .529	.312	6-32UNC
12	.312	.963	.984	.6875-24UNEF	.649 – .654	.438	6-32UNC
14	.375	1.087	1.234	.8125-20UNEF	.766 – .771	.562	6-32UNC
16	.500	1.150	1.234	.9375-20UNEF	.891 – .896	.625	6-32UNC
18	.625	1.400	1.234	1.0625-18UNEF	1.002 – 1.007	.750	8-32UNC
20	.625	1.400	1.234	1.1875-18UNEF	1.135 – 1.140	.750	8-32UNC
22	.750	1.587	1.359	1.3125-18UNEF	1.252 – 1.257	.938	8-32UNC
24	.800	1.681	1.281	1.4375-18UNEF	1.377 – 1.382	1.000	8-32UNC

All dimensions for reference only.
Note: For solder type cable clamp 10-241055-XXX (M85049/49) consult Amphenol, Sidney, NY.

Amphenol Aerospace

Series I LJT

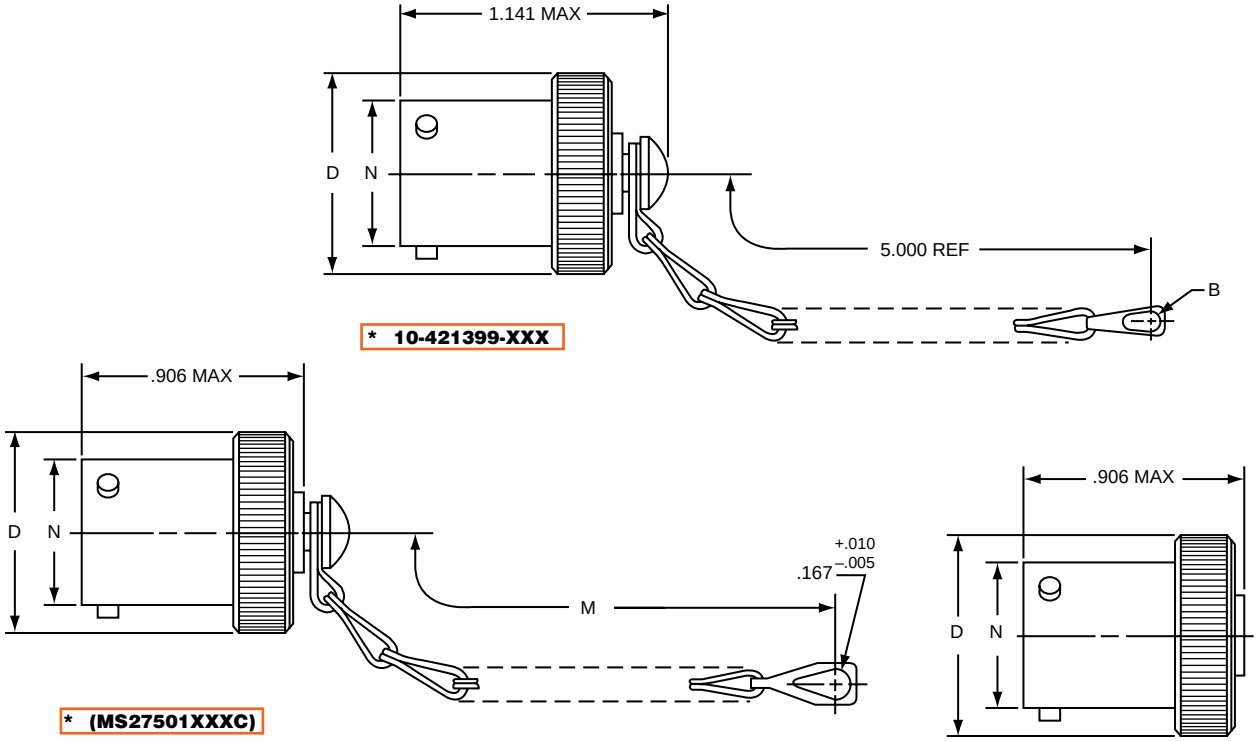

*To complete order number, add shell size and suffix number.
For example, shell size 11 with cadmium plate, nickel base would be 10-421399-117, MS27501A11C, MS27501A11A.

Shell Size	B Dia. Ref	D Dia. Max.	M ±.250	N Dia. +.001 –.005
9	.180	.812	3.000	.572
11	.180	.938	3.000	.700
13	.180	1.062	3.500	.850
15	.180	1.188	3.500	.975
17	.180	1.312	3.500	1.100
19	.209	1.438	3.500	1.207
21	.209	1.562	4.000	1.332
23	.209	1.688	4.000	1.457
25	.209	1.812	4.000	1.582

All dimensions for reference only.

Finish	10- Number Suffix	MS Number Suffix with chain	MS Number Suffix without chain
Chromate treat	-XX0		
Anodic coating	-XX5		
Cadmium Plate Nickel base	-XX7	AXXC	AXXA
Olive Drab, Cadmium, Nickel base	-XX9	BXXC	BXXA
Electroless nickel	-XXG	FXXC	FXXA

Series I LJT

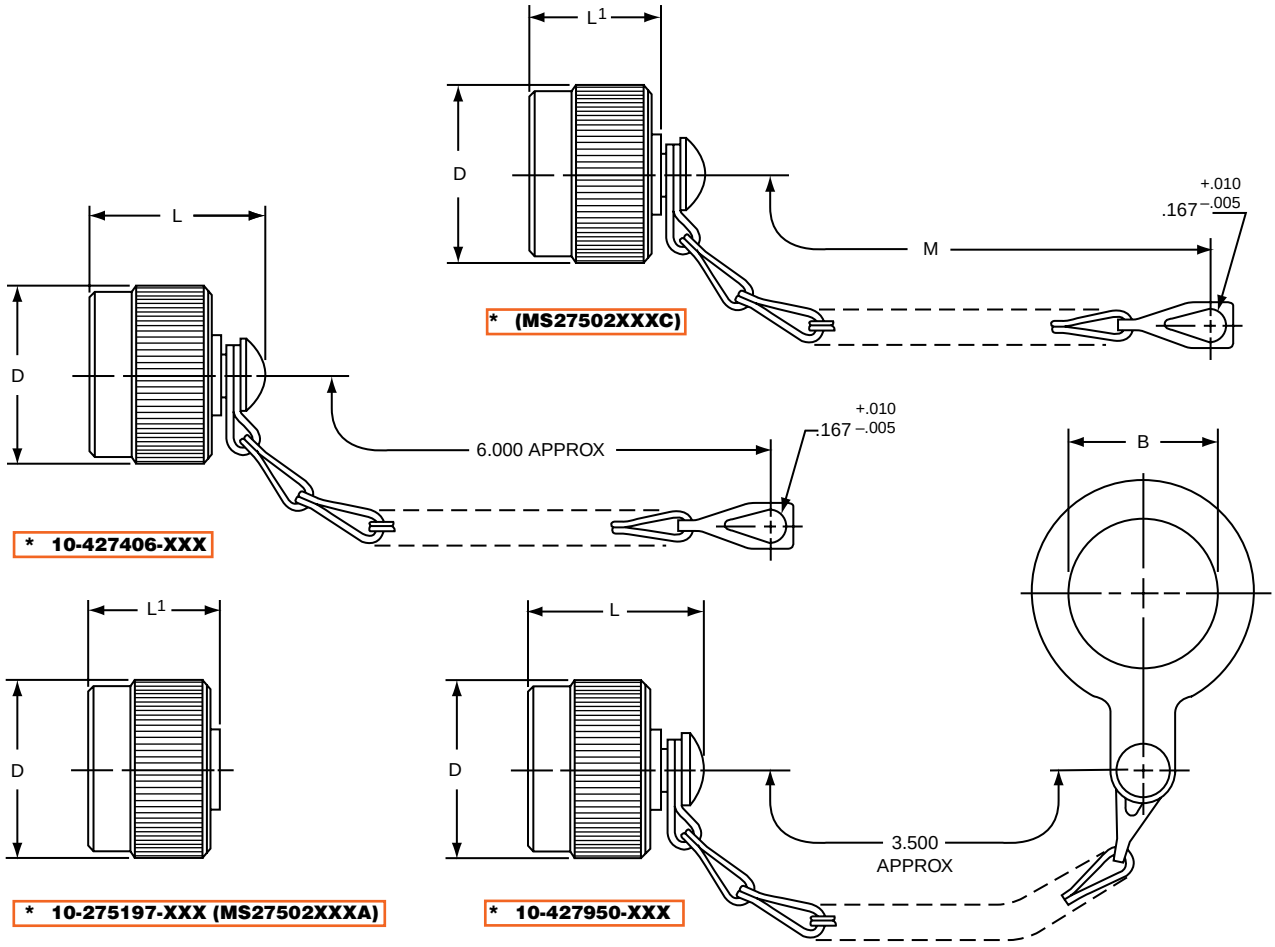

For MS stamping identification, accessories must be ordered by MS part number.
If ordered by 10- part number, they will be stamped with said number.
*To complete order number, add shell size and suffix number.
For example, shell size 11 with cadmium plate, nickel base would be 10-427406-117, MS27502A11C, MS27502A11A.

Shell Size	B Dia. +.010 –.000	D Dia. Max.	L Max.	L[1] Max	M ±.250
9	.703	.844	1.070	.844	3.000
11	.844	.969	1.070	.844	3.000
13	1.016	1.125	1.070	.844	3.500
15	1.141	1.250	1.070	.844	3.500
17	1.266	1.406	1.070	.844	3.500
19	1.391	1.500	1.070	.844	3.500
21	1.516	1.625	1.070	.844	4.000
23	1.641	1.750	1.070	.844	4.000
25	1.766	1.875	1.089	.875	4.000

All dimensions for reference only.

Finish	10-Number Suffix	MS Number Suffix with chain	MS Number Suffix without chain
Chromate treat	-XX0		
Anodic coating	-XX5	CXXC	CXXA
Cadmium Plate Nickel base	-XX7	AXXC	AXXA
Olive Drab, Cadmium, Nickel base	-XX9	BXXC	BXXA
Electroless Nickel	-XXG	FXXC	FXXA

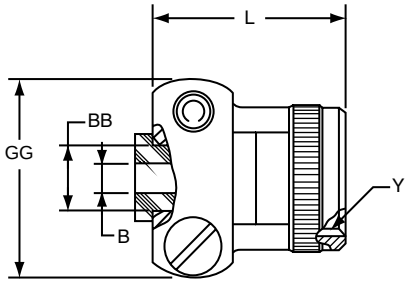

*** 10-436792-XXX**

For military type cable clamp see MS27506 or M85049/49 on page 98.

*To complete order number, add shell size and suffix number.

Finish	10-Number Suffix
Chromate treat	-XX0
Anodic coating	-XX5
Cadmium Plate Nickel base	-XX7
Olive Drab, Cadmium, Nickel base	-XX9
Electroless Nickel	-XXG

For example: Shell size 11 with cadmium plate, nickel base would be 10-436792-117.

Shell Size	B Dia. +.010 –.025	L Max.	Y Thread Class 2B (Plated)	GG Max.	BB Dia. +.000 –.011
9	.125	.859	.4375-28 UNEF	.775	.250
11	.188	.859	.5625-24 UNEF	.837	.312
13	.312	.859	.6875-24 UNEF	.963	.438
15	.375	1.109	.8125-20 UNEF	1.087	.562
17	.500	1.109	.9375-20 UNEF	1.150	.625
19	.625	1.109	1.0625-18 UNEF	1.400	.750
21	.625	1.109	1.1875-18 UNEF	1.400	.750
23	.750	1.234	1.3125-18 UNEF	1.587	.938
25	.800	1.234	1.4375-18 UNEF	1.681	1.000

All dimensions for reference only.

MIL-DTL-38999, Series II JT
MIL-DTL-38999, Series I LJT

Crimp/Thermocouple Contacts, Plastic Caps, Sealing Plugs

Series II JT

Series I LJT

JT/LJT Crimp Contacts

Contact Size	Pins (JT/LJT) MS No.	JT Sockets MS. No	LJT Sockets MS. No
8 (Coax)*	M39029/60-367	NA	M39029/59-366
8 (Twinax)	M39029/90-529***	NA	M39029/91-530
10 (Power)	M39029/58-528	NA	M39029/56-527
12	M39029/58-365	M39029/57-359	M39029/56-353
16	M39029/58-364	M39029/57-358	M39029/56-352
20	M39029/58-363	M39029/57-357	M39029/56-351
22	M39029/58-362	M39029/57-356	M39029/56-350
22M	M39029/58-361	M39029/57-355	M39029/56-349
22D	M39029/58-360	M39029/57-354	M39029/56-348

THERMOCOUPLE CONTACTS

Contact Size	Material	JT/LJT Pins	JT Sockets	LJT Sockets
20	Chromel	10-407862-310	10-407863-310	10-407236-310
	Alumel	10-407862-320	10-407863-320	10-407865-320
	Iron	10-407862-335	10-407863-335	10-407865-335
	Constantan	10-407862-342	10-407863-342	10-407865-342

Partial Listing. If you do not see the contact for your application, consult Amphenol Aerospace, Sidney, N.Y.

THERMOCOUPLE CONTACTS PYLE VERSION

Contact Size	Pins (JT/LJT)		Sockets (LJT)		Material
	Spec Number	Pyle Number	Spec Number	Pyle Number	
22D	M39029/87-472	T3-4022-10P	M39029/88-484	T3-4122-10P	CHROMEL
22D	M39029/87-471	T3-4022-10R	M39029/88-483	T3-4122-10R	ALUMEL
20	M39029/87-476	T3-4020-10P	M39029/88-488	TS-4120-10P	CHROMEL
20	M39029/87-475	T3-4020-10R	M39029/88-487	T3-4120-10R	ALUMEL
16	M39029/87-480	T3-4016-10P	M39029/88-492	T3-4116-10P	CHROMEL
16	M39029/87-479	T3-4016-10R	M39029/88-491	T3-4116-10R	ALUMEL

PLASTIC PROTECTION CAPS

Shell Size		Plug	Receptacle
8		10-70500-10	10-70506-10S
	9	10-70506-14	10-70500-10
10		10-70506-14	10-70506-12
	11	10-70506-16	10-70500-12
12		10-70506-16	10-70506-14
	13	10-70506-18	10-70500-14
14		10-70506-18	10-70506-16
	15	10-70506-20	10-70500-16
16		10-70506-20	10-70506-18
	17	10-70506-22	10-70500-18
18		10-70506-22	10-70506-20
	19	10-70506-24	10-70500-20
20		10-70506-24	10-70506-22
	21	10-70576-24	10-70500-22
22		10-70576-24	10-70506-24
	23	10-70506-28	10-70500-24
24		10-70506-28	10-70576-24
	25	10-558651-25	10-70506-28

SEALING PLUGS

Contact Size	Commercial No.	Military No.
8 (Coax)	10-482099-8	MS27488-8
8 (Twinax)	T3-4008-59P	N/A
10 (Power)	10-576225	N/A
12	10-405996-12	MS27488-12
16	10-405996-16	MS27488-16
20	10-405996-20	MS27488-20
22	10-405996-22	MS27488-22
22M	10-405996-22	MS27488-22
22D	10-405996-22	MS27488-22

MIL-DTL-38999, Series III TV, II JT, I LJT
Universal "Header Assembly"
for Flex Print or PC Board

Series III TV | **Series II JT** | **Series I LJT**

Mounts to all MIL-DTL-38999 and *MIL-DTL-26482 Connectors

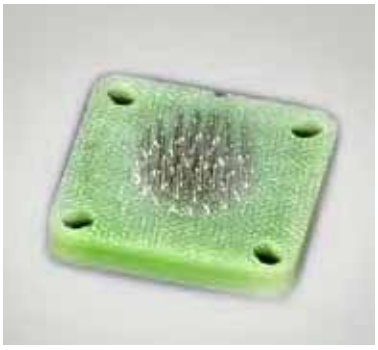

Headers provide easy separation of the connector from the PC board.

Termination of PC tail connectors to a flex print or a printed circuit board represents a major cost in the manufacturing process for users. When adding flex or printed circuit board assemblies to an expensive filter or filter/transient protection connector, the total cost of a failed solder joint, a bent pin, or an unanticipated electrical failure becomes prohibitive. The universal header assembly from Amphenol provides for easy separation of the connector from the board on these occasions. The header assembly is comprised of a short pin/socket contact. The tail end of the contact is soldered to the through hole of the flex or printed circuit board. The socket is embedded in the insulator, making electrical contact with the printed circuit tail of the connector.

Header Assemblies Provide Cost Savings

Incorporation of the header assembly provides the user with time and cost saving potentials. These header assemblies can be vapor phase or wave soldered to flex or printed circuit boards prior to the receipt of the EMI/EMP connector. Headers can be installed to standard connectors, allowing for electrical testing that would adversely affect the sensitive diodes, MOV's or capacitors in the EMI/EMP connectors. Expensive connector assemblies can be easily removed from and reattached to the header assembly as the manufacturing process dictates.

Mounting Applications

Shell modifications are recommended, but are not necessary. The header assembly can be attached to connectors with standard flange placement or directly to the circuit board. The ideal application would involve either a single flange moved all the way to the rear of the connector or a double flange. Cinch nuts can be installed in either flange to allow easier mounting to the panel or the header assembly. The forward flange would mount the connector to the panel; the rear flange would be used to mount the header assembly. Various types of captivated or loose attaching screws can be utilized for unique applications.

Amphenol universal headers are slotted to allow mounting to all series of MIL-DTL-38999 or MIL-DTL-26482* connectors without special alterations. They are of similar dimension as the flange of the mounting connector and are approximately .185 inches (4.70 mm) thick.

* For information on Header Assemblies for MIL-DTL-26482 connector consult Amphenol, Sidney NY.

Cylindrical Configuration

- 3 PCB stickout dimensions are available.
- Size 22 contacts use .175 thick headers
- Size 16 to 20 contacts use .195 thick headers
- Consult Amphenol, Sidney NY for additional configurations.
- Headers for cylindrical connectors accommodate up to 128 pins. For MIL-DTL-38999 insert arrangements chart see pages 4-7 and insert drawings on pages 8-14.

Mounting to Rectangular ARINC Connectors

- Headers for ARINC connector arrangements accommodate up to 150 pins
- Consult Amphenol, Sidney, NY for ARINC configurations and detailed dimensions.

Materials

- Body is molded or machined from FR-4.
- Electrical engagement areas of the header contact are plated with .00003 inches minimum of gold over .00005 inches minimum of nickel.

See drawing of standard header on next page.

Universal "Header Assembly" for Flex Print or PC Board Connectors

Amphenol Aerospace

Series III TV | Series II JT | Series I LJT

The drawing below shows the standard header assembly for use with MIL-DTL-38999 connectors. Consult Amphenol Aerospace, Sidney NY for drawings of headers for ARINC configurations.

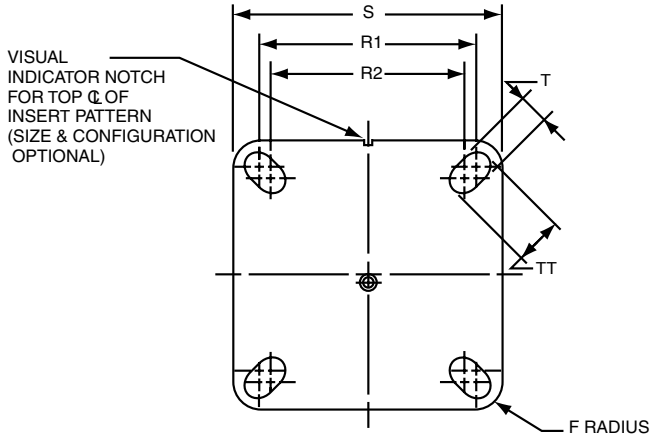

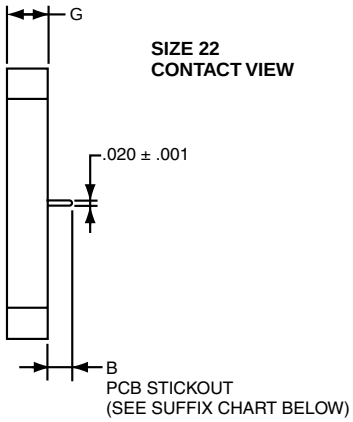

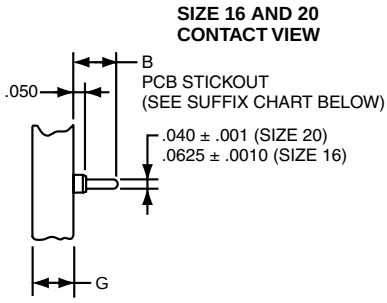

Assembly Part Number	Shell Size	F Radius	G ± .005	S ± .005	T + .008 – .006	R1 TP†	R2 TP†	TT + .008 – .006
21-904008-XX( )	8/9	.094		.938	.128	.719	.594	.216
21-904010-XX( )	10/11	.094		1.031	.128	.812	.719	.194
21-904012-XX( )	12/13	.094		1.125	.128	.906	.812	.194
21-904014-XX( )	14/15	.125		1.219	.128	.969	.906	.173
21-904016-XX( )	16/17	.125		1.312	.128	1.062	.969	.194
21-904018-XX( )	18/19	.125		1.438	.128	1.156	1.062	.194
21-904020-XX( )	20/21	.125		1.562	.128	1.250	1.156	.194
21-904022-XX( )	22/23	.125		1.688	.154	1.375	1.250	.242
21-904024-XX( )	24/25	.125		1.812	.154	1.500	1.375	.242

See Suffix Chart

Assemblies containing Size 22 contacts only: .175
Assemblies containing Size16 or 20 contacts: .195

† TP designates true position dimensioning.

NOTE:
Size 22 accepts .018 to .022 dia. PCB tails.
Size 16 accepts .048 to .064 dia. PCB tails.
Size 20 accepts .037 to .043 dia. PCB tails.

HOW TO ORDER INFORMATION

For Header Assembly with MIL-DTL-38999 Connectors

Use coded number as follows:

21-9040 XX - XX X

Designates Amphenol Header Assembly

Shell size designation for MIL-DTL-38999 Series I, II, III and IV see Suffix chart.

Arrangement number - See MIL-STD-1560 or MIL-STD-1669. See insert availability charts on pages 4-7.

Contact PCB Stickout designation See Suffix chart.

For how to order information on adapters to be used with ARINC connectors, consult Amphenol, Sidney NY.

ASSEMBLY NUMBER SUFFIX CHART

Shell Size Designation*	Arrangement Number Suffix***	Contact PCB Stickout**	
		Suffix	B ± .015 Stickout
08	Insert Arrangement Suffix from MIL-STD-1560 or MIL-STD-1669	1	.120
10		2	.185
12		3	.270
14			
16			
18			
20			
22			
24			

*Shell size designation for MIL-DTL-38999 Series I, II, III and IV and MIL-DTL-26482 Series 1 and 2.
Examples: Shell size 9 use 08. Shell size 25 use 24.

** Size 22 contacts available in all 3 stickout lengths.
Size 16 and 20 contacts available only in .185 and .270 lengths.

*** Insert arrangement 14-97 and 15-97 are not available at this time. Consult Amphenol, Sidney NY for information.

Series III TV | **Series II JT** | **Series I LJT** | **SJT**

The following data includes information pertaining to the application tools which have been established for crimping, inserting, and removing contacts incorporated in the TV, CTV and MIL-DTL-38999 Series III connectors. For additional information on coax, twinax and triax contact tools see High Speed Contact section of this catalog. All crimping tools included are the "full cycling" type and when used as specified in the installation instructions (L-624 and L-844) covering the TV, CTV and MS series connectors, will provide reliable crimped wire to contact terminations. There is a possibility of additional crimping tools other than those included being available at present or in the future for this specific application.

CRIMPING TOOLS

Contact Size/Type	Crimping Tool	Turret Die or Positioner
12 Pin and Socket	M22520/1-01	M22520/1-04
16 Pin and Socket	M22520/1-01 M22520/7-01	M22520/1-04 M22520/7-04
20 Pin and Socket	M22520/1-01 M22520/2-01 M22520/7-01	M22520/1-04 M22520/2-10 M22520/7-08
22, 22D, 22M Pin	M22520/2-01 M22520/7-01	M22520/2-09 M22520/7-07
22, 22D, 22M Socket Series I, III	M22520/2-01 M22520/7-01	M22520/2-07 M22520/7-05
22D Socket Series II	M22520/2-01 M22520/7-01	M22520/2-06 M22520/7-06
8 Twinax Center Pin and Socket	M22520/2-01	M22520/2-37
8 Twinax Intermediate Outer Pin & Socket	M22520/5-01	M22520/5-200

Where 2 or 3 tools are listed for a contact size, only one tool and its die or positioner are required to crimp the contact. The above crimping tools and positioners are available from the approved tool manufacturer.

Contact Size/Type	Crimping Tool	Turret Die or Positioner
8 Coaxial Inner Pin and Socket	M22520/2-01	M22520/2-31
8 Coaxial Outer Pin and Socket	M22520/5-01	M22520/5-05 Die Closure B
	M22520/5-01	M22520/5-41 Die Closure B
	M22520/10-01	M22520/10-07 Die Closure B
16 Coaxial Inner Pin and Socket	M22520/2-01	M22520/2-35
16 Coaxial Outer Pin and Socket	M22520/4-01	M22520/4-02
12 Coaxial Inner Pin and Socket	M22520/2-01	M22520/2-34
12 Coaxial Outer Pin and Socket	M22520/31-01	M22520/31-02
10 (Power)	TP-201423	

INSERTION TOOLS

Use with Contact Size	Plastic Tools		Metal Tools			
			Angle Type		Straight Type	
	MS Part Number	Color	MS Part No.	Commercial Part No.	Commercial Part No.	Color
10 (Power	M81969/14-05*	Gray / (White)	M81969/8-11	†	†	Green
12	M81969/14-04*	Yellow / (White)	M81969/8-09	11-8674-12	11-8794-12	Yellow
16	M81969/14-03*	Blue / (White)	M81969/8-07	11-8674-16	11-8794-16	Blue
20	M81969/14-10*	Red / (Orange)	M81969/8-05	11-8674-20	11-8794-20	Red
22	M81969/14-09	Brown/White	M81969/8-03	11-8674-22	11-8794-22	Brown
22D, 22M	M81969/14-01*	Green / (White)	M81969/8-01	11-8674-24	11-8794-24	Black
8 Coaxial	None Required					
8 Twinax	None		M81969/46-06**	None		Red

REMOVAL TOOLS

Use with Contact Size	Plastic Tools		Metal Tools				
				Angle Type		Straight Type	
	MS Part Number	Color	For Unwired Contacts Commercial Part No.	MS Part No.	Commercial Part No.	Commercial Part No.	Color
10 (Power)	M81969/14-05*	(Gray) / White	†	M81969/8-12	†	†	Green / White
12	M81969/14-04*	(Yellow) / White	11-10050-11	M81969/8-10	11-8675-12	11-8795-12	Yellow / White
16	M81969/14-03*	(Blue) / White	11-10050-10	M81969/8-08	11-8675-16	11-8795-16	Blue / White
20	M81969/14-10*	(Orange) / Red	11-10050-9	M81969/8-06	11-8675-20	11-8795-20	Red / Orange
22	M81969/14-09*	(Brown)/White	11-10050-8	M81969/8-04	11-8675-22	11-8795-22	Brown/White
22D, 22M	M81969/14-01*	(Green) / White	11-10050-7	M81969/8-02	11-8675-24	11-8795-24	Green / White
8 Coaxial	M81969/14-12	Green	None	None	11-9170	DRK264-8††	N/A
8 Twinax	M81969/14-12	Green	None	M81969/46-12**	11-9170	N/A	N/A

The M81969/8, 11-8674, 11-8675, and 11-8794 metal contact insertion and removal tools will accommodate wires having the maximum outside diameter as follows: Contact size 12: dia. is .155, size 16: dia. is .109, size 20: dia. is .077, size 22D: dia. is .050. When wire diameters exceed those specified, the plastic tools must be used.

* Double end insertion/removal tool.
** Twinax insertion tools are available only in a straight type, metal version.

† To be determined.
†† Contact Daniels Manufacturing Co. for availability.