This document is the property of Amphenol Corporation and is delivered on the express condition that it is not to be disclosed, reproduced or used, in whole or in part, for manufacture or sale by anyone other than Amphenol Corporation without its prior concert, & that no right is granted to disclose or to use any information in this document.

REVISIONS				
SYM	ECN	DESCRIPTION	DATE	APPROVED
1			02/10/10	

D-SUB TECHNICAL DATA

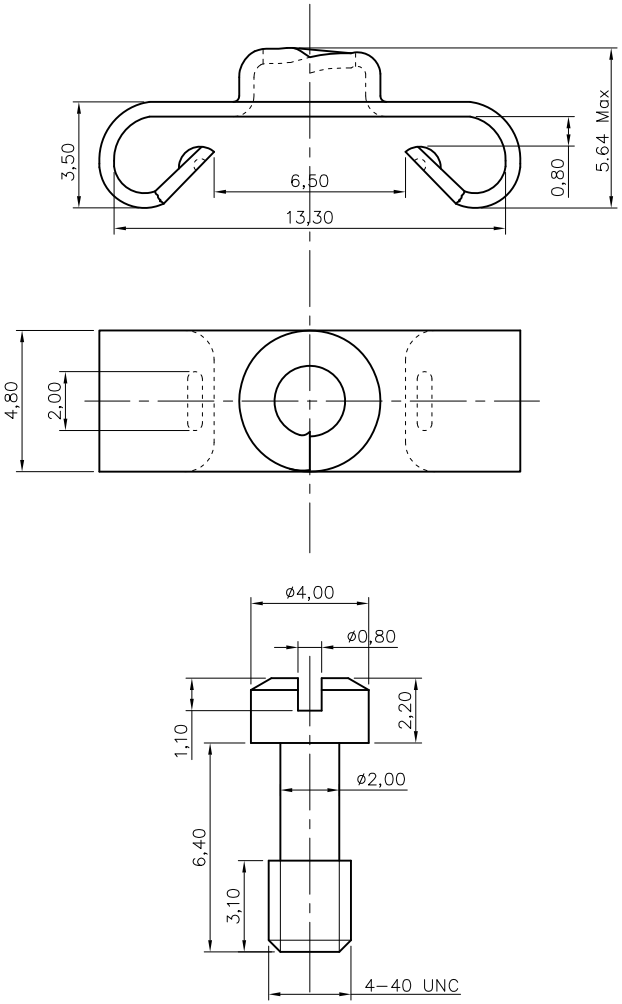

MATERIAL : Steel 100u" min tin over 50u" min nickel

PACKAGE : Delivered separately

1 P/N : 10 sets

MARKING : Amphenol-...(Series No.)

Commercial reference

Manufacturing date

PRODUCT CODE

L 17D2041902X

- L: RoHS Compliance
- X=10 lockings

Amphenol Shenzhen RoHS Compliant EU2002/95/EC

Customer drawing

UNLESS OTHERWISE SPECIFIED TOLERANCES	U.S.	METRIC
.X +/-		0.50
.XX +/-		0.30
.XXX +/-		0.20
FRACTIONS +/-		
ANGLES +/-		2°

FOR MATERIALS AND FINISHES SEE NOTES

REMOVE SHARP EDGES

DIMENSIONS U.S. INCHES / METRIC MM

	APPROVAL	DATE
DRAWN	Mary Ma	02/10/10
CHECKED	Vik.wang	02/10/10
CHECKED		

DRAWING FILE :

ANGLE OF PROJECTION

Amphenol®

TITLE: Lock Accessory

SIZE	DRAWING NO.	REV.
A4	C L17D2041902X	1

SCALE NONE SHEET 1 OF 1