9-1617351-9 ✔ ACTIVE

CII

TE Internal #: 9-1617351-9

General Purpose Signal Relay, DC, Non-Polarized, Monostable, 2 Form C DPDT-CO, 1 A Contact Rating, 12 VDC Coil Voltage, .369 W Coil Power, Board Mount

View on TE.com >

Relays & Contactors > Electromechanical Relays



Relay & Contactor Type: **General Purpose Signal Relay**

Coil Magnetic System: **Non-Polarized, Monostable**

Contact Arrangement: **2 Form C DPDT-CO**

Current Type: **DC**

Contact Current Rating: **1 A**

Features

Product Type Features

Relay & Contactor Type	General Purpose Signal Relay

Configuration Features

Coil Special Features	Coil Suppression Diode
Pin Configuration	.2" x .3" Spreader Pad
Contact Arrangement	2 Form C DPDT-CO

Electrical Characteristics

Coil Resistance	390 Ω
Contact Switching Voltage (Max)	28 VDC
Contact Current Rating	1 A
Coil Voltage Rating	12 VDC
Coil Power Rating DC	.369 W

Body Features

Enclosure Type	Hermetically Sealed

Termination Features

Main Termination & Connection Type	Extended Leads
Coil Termination & Connection Type	Extended Leads

Mechanical Attachment

Product Mount Type	Board Mount

Usage Conditions

Operating Temperature Range	-65 – 125 °C
Environmental Ambient Temperature (Max)	125 °C[257 °F]

Operation/Application

Vibration Resistance	30G's, 10 – 3000Hz
Shock Resistance	75G's, 6ms
Coil Magnetic System	Non-Polarized, Monostable
Current Type	DC

Other

Contact Current Class	≤2 A
Coil Power Rating Class	>.3 – ≤.6 W

Product Compliance

For compliance documentation, visit the product page on TE.com>

EU RoHS Directive 2011/65/EU	Not Compliant
EU ELV Directive 2000/53/EC	Not Compliant
China RoHS 2 Directive MIIT Order No 32, 2016	有害物质含量超出标准 Restricted Substance(s) Above Threshold
EU REACH Regulation (EC) No. 1907/2006	Current ECHA Candidate List: JUNE 2025 (250) Candidate List Declared Against: JAN 2022 (223) Does not contain REACH SVHC
Halogen Content	Low Halogen - Br, Cl, F < 900 ppm per homogenous material. Also BFR/CFR/PVC Free
Solder Process Capability	Not lead free process capable

Product Compliance Disclaimer

This information is provided based on reasonable inquiry of our suppliers and represents our current actual knowledge based on the information they provided. This information is subject to change. The part numbers that TE has identified as EU RoHS compliant have a maximum concentration of 0.1% by weight in homogenous materials for lead, hexavalent chromium, mercury, PBB, PBDE, DBP, BBP, DEHP, DIBP, and 0.01% for cadmium, or qualify for an exemption to these limits as defined in the Annexes of Directive 2011/65/EU (RoHS2). Finished electrical and electronic equipment products will be CE marked as required by Directive 2011/65/EU. Components may not be CE marked. Additionally, the part numbers that TE has identified as EU ELV compliant have a maximum concentration of 0.1% by weight in homogenous materials for lead, hexavalent chromium, and mercury, and 0.01% for cadmium, or qualify for an exemption to these limits as defined in the Annexes of Directive 2000/53/EC (ELV). Regarding the REACH Regulation, the information TE provides

on SVHC in articles for this part number is based on the latest European Chemicals Agency (ECHA) 'Guidance on requirements for substances in articles' posted at this URL: https://echa.europa.eu/guidance-documents/guidance-on-reach

Compatible Parts



TE Part # 2-1617031-1
HFW1201K45M = M39016/6-109M

Customers Also Bought

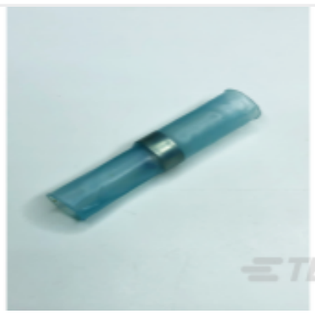

TE Part #624036-000
D-100-34



TE Part #2562-201-2031L
CONT SOC ASSY



TE Part #CAT-HST-ATUM2
ATUM 3:1 Heat Shrink Tubing

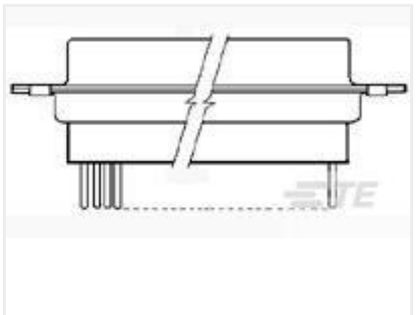

TE Part #208868-1
PLUG ASSY,44 POSN,AMPLIMITE

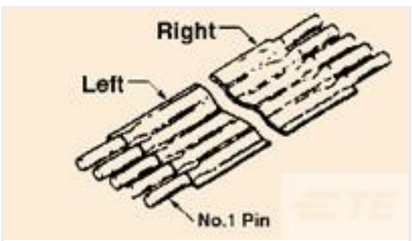

TE Part #5-1437187-8
FST-22A-12



TE Part #1-1617122-0
JMACD-26XLS = M39016/15-105L



TE Part #1617147-1
JMGAP-12L = M39016/17-028L



TE Part #2418212-1
FNG Cord 2.0mm x 10m L

Documents

CAD Files

3D PDF

3D

Customer View Model
ENG_CVM_CVM_9-1617351-9_O.2d_dxf.zip

English

Customer View Model
ENG_CVM_CVM_9-1617351-9_O.3d_igs.zip

English

Customer View Model
ENG_CVM_CVM_9-1617351-9_O.3d_stp.zip

English

By downloading the CAD file I accept and agree to the **Terms and Conditions** of use.

Datasheets & Catalog Pages

5-1773450-5_sec1_MA

English