J1MSPD-12XL ✔ ACTIVE

CII | CII J1MSD Relay

TE Internal #: 4-1617119-7

General Purpose Signal Relay, DC, Non-Polarized, Monostable, 1 Form C SPDT-CO, 1 A Contact Rating, 12 VDC Coil Voltage, CII J1MSD Relay

View on TE.com >

Relays & Contactors > Electromechanical Relays



Relay & Contactor Type: **General Purpose Signal Relay**

Coil Magnetic System: **Non-Polarized, Monostable**

Contact Arrangement: **1 Form C SPDT-CO**

Current Type: **DC**

Contact Current Rating: **1 A**

Features

Product Type Features

Relay & Contactor Type	General Purpose Signal Relay

Configuration Features

Coil Special Features	Coil Polarity Protection Diode, Coil Suppression Diode
Contact Arrangement	1 Form C SPDT-CO

Electrical Characteristics

Coil Resistance	1025 Ω
Contact Switching Voltage (Max)	28 VDC
Contact Current Rating	1 A
Coil Voltage Rating	12 VDC
Coil Power Rating DC	.14 W

Body Features

Enclosure Type	Hermetically Sealed

Termination Features

Main Termination & Connection Type	Extended Leads
Coil Termination & Connection Type	Extended Leads

Mechanical Attachment

Product Mount Type	Board Mount

Usage Conditions

Operating Temperature Range	-65 – 125 °C
Environmental Ambient Temperature (Max)	125 °C[257 °F]

Operation/Application

Vibration Resistance	30G's, 10 – 3000Hz
Shock Resistance	75G's, 6ms
Coil Magnetic System	Non-Polarized, Monostable
Current Type	DC

Other

Contact Current Class	≤2 A
Coil Power Rating Class	≤.15 W

Product Compliance

For compliance documentation, visit the product page on TE.com>

EU RoHS Directive 2011/65/EU	Not Compliant
EU ELV Directive 2000/53/EC	Not Compliant
China RoHS 2 Directive MIIT Order No 32, 2016	有害物质含量超出标准 Restricted Substance(s) Above Threshold
EU REACH Regulation (EC) No. 1907/2006	Current ECHA Candidate List: JUNE 2025 (250) Candidate List Declared Against: JAN 2022 (223) Does not contain REACH SVHC
Halogen Content	Low Halogen - Br, Cl, F < 900 ppm per homogenous material. Also BFR/CFR/PVC Free
Solder Process Capability	Not lead free process capable

Product Compliance Disclaimer

This information is provided based on reasonable inquiry of our suppliers and represents our current actual knowledge based on the information they provided. This information is subject to change. The part numbers that TE has identified as EU RoHS compliant have a maximum concentration of 0.1% by weight in homogenous materials for lead, hexavalent chromium, mercury, PBB, PBDE, DBP, BBP, DEHP, DIBP, and 0.01% for cadmium, or qualify for an exemption to these limits as defined in the Annexes of Directive 2011/65/EU (RoHS2). Finished electrical and electronic equipment products will be CE marked as required by Directive 2011/65/EU. Components may not be CE marked. Additionally, the part numbers that TE has identified as EU ELV compliant have a maximum concentration of 0.1% by weight in homogenous materials for lead, hexavalent chromium, and mercury, and 0.01% for cadmium, or qualify for an exemption to these limits as defined in the Annexes of Directive 2000/53/EC (ELV). Regarding the REACH Regulation, the information TE provides

on SVHC in articles for this part number is based on the latest European Chemicals Agency (ECHA) 'Guidance on requirements for substances in articles' posted at this URL: https://echa.europa.eu/guidance-documents/guidance-on-reach

Compatible Parts



TE Part # 2-1617031-0
HFW1201K45 = M39016/6-109L

Also in the Series | CII J1MSD Relay



PCB Relays(9)

Customers Also Bought



TE Part #CAT-D48-ST273
DEUTSCH Connector Solid Contacts



TE Part #CAT-D487-W416
Wedgelocks: DEUTSCH DT



TE Part #DT06-2S
PLG, 2P, GRY, N



TE Part #DT04-2P
REC, 2P, GRY, N



TE Part #114017-ZZ
SEALING PLUG, SIZE 12/16, WHT

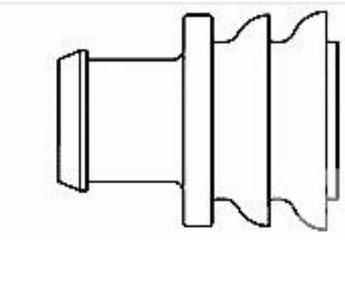

TE Part #281934-2
SINGLE WIRE SEAL



TE Part #CAT-AM71-CH8172
AMP SUPERSEAL 1.5MM, CONNECTOR HOUSING

Documents

CAD Files

3D PDF

3D

Customer View Model

ENG_CVM_CVM_4-1617119-7_O.2d_dxf.zip

English

Customer View Model

ENG_CVM_CVM_4-1617119-7_O.3d_igs.zip

English

Customer View Model

ENG_CVM_CVM_4-1617119-7_O.3d_stp.zip

English

By downloading the CAD file I accept and agree to the Terms and Conditions of use.

Datasheets & Catalog Pages

5-1773450-5_sec1_1MS

English