IHS series

Hall effect pushbutton switches • bushing Ø 12 mm • momentary

DISTINCTIVE FEATURES

Momentary pushbutton (NO)
5 million cycles
Low behind-panel depth
Standard and high actuator
Sealed to IP67

ENVIRONMENTAL SPECIFICATIONS

- Front panel sealing : IP67 according to IEC 60529
- Operating temperature : -40 °C to +85 °C (-40 °F to +185 °F)

ELECTRICAL SPECIFICATIONS

- Supply voltage : 3.5 VDC to 24 VDC
- Supply current : VDC = 12 V : 2.5 mA Typ. to 5 mA max. (current consumption in OFF position)
- Max. output current : 50 mA
- Max. output voltage : 24 VDC
- Output type : NPN

GENERAL SPECIFICATIONS

- Panel thickness : 1.5 mm (.059) min. - 4 mm (.157) max.
- Total travel : 1.80 mm (.070) ± 0.3 mm
- Typical operating force : 6 N ± 2 N
- Mechanical life : 5 million cycles
- Torque : 1.5 Nm max. applied to nut

MATERIALS

- Case : PBT, UL94-V0
- Actuator : polyamide 6/6
- Bushing/bezel : zinc die-cast (zamac), black painted
- Multi-wire leads : AWG26, 150 mm

The company reserves the right to change specifications without notice.

IHS series

Hall effect pushbutton switches • bushing Ø 12 mm • momentary

ELECTRICAL FUNCTIONS

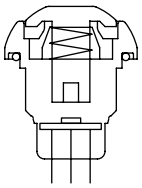

Function **3** (NO)

WIRING DIAGRAM

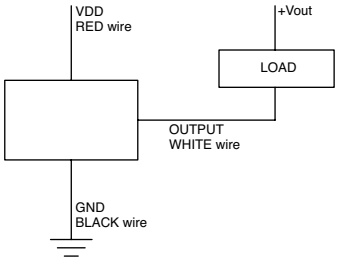

MOUNTING

PANEL CUT-OUT

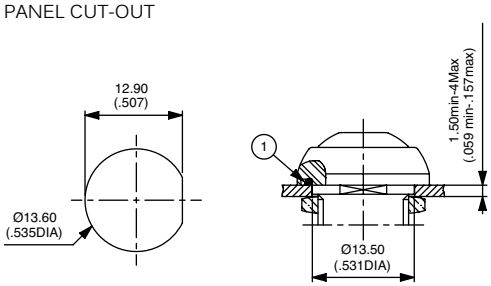

① - O-ring

MATRIX MOUNTING

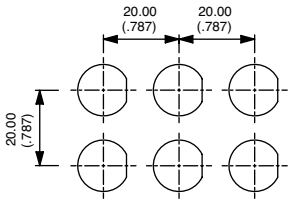

BACK OF PANEL SPACE REQUIREMENT

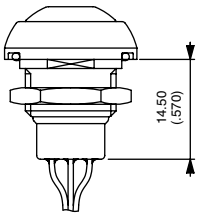

IHS series

Hall effect pushbutton switches • bushing Ø 12 mm • momentary

BUILD YOUR PART NUMBER

BASIC PART NUMBER

SERIES	ACTUATOR SHAPE	ELECTRICAL FUNCTION	OPERATING FORCE	TERMINALS
IHS	R Round H Round, high	3 Normally open (NO)	6 6 N	F Flying leads

OPTIONS

ACTUATOR COLORS	OPTIONS
1 Blue	Blank None
B Dark blue	100 Satin chrome bezel
2 Black	101 Bright chrome bezel
3 Green	
4 Grey	
5 Yellow	
6 Red	
7 White	
9 Orange	

ABOUT THIS SERIES

On the following pages, you will find successively basic part numbers of switches and options in the same order as in above chart.

Notice : please note that not all combinations of above numbers are available. Refer to the following pages for further information.

A sealing boot is available to protect the switches against frost and sand (P/N U5125). See "Sealing Boots" section of website.

Mounting accessories : Standard hardware supplied : 1 hex nut 14 mm (.551) across flats and 1 O-Ring. Hex nut part number U166.

IHS series

Hall effect pushbutton switches • bushing Ø 12 mm • momentary

STANDARD ACTUATOR

IHSR36F — Normally Open

→ FLAT

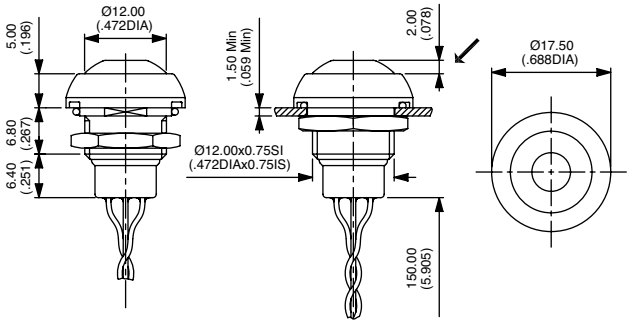

HIGH ACTUATOR

IHSH36F — Normally Open

→ FLAT

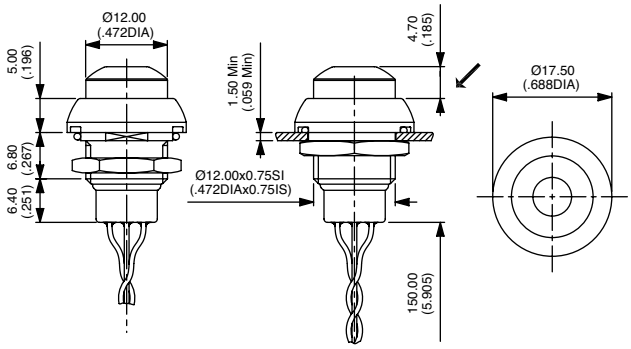

ACTUATOR COLORS

BASIC P/N ..... ☐ ..... ☐

1	Blue
B	Dark blue
2	Black
3	Green
4	Grey
5	Yellow
6	Red
7	White
9	Orange

OPTIONS

BASIC P/N ..... ☐ ..... ☐

100	Satin chrome bezel
101	Bright chrome bezel